UCx84x Current-Mode PWM Controllers

1 Features

- Optimized for off-line and DC-to-DC converters
- Low start-up current (< 1mA)
- Automatic feedforward compensation
- Pulse-by-pulse current limiting
- Enhanced load-response characteristics
- Undervoltage lockout with hysteresis
- Double-pulse suppression
- High-current totem-pole output
- Internally trimmed bandgap reference
- Up to 500kHz operation
- Error amplifier with low output resistance

2 Applications

- Switching regulators of any polarity
- Transformer-coupled DC-DC converters

3 Description

The UCx84x series of control integrated circuits provide the features that are necessary to implement off-line or DC-to-DC fixed-frequency current-mode control schemes, with a minimum number of external components. The internally implemented circuits include an undervoltage lockout (UVLO), featuring a start-up current of less than 1mA, and a precision reference trimmed for accuracy at the error amplifier input. Other internal circuits include logic to provide latched operation, a pulse-width modulation (PWM) comparator that also provides current-limit control, and a totem-pole output stage that is designed to source or sink high-peak current. The output stage, designed for driving N-channel MOSFETs, is low when the output stage is in the off state.

The UCx84x family offers a variety of package options, temperature range options, choice of maximum duty cycle, and choice of turnon and turnoff thresholds and hysteresis ranges. Devices with higher turnon or turnoff hysteresis are good choices for off-line power supplies, while the devices with a narrower hysteresis range are designed for DC-DC applications. The UC184x devices are specified for operation from –55°C to 125°C, the UC284x series is specified for operation from –40°C to 85°C, and the UC384x series is specified for operation from 0°C to 70°C.

Package Information

PART NUMBER	PACKAGE (1)	PACKAGE SIZE(2)
UC184x	JG (CDIP, 8)	7.62mm × 6.67mm
	FK (LCCC, 20)	8.89mm × 8.89mm
	W (CFP, 14)	9.21mm × 6.3mm
UC284x	D (SOIC, 8)	4.90mm × 6.00mm
	D (SOIC, 14)	8.65mm × 6.00mm
	P (PDIP, 8)	9.81mm × 9.43mm
UC384x	D (SOIC, 8)	4.90mm × 6.00mm
	D (SOIC, 14)	8.65mm × 6.00mm
	P (PDIP, 8)	9.81mm × 9.43mm

(1) For all available packages, see Section 11.
(2) The package size (length × width) is a nominal value and includes pins, where applicable.

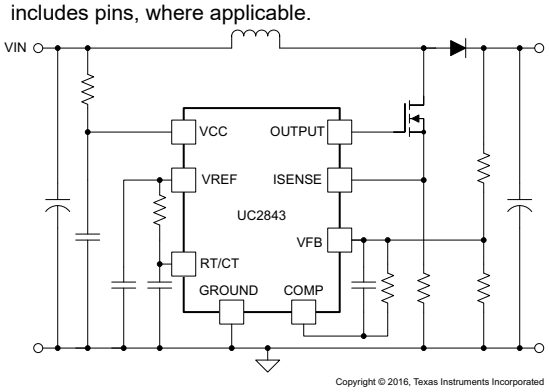

Simplified Application

An IMPORTANT NOTICE at the end of this data sheet addresses availability, warranty, changes, use in safety-critical applications, intellectual property matters and other important disclaimers. PRODUCTION DATA.

Table of Contents

1 Features....1
2 Applications....1
3 Description....1
4 Device Comparison Table....3
5 Pin Configuration and Functions....3
6 Specifications....6
6.1 Absolute Maximum Ratings....6
6.2 ESD Ratings....6
6.3 Recommended Operating Conditions....6
6.4 Thermal Information....6
6.5 Electrical Characteristics....7
6.6 Typical Characteristics....9
7 Detailed Description....11
7.1 Overview....11
7.2 Functional Block Diagrams....11
7.3 Feature Description....12
7.4 Device Functional Modes....20
8 Application and Implementation....21
8.1 Application Information....21
8.2 Typical Application....22
8.3 Power Supply Recommendations....34
8.4 Layout....34
9 Device and Documentation Support....37
9.1 Receiving Notification of Documentation Updates....37
9.2 Support Resources....37
9.3 Trademarks....37
9.4 Electrostatic Discharge Caution....37
9.5 Glossary....37
10 Revision History....37
11 Mechanical, Packaging, and Orderable Information....38

Copyright © 2024 Texas Instruments Incorporated

4 Device Comparison Table

UVLO		TEMPERATURE RANGE	MAX DUTY CYCLE
TURNON AT 16 V TURNOFF AT 10 V SUITABLE FOR OFF-LINE APPLICATIONS	TURNON AT 8.4 V TURNOFF AT 7.6 V SUITABLE FOR DC-DC APPLICATIONS		
UC1842	UC1843	–55°C to 125°C	Up to 100%
UC2842	UC2843	–40°C to 85°C	
UC3842	UC3843	0°C to 70°C	
UC1844	UC1845	–55°C to 125°C	Up to 50%
UC2844	UC2845	–40°C to 85°C	
UC3844	UC3845	0°C to 70°C	

5 Pin Configuration and Functions

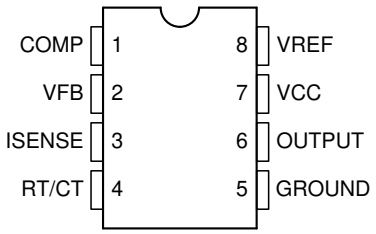

Figure 5-1. D, JG, and P Packages 8-Pin SOIC, CDIP, and PDIP Top View

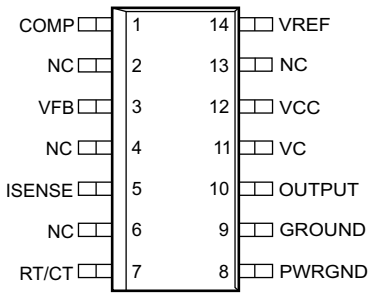

Figure 5-2. D and W Packages 14-Pin SOIC and CFP Top View

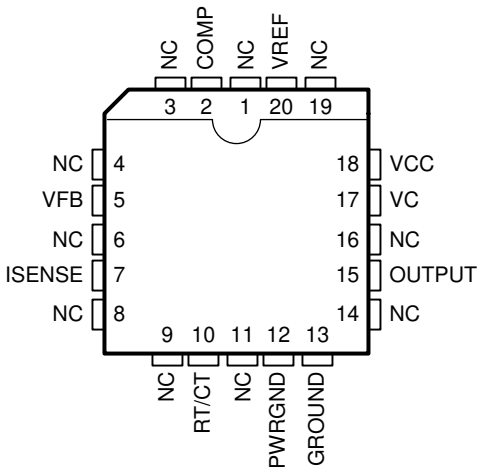

Figure 5-3. FK Package 20-Pin LCCC Top View

Table 5-1. Pin Functions

PIN				TYPE[1]	DESCRIPTION
NAME	SOIC, CDIP, PDIP (8)	SOIC, CFP (14)	LCCC (20)		
COMP	1	1	2	O	Error amplifier compensation pin. Connect external compensation components to this pin to modify the error amplifier output. The error amplifier is internally current-limited so the user can command zero duty cycle by externally forcing COMP to GROUND.
GROUND	5	9	13	G	Analog ground. For device packages without PWRGND, GROUND functions as both power ground and analog ground.
PWRGND	—	8	12	G	Power ground. For device packages without PWRGND, GROUND functions as both power ground and analog ground
ISENSE	3	5	7	I	Primary-side current sense pin. Connect to current sensing resistor. The PWM uses this signal to terminate the OUTPUT switch conduction. A voltage ramp can be applied to this pin to run the device with a voltage-mode control configuration.
NC	—	2, 4, 6, 13	1, 3, 4, 6, 8, 9, 11, 14, 16, 19	—	Do not connect
OUTPUT	6	10	15	O	OUTPUT is the gate drive for the external MOSFET. OUTPUT is the output of the on-chip driver stage intended to directly drive a MOSFET. Peak currents of up to 1 A are sourced and sunk by this pin. OUTPUT is actively held low when VCC is below the turnon threshold.
RT/CT	4	7	10	I/O	Fixed frequency oscillator set point. Connect timing resistor, R_{RT}, to VREF and timing capacitor, C_{CT}, to GROUND from this pin to set the switching frequency. For best performance, keep the timing capacitor lead to the device GROUND as short and direct as possible. If possible, use separate ground traces for the timing capacitor and all other functions. The frequency of the oscillator can be estimated with the following equations: $f_{OSC} = \frac{1.72}{R_{RT} \times C_{CT}}$ (1) where f_{OSC} is in Hertz, R_{RT} is in Ohms and C_{CT} is in Farads. Never use a timing resistor less than 5 kΩ. The frequency of the OUTPUT gate drive of the UCx842 and UCx843, f_{SW}, is equal to f_{OSC} at up to 100% duty cycle; the frequency of the UCx844 and UCx845 is equal to half of the f_{OSC} frequency at up to 50% duty cycle.
VC	—	11	17	I	Bias supply input for the output gate drive. For PWM controllers that do not have this pin, the gate driver is biased from the VCC pin. VC must have a bypass capacitor at least 10 times greater than the gate capacitance of the main switching FET used in the design.
VCC	7	12	18	I	Analog controller bias input that provides power to the device. Total VCC current is the sum of the quiescent VCC current and the average OUTPUT current. Knowing the switching frequency and the MOSFET gate charge, Q_g, the average OUTPUT current can be calculated from: $I_{OUTPUT} = Q_g \times f_{SW}$ (2) A bypass capacitor, typically 0.1 µF, connected directly to GROUND with minimal trace length, is required on this pin. An additional bypass capacitor at least 10 times greater than the gate capacitance of the main switching FET used in the design is also required on VCC.

Copyright © 2024 Texas Instruments Incorporated

Table 5-1. Pin Functions (continued)

PIN				TYPE[(1)]	DESCRIPTION
NAME	SOIC, CDIP, PDIP (8)	SOIC, CFP (14)	LCCC (20)		
VFB	2	3	5	I	Inverting input to the internal error amplifier. VFB is used to control the power converter voltage-feedback loop for stability.
VREF	8	14	20	O	5-V reference voltage. VREF is used to provide charging current to the oscillator timing capacitor through the timing resistor. Bypassing VREF to GROUND with a ceramic capacitor connected as close to the pin as possible is important for reference stability. A minimum value of 0.1-µF ceramic is required. Additional VREF bypassing is required for external loads on VREF.

(1) I = Input, O = Output, G = GND

Copyright © 2024 Texas Instruments Incorporated

6 Specifications

6.1 Absolute Maximum Ratings

over operating free-air temperature range (unless otherwise noted)[1]

		MIN	MAX	UNIT
V_{VCC}	Low impedance source		30	V
	I_{VCC} < 30 mA	Self Limiting		
V_{VFB} and V_{ISENSE}	Analog input voltage	–0.3	6.3	V
V_{VC}	Input Voltage, Q and D Package only		30	V
I_{OUTPUT}	Output drive current		±1	A
I_{COMP}	Error amplifier output sink current		10	mA
E_{OUTPUT}	Output energy (capacitive load)		5	µJ
T_J	Junction temperature		150	°C
T_{stg}	Storage temperature	–65	150	°C

(1) Operation outside the *Absolute Maximum Ratings* may cause permanent device damage. *Absolute Maximum Ratings* do not imply functional operation of the device at these or any other conditions beyond those listed under *Recommended Operating Conditions*. If used outside the *Recommended Operating Conditions* but within the *Absolute Maximum Ratings*, the device may not be fully functional, and this may affect device reliability, functionality, performance, and shorten the device lifetime.

6.2 ESD Ratings

			VALUE	UNIT
$V_{(ESD)}$	Electrostatic discharge	Human body model (HBM), per ANSI/ESDA/JEDEC JS-001, all pins[1]	±3000	V
		Charged device model (CDM), per JEDEC specification JESD22-C101, all pins[2]	±2000	

(1) JEDEC document JEP155 states that 500-V HBM allows safe manufacturing with a standard ESD control process.
(2) JEDEC document JEP157 states that 250-V CDM allows safe manufacturing with a standard ESD control process.

6.3 Recommended Operating Conditions

over operating free-air temperature range (unless otherwise noted)

			MIN	TYP	MAX	UNIT
V_{VCC} and V_{VC} [1]	Supply voltage		12		28	V
V_{VFB}	Input voltage				2.5	V
V_{ISENSE}	Input voltage				1	V
I_{VCC}	Supply current, externally limited				25	mA
I_{OUTPUT}	Average output current				200	mA
I_{VREF}	Reference output current				–20	mA
f_{OSC}	Oscillator frequency			100	500	kHz
T_A	Operating free-air temperature	UC184x	–55		125	°C
		UC284x	–40		85	
		UC384x	0		70	

(1) These recommended voltages for VC and POWER GROUND apply only to the D package.

6.4 Thermal Information

THERMAL METRIC[1]		UCx84x				UNIT
		D (SOIC)	D (SOIC)	P (PDIP)	FK (LCCC)	
		8 PINS	14 PINS	8 PINS	20 PINS	
$R_{\theta JA}$	Junction-to-ambient thermal resistance	117.4	87.9	74.1	—	°C/W
$R_{\theta JC(top)}$	Junction-to-case (top) thermal resistance	51.5	42.2	63.4	36.2	°C/W
$R_{\theta JB}$	Junction-to-board thermal resistance	61	44.7	50.5	35.4	°C/W
ψ_{JT}	Junction-to-top characterization parameter	7.8	8.8	34.6	—	°C/W
ψ_{JB}	Junction-to-bottom characterization parameter	60.2	44.3	49.2	—	°C/W

Copyright © 2024 Texas Instruments Incorporated

6.4 Thermal Information (continued)

THERMAL METRIC[1]		UCx84x				UNIT
		D (SOIC)	D (SOIC)	P (PDIP)	FK (LCCC)	
		8 PINS	14 PINS	8 PINS	20 PINS	
$R_{\theta JC(bottom)}$	Junction-to-case (bottom) thermal resistance	—	—	—	4.1	°C/W

(1) For more information about traditional and new thermal metrics, see the *Semiconductor and IC Package Thermal Metrics* application note.

6.5 Electrical Characteristics

over operating free-air temperature range (unless otherwise noted) –55°C ≤ T_A ≤ 125°C for the UC184x; –40°C ≤ T_A ≤ 85°C for the UC284x, 0°C ≤ T_A ≤ 70°C for the UC384x, V_{VCC} = 15 V[2]; 0.1 µF capacitor from VCC to GROUND, 0.1 µF capacitor from VREF to GROUND, R_{RT} = 10 kΩ; C_{CT} = 3.3 nF, T_J = T_A.

PARAMETER		TEST CONDITIONS		MIN	TYP	MAX	UNIT
REFERENCE SECTION							
V_{VREF}	Reference voltage	I_{VREF} = 1 mA, T_J = 25°C	UC184x and UC284x	4.95	5	5.05	V
			UC384x	4.9	5	5.1	
	Line regulation	12 ≤ VCC ≤ 25 V			6	20	mV
	Load regulation	1 ≤ I_{VREF} ≤ 20 mA			6	25	mV
	Temperature stability	See [1] [3]			0.2	0.4	mV/°C
	Total output variation	Line, load, temperature [1]	UC184x and UC284x	4.9		5.1	V
			UC384x	4.82		5.18	
	Output noise voltage	10 Hz ≤ f_{OSC} ≤ 10 kHz, [1] T_J = 25°C			50		µV
	Long term stability	T_A = 125°C, 1000 Hrs [1]			5	25	mV
	Output short circuit			–30	–100	–180	mA
OSCILLATOR SECTION							
f_{OSC}	Initial accuracy	T_J = 25°C[5]		47	52	57	kHz
	Voltage stability	12 ≤ VCC ≤ 25 V			0.2%	1%	
	Temperature stability	T_{MIN} ≤ T_A ≤ T_{MAX} [1]			5%		
$V_{RT/CT}$	Amplitude	Peak-to-peak [1]			1.7		V
ERROR AMPLIFIER SECTION							
V_{VFB}	Input voltage	V_{COMP} = 2.5 V	UC184x and UC284x	2.45	2.5	2.55	V
			UC384x	2.42	2.5	2.58	
I_{VFB}	Input bias current		UC184x and UC284x			–1	µA
			UC384x			–2	
A_{VOL}		2 ≤ V_{COMP} ≤ 4 V		65	90		dB
	Unity gain bandwidth	T_J = 25°C [1]		0.7	1		MHz
PSRR	Power supply rejection ratio	12 ≤ VCC ≤ 25 V		60	70		dB
$I_{(snk)}$	COMP sink current	V_{VFB} = 2.7 V, V_{COMP} = 1.1 V		2	6		mA
$I_{(src)}$	COMP source current	V_{VFB} = 2.3 V, V_{COMP} = 5 V		–0.5	–0.8		
V_{COMP} High	High-level output voltage	V_{VFB} = 2.3 V, R_L = 15-kΩ COMP to GROUND		5	6		V
V_{COMP} Low	Low-level output voltage	V_{VFB} = 2.7 V, R_L = 15-kΩ COMP to VREF			0.7	1.1	
CURRENT SENSE SECTION							

6.5 Electrical Characteristics (continued)

over operating free-air temperature range (unless otherwise noted) –55°C ≤ T_A ≤ 125°C for the UC184x; –40°C ≤ T_A ≤ 85°C for the UC284x, 0°C ≤ T_A ≤ 70°C for the UC384x, V_{VCC} = 15 V[2]; 0.1 µF capacitor from VCC to GROUND, 0.1 µF capacitor from VREF to GROUND, R_{RT} = 10 kΩ; C_{CT} = 3.3 nF, T_J = T_A.

PARAMETER		TEST CONDITIONS	MIN	TYP	MAX	UNIT
A_{CS}	Gain	See [4] [6]	2.85	3	3.15	V/V
V_{ISENSE}	Maximum input signal	V_{COMP} = 5 V [4]	0.9	1	1.1	V
PSRR	Power supply rejection ratio	12 V ≤ V_{VCC} ≤ 25 V [1] [4]		70		dB
I_{ISENSE}	Input bias current			–2	–10	µA
t_{DLY}	Delay to output	V_{ISENSE} stepped from 0 V to 2 V [1]		150	300	ns
OUTPUT SECTION						
V_{OUT} Low	Low-level OUTPUT voltage	I_{SINK} = 20 mA		0.1	0.4	V
		I_{SINK} = 200 mA		1.5	2.2	
V_{OUT} High	High-level OUTPUT voltage	I_{SOURCE} = 20 mA	13	13.5		V
		I_{SOURCE} = 200 mA	12	13.5		
t_{RISE}	Rise time [1]	C_{OUTPUT} = 1 nF, T_J = 25°C		25	150	ns
t_{FALL}	Fall time [1]	C_{OUTPUT} = 1 nF, T_J = 25°C,		25	150	ns
UNDERVOLTAGE LOCKOUT (UVLO)						
VCC_{ON}	Enable threshold	UC1842/4 and UC2842/4	15	16	17	V
		UC3842/4	14.5	16	17.5	
		UCx843/5	7.8	8.4	9	
VCC_{OFF}	UVLO off threshold	UC1842/4 and UC2842/4	9	10	11	V
		UC3842/4	8.5	10	11.5	
		UCx843/5	7	7.6	8.2	
PWM						
D_{MAX}	Maximum duty cycle	UCx842/3	92%	97%	100%	
		UC1844/5 and UC2844/5	46%	48%	50%	
		UC3844/5	47%	48%	50%	
D_{MIN}	Minimum duty cycle				0%	
TOTAL STANDBY CURRENT						
I_{VCC}	Start-up current			0.5	1	mA
I_{VCC}	Operating supply current	V_{VFB} = V_{ISENSE}= 0 V		11	17	
	VCC Zener voltage	I_{VCC} = 25 mA	30	39		V

(1) Specified by design. Not production tested.
(2) Adjust VCC above the start threshold before setting at 15 V
(3) Temperature stability, sometimes referred to as average temperature coefficient, is described by the equation:
$$\text{Temp Stability} = \frac{\text{VREF}_{(max)} - \text{VREF}_{(min)}}{T_{J(max)} - T_{J(min)}}$$
$VREF_{min}$ and $VREF_{max}$ are the maximum and minimum reference voltages measured over the appropriate temperature range. Note that the extremes in voltage do not necessarily occur at the extremes in temperature.
(4) Parameter measured at trip point of latch with VFB = 0 V.
(5) OUTPUT switching frequency, f_{SW}, equals the oscillator frequency, f_{OSC}, for the UCx842 and UCx843. OUTPUT switching frequency, f_{SW}, is one half oscillator frequency, f_{OSC}, for the UCx844 and UCx845.
(6) Gain defined as: A = $\Delta V_{COMP}/\Delta V_{ISENSE}$, 0 V ≤ V_{ISENSE} ≤ 0.8 V.

Copyright © 2024 Texas Instruments Incorporated

6.6 Typical Characteristics

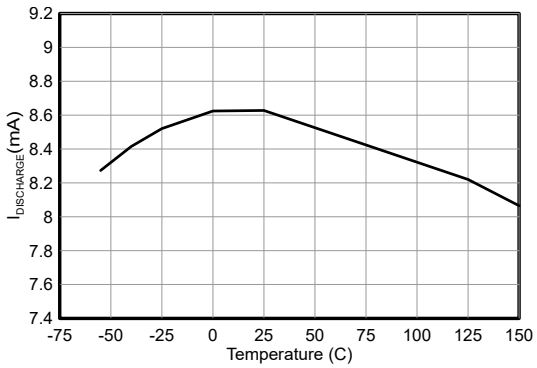

Figure 6-1. Oscillator Discharge Current vs Temperature for VCC = 15 V and V_{OSC} = 2 V

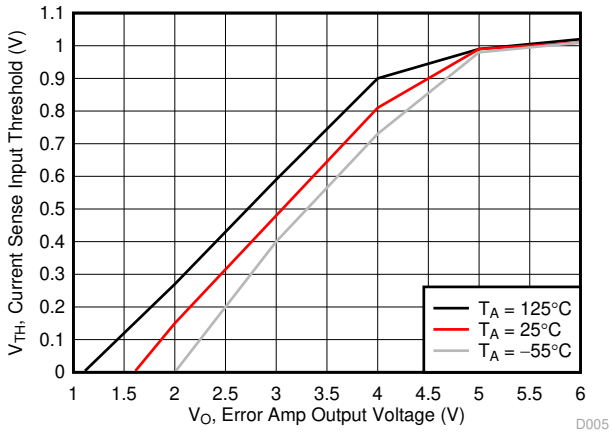

Figure 6-2. Current Sense Input Threshold vs Error Amplifier Output Voltage for VCC = 15 V

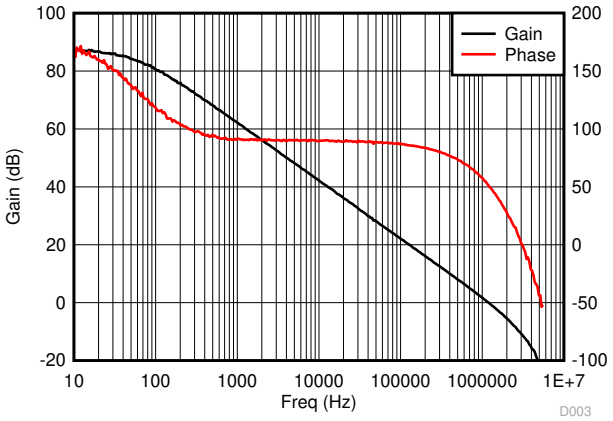

Figure 6-3. Error Amplifier Open-Loop Gain and Phase vs Frequency, VCC = 15 V, R_L = 100 kΩ, and T_A = 25 °C

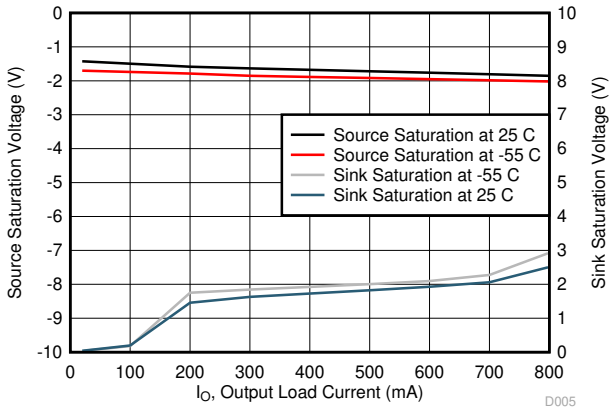

Figure 6-4. OUTPUT Saturation Voltage vs Load Current for VCC = 15 V with 5-ms Input Pulses

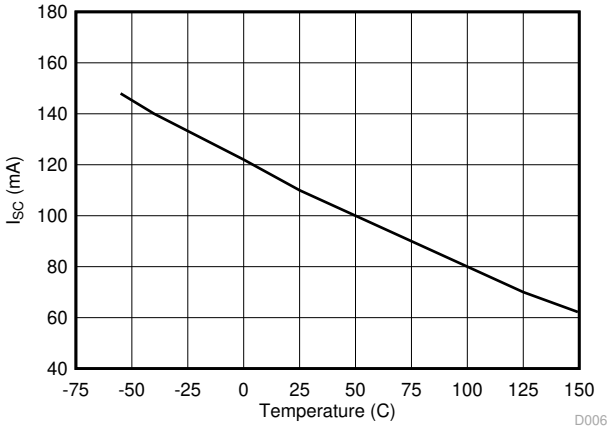

Figure 6-5. VREF Short-Circuit Current vs Temperature for VCC = 15 V

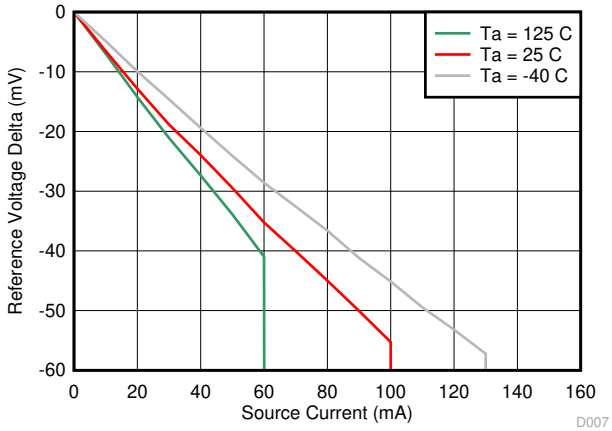

Figure 6-6. VREF Voltage vs Source Current

6.6 Typical Characteristics (continued)

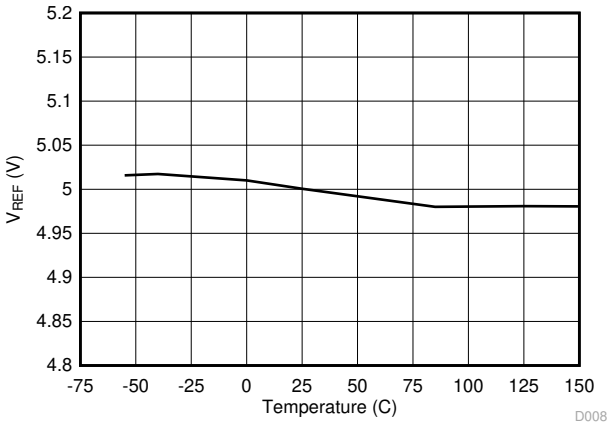

Figure 6-7. VREF Voltage vs Temperature

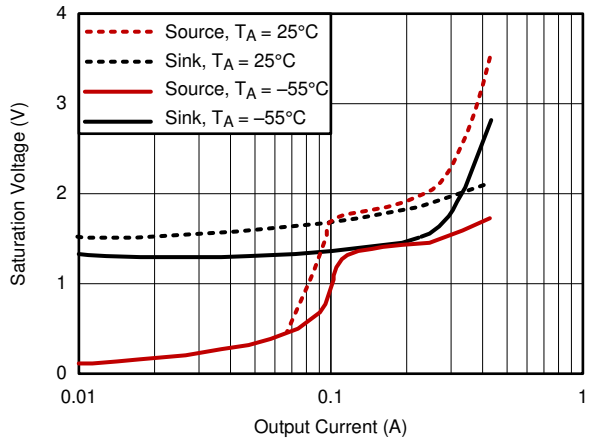

Figure 6-8. Output Saturation

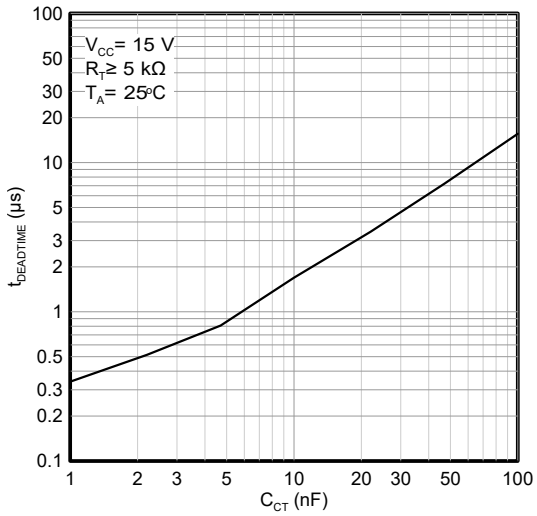

Figure 6-9. Dead Time vs Timing Capacitance, C_{CT}

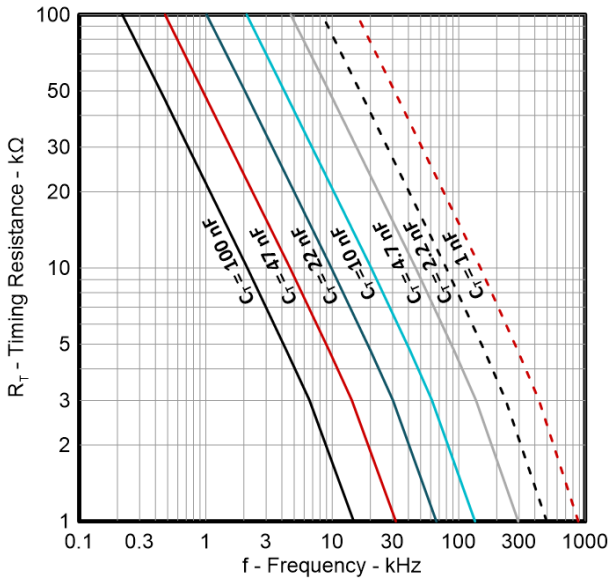

Figure 6-10. Timing Resistance, R_{RT}, vs Frequency

Copyright © 2024 Texas Instruments Incorporated

7 Detailed Description

7.1 Overview

The UCx84x series of control integrated circuits provide the features necessary to implement AC-DC or DC-to-DC fixed-frequency current-mode control schemes with a minimum number of external components. Protection circuitry includes undervoltage lockout (UVLO) and current limiting. Internally implemented circuits include a start-up current of less than 1 mA, a precision reference trimmed for accuracy at the error amplifier input, logic to verify latched operation, a pulse-width modulation (PWM) comparator that also provides current-limit control, and a totem-pole output stage designed to source or sink high-peak current. The output stage, designed for driving N-channel MOSFETs, is low when the output stage is in the off-state.

Major differences between members of these series are the UVLO thresholds, acceptable ambient temperature range, and maximum duty-cycle. The UCx842 and UCx844 devices are designed for off-line AC-DC applications with typical UVLO thresholds of 16 V (ON) and 10 V (OFF). The UCx843 and UCx845 devices are designed for regulated input voltages used in DC-DC applications with the corresponding typical thresholds of 8.4 V (ON) and 7.6 V (OFF). The UCx842 and UCx843 devices operate to duty cycles approaching 100%. The UCx844 and UCx845 obtain a duty-cycle range of 0% to 50% by the addition of an internal toggle flip-flop, which blanks the output off every other clock cycle.

The UC184x-series devices are characterized for operation from –55°C to 125°C. UC284x-series devices are characterized for operation from −40°C to 85°C. The UC384x devices are characterized for operation from 0°C to 70°C.

7.2 Functional Block Diagrams

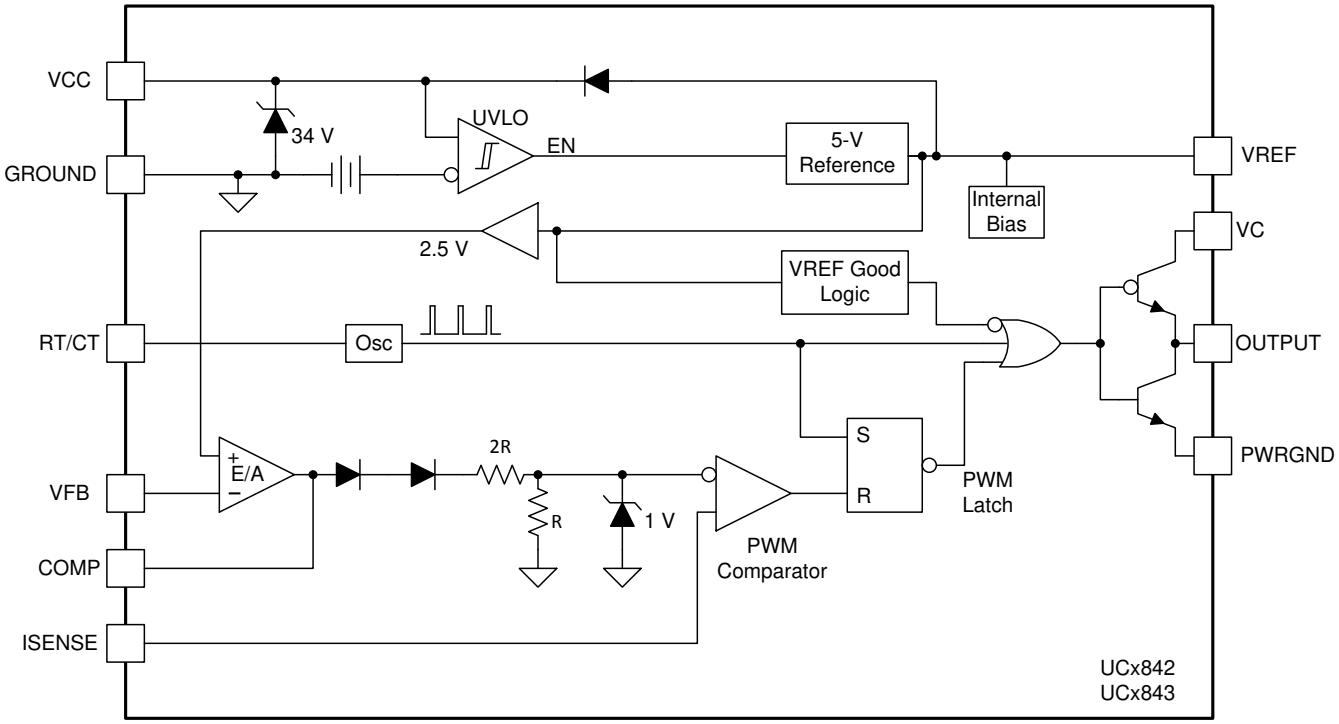

Copyright © 2016, Texas Instruments Incorporated

Figure 7-1. UCx842 and UCx843 Block Diagram, No Toggle

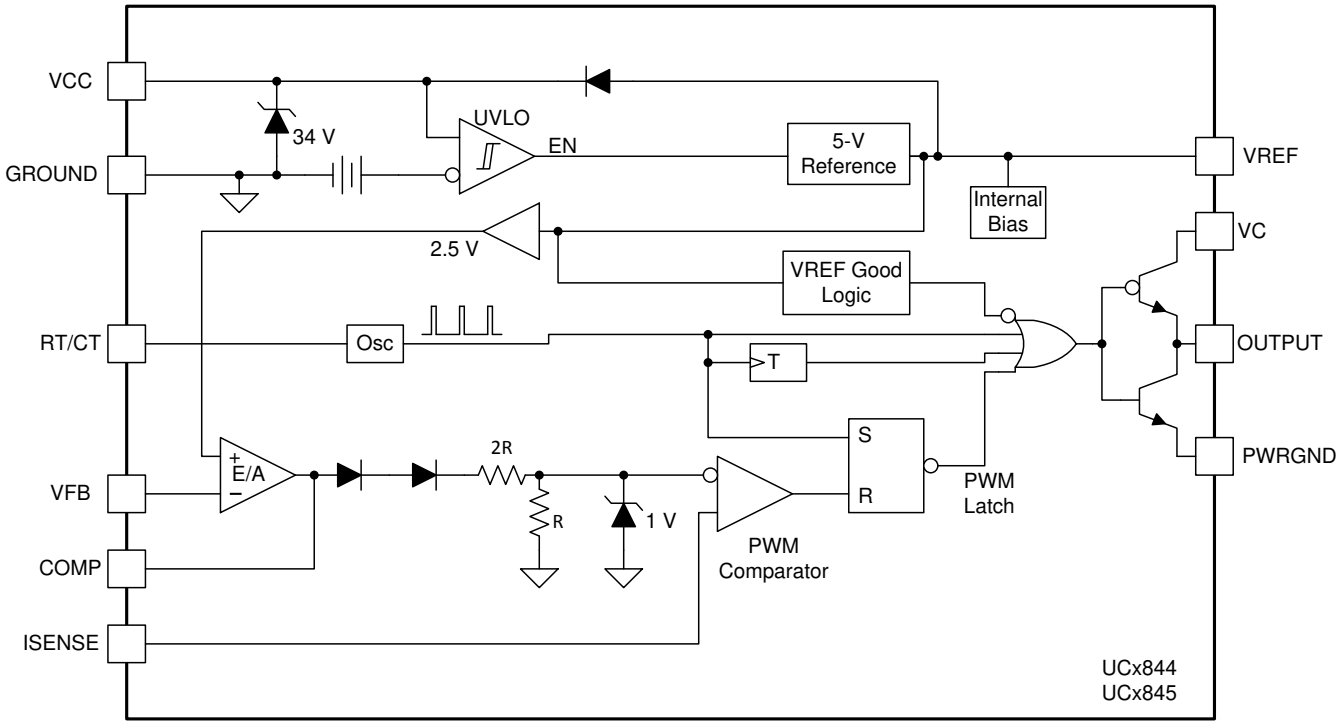

Copyright © 2016, Texas Instruments Incorporated

Figure 7-2. UCx844 and UCx845 Block Diagram, Toggle

7.3 Feature Description

7.3.1 Detailed Pin Description

7.3.1.1 COMP

The error amplifier in the UCx84x family is an open collector in parallel with a current source, with a unity-gain bandwidth of 1 MHz. The COMP terminal can both source and sink current. The error amplifier is internally current-limited, so that one can command zero duty cycle by externally forcing COMP to GROUND.

7.3.1.2 VFB

VFB is the inverting input of the error amplifier. VFB is used to control the power converter voltage-feedback loop for stability. For best stability, keep VFB lead length as short as possible and VFB stray capacitance as small as possible.

7.3.1.3 ISENSE

The UCx84x current sense input connects to the PWM comparator. Connect ISENSE to the MOSFET source current sense resistor. The PWM uses this signal to terminate the OUTPUT switch conduction. A voltage ramp can be applied to this pin to run the device with a voltage mode control configuration or to add slope compensation. To prevent false triggering due to leading edge noises, an RC current sense filter can be required. The gain of the current sense amplifier is typically 3 V/V.

7.3.1.4 RT/CT

RT/CT is the oscillator timing pin. For fixed frequency operation, set the timing capacitor charging current by connecting a resistor from VREF to RT/CT. Set the frequency by connecting timing capacitor from RT/CT to GROUND. For the best performance, keep the timing capacitor lead to GROUND as short and direct as possible. If possible, use separate ground traces for the timing capacitor and all other functions.

The UCx84x's oscillator allows for operation to 500 kHz. The device uses an external resistor to set the charging current for the external capacitor, which determines the oscillator frequency. The recommended range of timing

Copyright © 2024 Texas Instruments Incorporated

resistor values is between 5 kΩ and 100 kΩ; the recommended range of timing capacitor values is between 1 nF and 100 nF.

$$f_{OSC} = \frac{1.72}{R_{RT} \times C_{CT}} \tag{3}$$

In this equation, the switching frequency, f_{SW} is in Hz, R_{RT} is in Ω, and C_{CT} is in Farads.

7.3.1.5 GROUND

GROUND is the signal and power returning ground. TI recommends separating the signal return path and the high current gate driver path so that the signal is not affected by the switching current.

7.3.1.6 OUTPUT

The high-current bipolar totem-pole output of the UCx84x devices sinks or sources up to 1-A peak of current. The OUTPUT pin can directly drive a MOSFET. The OUTPUT of the UCx842 and UCx843 devices switches at the same frequency as the oscillator and can operate near 100% duty cycle. In the UCx844 and UCx845 devices, the switching frequency of OUTPUT is one-half that of the oscillator due to an internal T flipflop. This limits the maximum duty cycle in the UCx844 and UCx845 to < 50%. Schottky diodes can be necessary on the OUTPUT pin to prevent overshoot and undershoot due to high impedance to the supply rail and to ground, respectively. A bleeder resistor, placed between the gate and the source of the MOSFET, can be used to prevent activating the power switch with extraneous leakage currents during undervoltage lockout. An external clamp circuit can be necessary to prevent overvoltage stress on the MOSFET gate when VCC exceeds the gate voltage rating.

7.3.1.7 VCC

VCC is the power input connection for this device. In normal operation, power VCC through a current-limiting resistor. Although quiescent VCC current is only 0.5 mA, the total supply current is higher, depending on the OUTPUT current. Total VCC current is the sum of quiescent VCC current and the average OUTPUT current. Knowing the operating frequency and the MOSFET gate charge (Q_g), average OUTPUT current can be calculated from Equation 4.

$$I_{OUTPUT} = Q_g \times f_{SW} \tag{4}$$

The UCx84x has a VCC supply voltage clamp of 34 V typical, but the absolute maximum value for VCC from a low-impedance source is 30 V. For applications that have a higher input voltage than the recommended VCC voltage, place a resistor in series with VCC to increase the source impedance. The maximum value of this resistor is calculated with Equation 5.

$$R_{VCC\,(max)} = \frac{V_{IN\,(min)} - V_{VCC\,(max)}}{I_{VCC} + \left(Q_g \times f_{SW}\right)} \tag{5}$$

In Equation 5, $V_{IN(min)}$ is the minimum voltage that is used to supply VCC, $V_{VCC(max)}$ is the maximum VCC clamp voltage and I_{VCC} is the IC supply current without considering the gate driver current and Q_g is the external power MOSFET gate charge and f_{SW} is the switching frequency.

The turnon and turnoff thresholds for the UCx84x family are significantly different: 16 V and 10 V for the UCx842 and UCx844; 8.4 V and 7.6 V for the UCx843 and UCx855. To protect against noise related problems, filter VCC with an electrolytic and bypass with a ceramic capacitor to ground. Keep the capacitors close to the IC pins.

7.3.1.8 VREF

VREF is the voltage reference for the error amplifier and also for many other internal circuits in the IC. The high-speed switching logic uses VREF as the logic power supply. The 5-V reference tolerance is ±2% for the UCx84x family. The output short-circuit current is 30 mA. For reference stability and to prevent noise problems

Copyright © 2024 Texas Instruments Incorporated

with high-speed switching transients, bypass VREF to ground with a ceramic capacitor close to the IC package. A minimum of 0.1-µF ceramic capacitor is required. Additional VREF bypassing is required for external loads on the reference. An electrolytic capacitor can also be used in addition to the ceramic capacitor.

When VCC is greater than 1 V and less than the UVLO threshold, a 5-kΩ resistor pulls VREF to ground. VREF can be used as a logic output indicating power-system status because when VCC is lower than the UVLO threshold, VREF is held low.

7.3.2 Pulse-by-Pulse Current Limiting

Pulse-by-pulse limiting is inherent in the current mode control scheme. An upper limit on the peak current can be established by simply clamping the error voltage. Accurate current limiting allows optimization of magnetic and power semiconductor elements while providing reliable supply operation.

7.3.3 Current-Sense

An external series resistor, R_{CS}, senses the current and converts this current into a voltage that becomes the input to the ISENSE pin. The ISENSE pin is the noninverting input to the PWM comparator. The ISENSE input is compared to a signal proportional to the error amplifier output voltage; the gain of the current sense amplifier is typically 3 V/V. The peak I_{SENSE} current is determined by Equation 6:

$$I_{SENSE} = \frac{V_{ISENSE}}{R_{CS}} \tag{6}$$

The typical value for V_{ISENSE} is 1 V. A small RC filter, R_{CSF} and C_{CSF}, can be required to suppress switch transients caused by the reverse recovery of a secondary side diode or equivalent capacitive loading in addition to parasitic circuit impedances. The time constant of this filter can be considerably less than the switching period of the converter.

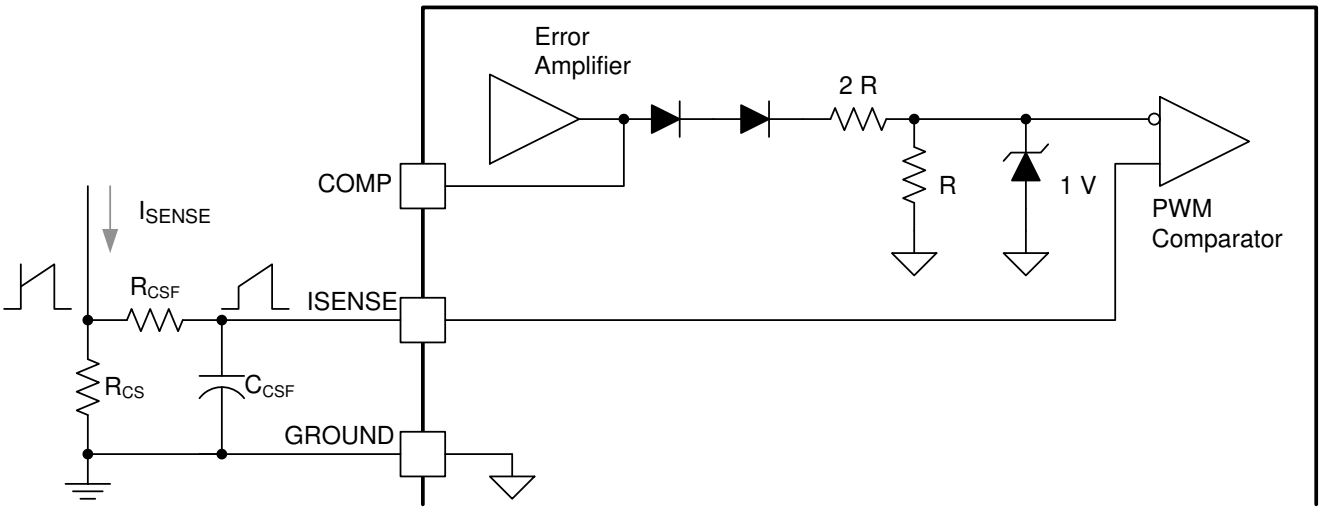

Copyright © 2016, Texas Instruments Incorporated

Figure 7-3. Current-Sense Circuit Schematic

7.3.4 Error Amplifier With Low Output Resistance

The error amplifier output is an open collector in parallel with a current source. With a low output resistance, various impedance networks can be used on the compensation pin input for error amplifier feedback. The error amplifier output, COMP, is frequently used as a control port for secondary-side regulation by using an external secondary-side adjustable voltage regulator, such as a TL431, to send an error signal across the secondary-to-primary isolation boundary through an opto-isolator, in this configuration connect the COMP pin directly to the opto-isolator feedback. On the primary side, the inverting input to the UCx48x error amplifier, VFB,

Copyright © 2024 Texas Instruments Incorporated

must be connected to GROUND. With VFB tied to GROUND, the error amplifier output, COMP, is forced to the high state and sources current, typically 0.8 mA. The opto-isolator must overcome the source current capability to control the COMP pin below the error amplifier output high level, VOH.

For primary-side regulation, configure the inverting input to the error amplifier, VFB, with a resistor divider to provide a signal that is proportional to the converter output voltage being regulated. Add the voltage loop compensation components between VFB and COMP. The internal noninverting input to the error amplifier is trimmed to 2.5 V. For best stability, keep VFB lead length as short as possible and minimize the stray capacitance on VFB.

The internal resistor divider on COMP is maintained at an R:2R ratio, the specific values of these internal resistors must not be critical in any application.

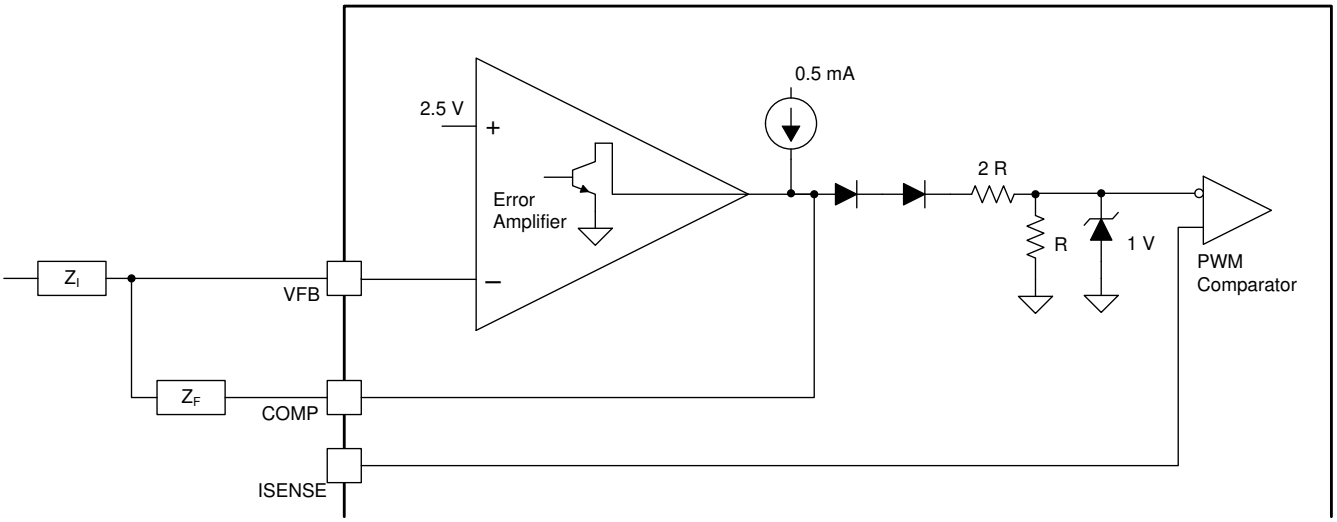

Error amplifier can source or sink up to 0.5 mA.

Figure 7-4. Error-Amplifier Configuration Schematic

7.3.5 Undervoltage Lockout

The UCx84x devices feature undervoltage lockout protection circuits for controlled operation during power-up and power-down sequences. The UVLO circuit insures that VCC is adequate to make the UCx84x fully operational before enabling the output stage. Undervoltage lockout thresholds for the UCx842, UCx843, UCx844, and UCx845 devices are optimized for two groups of applications: off-line power supplies and DC-DC converters. The 6-V hysteresis in the UCx842 and UCx844 devices prevents VCC oscillations during power sequencing. This wider VCC_{ON} to VCC_{OFF} range, make these devices ideally suited to off-line AC input applications. The UCx843 and UCx845 controllers have a much narrower VCC_{ON} to VCC_{OFF} hysteresis and can be used in DC to DC applications where the input is considered regulated.

Start-up current is less than 1 mA for efficient bootstrapping from the rectified input of an off-line converter, as illustrated by Figure 7-7. During normal circuit operation, VCC is developed from auxiliary winding N_A with D_{BIAS} and C_{VCC}. At start-up, however, C_{VCC} must be charged to 16 V through R_{START}. With a start-up current of 1 mA, R_{START} can be as large as 100 kΩ and still charge C_{VCC} when V_{AC} = 90 V RMS (low line). Power dissipation in R_{START} is then be less than 350 mW even under high line (V_{AC}= 130 V RMS) conditions.

During UVLO the IC draws less than 1 mA of supply current. Once crossing the turnon threshold the IC supply current increases to a maximum of 17 mA, typically 11 mA, During undervoltage lockout, the output driver is biased to a high impedance state and sinks minor amounts of current. A bleeder resistor, placed between the gate and the source of the MOSFET can be used to prevent activating the power switch with extraneous leakage currents during undervoltage lockout.

Copyright © 2024 Texas Instruments Incorporated

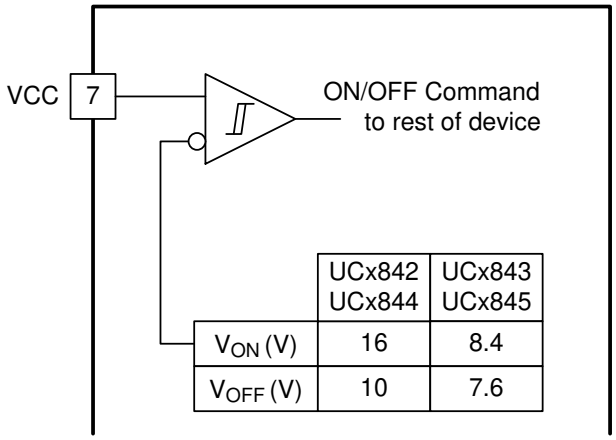

	UCx842 UCx844	UCx843 UCx845
V_{ON} (V)	16	8.4
V_{OFF} (V)	10	7.6

Copyright © 2016, Texas Instruments Incorporated

Figure 7-5. UVLO Threshold

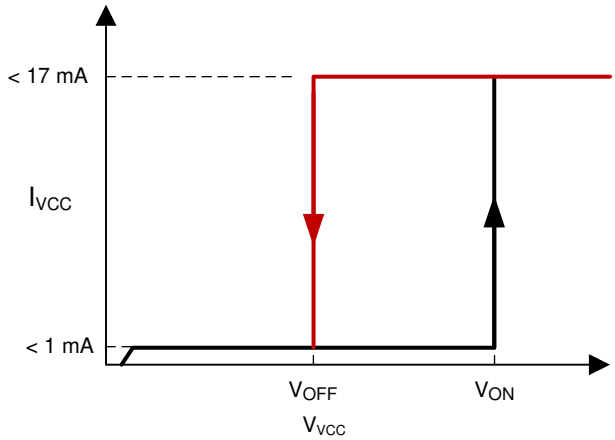

Figure 7-6. UVLO ON and OFF Profile

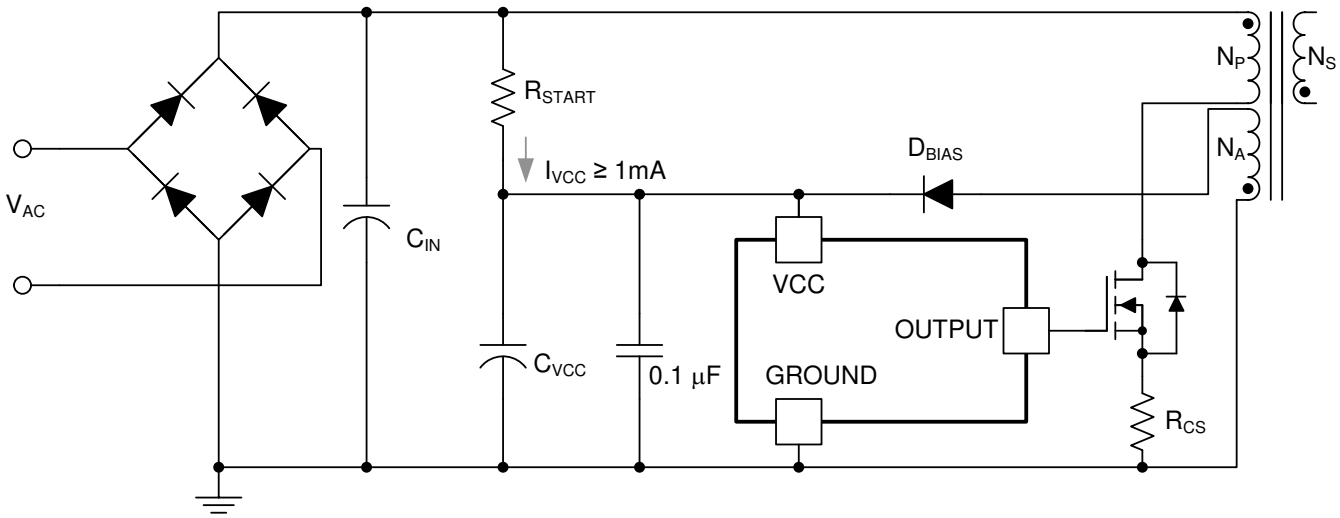

Figure 7-7. Providing Power to UCx84x

7.3.6 Oscillator

The oscillator allows for up to 500-kHz switching frequency. The OUTPUT gate drive is the same frequency as the oscillator in the UCx842 and UCx843 devices and can operate near 100% duty cycle. In the UCx844 and UCx845 devices, the frequency of OUTPUT is one-half that of the oscillator due to an internal T flipflop that blanks the output off every other clock cycle, resulting in a maximum duty cycle for these devices of < 50% of the switching frequency. An external resistor, R_{RT}, connected from VREF to RT/CT sets the charging current for the timing capacitor, C_{CT}, which is connected from RT/CT to GROUND. An R_{RT} value greater than 5 kΩ is recommended on RT/CT to set the positive ramp time of the internal oscillator. Using a value of 5 kΩ or greater for R_{RT} maintains a favorable ratio between the internal impedance and the external oscillator set resistor and results in minimal change in frequency over temperature. Using a value of less the recommended minimum value can result in frequency drift over temperature, part tolerances, or process variations.

The peak-to-peak amplitude of the oscillator waveform is 1.7 V in UCx84x devices. The UCx842 and UCx843 have a maximum duty cycle of approximately 100%, whereas the UCx844 and UCx845 are clamped to 50% maximum by an internal toggle flip flop. This duty cycle clamp is advantageous in most flyback and forward converters. For optimum IC performance the dead-time can not exceed 15% of the oscillator clock period. The discharge current, typically 6 mA at room temperature, sets the dead time, see Figure 6-9. During the discharge,

Copyright © 2024 Texas Instruments Incorporated

or *dead* time, the internal clock signal blanks the output to the low state. This limits the maximum duty cycle D_{MAX} to:

$$D_{MAX} = 1 - (t_{DEADTIME} \times f_{OSC}) \tag{7}$$

Equation 8 applies to UCx842 and UCx843 units because the OUTPUT switches at the same frequency as the oscillator and the maximum duty cycle can be as high as 100%.

$$D_{MAX} = 1 - \left(t_{DEADTIME} \times \frac{f_{OSC}}{2}\right) \tag{8}$$

Equation 8 applies to UCx844 and UCx845 units because the OUTPUT switches at half the frequency as the oscillator and the maximum duty cycle can be as high as 50%.

When the power transistor turns off, a noise spike is coupled to the oscillator RT/CT terminal. At high duty cycles, the voltage at RT/CT is approaching the threshold level (approximately 2.7 V, established by the internal oscillator circuit) when this spike occurs. A spike of sufficient amplitude prematurely trips the oscillator. To minimize the noise spike, choose C_{CT} as large as possible, remembering that dead time increases with C_{CT}. C_{CT} is recommended to never be less than approximately 1000 pF. Often the noise which causes this problem is caused by the OUTPUT being pulled below ground at turnoff by external parasitics. This is particularly true when driving MOSFETs. A Schottky diode clamp from GROUND to OUTPUT prevents such output noise from feeding to the oscillator.

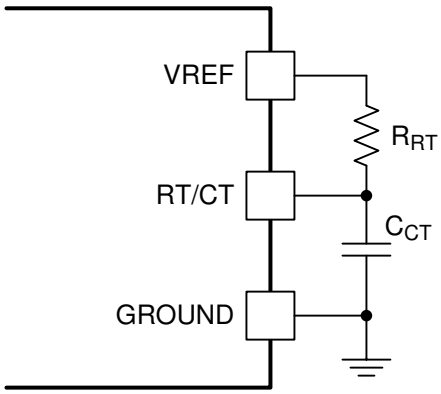

Copyright © 2016, Texas Instruments Incorporated

For R_{RT} > 5 kΩ: $f_{OSC} = \frac{1.72}{R_{RT} \times C_{CT}}$

Figure 7-8. Oscillator Section Schematic

7.3.7 Synchronization

The simplest method to force synchronization uses the timing capacitor, C_{CT}, in near standard configuration. Rather than bring C_{CT} to ground directly, a small resistor is placed in series with C_{CT} to ground. This resistor serves as the input for the sync pulse which raises the C_{CT} voltage above the oscillator's internal upper threshold. The PWM is allowed to run at the frequency set by R_{RT} and C_{CT} until the sync pulse appears. This scheme offers several advantages including having the local ramp available for slope compensation. The UC3842/3/4/5 oscillator must be set to a lower frequency than the sync pulse stream, typically 20% with a 0.5-V pulse applied across the resistor.

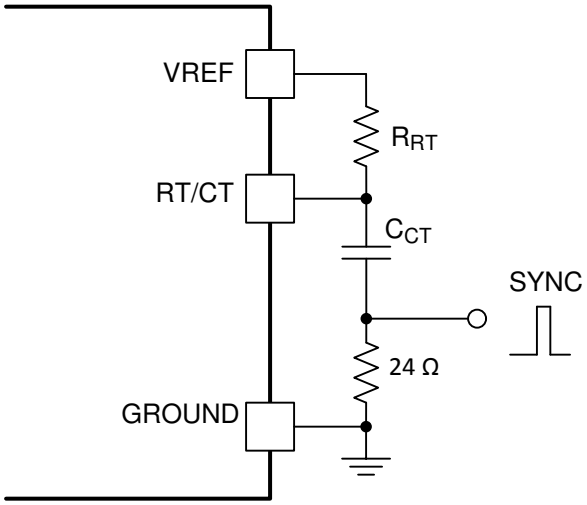

Figure 7-9. Synchronizing the Oscillator

7.3.8 Shutdown Technique

The PWM controller (see Figure 7-10) can be shut down by two methods: either raise the voltage at ISENSE above 1 V or pull the COMP terminal below a voltage two diode drops above ground. Either method causes the output of the PWM comparator to be high (see *Figure 7-10*). The PWM latch is reset dominant so that the output remains low until the next clock cycle after the shutdown condition at the COMP or ISENSE terminal is removed. In one example, an externally latched shutdown can be accomplished by adding an SCR that resets by cycling VCC below the lower UVLO threshold. At this point, the reference turns off, allowing the SCR to reset.

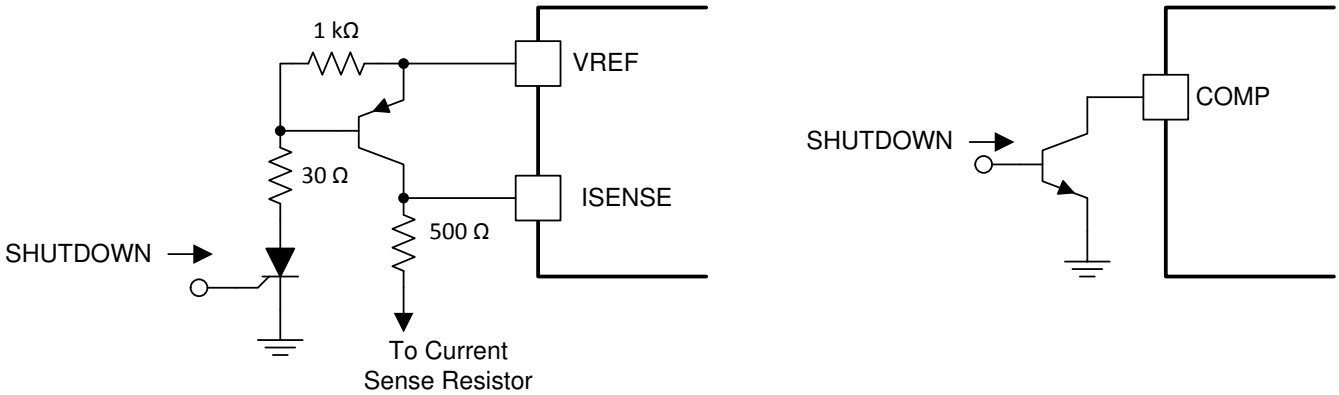

Figure 7-10. Shutdown Techniques

7.3.9 Slope Compensation

A fraction of the oscillator ramp can be summed resistively with the current-sense signal to provide slope compensation for converters requiring duty cycles over 50% (see Figure 7-11). Note that capacitor C_{CSF} forms a filter with R_{CSF} to suppress the leading-edge switch spikes.

Copyright © 2024 Texas Instruments Incorporated

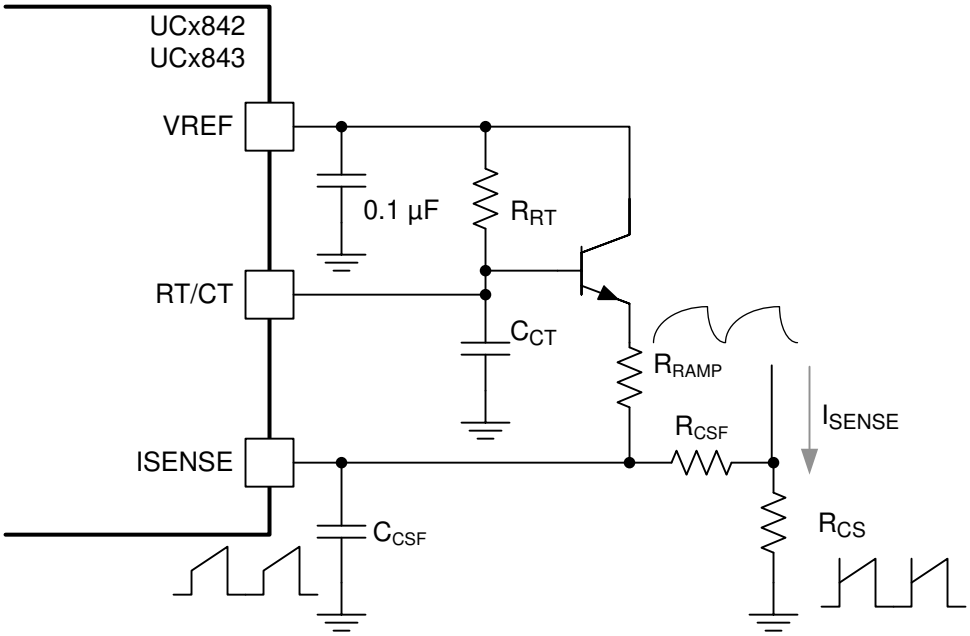

Copyright © 2016, Texas Instruments Incorporated

Figure 7-11. Slope Compensation

7.3.10 Soft Start

Upon power up, gradually widen the PWM pulse width starting at zero duty cycle is desirable. The UCx84x devices do not have internal soft-start control, but this can be easily implemented externally with three components. An R/C network is used to provide the time constant to control the error amplifier output. A transistor is also used to isolate the components from the normal operation of either node. A transistor also minimizes the loading effects on the RT/CT time constant by amplification through the transistors gain.

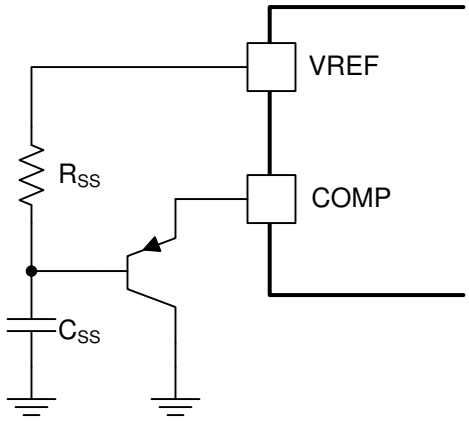

Figure 7-12. Soft-Start Circuitry

7.3.11 Voltage Mode

In duty cycle control (voltage mode), pulse width modulation is attained by comparing the error amplifier output to an artificial ramp. The oscillator timing capacitor C_{CT} is used to generate a sawtooth waveform on both current or voltage mode ICs. To use the UCx84x in a voltage mode configuration, this sawtooth waveform is input to the current sense input, ISENSE, for comparison to the error voltage at the PWM comparator. This sawtooth is used to determine pulse width instead of the actual primary current in this method. Loop compensation is similar to that of voltage mode controllers with subtle differences due to the low output resistance voltage amplifier in the

UCx84x as opposed to a transconductance (current) type amplifier used in traditional voltage mode controllers. For further reference on topologies and compensation, consult *Closing the Feedback Loop* (SLUP068).

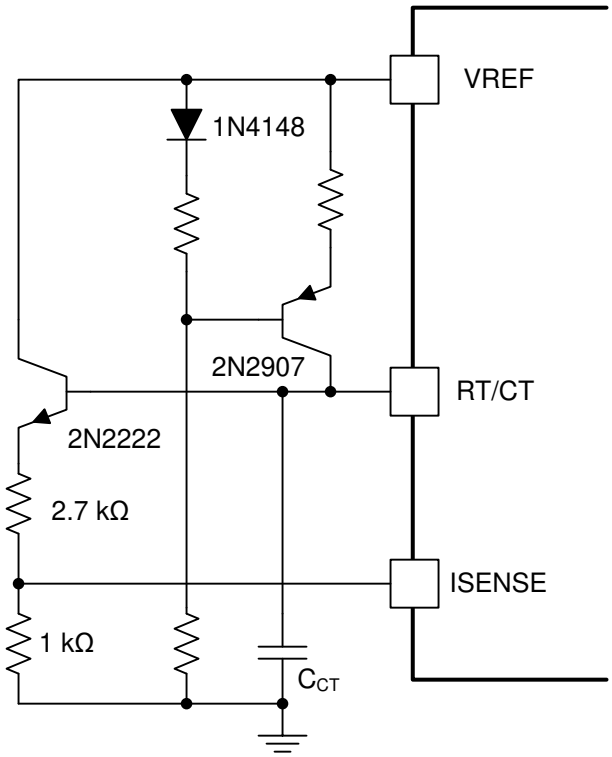

Figure 7-13. Current Mode PWM Used as a Voltage Mode PWM

7.4 Device Functional Modes

7.4.1 Normal Operation

During normal operating mode, the IC can be used in peak current mode or voltage mode control. When the converter is operating in peak current mode, the controller regulates the converter's peak current and duty cycle. When the IC is used in voltage mode control, the controller regulates the power converter's duty cycle. The regulation of the system's peak current and duty cycle can be achieved with the use of the integrated error amplifier and external feedback circuitry.

7.4.2 UVLO Mode

During the system start-up, VCC voltage starts to rise from 0 V. Before the VCC voltage reaches the corresponding turn on threshold, the IC is operating in UVLO mode. In this mode, the VREF pin voltage is not generated. When VCC is above 1 V and below the turnon threshold, the VREF pin is actively pulled low through a 5-kΩ resistor. This way, VREF can be used as a logic signal to indicate UVLO mode. If the bias voltage to VCC drops below the UVLO-off threshold, PWM switching stops and VREF returns to 0 V. The device can be restarted by applying a voltage greater than the UVLO-on threshold to the VCC pin.

Copyright © 2024 Texas Instruments Incorporated

8 Application and Implementation

Note

Information in the following applications sections is not part of the TI component specification, and TI does not warrant its accuracy or completeness. TI's customers are responsible for determining suitability of components for their purposes, as well as validating and testing their design implementation to confirm system functionality.

8.1 Application Information

The UCx84x controllers are peak current mode pulse width modulators. These controllers have an onboard amplifier and can be used in isolated and non-isolated power supply design. There is an onboard totem pole gate driver capable of delivering 1 A of peak current. This is a high-speed PWM capable of operating at switching frequencies up to 500 kHz.

8.1.1 Open-Loop Test Fixture

The following application is an open-loop laboratory test fixture. This circuit demonstrates the setup and use of the UCx84x devices and the internal circuitry.

In the open-loop laboratory test fixture (see Figure 8-1), high peak currents associated with loads necessitate careful grounding techniques. Timing and bypass capacitors can be connected close to the GROUND terminal in a single-point ground. The transistor and 5-kΩ potentiometer sample the oscillator waveform and apply an adjustable ramp to the ISENSE terminal.

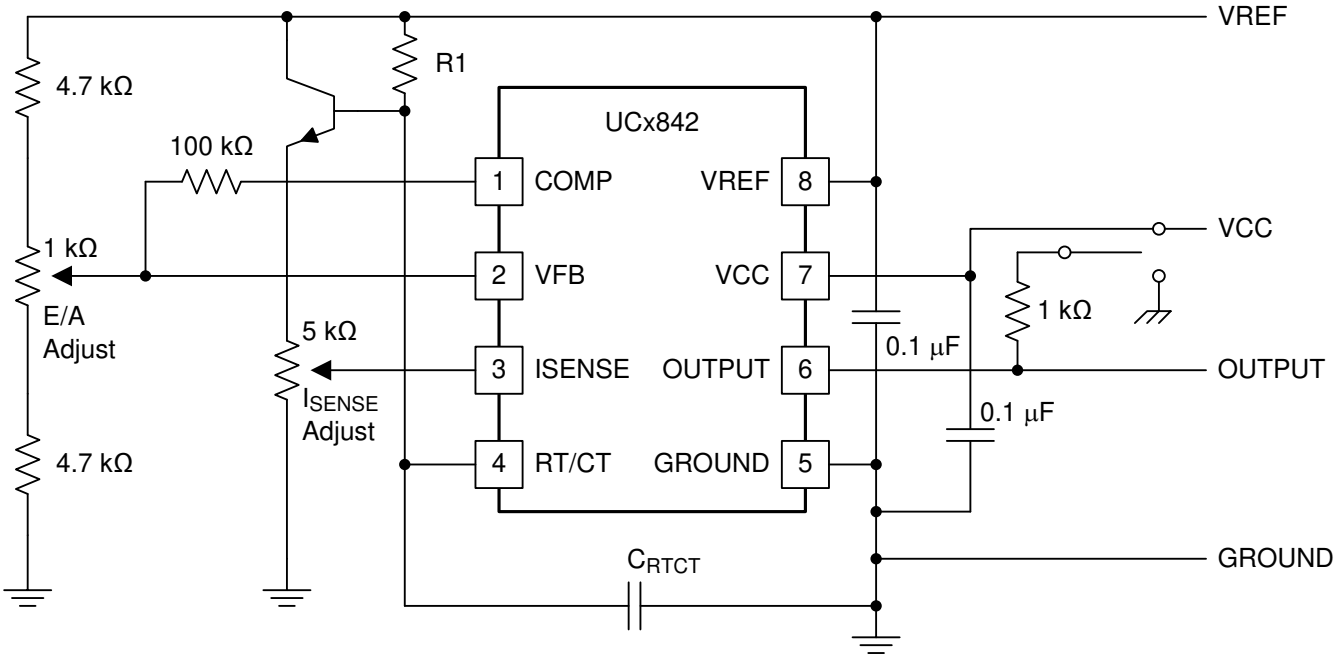

Copyright © 2016, Texas Instruments Incorporated

Figure 8-1. Open-Loop Laboratory Test Fixture

8.2 Typical Application

A typical application for the UC2842 in an off-line flyback converter is shown in Figure 8-2. The UC2842 uses an inner current control loop that contains a small current sense resistor which senses the primary inductor current ramp. This current sense resistor transforms the inductor current waveform to a voltage signal that is input directly into the primary side PWM comparator. This inner loop determines the response to input voltage changes. An outer voltage control loop involves comparing a portion of the output voltage to a reference voltage at the input of an error amplifier. When used in an off-line isolated application, the voltage feedback of the isolated output is accomplished using a secondary-side error amplifier and adjustable voltage reference, such as the TL431. The error signal crosses the primary to secondary isolation boundary using an opto-isolator whose collector is connected to the VREF pin and the emitter is connected to VFB. The outer voltage control loop determines the response to load changes.

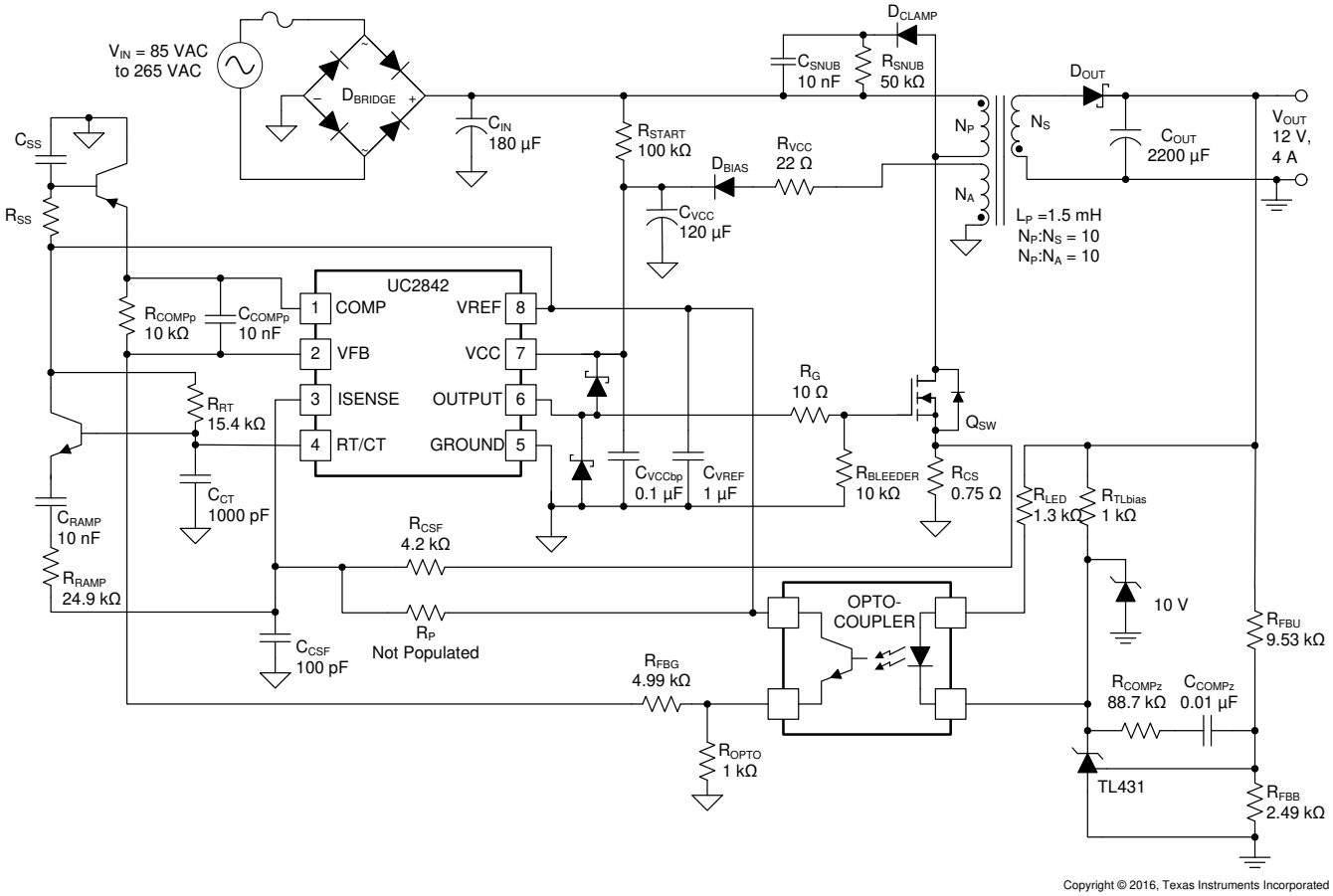

Copyright © 2016, Texas Instruments Incorporated

Figure 8-2. Typical Application Design Example Schematic

8.2.1 Design Requirements

Table 8-1 illustrates a typical set of performance requirements for an off-line flyback converter capable of providing 48 W at 12-V output voltage from a universal AC input. The design uses peak primary current control in a continuous current mode PWM converter.

Table 8-1. Performance Requirements

PARAMETER		TEST CONDITIONS	MIN	NOM	MAX	UNIT
V_{IN}	Input Voltage		85	115/230	265	V_{RMS}
f_{LINE}	Line Frequency		47	50/60	63	Hz
V_{OUT}	Output Voltage	$I_{OUT(min)} \leq I_{OUT} \leq I_{OUT(max)}$	11.75	12	12.25	V

Copyright © 2024 Texas Instruments Incorporated

Table 8-1. Performance Requirements (continued)

PARAMETER		TEST CONDITIONS	MIN	NOM	MAX	UNIT
V_{RIPPLE}	Output Ripple Voltage	$I_{OUT(min)} \le I_{OUT} \le I_{OUT(max)}$			100	mVpp
I_{OUT}	Output Current		0	4		A
f_{SW}	Switching Frequency			100		kHz
η	Efficiency			85%		

8.2.2 Detailed Design Procedure

This procedure outlines the steps to design an off-line universal input continuous current mode (CCM) flyback converter using the UC2842. See Figure 8-2 for component names referred to in the design procedure.

8.2.2.1 Input Bulk Capacitor and Minimum Bulk Voltage

Bulk capacitance can consist of one or more capacitors connected in parallel, often with some inductance between the capacitors to suppress differential-mode conducted noise. The value of the input capacitor sets the minimum bulk voltage; setting the bulk voltage lower by using minimal input capacitance results in higher peak primary currents leading to more stress on the MOSFET switch, the transformer, and the output capacitors. Setting the bulk voltage higher by using a larger input capacitor results in higher peak current from the input source and the capacitor is physically larger. Compromising between size and component stresses determines the acceptable minimum input voltage. The total required value for the primary-side bulk capacitance, C_{IN}, is selected based upon the power level of the converter, P_{OUT}, the efficiency target, η, the minimum input voltage, $V_{IN(min)}$, and is chosen to maintain an acceptable minimum bulk voltage level, $V_{BULK(min)}$, using Equation 9.

$$C_{IN} = \frac{2 \times P_{IN} \times \left(0.25 + \frac{1}{\pi} \times \arcsin\left(\frac{V_{BULK\,(min)}}{\sqrt{2} \times V_{IN\,(min)}}\right)\right)}{\left(2 \times V_{IN\,(min)}^2 - V_{BULK\,(min)}^2\right) \times f_{LINE\,(min)}} \tag{9}$$

In this equation, $V_{IN(min)}$ is the RMS value of the minimum AC input voltage, 85 VRMS, whose minimum line frequency is denoted as $f_{LINE(min)}$, equal to 47 Hz. Based on the C_{IN} equation, to achieve a minimum bulk voltage of 75 V, assuming 85% converter efficiency, the bulk capacitor must be larger than 126 µF; 180 µF is selected for the design, taking into consideration component tolerances and efficiency estimation.

8.2.2.2 Transformer Turns Ratio and Maximum Duty Cycle

The transformer design starts with selecting a suitable switching frequency for the given application. The UC2842 is capable of switching up to 500 kHz but considerations such as overall converter size, switching losses, core loss, system compatibility, and interference with communication frequency bands generally determine an optimum frequency that can be used. For this off-line converter, the switching frequency, f_{SW}, is selected to be 110 kHz as a compromise to minimize the transformer size and the EMI filter size, and still have acceptable losses.

The transformer primary to secondary turns ratio, N_{PS}, can be selected based on the desired MOSFET voltage rating and the secondary diode voltage rating. Because the maximum input voltage is 265 VRMS, the peak bulk input voltage can be calculated as shown in Equation 10.

$$V_{BULK\,(max)} = \sqrt{2} \times V_{IN\,(max)} \approx 375\ V \tag{10}$$

To minimize the cost of the system, a readily available 650-V MOSFET is selected. Derating the maximum voltage stress on the drain to 80% of the rated value and allowing for a leakage inductance voltage spike of up to 30% of the maximum bulk input voltage, the reflected output voltage must be less than 130 V as shown in Equation 11.

$$V_{REFLECTED} = 0.8 \times \left(V_{DS(rated)} - 1.3 \times V_{BULK(max)}\right) = 130.2\,V \tag{11}$$

The maximum primary to secondary transformer turns ratio, N_{PS}, for a 12 V output can be selected as

$$N_{PS} = \frac{V_{REFLECTED}}{V_{OUT}} = 10.85 \tag{12}$$

A turns ratio of N_{PS} = 10 is used in the design example.

The auxiliary winding is used to supply bias voltage to the UC2842. Maintaining the bias voltage above the VCC minimum operating voltage after turn on is required for stable operation. The minimum VCC operating voltage for the UC2842 version of the controller is 10 V. The auxiliary winding is selected to support a 12-V bias voltage so that the voltage is above the minimum operating level but still keeps the losses low in the IC. The primary to auxiliary turns ratio, N_{PA}, can be calculated from Equation 13:

$$N_{PA} = N_{PS} \times \frac{V_{OUT}}{V_{BIAS}} = 10 \tag{13}$$

The output diode experiences a voltage stress that is equal to the output voltage plus the reflected input voltage:

$$V_{DIODE} = \frac{V_{BULK\,(max)}}{N_{PS}} + V_{OUT} = 49.5\ V \tag{14}$$

To allow for voltage spikes due to ringing, a Schottky diode with a rated blocking voltage of greater than 60 V is recommended for this design. The forward voltage drop, V_F, of this diode is estimated to be equal to 0.6 V

To avoid high peak currents, the flyback converter in this design operates in continuous conduction mode. Once N_{PS} has been determined, the maximum duty cycle, D_{MAX}, can be calculated using the transfer function for a CCM flyback converter:

$$\frac{V_{OUT} + V_F}{V_{BULK\,(min)}} = \left(\frac{1}{N_{PS}}\right) \times \left(\frac{D_{MAX}}{1 - D_{MAX}}\right) \tag{15}$$

$$D_{MAX} = \frac{N_{PS} \times \left(V_{OUT} + V_F\right)}{V_{BULK(min)} + N_{PS} \times \left(V_{OUT} + V_F\right)} = 0.627 \tag{16}$$

Because the maximum duty cycle exceeds 50%, and the design is an off-line (AC-input) application, the UC2842 is best suited for this application.

8.2.2.3 Transformer Inductance and Peak Currents

For this design example, the transformer magnetizing inductance is selected based upon the CCM condition. An inductance value that allows the converter to stay in CCM over a wider operating range before transitioning into discontinuous current mode is used to minimize losses due to otherwise high currents and also to decrease the output ripple. The design of the transformer in this example sizes the inductance so the converter enters CCM operation at approximately 10% load and minimum bulk voltage to minimize output ripple.

The inductor, L_P for a CCM flyback can be calculated using Equation 17.

$$L_P = \frac{1}{2} \times \frac{\left(V_{BULK\,(min)}\right)^2 \times \left(\frac{N_{PS} \times V_{OUT}}{V_{BULK\,(min)} + N_{PS} \times V_{OUT}}\right)^2}{0.1 \times P_{IN} \times f_{SW}} \tag{17}$$

Copyright © 2024 Texas Instruments Incorporated

In Equation 17, the input power, P_{IN}, is estimated by dividing the maximum output power, P_{OUT}, by the target efficiency, η, and f_{SW} is the switching frequency; for the UC2842 the switching frequency is equal to the oscillator frequency and is set to 110 kHz. Therefore, the transformer inductance can be approximately 1.8 mH; a 1.5-mH inductance is chosen as the magnetizing inductance value for this design.

Based on calculated inductor value and the switching frequency, the current stress of the MOSFET and output diode can be calculated.

The peak current in the primary-side MOSFET of a CCM flyback can be calculated as shown in Equation 18.

$$I_{PK_{MOSFET}} = \frac{P_{IN}}{V_{BULK\,(min)} \times \frac{N_{PS} \times V_{OUT}}{V_{BULK\,(min)} + (N_{PS} \times V_{OUT})}} + \left(\frac{V_{BULK\,(min)}}{2 \times L_m} \times \frac{\frac{N_{PS} \times V_{OUT}}{V_{BULK\,(min)} + (N_{PS} \times V_{OUT})}}{f_{SW}} \right) \tag{18}$$

The MOSFET peak current is 1.36 A. The RMS current of the MOSFET is calculated to be 0.97 A as shown in Equation 19. Therefore, IRFB9N65A is selected to be used as the primary-side switch.

$$I_{RMS_{MOSFET}} = \sqrt{\frac{D_{MAX}{}^3}{3} \times \left(\frac{V_{BULK\,(min)}}{L_P \times f_{SW}}\right)^2 - \left(\frac{D_{MAX}{}^2 \times I_{PK_{MOSFET}} \times V_{BULK\,(min)}}{L_P \times f_{SW}}\right) + \left(D_{MAX} \times I_{PK_{MOSFET}}{}^2\right)} \tag{19}$$

The output diode peak current is equal to the MOSFET peak current reflected to the secondary side.

$$I_{PK_{DIODE}} = N_{PS} \times I_{PK_{MOSFET}} = 13.634\ A \tag{20}$$

The diode average current is equal to the total output current, 4 A; combined with a required 60-V rating and 13.6-A peak current requirement, a 48CTQ060-1 is selected for the output diode.

8.2.2.4 Output Capacitor

The total output capacitance is selected based upon the output voltage ripple requirement. In this design, 0.1% voltage ripple is assumed. Based on the 0.1% ripple requirement, the capacitor value can be selected using Equation 21.

$$C_{OUT} \geq \frac{I_{OUT} \times \frac{N_{PS} \times V_{OUT}}{V_{BULK\,(min)} + N_{PS} \times V_{OUT}}}{0.001 \times V_{OUT} \times f_{SW}} = 1865\ \mu F \tag{21}$$

To design for device tolerances, a 2200-µF capacitor is selected.

8.2.2.5 Current Sensing Network

The current sensing network consists of the primary-side current sensing resistor, R_{CS}, filtering components R_{CSF} and C_{CSF}, and optional R_P. Typically, the direct current sense signal contains a large amplitude leading edge spike associated with the turnon of the main power MOSFET, reverse recovery of the output rectifier, and other factors including charging and discharging of parasitic capacitances. Therefore, C_{CSF} and R_{CSF} form a low-pass filter that provides immunity to suppress the leading edge spike. For this converter, C_{CSF} is chosen to be 100 pF.

Without R_P, R_{CS} sets the maximum peak current in the transformer primary based on the maximum amplitude of the ISENSE pin, which is specified to be 1 V. To achieve 1.36-A primary side peak current, a 0.75-Ω resistor is chosen for R_{CS}.

The high current sense threshold of ISENSE helps to provide better noise immunity to the system but also results in higher losses in the current sense resistor. These current sense losses can be minimized by injecting an offset voltage into the current sense signal using R_P. R_P and R_{CSF} form a resistor divider network from the

current sense signal to the device's reference voltage, VREF, which adds an offset to the current sense voltage. This technique still achieves current mode control with cycle-by-cycle over-current protection. To calculate required offset value (V_{OFFSET}), use Equation 22.

$$V_{OFFSET} = \frac{R_{CSF}}{R_{CSF} + R_P} \times V_{REF} \tag{22}$$

Once R_P is added, adjust the current sense resistor, R_{CS}, accordingly.

8.2.2.6 Gate Drive Resistor

R_G is the gate driver resistor for the power switch, Q_{SW}. The selection of this resistor value must be done in conjunction with EMI compliance testing and efficiency testing. Using a larger resistor value for R_G slows down the turnon and turnoff of the MOSFET. A slower switching speed reduces EMI but also increases the switching loss. A trade-off between switching loss and EMI performance must be carefully performed. For this design, a 10-Ω resistor is chosen for the gate drive resistor.

8.2.2.7 VREF Capacitor

A precision 5-V reference voltage performs several important functions. The reference voltage is divided down internally to 2.5 V and connected to the error amplifier's noninverting input for accurate output voltage regulation. Other duties of the reference voltage are to set internal bias currents and thresholds for functions such as the oscillator upper and lower thresholds. Therefore, the reference voltage must be bypassed with a ceramic capacitor (C_{VREF}), a 1-µF, 16-V ceramic capacitor is selected for this converter. Placement of this capacitor on the physical printed-circuit board layout must be as close as possible to the respective VREF and GROUND pins.

8.2.2.8 RT/CT

The internal oscillator uses a timing capacitor (C_{CT}) and a timing resistor (R_{RT}) to program the oscillator frequency and maximum duty cycle. The operating frequency can be programmed based the curves in *Section 8.2.3*, where the timing resistor can be found once the timing capacitor is selected. A flat temperature coefficient for the timing capacitor is best, typical of most COG or NPO type capacitors. For this converter, 15.4 kΩ and 1000 pF are selected for R_{RT} and C_{CT} to operate at 110-kHz switching.

8.2.2.9 Start-Up Circuit

At start-up, the IC gets the power directly from the high-voltage bulk, through a high-voltage resistor R_{START}. The selection of the start-up resistor is the trade-off between power loss and start-up time. The current flowing through R_{START} at the minimum input voltage must be higher than the VCC current under UVLO conditions (1 mA at the maximum value). A resistance of 100-kΩ is chosen for R_{START}, providing 1 mA of start-up current at low-line conditions. The start-up resistor is physically comprised of two 50-kΩ resistors in series to meet the high voltage requirements and power rating at high-line.

After VCC is charged up above the UVLO-on threshold, the UC2842 starts to consume full operating current. The VCC capacitor is required to provide enough energy to prevent the voltage from dropping below the UVLO-off threshold during start-up, before the output is able to reach the regulated level. A large bulk capacitance holds more energy but results in slower start-up time. In this design, a 120-µF capacitor is chosen to provide enough energy and maintain a start-up time of approximately 2 seconds.

8.2.2.10 Voltage Feedback Compensation

Feedback compensation, also called closed-loop control, can reduce or eliminate steady state error, reduce the sensitivity of the system to parametric changes, change the gain or phase of a system over some desired frequency range, reduce the effects of small signal load disturbances and noise on system performance, and create a stable system from an unstable system. A system is stable if the response to a perturbation is that the perturbation eventually dies out. A peak current mode flyback uses an outer voltage feedback loop to stabilize the converter. To adequately compensate the voltage loop, the open-loop parameters of the power stage must be determined.

Copyright © 2024 Texas Instruments Incorporated

8.2.2.10.1 Power Stage Poles and Zeroes

The first step in compensating a fixed frequency flyback is to verify if the converter is continuous conduction mode (CCM) or discontinuous conduction mode (DCM). If the primary inductance, L_P, is greater than the inductance for DCM/CCM boundary mode operation, called the critical inductance, or L_{Pcrit}, then the converter operates in CCM:

$$L_P > L_{Pcrit}\text{, then CCM} \tag{23}$$

$$L_{Pcrit} = \frac{R_{OUT} \times (N_{PS})^2}{2 \times f_{SW}} \times \left(\frac{V_{IN}}{V_{IN} + V_{OUT} \times N_{PS}}\right)^2 \tag{24}$$

For the entire input voltage range, the selected inductor has value larger than the critical inductor. Therefore, the converter operates in CCM and the compensation loop requires design based on CCM flyback equations.

The current-to-voltage conversion is done externally with the ground-referenced current sense resistor, R_{CS}, and the internal resistor divider of 2R/R which sets up the internal current sense gain, A_{CS} = 3. Note that the exact value of these internal resistors is not critical but the IC provides tight control of the resistor divider ratio, so regardless of the actual resistor value variations the relative value to each other is maintained.

The DC open-loop gain, G_O, of the fixed-frequency voltage control loop of a peak current mode control CCM flyback converter shown in Equation 25 is approximated by first using the output load, R_{OUT}, the primary to secondary turns ratio, N_{PS}, the maximum duty cycle, D, calculated in Equation 25.

$$G_O = \frac{R_{OUT} \times N_{PS}}{R_{CS} \times A_{CS}} \times \frac{1}{\frac{(1-D)^2}{\tau_L} + (2 \times M) + 1} \tag{25}$$

In Equation 25, D is calculated with Equation 26, τ_L is calculated with Equation 27, and M is calculated with Equation 28.

$$D = \frac{N_{PS} \times V_{OUT}}{V_{BULKmin} + (N_{PS} \times V_{OUT})} \tag{26}$$

$$\tau_L = \frac{2 \times L_P \times f_{SW}}{R_{OUT} \times (N_{PS})^2} \tag{27}$$

$$M = \frac{V_{OUT} \times N_{PS}}{V_{BULKmin}} \tag{28}$$

For this design, a converter with an output voltage V_{OUT} of 12 V, and 48 W relates to an output load, R_{OUT}, equal to 3 Ω at full load. With a maximum duty cycle calculated to be 0.627, a current sense resistance, R_{CS}, of 0.75 Ω, and a primary to secondary turns-ratio, N_{PS}, of 10, the open-loop gain calculates to 3.082, or 9.776 dB.

A CCM flyback has two zeroes that are of interest. The ESR and the output capacitance contribute a left-half plane zero, ω_{ESRz}, to the power stage, and the frequency of this zero, f_{ESRz}, are calculated with Equation 30.

$$\omega_{ESRz} = \frac{1}{R_{ESR} \times C_{OUT}} \tag{29}$$

$$f_{ESRz} = \frac{1}{2 \times \pi \times R_{ESR} \times C_{OUT}} \tag{30}$$

The f_{ESRz} zero for an output capacitance of 2200 µF and a total ESR of 43 mΩ is located at 1.682 kHz.

Copyright © 2024 Texas Instruments Incorporated

CCM flyback converters have a zero in the right-half plane, RHP, in the transfer function. A RHP zero has the same 20 dB/decade rising gain magnitude with increasing frequency just like a left-half plane zero, but an RHP zero adds a 90° phase lag instead of lead. This phase lag tends to limit the overall loop bandwidth. The frequency location, f_{RHPz}, of the RHP zero, ω_{RHPz}, is a function of the output load, the duty cycle, the primary inductance, L_P, and the primary to secondary side turns ratio, N_{PS}.

$$\omega_{RHPz} = \frac{R_{OUT} \times (1 - D)^2 \times (N_{PS})^2}{L_P \times D} \tag{31}$$

$$f_{RHPz} = \frac{R_{OUT} \times (1 - D)^2 \times (N_{PS})^2}{2 \times \pi \times L_P \times D} \tag{32}$$

The right-half plane zero frequency increases with higher input voltage and lighter load. Generally, the design requires consideration of the worst case of the lowest right-half plane zero frequency and the converter must be compensated at the minimum input and maximum load condition. With a primary inductance of 1.5 mH, at 75-V DC input, the RHP zero frequency, f_{RHPz}, is equal to 7.07 kHz at maximum duty cycle, full load.

The power stage has one dominate pole, ω_{P1}, which is in the region of interest, located at a lower frequency, f_{P1}, which is related to the duty cycle, D, the output load, and the output capacitance, calculated with Equation 34. There is also a double pole placed at half the switching frequency of the converter, f_{P2} calculated with Equation 36. For this example, pole f_{P1} is located at 40.37 Hz and f_{P2} is at 55 kHz.

$$\omega_{P1} = \frac{\frac{(1 - D)^3}{\tau_L} + 1 + D}{R_{OUT} \times C_{OUT}} \tag{33}$$

$$f_{P1} = \frac{\frac{(1 - D)^3}{\tau_L} + 1 + D}{2 \times \pi \times R_{OUT} \times C_{OUT}} \tag{34}$$

$$\omega_{P2} = \pi \times f_{SW} \tag{35}$$

$$f_{P2} = \frac{f_{SW}}{2} \tag{36}$$

8.2.2.10.2 Slope Compensation

Slope compensation is the large signal sub-harmonic instability that can occur with duty cycles that can extend beyond 50% where the rising primary side inductor current slope can not match the falling secondary side current slope. The sub-harmonic oscillation results in an increase in the output voltage ripple and can even limit the power handling capability of the converter.

The target of slope compensation is to achieve an ideal quality coefficient, Q_P, to be equal to 1 at half of the switching frequency. The Q_P is calculated with Equation 37.

$$Q_P = \frac{1}{\pi \times [M_C \times (1 - D) - 0.5]} \tag{37}$$

In Equation 37, D is the primary side switch duty cycle and M_C is the slope compensation factor, which is defined with Equation 38.

$$M_C = \frac{S_e}{S_n} + 1 \tag{38}$$

Copyright © 2024 Texas Instruments Incorporated

In Equation 38, S_e is the compensation ramp slope and the S_n is the inductor rising slope. The optimal goal of the slope compensation is to achieve Q_P equal to 1; upon rearranging Equation 38 the ideal value of slope compensation factor is determined:

$$M_{ideal} = \frac{\frac{1}{\pi} + 0.5}{1 - D} \tag{39}$$

For this design to have adequate slope compensation, M_C must be 2.193 when D reaches the maximum value of 0.627.

The inductor rising slope, S_n, at the ISENSE pin is calculated with Equation 40.

$$S_n = \frac{V_{INmin} \times R_{CS}}{L_P} = 0.038 \frac{V}{\mu s} \tag{40}$$

The compensation slope, S_e, is calculated with Equation 41.

$$S_e = (M_C - 1) \times S_n = 44.74 \frac{mV}{\mu s} \tag{41}$$

The compensation slope is added into the system through R_{RAMP} and R_{CSF}. The C_{RAMP} is an AC-coupling capacitor that allows the voltage ramp of the oscillator to be used without adding an offset to the current sense; select a value to approximate high frequency short circuit, such as 10 nF as a starting point and make adjustments if required. The R_{RAMP} and R_{CSF} resistors form a voltage divider from the oscillator charge slope and this proportional ramp is injected into the ISENSE pin to add slope compensation. Choose the value of R_{RAMP} to be much larger than the R_{RT} resistor to avoid loading down the internal oscillator and result in a frequency shift. The oscillator charge slope is calculated using the peak-to-peak voltage of the RT/CT sawtooth waveform, V_{OSCpp}, equal to 1.7 V, and the minimum on-time, as shown in Equation 43.

$$t_{ONmin} = \frac{D}{f_{SW}} \tag{42}$$

$$S_{OSC} = \frac{V_{OSCpp}}{t_{ONmin}} = \frac{1.7\ V}{5.7\ \mu s} = 298 \frac{mV}{\mu s} \tag{43}$$

To achieve a 44.74-mV/µs compensation slope, R_{CSF} resistor is calculated with Equation 44. In this design, R_{RAMP} is selected as 24.9 kΩ, a 4.2-kΩ resistor is selected for R_{CSF}.

$$R_{CSF} = \frac{R_{RAMP}}{\frac{S_{OSC}}{S_e} - 1} \tag{44}$$

8.2.2.10.3 Open-Loop Gain

Once the power stage poles and zeros are calculated and the slope compensation is determined, the power stage open-loop gain and phase of the CCM flyback converter can be plotted as a function of frequency. The power stage transfer function can be characterized with Equation 45.

$$H_{OPEN}(s) = G_0 \times \frac{\left(1 + \frac{s(f)}{\omega_{ESRz}}\right) \times \left(1 - \frac{s(f)}{\omega_{RHPz}}\right)}{1 + \frac{s(f)}{\omega_{P1}}} \times \frac{1}{1 + \frac{s(f)}{\omega_{P2} \times Q_P} + \frac{s(f)^2}{(\omega_{P2})^2}} \tag{45}$$

The bode for the open-loop gain and phase can be plotted by using Equation 46.

$$\text{Gain}_{\text{OPEN}}(s) = 20 \times \log(|H_{\text{OPEN}}(s)|) \tag{46}$$

(see Figure 8-3 and Figure 8-4).

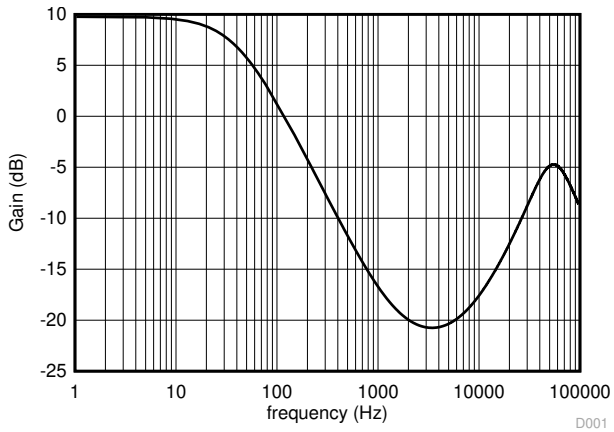

Figure 8-3. Converter Open-Loop Bode Plot - Gain

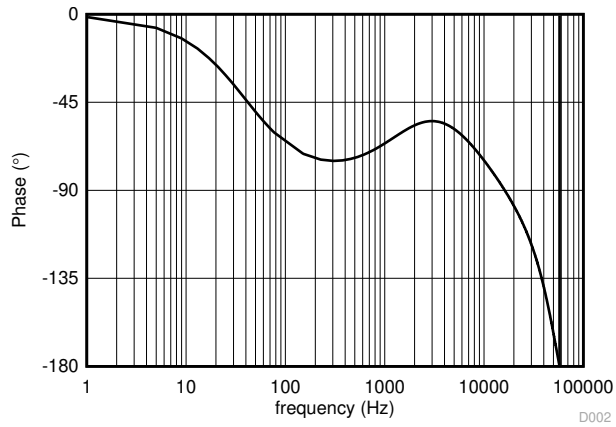

Figure 8-4. Converter Open-Loop Bode Plot - Phase

8.2.2.10.4 Compensation Loop

The design of the compensation loop involves selecting the appropriate components so that the required gain, poles, and zeros can be designed to result in a stable system over the entire operating range. There are three distinct portions of the loop: the TL431, the opto-coupler, and the error amplifier. Each of these stages is combined with the power stage to result in a stable robust system.

For good transient response, the bandwidth of the finalized design must be as large as possible. The bandwidth of a CCM flyback, f_{BW}, is limited to ¼ of the RHP zero frequency, or approximately 1.77 kHz using Equation 47.

$$f_{BW} = \frac{f_{RHPz}}{4} \tag{47}$$

The gain of the open-loop power stage at f_{BW} can be calculated using Equation 46 or can be observed on the Bode plot (Figure 8-3) and is equal to –19.55 dB and the phase at f_{BW} is equal to –58°.

The secondary side portion of the compensation loop begins with establishing the regulated steady state output voltage. To set the regulated output voltage, a TL431 adjustable precision shunt regulator is ideally suited for use on the secondary side of isolated converters due to the accurate voltage reference and internal op amp. The resistors used in the divider from the output terminals of the converter to the TL431 REF pin are selected based upon the desired power consumption. Because the REF input current for the TL431 is only 2 µA, selecting the resistors for a divider current, I_{FB_REF}, of 1 mA results in minimal error. The top divider resistor, R_{FBU}, is calculated using Equation 48:

$$R_{FBU} = \frac{V_{OUT} - REF_{TL431}}{I_{FB_REF}} \tag{48}$$

The TL431 reference voltage, REF_{TL431}, has a typical value of 2.495 V. A 9.53-kΩ resistor is chosen for R_{FBU}. To set the output voltage to 12 V, 2.49 kΩ is used for R_{FBB}.

$$R_{FBB} = \frac{REF_{TL431}}{V_{OUT} - REF_{TL431}} \times R_{FBU} \tag{49}$$

Copyright © 2024 Texas Instruments Incorporated

For good phase margin, a compensator zero, f_{COMPz}, is needed and must be placed at 1/10th the desired bandwidth:

$$f_{COMPz} = \frac{f_{BW}}{10} \tag{50}$$

$$\omega_{COMPz} = 2 \times \pi \times f_{COMPz} \tag{51}$$

With this converter, f_{COMPz} must be set at approximately 177 Hz. A series resistor, R_{COMPz}, and capacitor, C_{COMPz}, placed across the TL431 cathode to REF sets the compensator zero location. Setting C_{COMPz} to 0.01 µF, R_{COMPz} is calculated using Equation 52:

$$R_{COMPz} = \frac{1}{\omega_{COMPz} \times C_{COMPz}} \tag{52}$$

Using a standard value of 88.7 kΩ for R_Z and a 0.01 µF for C_Z results in a zero placed at 179 Hz.

Referring to Figure 8-2, R_{TLbias} provides cathode current to the TL431 from the regulated voltage provided from the Zener diode, D_{REG}. For robust performance, 10 mA is provided to bias the TL431 by way of the 10-V Zener and 1-kΩ resistor is used for R_{TLbias}.

The gain of the TL431 portion of the compensation loop can be written as:

$$G_{TL431}(s) = \left(R_{COMPz} + \frac{1}{s(f) \times C_{ZCOMPz}}\right) \times \frac{1}{R_{FBU}} \tag{53}$$

A compensation pole is needed at the frequency of right half plane zero or the ESR zero, whichever is lowest. Based previous the analysis, the right half plane zero, f_{RHPz}, is located at 7.07 kHz and the ESR zero, f_{ESRz}, is at 1.68 kHz; therefore, for this design, the compensation pole must be put at 1.68 kHz. The opto-coupler contains a parasitic pole that is difficult to characterize over frequency so the opto-coupler is set up with a pulldown resistor, R_{OPTO} equal to 1 kΩ, which moves the parasitic opto-coupler pole further out and beyond the range of interest for this design.

The required compensation pole can be added to the primary side error amplifier using R_{COMPp} and C_{COMPp}. Choosing R_{COMPp} as 10 kΩ, the required value of C_{COMPp} is determined using Equation 54.

$$C_{COMPp} = \frac{1}{2 \times \pi \times f_{ESRz} \times R_{COMPp}} = 9.46\ \text{nF} \tag{54}$$

A 10-nF capacitor is used for C_{COMPp} setting the compensation pole at 1.59 kHz.

Adding a DC gain to the primary side error amplifier can be required to obtain the required bandwidth and helps to adjust the loop gain as needed. Using a 4.99 kΩ for R_{FBG} sets the DC gain on the error amplifier to 2. At this point the gain transfer function of the error amplifier stage, $G_{EA}(s)$, of the compensation loop can be characterized:

$$G_{EA}(s) = \left(\frac{R_{COMPp}}{R_{FBG}}\right) \times \left(\frac{1}{1 + s(f) \times C_{COMPp} \times R_{COMPp}}\right) \tag{55}$$

Using an opto-coupler whose current transfer ratio (CTR) is typically at 100% in the frequency range of interest so that CTR = 1, the transfer function of the opto-coupler stage, $G_{OPTO}(s)$, is equal to:

$$G_{OPTO}(s) = \frac{CTR \times R_{OPTO}}{R_{LED}} \tag{56}$$

Copyright © 2024 Texas Instruments Incorporated

The bias resistor, R_{LED}, to the internal diode of the opto-coupler, and the pulldown resistor on the opto emitter, R_{OPTO}, sets the gain across the isolation boundary. R_{OPTO} has already been set to 1 kΩ but the value of R_{LED} has not yet been determined.

The total closed-loop gain, $G_{TOTAL}(s)$, is the combination of the open-loop power stage, $H_o(s)$, the opto gain, $G_{OPTO}(s)$, the error amplifier gain, $G_{EA}(s)$, and the gain of the TL431 stage, $G_{TL431}(s)$:

$$G_{TOTAL}(s) = |H_{OPEN}(s)| \times |G_{OPTO}(s)| \times |G_{EA}(s)| \times |G_{TL431}(s)| \tag{57}$$

The required value for R_{LED} can be selected to achieve the desired crossover frequency, f_{BW}. By setting the total loop gain equal to 1 at the desired crossover frequency and rearranging Equation 57, the optimal value for R_{LED} can be determined, as shown in Equation 58.

$$R_{LED} \leq |H_{OPEN}(s)| \times |CTR \times C_{OPTO}| \times |G_{EA}(s)| \times |G_{TL431}(s)| \tag{58}$$

A 1.3-kΩ resistor suits the requirement for R_{LED}.

Based on the compensation loop structure, the entire compensation loop transfer function is written as Equation 59.

$$G_{CLOSED}(s) = H_{OPEN}(s) \times \left(\frac{CTR \times R_{OPTO}}{R_{LED}}\right) \times \left(\frac{R_{COMPp}}{R_{FBG}}\right) \times \left(\frac{1}{1 + (s \times C_{COMPp} \times R_{COMPp})}\right) \times \left(\frac{R_{COMPz} + \left(\frac{1}{s \times C_{COMPz}}\right)}{R_{FBU}}\right) \tag{59}$$

The final closed-loop bode plots are show in Figure 8-5 and Figure 8-6. The converter achieves a crossover frequency of approximately 1.8 kHz and has a phase margin of approximately 67°.

TI recommends checking the loop stability across all the corner cases including component tolerances to provide system stability.

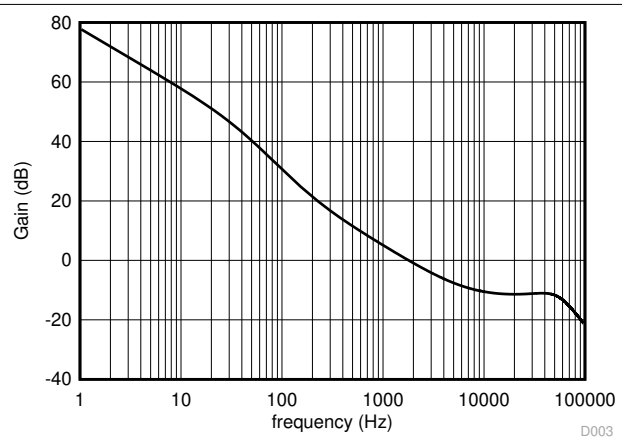

Figure 8-5. Converter Closed-Loop Bode Plot – Gain

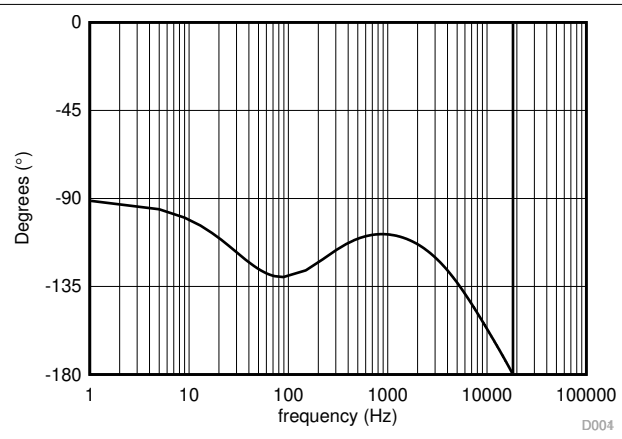

Figure 8-6. Converter Closed-Loop Bode Plot – Phase

Copyright © 2024 Texas Instruments Incorporated

8.2.3 Application Curves

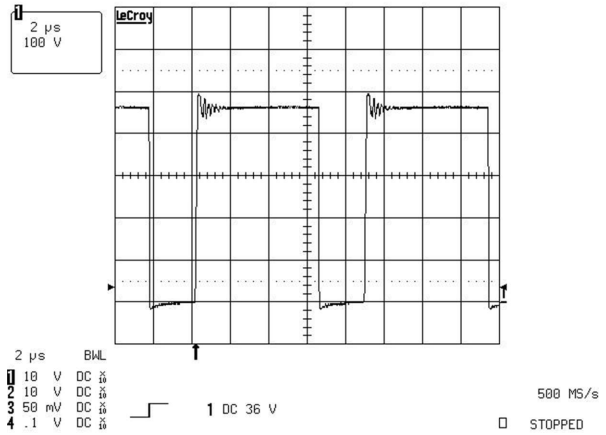

Figure 8-7. Primary Side MOSFET Drain to Source Voltage at 240-V AC Input (100 V/div)

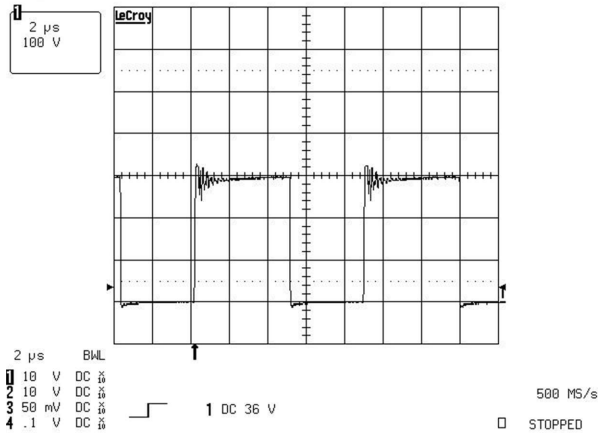

Figure 8-8. Primary Side MOSFET Drain to Source Voltage at 120-V AC Input (100 V/div)

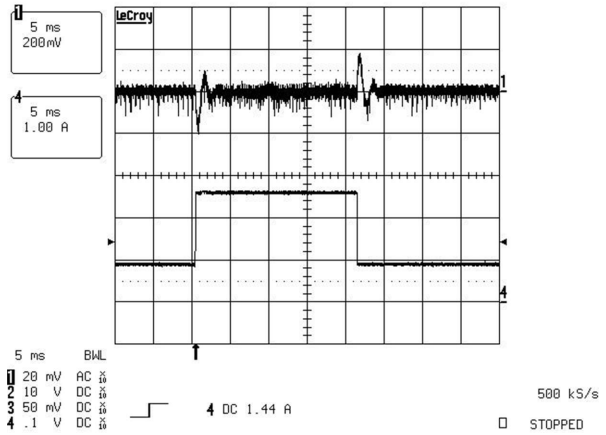

Figure 8-9. Output Voltage During 0.9-A to 2.7-A Load Transient (CH1: Output Voltage AC Coupled, 200 mV/div; CH4: Output Current, 1 A/div)

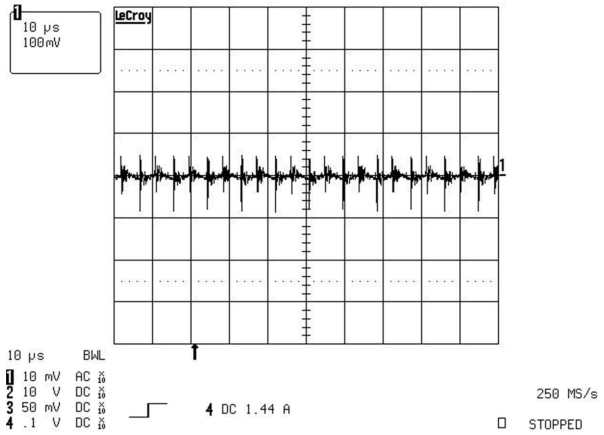

Figure 8-10. Output Voltage Ripple at Full Load (100 mV/div)

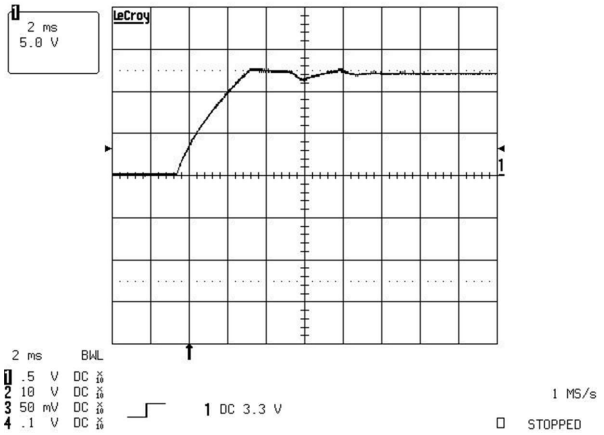

Figure 8-11. Output Voltage Behavior at Full Load Start-Up (5 V/div)

8.3 Power Supply Recommendations

Bypassing the ICs supply (VCC) and reference voltage (VREF) pins with a 0.1-μF to 1-μF ceramic capacitor to ground is important. The capacitors must be placed as close to the actual pin connections as possible for optimal noise filtering. A second, larger filter capacitor can also be required in offline applications to hold the supply voltage (VCC) above the UVLO turnoff threshold during start-up.

To prevent false triggering due to leading edge noises, an RC current sense filter can be required on ISENSE. Keep the time constant of the RC filter well below the minimum on-time pulse width.

Schottky diodes can be necessary on the OUTPUT pin to prevent overshoot and undershoot due to the high impedance to the supply rail and to ground, respectively. A bleeder resistor, placed between the gate and the source of the MOSFET must be used to prevent activating the power switch with extraneous leakage currents during undervoltage lockout.

To prevent noise problems with high-speed switching transients, bypass VREF to ground with a ceramic capacitor close to the IC package. A minimum of 0.1-μF ceramic capacitor is required. Additional VREF bypassing is required for external loads on the reference. An electrolytic capacitor can also be used in addition to the ceramic capacitor.

8.4 Layout

8.4.1 Layout Guidelines

8.4.1.1 Feedback Traces

Try to run the feedback trace as far from the inductor and noisy power traces as possible. Be as direct as possible with the feedback trace and somewhat thick. These two sometimes involve a trade-off, but keeping the trace away from EMI and other noise sources is the more critical of the two. If possible, run the feedback trace on the side of the PCB opposite of the inductor with a ground plane separating the two.

8.4.1.2 Bypass Capacitors

When using a low value ceramic bypass capacitor, the capacitor must be located as close to the VCC pin of the device as possible. This eliminates as much trace inductance effects as possible and gives the internal device rail a cleaner voltage supply. Using surface mount capacitors also reduces lead length and lessens the chance of noise coupling into the effective antenna created by through-hole components.

8.4.1.3 Compensation Components

For best stability, external compensation components can be placed close to the IC. Keep VFB lead length as short as possible and VFB stray capacitance as small as possible. Surface mount components are recommended here as well for the same reasons discussed for the filter capacitors. These can not be located very close to traces with high switching noise.

8.4.1.4 Traces and Ground Planes

Make all of the power (high current) traces as short, direct, and thick as possible. On a standard PCB board, the good practice is to make the traces an absolute minimum of 15 mils (0.381 mm) per Ampere. The inductor, output capacitors, and output diode must be as close to each other possible. This helps reduce the EMI radiated by the power traces due to the high switching currents through them. This also reduces lead inductance and resistance as well, which in turn reduces noise spikes, ringing, and resistive losses that produce voltage errors.

The grounds of the IC, input capacitors, output capacitors, and output diode (if applicable) can be connected close together directly to a ground plane. Having a ground plane on both sides of the PCB is also a good idea. This reduces noise as well by reducing ground loop errors as well as by absorbing more of the EMI radiated by the inductor. For multi-layer boards with more than two layers, a ground plane can be used to separate the power plane (where the power traces and components are) and the signal plane (where the feedback and compensation and components are) for improved performance. On multi-layer boards the use of vias is required to connect traces and different planes. Using one standard via per 200 mA of current is good practice if the trace needs to conduct a significant amount of current from one plane to the other.

Copyright © 2024 Texas Instruments Incorporated

Arrange the components so that the switching current loops curl in the same direction. Due to the way switching regulators operate, there are two power states. One state when the switch is on and one when the switch is off. During each state there is a current loop made by the power components that are currently conducting. Place the power components so that during each of the two states the current loop is conducting in the same direction. This prevents magnetic field reversal caused by the traces between the two half-cycles and reduces radiated EMI.

Copyright © 2024 Texas Instruments Incorporated

8.4.2 Layout Example

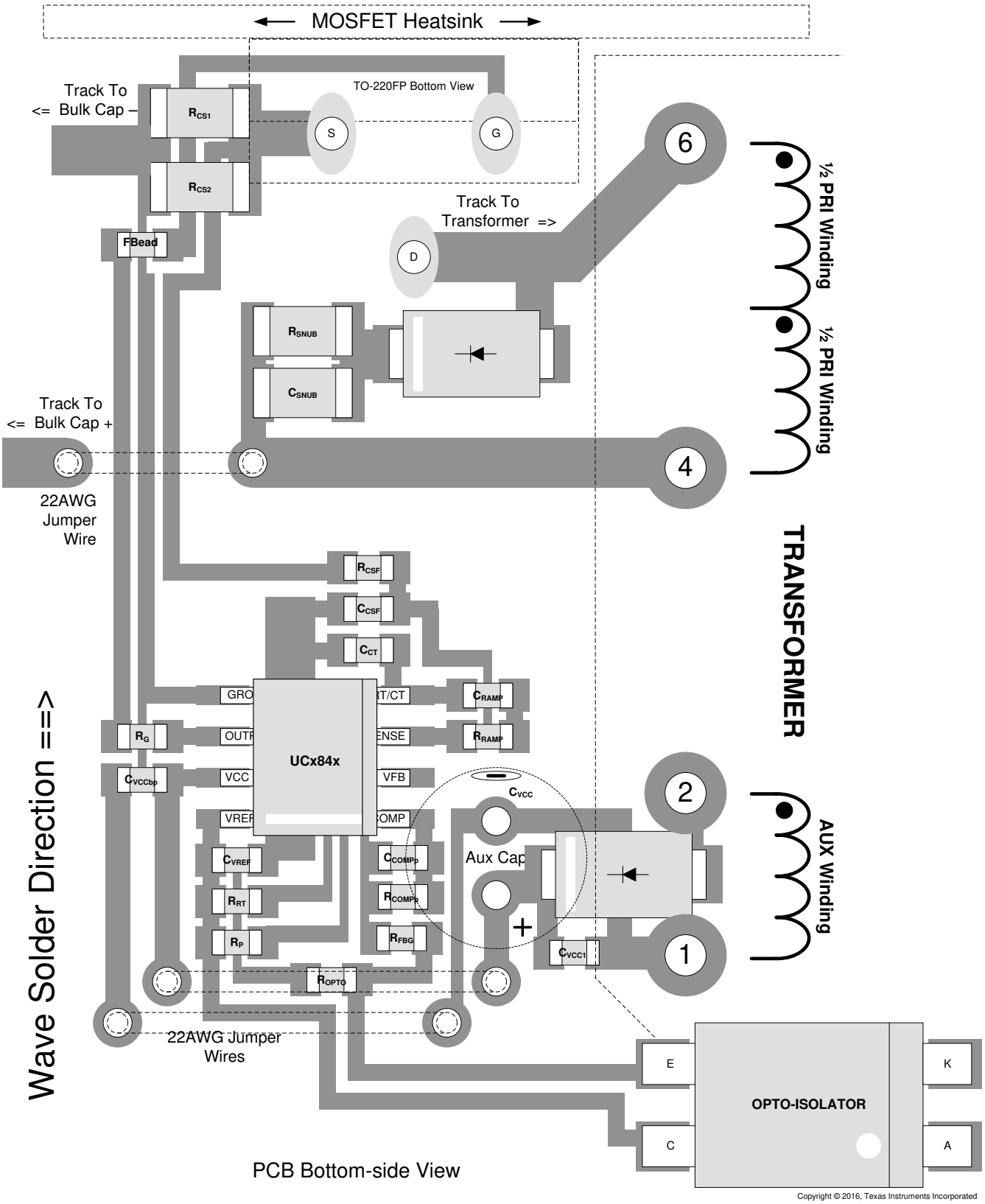

Figure 8-12. UCx84x Layout Example

Copyright © 2024 Texas Instruments Incorporated

9 Device and Documentation Support

9.1 Receiving Notification of Documentation Updates

To receive notification of documentation updates, navigate to the device product folder on ti.com. Click on *Notifications* to register and receive a weekly digest of any product information that has changed. For change details, review the revision history included in any revised document.

9.2 Support Resources

TI E2E™ support forums are an engineer's go-to source for fast, verified answers and design help — straight from the experts. Search existing answers or ask your own question to get the quick design help you need.

Linked content is provided "AS IS" by the respective contributors. They do not constitute TI specifications and do not necessarily reflect TI's views; see TI's Terms of Use.

9.3 Trademarks

TI E2E™ is a trademark of Texas Instruments.
All trademarks are the property of their respective owners.

9.4 Electrostatic Discharge Caution

This integrated circuit can be damaged by ESD. Texas Instruments recommends that all integrated circuits be handled with appropriate precautions. Failure to observe proper handling and installation procedures can cause damage.

ESD damage can range from subtle performance degradation to complete device failure. Precision integrated circuits may be more susceptible to damage because very small parametric changes could cause the device not to meet its published specifications.

9.5 Glossary

TI Glossary	This glossary lists and explains terms, acronyms, and definitions.

10 Revision History

NOTE: Page numbers for previous revisions may differ from page numbers in the current version.

Changes from Revision G (July 2022) to Revision H (October 2024) — **Page**

- Updated the numbering format for tables, figures and cross-references throughout the document..... 1
- Changed ESD ratings, CDM rating from ±3000V to ±2000V.....6
- Changed thermal information for D-8, D-14, and P-8 packages..... 6
- Changed the OUTPUT SECTION: Rise and fall time, typical value from 50ns to 25ns in the Electrical Characteristics section.....7
- Changed the PWM: maximum duty cycle of UCx842/3, minimum value from 95% to 92% in the Electrical Characteristics section.....7
- Changed the TOTAL STANDBY CURRENT, VCC Zener voltage, typical value from 34V to 39V in the Electrical Characteristics section.....7
- Updated the *Typical Characteristics* graphs for $I_{discharge}$, $t_{deadtime}$, and frequency..... 9

Changes from Revision F (April 2020) to Revision G (July 2022) — **Page**

- Updated the numbering format for tables, figures and cross-references throughout the document..... 1

Changes from Revision E (January 2017) to Revision F (April 2020) — **Page**

- Changed UVLO Table updated 7

11 Mechanical, Packaging, and Orderable Information

The following pages include mechanical, packaging, and orderable information. This information is the most current data available for the designated devices. This data is subject to change without notice and revision of this document. For browser-based versions of this data sheet, see the left-hand navigation.

Copyright © 2024 Texas Instruments Incorporated

PACKAGING INFORMATION

Orderable part number	Status (1)	Material type (2)	Package | Pins	Package qty | Carrier	RoHS (3)	Lead finish/ Ball material (4)	MSL rating/ Peak reflow (5)	Op temp (°C)	Part marking (6)
5962-8670401PA	NRND	Production	CDIP (JG) | 8	50 | TUBE	No	SNPB	N/A for Pkg Type	-55 to 125	8670401PA UC1842
5962-8670401VPA	Active	Production	CDIP (JG) | 8	50 | TUBE	No	SNPB	N/A for Pkg Type	-55 to 125	8670401VPA UC1842
5962-8670401VPA.A	Active	Production	CDIP (JG) | 8	50 | TUBE	No	SNPB	N/A for Pkg Type	-55 to 125	8670401VPA UC1842
5962-8670401XA	Active	Production	LCCC (FK) | 20	55 | TUBE	No	SNPB	N/A for Pkg Type	-55 to 125	5962-8670401XA UC1842L/ 883B
5962-8670402PA	NRND	Production	CDIP (JG) | 8	50 | TUBE	No	SNPB	N/A for Pkg Type	-55 to 125	8670402PA UC1843
5962-8670402XA	NRND	Production	LCCC (FK) | 20	55 | TUBE	No	SNPB	N/A for Pkg Type	-55 to 125	5962-8670402XA UC1843L/ 883B
5962-8670403PA	NRND	Production	CDIP (JG) | 8	50 | TUBE	No	SNPB	N/A for Pkg Type	-55 to 125	8670403PA UC1844
5962-8670403VXA	Active	Production	LCCC (FK) | 20	55 | TUBE	No	SNPB	N/A for Pkg Type	-55 to 125	5962-8670403VXA UC1844L QMLV
5962-8670403VXA.A	Active	Production	LCCC (FK) | 20	55 | TUBE	No	SNPB	N/A for Pkg Type	-55 to 125	5962-8670403VXA UC1844L QMLV
5962-8670403XA	Active	Production	LCCC (FK) | 20	55 | TUBE	No	SNPB	N/A for Pkg Type	-55 to 125	5962-8670403XA UC1844L/ 883B
5962-8670404DA	NRND	Production	CFP (W) | 14	25 | TUBE	No	SNPB	N/A for Pkg Type	See UC1845W883B	5962-8670404DA UC1845W/883B
5962-8670404PA	NRND	Production	CDIP (JG) | 8	50 | TUBE	No	SNPB	N/A for Pkg Type	-55 to 125	8670404PA UC1845

Orderable part number	Status (1)	Material type (2)	Package | Pins	Package qty | Carrier	RoHS (3)	Lead finish/ Ball material (4)	MSL rating/ Peak reflow (5)	Op temp (°C)	Part marking (6)
5962-8670404VPA	Active	Production	CDIP (JG) | 8	50 | TUBE	No	SNPB	N/A for Pkg Type	-55 to 125	8670404VPA UC1845
5962-8670404VPA.A	Active	Production	CDIP (JG) | 8	50 | TUBE	No	SNPB	N/A for Pkg Type	-55 to 125	8670404VPA UC1845
5962-8670404VXA	Active	Production	LCCC (FK) | 20	55 | TUBE	No	SNPB	N/A for Pkg Type	-55 to 125	5962-8670404VXA UC1845L QMLV
5962-8670404VXA.A	Active	Production	LCCC (FK) | 20	55 | TUBE	No	SNPB	N/A for Pkg Type	-55 to 125	5962-8670404VXA UC1845L QMLV
5962-8670404XA	NRND	Production	LCCC (FK) | 20	55 | TUBE	No	SNPB	N/A for Pkg Type	-55 to 125	5962-8670404XA UC1845L/ 883B
UC1842J	NRND	Production	CDIP (JG) | 8	50 | TUBE	No	SNPB	N/A for Pkg Type	-55 to 125	UC1842J
UC1842J.A	NRND	Production	CDIP (JG) | 8	50 | TUBE	No	SNPB	N/A for Pkg Type	-55 to 125	UC1842J
UC1842J883B	NRND	Production	CDIP (JG) | 8	50 | TUBE	No	SNPB	N/A for Pkg Type	-55 to 125	8670401PA UC1842
UC1842J883B.A	NRND	Production	CDIP (JG) | 8	50 | TUBE	No	SNPB	N/A for Pkg Type	-55 to 125	8670401PA UC1842
UC1842L883B	Active	Production	LCCC (FK) | 20	55 | TUBE	No	SNPB	N/A for Pkg Type	-55 to 125	5962-8670401XA UC1842L/ 883B
UC1842L883B.A	Active	Production	LCCC (FK) | 20	55 | TUBE	No	SNPB	N/A for Pkg Type	-55 to 125	5962-8670401XA UC1842L/ 883B
UC1842W	Active	Production	CFP (W) | 14	25 | TUBE	No	SNPB	N/A for Pkg Type	-55 to 125	UC1842W
UC1842W.A	Active	Production	CFP (W) | 14	25 | TUBE	No	SNPB	N/A for Pkg Type	-55 to 125	UC1842W
UC1843J	NRND	Production	CDIP (JG) | 8	50 | TUBE	No	SNPB	N/A for Pkg Type	-55 to 125	UC1843J
UC1843J.A	NRND	Production	CDIP (JG) | 8	50 | TUBE	No	SNPB	N/A for Pkg Type	-55 to 125	UC1843J
UC1843J883B	NRND	Production	CDIP (JG) | 8	50 | TUBE	No	SNPB	N/A for Pkg Type	-55 to 125	8670402PA UC1843

Orderable part number	Status (1)	Material type (2)	Package | Pins	Package qty | Carrier	RoHS (3)	Lead finish/ Ball material (4)	MSL rating/ Peak reflow (5)	Op temp (°C)	Part marking (6)
UC1843J883B.A	NRND	Production	CDIP (JG) | 8	50 | TUBE	No	SNPB	N/A for Pkg Type	-55 to 125	8670402PA UC1843
UC1843L	NRND	Production	LCCC (FK) | 20	55 | TUBE	No	SNPB	N/A for Pkg Type	-55 to 125	UC1843L
UC1843L.A	NRND	Production	LCCC (FK) | 20	55 | TUBE	No	SNPB	N/A for Pkg Type	-55 to 125	UC1843L
UC1843L883B	NRND	Production	LCCC (FK) | 20	55 | TUBE	No	SNPB	N/A for Pkg Type	-55 to 125	5962-8670402XA UC1843L/ 883B
UC1843L883B.A	NRND	Production	LCCC (FK) | 20	55 | TUBE	No	SNPB	N/A for Pkg Type	-55 to 125	5962-8670402XA UC1843L/ 883B
UC1844J	NRND	Production	CDIP (JG) | 8	50 | TUBE	No	SNPB	N/A for Pkg Type	-55 to 125	UC1844J
UC1844J.A	NRND	Production	CDIP (JG) | 8	50 | TUBE	No	SNPB	N/A for Pkg Type	-55 to 125	UC1844J
UC1844J883B	NRND	Production	CDIP (JG) | 8	50 | TUBE	No	SNPB	N/A for Pkg Type	-55 to 125	8670403PA UC1844
UC1844J883B.A	NRND	Production	CDIP (JG) | 8	50 | TUBE	No	SNPB	N/A for Pkg Type	-55 to 125	8670403PA UC1844
UC1844L883B	Active	Production	LCCC (FK) | 20	55 | TUBE	No	SNPB	N/A for Pkg Type	-55 to 125	5962-8670403XA UC1844L/ 883B
UC1844L883B.A	Active	Production	LCCC (FK) | 20	55 | TUBE	No	SNPB	N/A for Pkg Type	-55 to 125	5962-8670403XA UC1844L/ 883B
UC1845J	NRND	Production	CDIP (JG) | 8	50 | TUBE	No	SNPB	N/A for Pkg Type	-55 to 125	UC1845J
UC1845J.A	NRND	Production	CDIP (JG) | 8	50 | TUBE	No	SNPB	N/A for Pkg Type	-55 to 125	UC1845J
UC1845J883B	NRND	Production	CDIP (JG) | 8	50 | TUBE	No	SNPB	N/A for Pkg Type	-55 to 125	8670404PA UC1845
UC1845J883B.A	NRND	Production	CDIP (JG) | 8	50 | TUBE	No	SNPB	N/A for Pkg Type	-55 to 125	8670404PA UC1845
UC1845L	NRND	Production	LCCC (FK) | 20	55 | TUBE	No	SNPB	N/A for Pkg Type	-55 to 125	UC1845L
UC1845L.A	NRND	Production	LCCC (FK) | 20	55 | TUBE	No	SNPB	N/A for Pkg Type	-55 to 125	UC1845L

Orderable part number	Status (1)	Material type (2)	Package | Pins	Package qty | Carrier	RoHS (3)	Lead finish/ Ball material (4)	MSL rating/ Peak reflow (5)	Op temp (°C)	Part marking (6)
UC1845L883B	NRND	Production	LCCC (FK) | 20	55 | TUBE	No	SNPB	N/A for Pkg Type	-55 to 125	5962-8670404XA UC1845L/ 883B
UC1845L883B.A	NRND	Production	LCCC (FK) | 20	55 | TUBE	No	SNPB	N/A for Pkg Type	-55 to 125	5962-8670404XA UC1845L/ 883B
UC1845W	Active	Production	CFP (W) | 14	25 | TUBE	No	SNPB	N/A for Pkg Type	-55 to 125	UC1845W
UC1845W.A	Active	Production	CFP (W) | 14	25 | TUBE	No	SNPB	N/A for Pkg Type	-55 to 125	UC1845W
UC1845W883B	NRND	Production	CFP (W) | 14	25 | TUBE	No	SNPB	N/A for Pkg Type	-	5962-8670404DA UC1845W/883B
UC1845W883B.A	NRND	Production	CFP (W) | 14	25 | TUBE	No	SNPB	N/A for Pkg Type	-55 to 125	5962-8670404DA UC1845W/883B
UC2842D	Active	Production	SOIC (D) | 14	50 | TUBE	Yes	NIPDAU	Level-1-260C-UNLIM	-40 to 85	UC2842D
UC2842D.A	Active	Production	SOIC (D) | 14	50 | TUBE	Yes	NIPDAU	Level-1-260C-UNLIM	-40 to 85	UC2842D
UC2842D8	Active	Production	SOIC (D) | 8	75 | TUBE	Yes	NIPDAU	Level-1-260C-UNLIM	-40 to 85	UC2842
UC2842D8.A	Active	Production	SOIC (D) | 8	75 | TUBE	Yes	NIPDAU	Level-1-260C-UNLIM	-40 to 85	UC2842
UC2842D8G4	Active	Production	SOIC (D) | 8	75 | TUBE	Yes	NIPDAU	Level-1-260C-UNLIM	-40 to 85	UC2842
UC2842D8TR	NRND	Production	SOIC (D) | 8	2500 | LARGE T&R	Yes	NIPDAU	Level-1-260C-UNLIM	-40 to 85	UC2842
UC2842D8TR.A	NRND	Production	SOIC (D) | 8	2500 | LARGE T&R	Yes	NIPDAU	Level-1-260C-UNLIM	-40 to 85	UC2842
UC2842DTR	Active	Production	SOIC (D) | 14	2500 | LARGE T&R	Yes	NIPDAU	Level-1-260C-UNLIM	-40 to 85	UC2842D
UC2842DTR.A	Active	Production	SOIC (D) | 14	2500 | LARGE T&R	Yes	NIPDAU	Level-1-260C-UNLIM	-40 to 85	UC2842D
UC2842N	NRND	Production	PDIP (P) | 8	50 | TUBE	Yes	NIPDAU	N/A for Pkg Type	-40 to 85	UC2842N
UC2842N.A	NRND	Production	PDIP (P) | 8	50 | TUBE	Yes	NIPDAU	N/A for Pkg Type	-40 to 85	UC2842N
UC2842NG4	NRND	Production	PDIP (P) | 8	50 | TUBE	Yes	NIPDAU	N/A for Pkg Type	-40 to 85	UC2842N
UC2843D	Active	Production	SOIC (D) | 14	50 | TUBE	Yes	NIPDAU	Level-1-260C-UNLIM	-40 to 85	UC2843D
UC2843D.A	Active	Production	SOIC (D) | 14	50 | TUBE	Yes	NIPDAU	Level-1-260C-UNLIM	-40 to 85	UC2843D
UC2843D8	Obsolete	Production	SOIC (D) | 8	-	-	Call TI	Call TI	-40 to 85	UC2843
UC2843D8TR	Active	Production	SOIC (D) | 8	2500 | LARGE T&R	Yes	NIPDAU	Level-1-260C-UNLIM	-40 to 85	UC2843
UC2843D8TR.A	Active	Production	SOIC (D) | 8	2500 | LARGE T&R	Yes	NIPDAU	Level-1-260C-UNLIM	-40 to 85	UC2843
UC2843D8TRG4	Active	Production	SOIC (D) | 8	2500 | LARGE T&R	Yes	NIPDAU	Level-1-260C-UNLIM	-40 to 85	UC2843
UC2843DG4	Active	Production	SOIC (D) | 14	50 | TUBE	Yes	NIPDAU	Level-1-260C-UNLIM	-40 to 85	UC2843D

Orderable part number	Status (1)	Material type (2)	Package | Pins	Package qty | Carrier	RoHS (3)	Lead finish/ Ball material (4)	MSL rating/ Peak reflow (5)	Op temp (°C)	Part marking (6)
UC2843DTR	NRND	Production	SOIC (D) | 14	2500 | LARGE T&R	Yes	NIPDAU	Level-1-260C-UNLIM	-40 to 85	UC2843D
UC2843DTR.A	NRND	Production	SOIC (D) | 14	2500 | LARGE T&R	Yes	NIPDAU	Level-1-260C-UNLIM	-40 to 85	UC2843D
UC2843N	NRND	Production	PDIP (P) | 8	50 | TUBE	Yes	NIPDAU	N/A for Pkg Type	-40 to 85	UC2843N
UC2843N.A	NRND	Production	PDIP (P) | 8	50 | TUBE	Yes	NIPDAU	N/A for Pkg Type	-40 to 85	UC2843N
UC2843NG4	NRND	Production	PDIP (P) | 8	50 | TUBE	Yes	NIPDAU	N/A for Pkg Type	-40 to 85	UC2843N
UC2844D	Obsolete	Production	SOIC (D) | 14	-	-	Call TI	Call TI	-40 to 85	UC2844D
UC2844D8	Obsolete	Production	SOIC (D) | 8	-	-	Call TI	Call TI	-40 to 85	UC2844
UC2844D8TR	Active	Production	SOIC (D) | 8	2500 | LARGE T&R	Yes	NIPDAU	Level-1-260C-UNLIM	-40 to 85	UC2844
UC2844D8TR.A	Active	Production	SOIC (D) | 8	2500 | LARGE T&R	Yes	NIPDAU	Level-1-260C-UNLIM	-40 to 85	UC2844
UC2844DTR	Active	Production	SOIC (D) | 14	2500 | LARGE T&R	Yes	NIPDAU	Level-1-260C-UNLIM	-40 to 85	UC2844D
UC2844DTR.A	Active	Production	SOIC (D) | 14	2500 | LARGE T&R	Yes	NIPDAU	Level-1-260C-UNLIM	-40 to 85	UC2844D
UC2844N	Active	Production	PDIP (P) | 8	50 | TUBE	Yes	NIPDAU	N/A for Pkg Type	-40 to 85	UC2844N
UC2844N.A	Active	Production	PDIP (P) | 8	50 | TUBE	Yes	NIPDAU	N/A for Pkg Type	-40 to 85	UC2844N
UC2844NG4	Active	Production	PDIP (P) | 8	50 | TUBE	Yes	NIPDAU	N/A for Pkg Type	-40 to 85	UC2844N
UC2845D	Active	Production	SOIC (D) | 14	50 | TUBE	Yes	NIPDAU	Level-1-260C-UNLIM	-40 to 85	UC2845D
UC2845D.A	Active	Production	SOIC (D) | 14	50 | TUBE	Yes	NIPDAU	Level-1-260C-UNLIM	-40 to 85	UC2845D
UC2845D8	Obsolete	Production	SOIC (D) | 8	-	-	Call TI	Call TI	-40 to 85	UC2845
UC2845D8TR	Active	Production	SOIC (D) | 8	2500 | LARGE T&R	Yes	NIPDAU	Level-1-260C-UNLIM	-40 to 85	UC2845
UC2845D8TR.A	Active	Production	SOIC (D) | 8	2500 | LARGE T&R	Yes	NIPDAU	Level-1-260C-UNLIM	-40 to 85	UC2845
UC2845D8TRG4	Active	Production	SOIC (D) | 8	2500 | LARGE T&R	Yes	NIPDAU	Level-1-260C-UNLIM	-40 to 85	UC2845
UC2845DG4	Active	Production	SOIC (D) | 14	50 | TUBE	Yes	NIPDAU	Level-1-260C-UNLIM	-40 to 85	UC2845D
UC2845DTR	Active	Production	SOIC (D) | 14	2500 | LARGE T&R	Yes	NIPDAU	Level-1-260C-UNLIM	-40 to 85	UC2845D
UC2845DTR.A	Active	Production	SOIC (D) | 14	2500 | LARGE T&R	Yes	NIPDAU	Level-1-260C-UNLIM	-40 to 85	UC2845D
UC2845N	NRND	Production	PDIP (P) | 8	50 | TUBE	Yes	NIPDAU	N/A for Pkg Type	-40 to 85	UC2845N
UC2845N.A	NRND	Production	PDIP (P) | 8	50 | TUBE	Yes	NIPDAU	N/A for Pkg Type	-40 to 85	UC2845N
UC2845NG4	NRND	Production	PDIP (P) | 8	50 | TUBE	Yes	NIPDAU	N/A for Pkg Type	-40 to 85	UC2845N
UC3842D	Active	Production	SOIC (D) | 14	50 | TUBE	Yes	NIPDAU	Level-1-260C-UNLIM	0 to 70	UC3842D
UC3842D.A	Active	Production	SOIC (D) | 14	50 | TUBE	Yes	NIPDAU	Level-1-260C-UNLIM	0 to 70	UC3842D
UC3842D8	Active	Production	SOIC (D) | 8	75 | TUBE	Yes	NIPDAU	Level-1-260C-UNLIM	0 to 70	UC3842
UC3842D8.A	Active	Production	SOIC (D) | 8	75 | TUBE	Yes	NIPDAU	Level-1-260C-UNLIM	0 to 70	UC3842
UC3842D8TR	NRND	Production	SOIC (D) | 8	2500 | LARGE T&R	Yes	NIPDAU	Level-1-260C-UNLIM	0 to 70	UC3842

Orderable part number	Status (1)	Material type (2)	Package | Pins	Package qty | Carrier	RoHS (3)	Lead finish/ Ball material (4)	MSL rating/ Peak reflow (5)	Op temp (°C)	Part marking (6)
UC3842D8TR.A	NRND	Production	SOIC (D) | 8	2500 | LARGE T&R	Yes	NIPDAU	Level-1-260C-UNLIM	0 to 70	UC3842
UC3842DTR	Active	Production	SOIC (D) | 14	2500 | LARGE T&R	Yes	NIPDAU	Level-1-260C-UNLIM	0 to 70	UC3842D
UC3842DTR.A	Active	Production	SOIC (D) | 14	2500 | LARGE T&R	Yes	NIPDAU	Level-1-260C-UNLIM	0 to 70	UC3842D
UC3842N	NRND	Production	PDIP (P) | 8	50 | TUBE	Yes	NIPDAU	N/A for Pkg Type	0 to 70	UC3842N
UC3842N.A	NRND	Production	PDIP (P) | 8	50 | TUBE	Yes	NIPDAU	N/A for Pkg Type	0 to 70	UC3842N
UC3842NG4	NRND	Production	PDIP (P) | 8	50 | TUBE	Yes	NIPDAU	N/A for Pkg Type	0 to 70	UC3842N
UC3843D	NRND	Production	SOIC (D) | 14	50 | TUBE	Yes	NIPDAU	Level-1-260C-UNLIM	0 to 70	UC3843D
UC3843D.A	NRND	Production	SOIC (D) | 14	50 | TUBE	Yes	NIPDAU	Level-1-260C-UNLIM	0 to 70	UC3843D
UC3843D8	NRND	Production	SOIC (D) | 8	75 | TUBE	Yes	NIPDAU	Level-1-260C-UNLIM	0 to 70	UC3843
UC3843D8.A	NRND	Production	SOIC (D) | 8	75 | TUBE	Yes	NIPDAU	Level-1-260C-UNLIM	0 to 70	UC3843
UC3843D8G4	NRND	Production	SOIC (D) | 8	75 | TUBE	Yes	NIPDAU	Level-1-260C-UNLIM	0 to 70	UC3843
UC3843D8TR	Active	Production	SOIC (D) | 8	2500 | LARGE T&R	Yes	NIPDAU	Level-1-260C-UNLIM	0 to 70	UC3843
UC3843D8TR.A	Active	Production	SOIC (D) | 8	2500 | LARGE T&R	Yes	NIPDAU	Level-1-260C-UNLIM	0 to 70	UC3843
UC3843D8TRG4	Active	Production	SOIC (D) | 8	2500 | LARGE T&R	Yes	NIPDAU	Level-1-260C-UNLIM	0 to 70	UC3843
UC3843DG4	NRND	Production	SOIC (D) | 14	50 | TUBE	Yes	NIPDAU	Level-1-260C-UNLIM	0 to 70	UC3843D
UC3843DTR	Active	Production	SOIC (D) | 14	2500 | LARGE T&R	Yes	NIPDAU	Level-1-260C-UNLIM	0 to 70	UC3843D
UC3843DTR.A	Active	Production	SOIC (D) | 14	2500 | LARGE T&R	Yes	NIPDAU	Level-1-260C-UNLIM	0 to 70	UC3843D
UC3843N	NRND	Production	PDIP (P) | 8	50 | TUBE	Yes	NIPDAU	N/A for Pkg Type	0 to 70	UC3843N
UC3843N.A	NRND	Production	PDIP (P) | 8	50 | TUBE	Yes	NIPDAU	N/A for Pkg Type	0 to 70	UC3843N
UC3843NG4	NRND	Production	PDIP (P) | 8	50 | TUBE	Yes	NIPDAU	N/A for Pkg Type	0 to 70	UC3843N
UC3844D	Active	Production	SOIC (D) | 14	50 | TUBE	Yes	NIPDAU	Level-1-260C-UNLIM	0 to 70	UC3844D
UC3844D.A	Active	Production	SOIC (D) | 14	50 | TUBE	Yes	NIPDAU	Level-1-260C-UNLIM	0 to 70	UC3844D
UC3844D8	Active	Production	SOIC (D) | 8	75 | TUBE	Yes	NIPDAU	Level-1-260C-UNLIM	0 to 70	UC3844
UC3844D8.A	Active	Production	SOIC (D) | 8	75 | TUBE	Yes	NIPDAU	Level-1-260C-UNLIM	0 to 70	UC3844
UC3844D8TR	Active	Production	SOIC (D) | 8	2500 | LARGE T&R	Yes	NIPDAU	Level-1-260C-UNLIM	0 to 70	UC3844
UC3844D8TR.A	Active	Production	SOIC (D) | 8	2500 | LARGE T&R	Yes	NIPDAU	Level-1-260C-UNLIM	0 to 70	UC3844
UC3844DTR	Active	Production	SOIC (D) | 14	2500 | LARGE T&R	Yes	NIPDAU	Level-1-260C-UNLIM	0 to 70	UC3844D
UC3844DTR.A	Active	Production	SOIC (D) | 14	2500 | LARGE T&R	Yes	NIPDAU	Level-1-260C-UNLIM	0 to 70	UC3844D
UC3844DTRG4	Active	Production	SOIC (D) | 14	2500 | LARGE T&R	Yes	NIPDAU	Level-1-260C-UNLIM	0 to 70	UC3844D
UC3844N	Active	Production	PDIP (P) | 8	50 | TUBE	Yes	NIPDAU	N/A for Pkg Type	0 to 70	UC3844N
UC3844N.A	Active	Production	PDIP (P) | 8	50 | TUBE	Yes	NIPDAU	N/A for Pkg Type	0 to 70	UC3844N

Orderable part number	Status (1)	Material type (2)	Package | Pins	Package qty | Carrier	RoHS (3)	Lead finish/ Ball material (4)	MSL rating/ Peak reflow (5)	Op temp (°C)	Part marking (6)
UC3844NG4	Active	Production	PDIP (P) | 8	50 | TUBE	Yes	NIPDAU	N/A for Pkg Type	0 to 70	UC3844N
UC3845AJ	NRND	Production	CDIP (JG) | 8	50 | TUBE	No	SNPB	N/A for Pkg Type	0 to 70	UC3845AJ
UC3845AJ.A	NRND	Production	CDIP (JG) | 8	50 | TUBE	No	SNPB	N/A for Pkg Type	0 to 70	UC3845AJ
UC3845D	Active	Production	SOIC (D) | 14	50 | TUBE	Yes	NIPDAU	Level-1-260C-UNLIM	0 to 70	UC3845D
UC3845D.A	Active	Production	SOIC (D) | 14	50 | TUBE	Yes	NIPDAU	Level-1-260C-UNLIM	0 to 70	UC3845D
UC3845D8	Obsolete	Production	SOIC (D) | 8	-	-	Call TI	Call TI	0 to 70	UC3845
UC3845D8TR	Active	Production	SOIC (D) | 8	2500 | LARGE T&R	Yes	NIPDAU	Level-1-260C-UNLIM	0 to 70	UC3845
UC3845D8TR.A	Active	Production	SOIC (D) | 8	2500 | LARGE T&R	Yes	NIPDAU	Level-1-260C-UNLIM	0 to 70	UC3845
UC3845D8TRG4	Active	Production	SOIC (D) | 8	2500 | LARGE T&R	Yes	NIPDAU	Level-1-260C-UNLIM	0 to 70	UC3845
UC3845DG4	Active	Production	SOIC (D) | 14	50 | TUBE	Yes	NIPDAU	Level-1-260C-UNLIM	0 to 70	UC3845D
UC3845DTR	NRND	Production	SOIC (D) | 14	2500 | LARGE T&R	Yes	NIPDAU	Level-1-260C-UNLIM	0 to 70	UC3845D
UC3845DTR.A	NRND	Production	SOIC (D) | 14	2500 | LARGE T&R	Yes	NIPDAU	Level-1-260C-UNLIM	0 to 70	UC3845D
UC3845N	NRND	Production	PDIP (P) | 8	50 | TUBE	Yes	NIPDAU	N/A for Pkg Type	0 to 70	UC3845N
UC3845N.A	NRND	Production	PDIP (P) | 8	50 | TUBE	Yes	NIPDAU	N/A for Pkg Type	0 to 70	UC3845N
UC3845NG4	NRND	Production	PDIP (P) | 8	50 | TUBE	Yes	NIPDAU	N/A for Pkg Type	0 to 70	UC3845N

(1) **Status:** For more details on status, see our product life cycle.

(2) **Material type:** When designated, preproduction parts are prototypes/experimental devices, and are not yet approved or released for full production. Testing and final process, including without limitation quality assurance, reliability performance testing, and/or process qualification, may not yet be complete, and this item is subject to further changes or possible discontinuation. If available for ordering, purchases will be subject to an additional waiver at checkout, and are intended for early internal evaluation purposes only. These items are sold without warranties of any kind.

(3) **RoHS values:** Yes, No, RoHS Exempt. See the TI RoHS Statement for additional information and value definition.

(4) **Lead finish/Ball material:** Parts may have multiple material finish options. Finish options are separated by a vertical ruled line. Lead finish/Ball material values may wrap to two lines if the finish value exceeds the maximum column width.

(5) **MSL rating/Peak reflow:** The moisture sensitivity level ratings and peak solder (reflow) temperatures. In the event that a part has multiple moisture sensitivity ratings, only the lowest level per JEDEC standards is shown. Refer to the shipping label for the actual reflow temperature that will be used to mount the part to the printed circuit board.

(6) **Part marking:** There may be an additional marking, which relates to the logo, the lot trace code information, or the environmental category of the part.

Multiple part markings will be inside parentheses. Only one part marking contained in parentheses and separated by a "~" will appear on a part. If a line is indented then it is a continuation of the previous line and the two combined represent the entire part marking for that device.

Important Information and Disclaimer: The information provided on this page represents TI's knowledge and belief as of the date that it is provided. TI bases its knowledge and belief on information provided by third parties, and makes no representation or warranty as to the accuracy of such information. Efforts are underway to better integrate information from third parties. TI has taken and continues to take reasonable steps to provide representative and accurate information but may not have conducted destructive testing or chemical analysis on incoming materials and chemicals. TI and TI suppliers consider certain information to be proprietary, and thus CAS numbers and other limited information may not be available for release.

In no event shall TI's liability arising out of such information exceed the total purchase price of the TI part(s) at issue in this document sold by TI to Customer on an annual basis.

OTHER QUALIFIED VERSIONS OF UC1842, UC1842-SP, UC1843, UC1844, UC1844-SP, UC1845, UC1845-SP, UC3842, UC3843, UC3844, UC3845, UC3845AM :

- Catalog : UC3842, UC1842, UC3843, UC3844, UC1844, UC3845, UC1845, UC3842M, UC3845A
- Enhanced Product : UC1845A-EP
- Military : UC1842, UC1843, UC1844, UC1845, UC1845A
- Space : UC1842-SP, UC1843-SP, UC1844-SP, UC1845-SP, UC1845A-SP

NOTE: Qualified Version Definitions:

- Catalog - TI's standard catalog product
- Enhanced Product - Supports Defense, Aerospace and Medical Applications
- Military - QML certified for Military and Defense Applications
- Space - Radiation tolerant, ceramic packaging and qualified for use in Space-based application

TAPE AND REEL INFORMATION

REEL DIMENSIONS

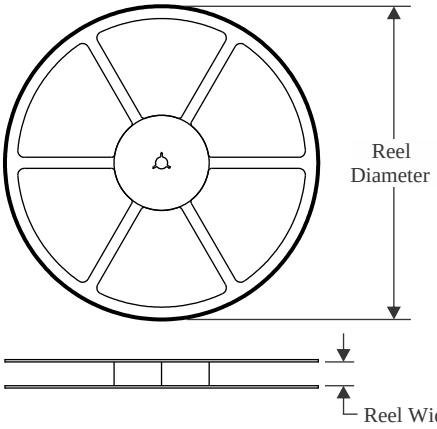

TAPE DIMENSIONS

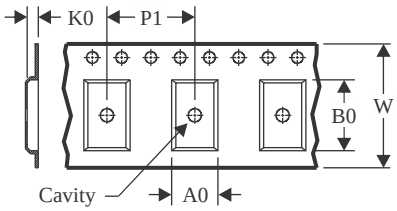

A0	Dimension designed to accommodate the component width
B0	Dimension designed to accommodate the component length
K0	Dimension designed to accommodate the component thickness
W	Overall width of the carrier tape
P1	Pitch between successive cavity centers

QUADRANT ASSIGNMENTS FOR PIN 1 ORIENTATION IN TAPE

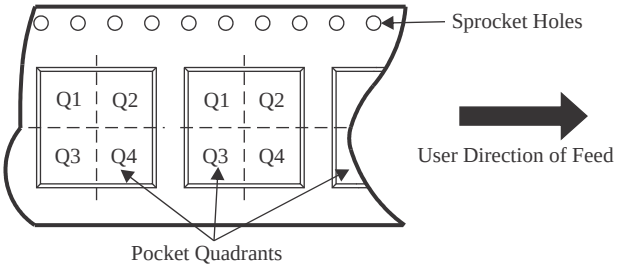

*All dimensions are nominal

Device	Package Type	Package Drawing	Pins	SPQ	Reel Diameter (mm)	Reel Width W1 (mm)	A0 (mm)	B0 (mm)	K0 (mm)	P1 (mm)	W (mm)	Pin1 Quadrant
UC2842D8TR	SOIC	D	8	2500	330.0	12.4	6.4	5.2	2.1	8.0	12.0	Q1
UC2842DTR	SOIC	D	14	2500	330.0	16.4	6.5	9.0	2.1	8.0	16.0	Q1
UC2843D8TR	SOIC	D	8	2500	330.0	12.4	6.4	5.2	2.1	8.0	12.0	Q1
UC2843DTR	SOIC	D	14	2500	330.0	16.4	6.5	9.0	2.1	8.0	16.0	Q1
UC2844D8TR	SOIC	D	8	2500	330.0	12.4	6.4	5.2	2.1	8.0	12.0	Q1
UC2844DTR	SOIC	D	14	2500	330.0	16.4	6.5	9.0	2.1	8.0	16.0	Q1
UC2845D8TR	SOIC	D	8	2500	330.0	12.4	6.4	5.2	2.1	8.0	12.0	Q1
UC2845DTR	SOIC	D	14	2500	330.0	16.4	6.5	9.0	2.1	8.0	16.0	Q1
UC3842D8TR	SOIC	D	8	2500	330.0	12.4	6.4	5.2	2.1	8.0	12.0	Q1
UC3842DTR	SOIC	D	14	2500	330.0	16.4	6.5	9.0	2.1	8.0	16.0	Q1
UC3843D8TR	SOIC	D	8	2500	330.0	12.4	6.4	5.2	2.1	8.0	12.0	Q1
UC3843DTR	SOIC	D	14	2500	330.0	16.4	6.5	9.0	2.1	8.0	16.0	Q1
UC3844D8TR	SOIC	D	8	2500	330.0	12.4	6.4	5.2	2.1	8.0	12.0	Q1
UC3844DTR	SOIC	D	14	2500	330.0	16.4	6.5	9.0	2.1	8.0	16.0	Q1
UC3845D8TR	SOIC	D	8	2500	330.0	12.4	6.4	5.2	2.1	8.0	12.0	Q1
UC3845DTR	SOIC	D	14	2500	330.0	16.4	6.5	9.0	2.1	8.0	16.0	Q1

TAPE AND REEL BOX DIMENSIONS

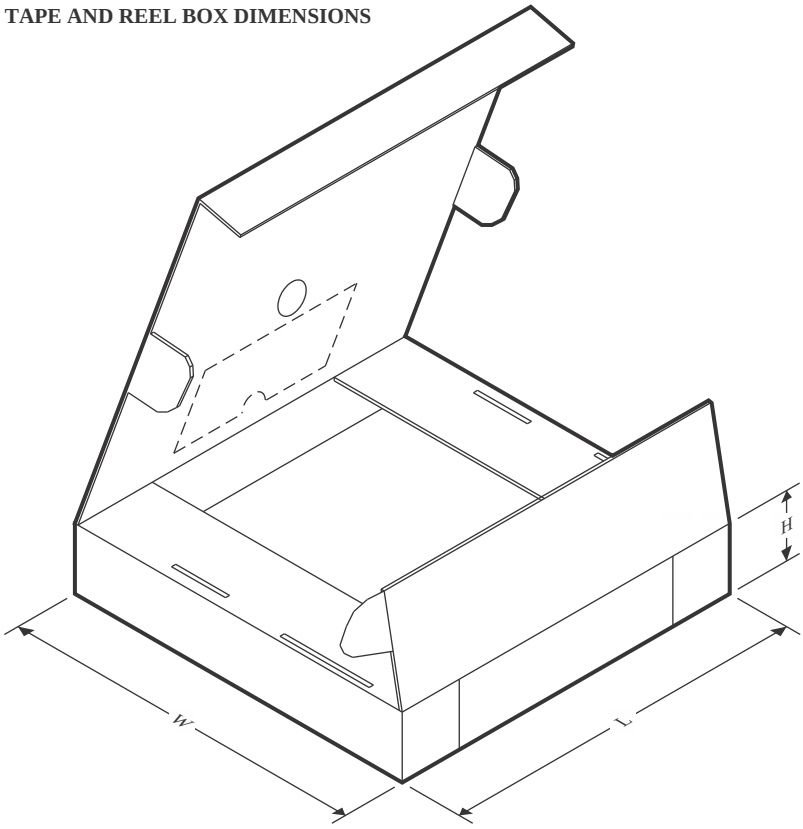

*All dimensions are nominal

Device	Package Type	Package Drawing	Pins	SPQ	Length (mm)	Width (mm)	Height (mm)
UC2842D8TR	SOIC	D	8	2500	353.0	353.0	32.0
UC2842DTR	SOIC	D	14	2500	340.5	336.1	32.0
UC2843D8TR	SOIC	D	8	2500	353.0	353.0	32.0
UC2843DTR	SOIC	D	14	2500	353.0	353.0	32.0
UC2844D8TR	SOIC	D	8	2500	353.0	353.0	32.0
UC2844DTR	SOIC	D	14	2500	353.0	353.0	32.0
UC2845D8TR	SOIC	D	8	2500	353.0	353.0	32.0
UC2845DTR	SOIC	D	14	2500	353.0	353.0	32.0
UC3842D8TR	SOIC	D	8	2500	353.0	353.0	32.0
UC3842DTR	SOIC	D	14	2500	340.5	336.1	32.0
UC3843D8TR	SOIC	D	8	2500	353.0	353.0	32.0
UC3843DTR	SOIC	D	14	2500	353.0	353.0	32.0
UC3844D8TR	SOIC	D	8	2500	353.0	353.0	32.0
UC3844DTR	SOIC	D	14	2500	353.0	353.0	32.0
UC3845D8TR	SOIC	D	8	2500	353.0	353.0	32.0
UC3845DTR	SOIC	D	14	2500	353.0	353.0	32.0

TUBE

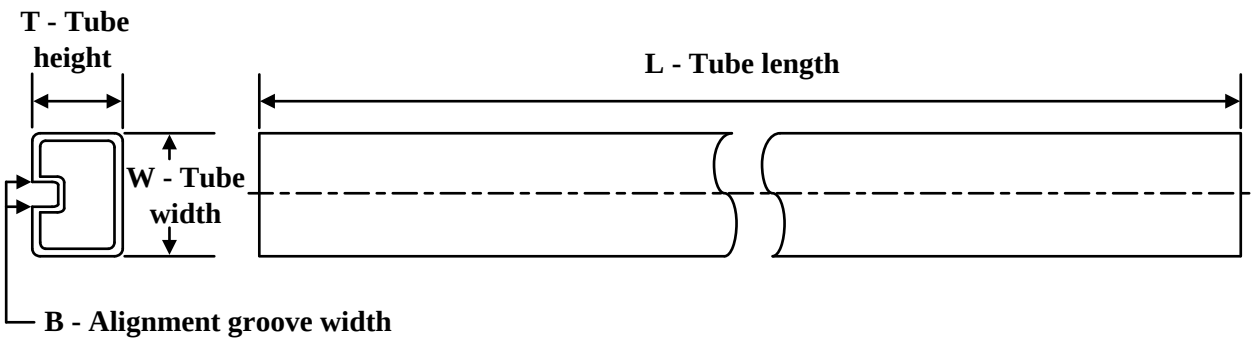

*All dimensions are nominal

Device	Package Name	Package Type	Pins	SPQ	L (mm)	W (mm)	T (µm)	B (mm)
5962-8670401XA	FK	LCCC	20	55	506.98	12.06	2030	NA
5962-8670402XA	FK	LCCC	20	55	506.98	12.06	2030	NA
5962-8670403VXA	FK	LCCC	20	55	506.98	12.06	2030	NA
5962-8670403VXA.A	FK	LCCC	20	55	506.98	12.06	2030	NA
5962-8670403XA	FK	LCCC	20	55	506.98	12.06	2030	NA
5962-8670404DA	W	CFP	14	25	506.98	26.16	6220	NA
5962-8670404VXA	FK	LCCC	20	55	506.98	12.06	2030	NA
5962-8670404VXA.A	FK	LCCC	20	55	506.98	12.06	2030	NA
5962-8670404XA	FK	LCCC	20	55	506.98	12.06	2030	NA
UC1842L883B	FK	LCCC	20	55	506.98	12.06	2030	NA
UC1842L883B.A	FK	LCCC	20	55	506.98	12.06	2030	NA
UC1842W	W	CFP	14	25	506.98	26.16	6220	NA
UC1842W.A	W	CFP	14	25	506.98	26.16	6220	NA
UC1843L	FK	LCCC	20	55	506.98	12.06	2030	NA
UC1843L.A	FK	LCCC	20	55	506.98	12.06	2030	NA
UC1843L883B	FK	LCCC	20	55	506.98	12.06	2030	NA
UC1843L883B.A	FK	LCCC	20	55	506.98	12.06	2030	NA
UC1844L883B	FK	LCCC	20	55	506.98	12.06	2030	NA
UC1844L883B.A	FK	LCCC	20	55	506.98	12.06	2030	NA
UC1845L	FK	LCCC	20	55	506.98	12.06	2030	NA
UC1845L.A	FK	LCCC	20	55	506.98	12.06	2030	NA
UC1845L883B	FK	LCCC	20	55	506.98	12.06	2030	NA
UC1845L883B.A	FK	LCCC	20	55	506.98	12.06	2030	NA
UC1845W	W	CFP	14	25	506.98	26.16	6220	NA
UC1845W.A	W	CFP	14	25	506.98	26.16	6220	NA
UC1845W883B	W	CFP	14	25	506.98	26.16	6220	NA
UC1845W883B.A	W	CFP	14	25	506.98	26.16	6220	NA
UC2842D	D	SOIC	14	50	507	8	3940	4.32
UC2842D.A	D	SOIC	14	50	507	8	3940	4.32

Device	Package Name	Package Type	Pins	SPQ	L (mm)	W (mm)	T (µm)	B (mm)
UC2842D8	D	SOIC	8	75	507	8	3940	4.32
UC2842D8.A	D	SOIC	8	75	507	8	3940	4.32
UC2842D8G4	D	SOIC	8	75	507	8	3940	4.32
UC2842N	P	PDIP	8	50	506	13.97	11230	4.32
UC2842N	P	PDIP	8	50	506	13.97	11230	4.32
UC2842N.A	P	PDIP	8	50	506	13.97	11230	4.32
UC2842N.A	P	PDIP	8	50	506	13.97	11230	4.32
UC2842NG4	P	PDIP	8	50	506	13.97	11230	4.32
UC2842NG4	P	PDIP	8	50	506	13.97	11230	4.32
UC2843D	D	SOIC	14	50	507	8	3940	4.32
UC2843D.A	D	SOIC	14	50	507	8	3940	4.32
UC2843DG4	D	SOIC	14	50	507	8	3940	4.32
UC2843N	P	PDIP	8	50	506	13.97	11230	4.32
UC2843N	P	PDIP	8	50	506	13.97	11230	4.32
UC2843N.A	P	PDIP	8	50	506	13.97	11230	4.32
UC2843N.A	P	PDIP	8	50	506	13.97	11230	4.32
UC2843NG4	P	PDIP	8	50	506	13.97	11230	4.32
UC2843NG4	P	PDIP	8	50	506	13.97	11230	4.32
UC2844N	P	PDIP	8	50	506	13.97	11230	4.32
UC2844N.A	P	PDIP	8	50	506	13.97	11230	4.32
UC2844NG4	P	PDIP	8	50	506	13.97	11230	4.32
UC2845D	D	SOIC	14	50	507	8	3940	4.32
UC2845D.A	D	SOIC	14	50	507	8	3940	4.32
UC2845DG4	D	SOIC	14	50	507	8	3940	4.32
UC2845N	P	PDIP	8	50	506	13.97	11230	4.32
UC2845N	P	PDIP	8	50	506	13.97	11230	4.32
UC2845N.A	P	PDIP	8	50	506	13.97	11230	4.32
UC2845N.A	P	PDIP	8	50	506	13.97	11230	4.32
UC2845NG4	P	PDIP	8	50	506	13.97	11230	4.32
UC2845NG4	P	PDIP	8	50	506	13.97	11230	4.32
UC3842D	D	SOIC	14	50	507	8	3940	4.32
UC3842D.A	D	SOIC	14	50	507	8	3940	4.32
UC3842D8	D	SOIC	8	75	507	8	3940	4.32
UC3842D8.A	D	SOIC	8	75	507	8	3940	4.32
UC3842N	P	PDIP	8	50	506	13.97	11230	4.32
UC3842N	P	PDIP	8	50	506	13.97	11230	4.32
UC3842N.A	P	PDIP	8	50	506	13.97	11230	4.32
UC3842N.A	P	PDIP	8	50	506	13.97	11230	4.32
UC3842NG4	P	PDIP	8	50	506	13.97	11230	4.32
UC3842NG4	P	PDIP	8	50	506	13.97	11230	4.32
UC3843D	D	SOIC	14	50	507	8	3940	4.32
UC3843D.A	D	SOIC	14	50	507	8	3940	4.32
UC3843D8	D	SOIC	8	75	507	8	3940	4.32

Device	Package Name	Package Type	Pins	SPQ	L (mm)	W (mm)	T (µm)	B (mm)
UC3843D8.A	D	SOIC	8	75	507	8	3940	4.32
UC3843D8G4	D	SOIC	8	75	507	8	3940	4.32
UC3843DG4	D	SOIC	14	50	507	8	3940	4.32
UC3843N	P	PDIP	8	50	506	13.97	11230	4.32
UC3843N	P	PDIP	8	50	506	13.97	11230	4.32
UC3843N.A	P	PDIP	8	50	506	13.97	11230	4.32
UC3843N.A	P	PDIP	8	50	506	13.97	11230	4.32
UC3843NG4	P	PDIP	8	50	506	13.97	11230	4.32
UC3843NG4	P	PDIP	8	50	506	13.97	11230	4.32
UC3844D	D	SOIC	14	50	507	8	3940	4.32
UC3844D.A	D	SOIC	14	50	507	8	3940	4.32
UC3844D8	D	SOIC	8	75	507	8	3940	4.32
UC3844D8.A	D	SOIC	8	75	507	8	3940	4.32
UC3844N	P	PDIP	8	50	506	13.97	11230	4.32
UC3844N	P	PDIP	8	50	506	13.97	11230	4.32
UC3844N.A	P	PDIP	8	50	506	13.97	11230	4.32
UC3844N.A	P	PDIP	8	50	506	13.97	11230	4.32
UC3844NG4	P	PDIP	8	50	506	13.97	11230	4.32
UC3844NG4	P	PDIP	8	50	506	13.97	11230	4.32
UC3845D	D	SOIC	14	50	507	8	3940	4.32
UC3845D.A	D	SOIC	14	50	507	8	3940	4.32
UC3845DG4	D	SOIC	14	50	507	8	3940	4.32
UC3845N	P	PDIP	8	50	506	13.97	11230	4.32
UC3845N	P	PDIP	8	50	506	13.97	11230	4.32
UC3845N.A	P	PDIP	8	50	506	13.97	11230	4.32
UC3845N.A	P	PDIP	8	50	506	13.97	11230	4.32
UC3845NG4	P	PDIP	8	50	506	13.97	11230	4.32
UC3845NG4	P	PDIP	8	50	506	13.97	11230	4.32

JG0008A

CDIP - 5.08 mm max height

CERAMIC DUAL IN-LINE PACKAGE

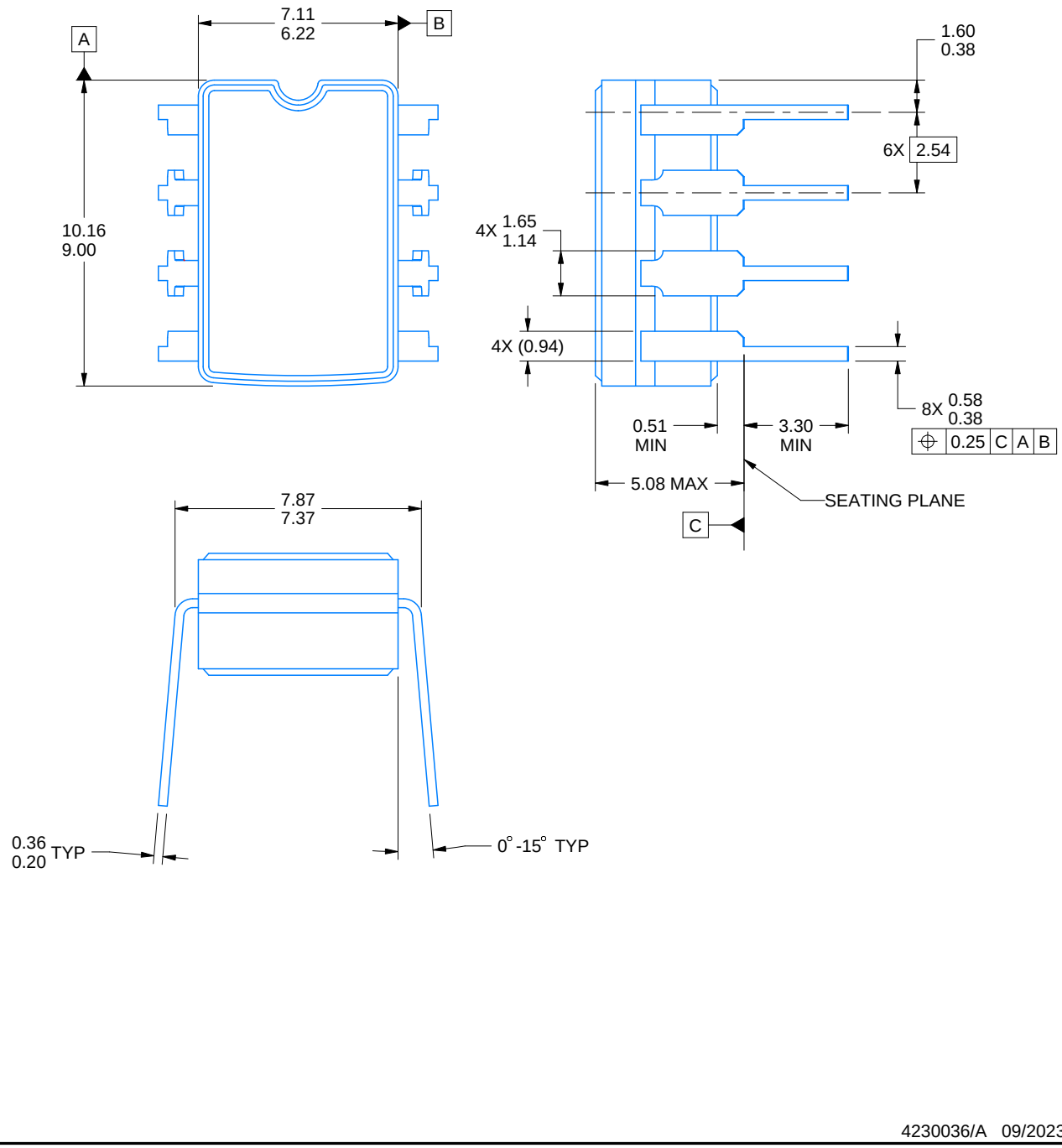

4230036/A 09/2023

NOTES:

1. All linear dimensions are in millimeters. Any dimensions in parenthesis are for reference only. Dimensioning and tolerancing per ASME Y14.5M.
2. This drawing is subject to change without notice.
3. This package can be hermetically sealed with a ceramic lid using glass frit.
4. Index point is provided on cap for terminal identification.
5. Falls within MIL STD 1835 GDIP1-T8

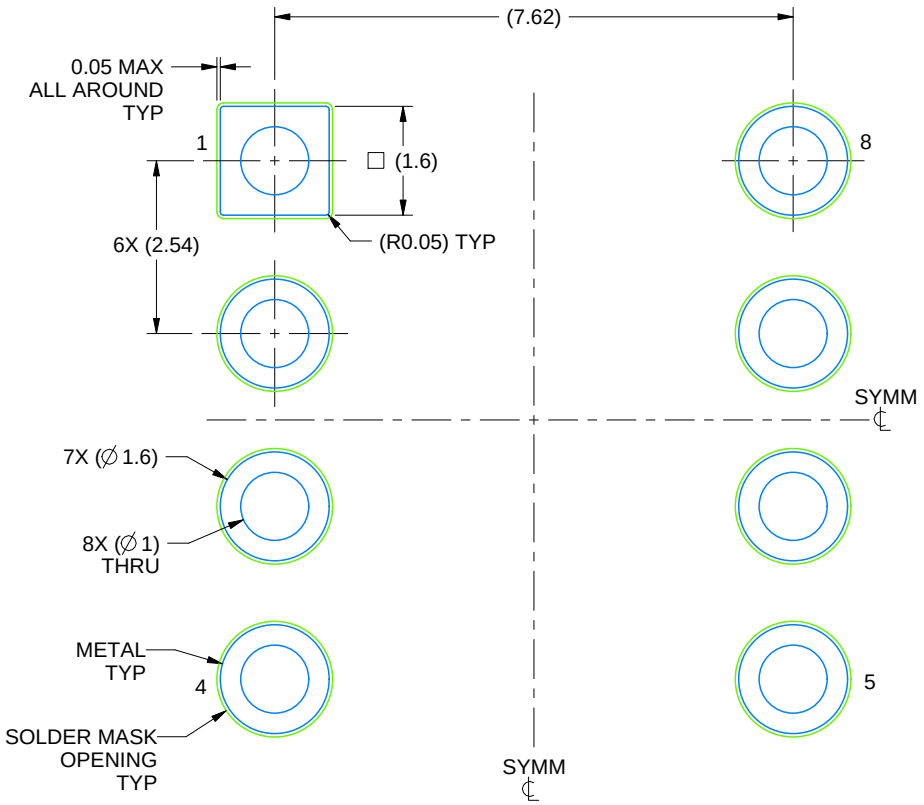

LAND PATTERN EXAMPLE
NON SOLDER MASK DEFINED
SCALE: 9X

4230036/A 09/2023

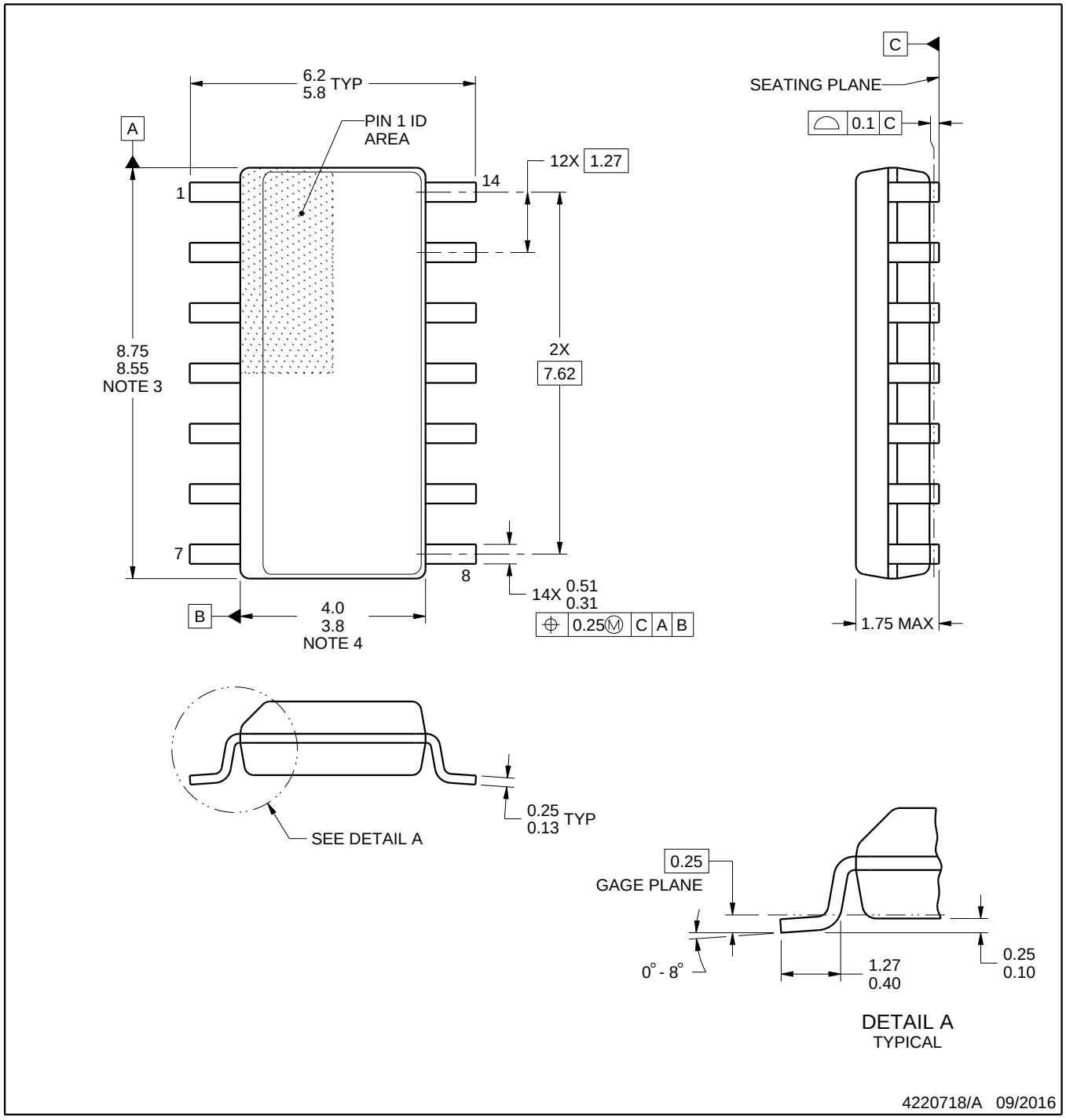

NOTES:

1. All linear dimensions are in millimeters. Dimensions in parenthesis are for reference only. Dimensioning and tolerancing per ASME Y14.5M.
2. This drawing is subject to change without notice.
3. This dimension does not include mold flash, protrusions, or gate burrs. Mold flash, protrusions, or gate burrs shall not exceed 0.15 mm, per side.
4. This dimension does not include interlead flash. Interlead flash shall not exceed 0.43 mm, per side.
5. Reference JEDEC registration MS-012, variation AB.

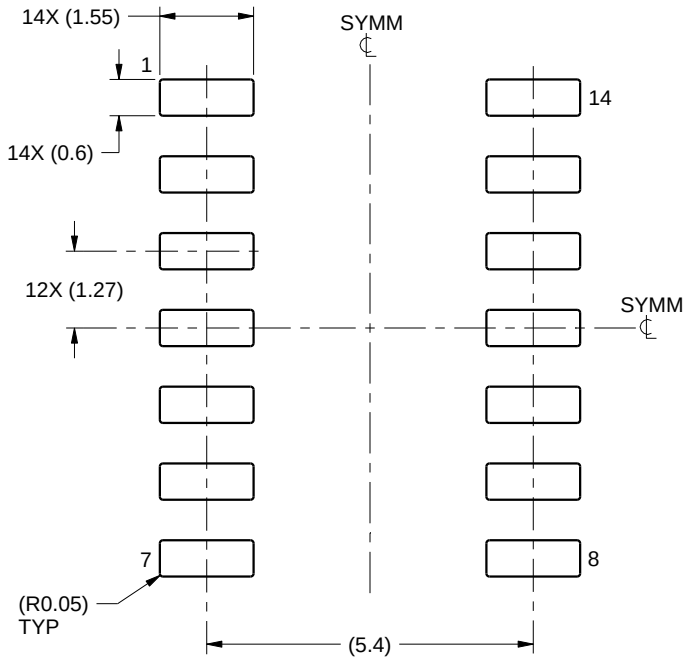

LAND PATTERN EXAMPLE
SCALE:8X

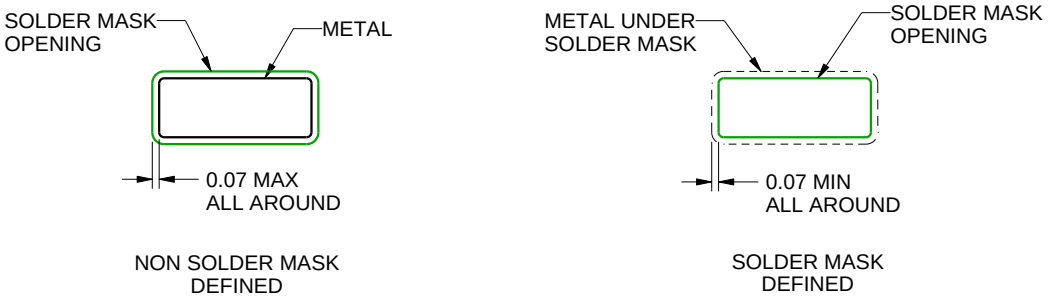

SOLDER MASK DETAILS

4220718/A 09/2016

NOTES: (continued)

6. Publication IPC-7351 may have alternate designs.
7. Solder mask tolerances between and around signal pads can vary based on board fabrication site.

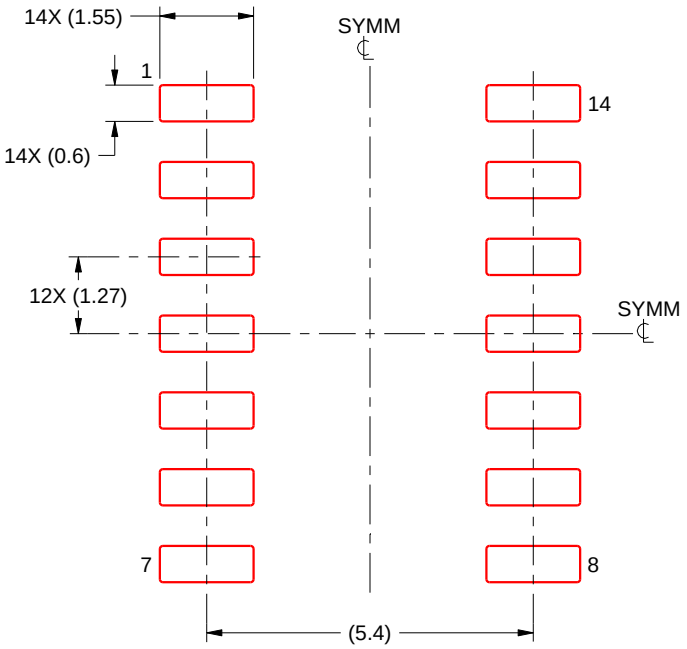

SOLDER PASTE EXAMPLE
BASED ON 0.125 mm THICK STENCIL
SCALE:8X

4220718/A 09/2016

NOTES: (continued)

8. Laser cutting apertures with trapezoidal walls and rounded corners may offer better paste release. IPC-7525 may have alternate design recommendations.
9. Board assembly site may have different recommendations for stencil design.

W (R–GDFP–F14) CERAMIC DUAL FLATPACK

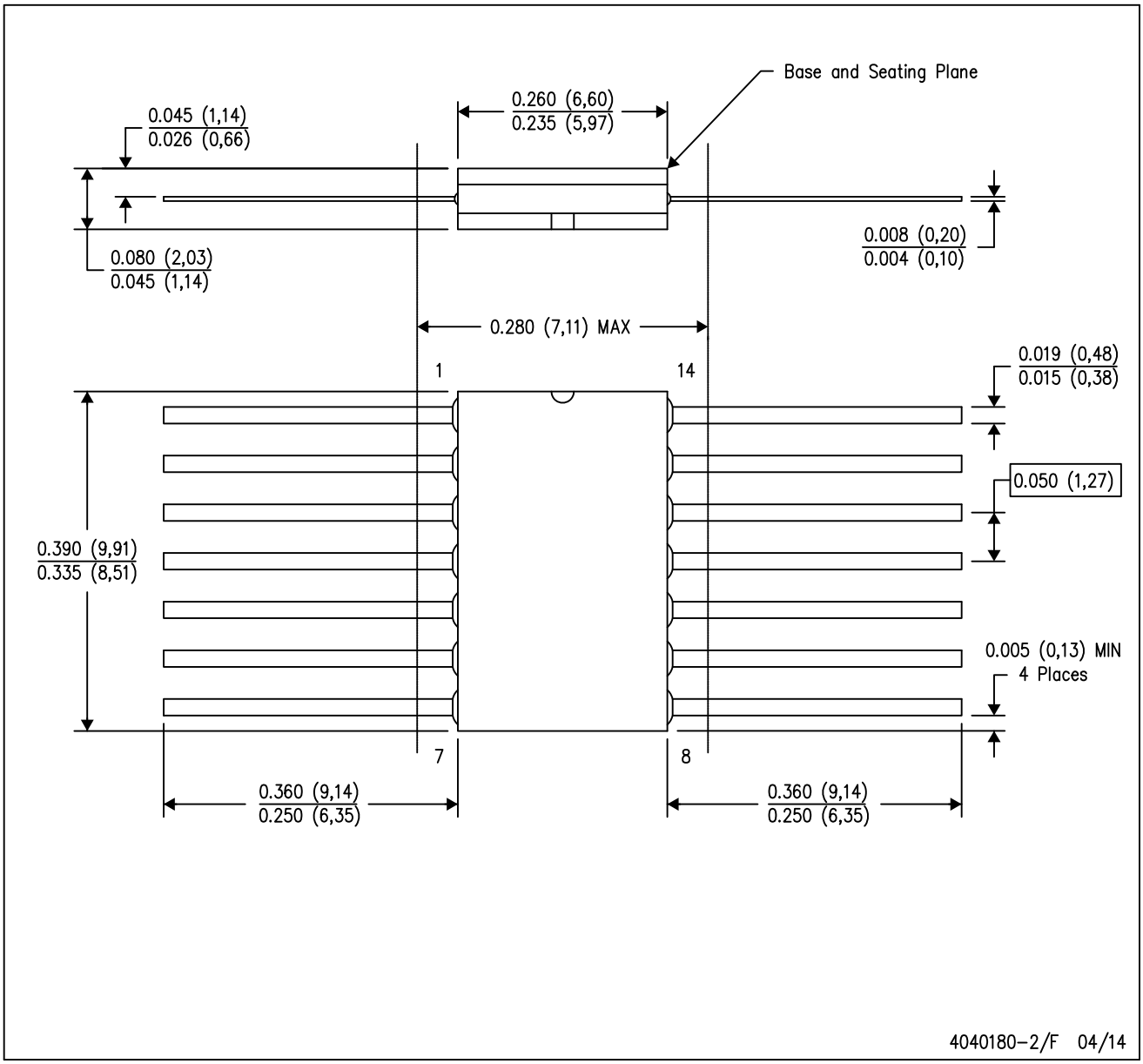

NOTES:
A. All linear dimensions are in inches (millimeters).
B. This drawing is subject to change without notice.
C. This package can be hermetically sealed with a ceramic lid using glass frit.
D. Index point is provided on cap for terminal identification only.
E. Falls within MIL STD 1835 GDFP1–F14

GENERIC PACKAGE VIEW

FK 20

LCCC - 2.03 mm max height

8.89 x 8.89, 1.27 mm pitch

LEADLESS CERAMIC CHIP CARRIER

This image is a representation of the package family, actual package may vary.
Refer to the product data sheet for package details.

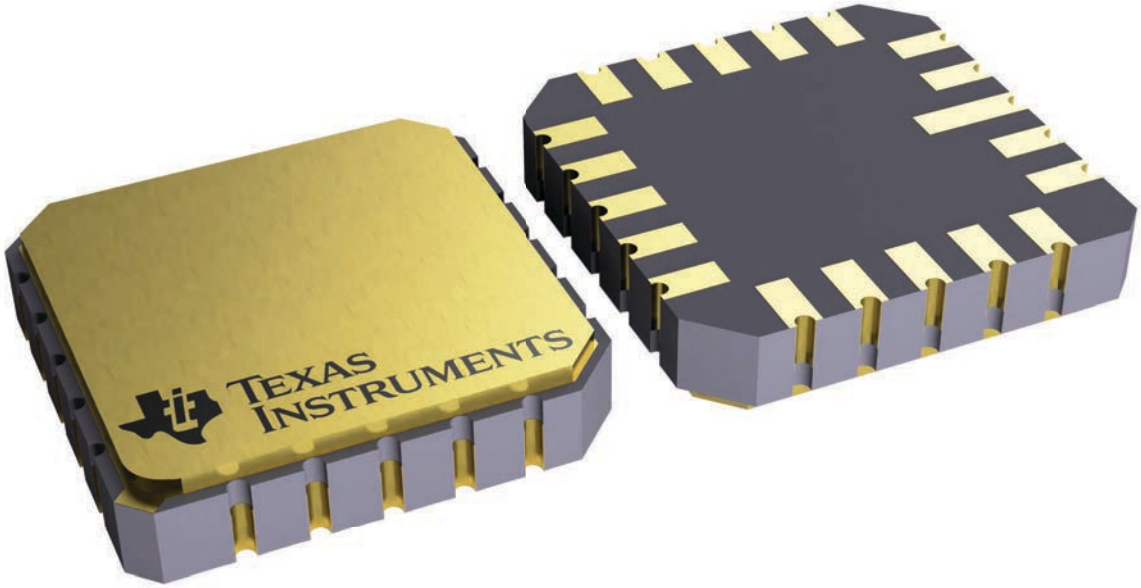

4229370VA\

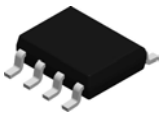

PACKAGE OUTLINE

D0008A

SOIC - 1.75 mm max height

SMALL OUTLINE INTEGRATED CIRCUIT

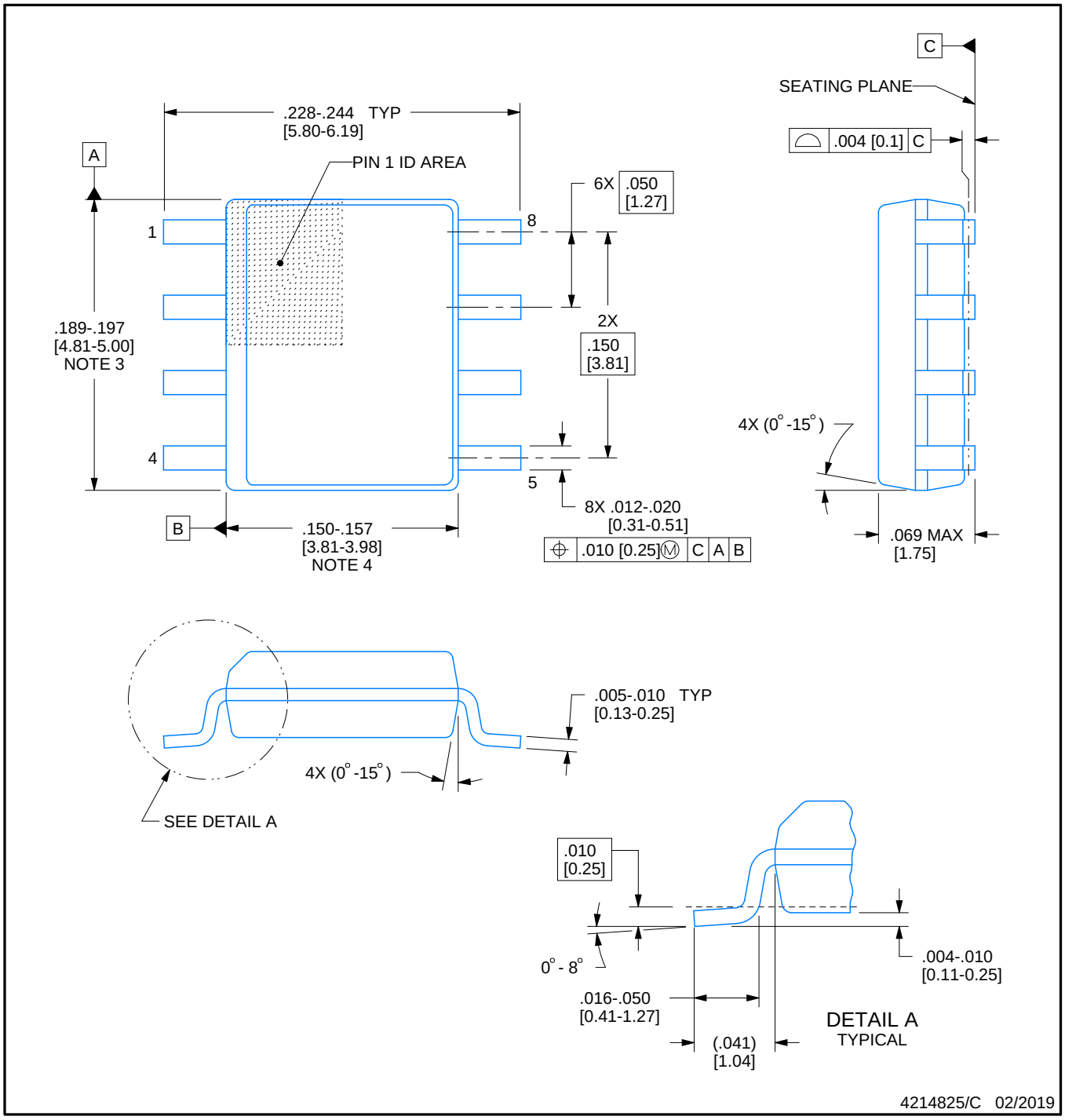

NOTES:

1. Linear dimensions are in inches [millimeters]. Dimensions in parenthesis are for reference only. Controlling dimensions are in inches. Dimensioning and tolerancing per ASME Y14.5M.
2. This drawing is subject to change without notice.
3. This dimension does not include mold flash, protrusions, or gate burrs. Mold flash, protrusions, or gate burrs shall not exceed .006 [0.15] per side.
4. This dimension does not include interlead flash.
5. Reference JEDEC registration MS-012, variation AA.

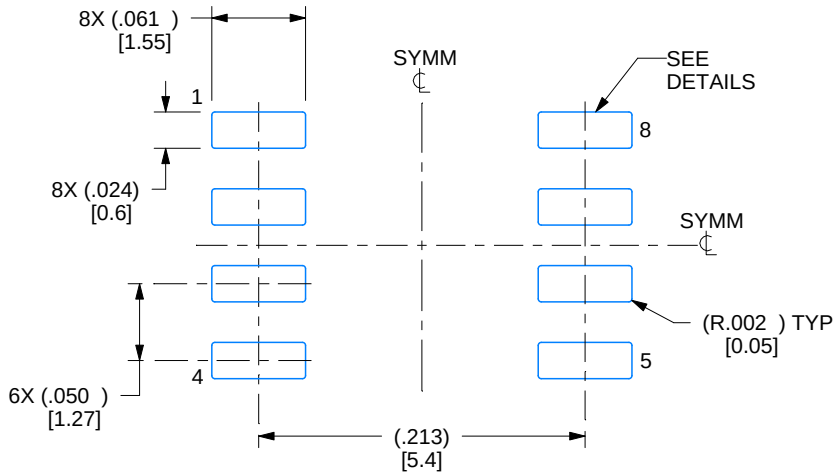

LAND PATTERN EXAMPLE
EXPOSED METAL SHOWN
SCALE:8X

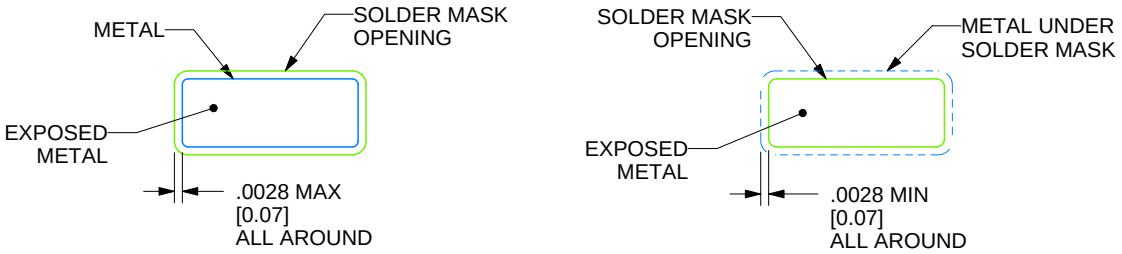

SOLDER MASK DETAILS

4214825/C 02/2019

NOTES: (continued)

6. Publication IPC-7351 may have alternate designs.
7. Solder mask tolerances between and around signal pads can vary based on board fabrication site.

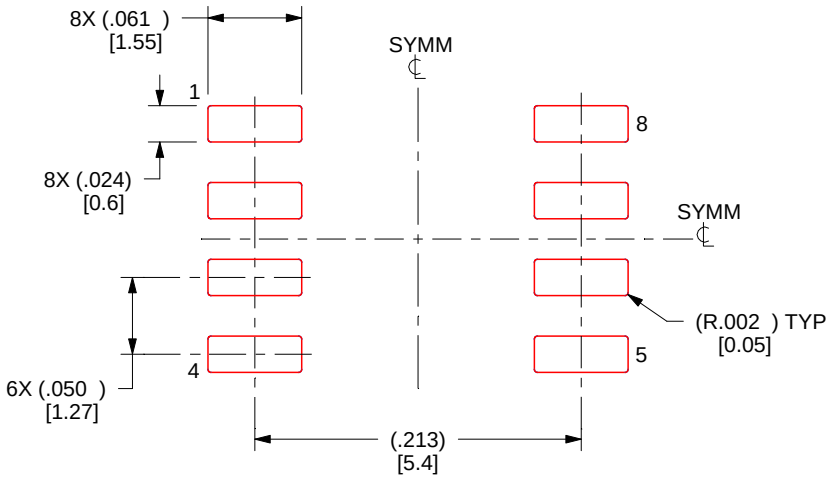

SOLDER PASTE EXAMPLE
BASED ON .005 INCH [0.125 MM] THICK STENCIL
SCALE:8X

4214825/C 02/2019

NOTES: (continued)

8. Laser cutting apertures with trapezoidal walls and rounded corners may offer better paste release. IPC-7525 may have alternate design recommendations.
9. Board assembly site may have different recommendations for stencil design.

P (R–PDIP–T8) PLASTIC DUAL–IN–LINE PACKAGE

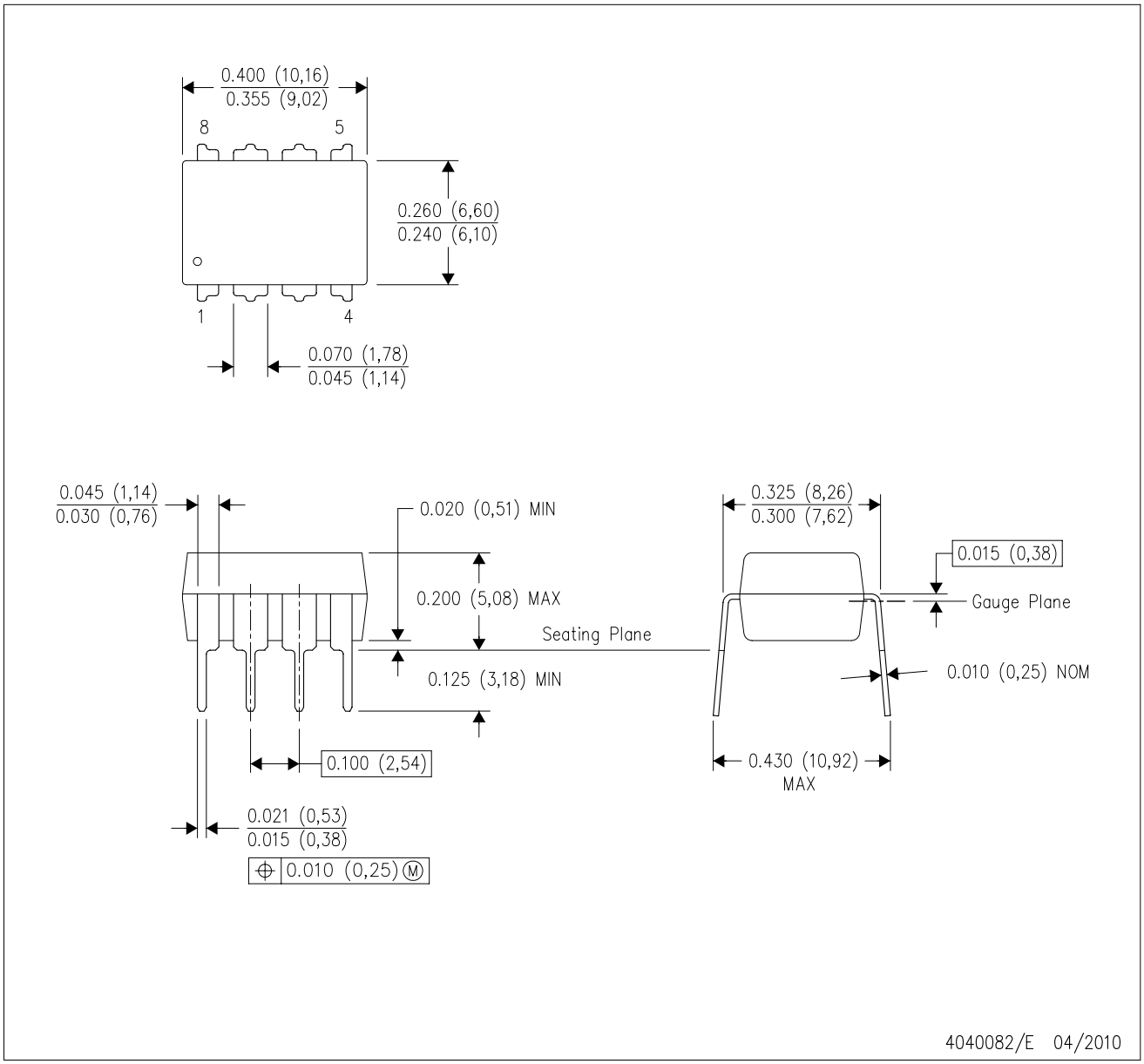

NOTES:
A. All linear dimensions are in inches (millimeters).
B. This drawing is subject to change without notice.
C. Falls within JEDEC MS–001 variation BA.

IMPORTANT NOTICE AND DISCLAIMER

TI PROVIDES TECHNICAL AND RELIABILITY DATA (INCLUDING DATASHEETS), DESIGN RESOURCES (INCLUDING REFERENCE DESIGNS), APPLICATION OR OTHER DESIGN ADVICE, WEB TOOLS, SAFETY INFORMATION, AND OTHER RESOURCES “AS IS” AND WITH ALL FAULTS, AND DISCLAIMS ALL WARRANTIES, EXPRESS AND IMPLIED, INCLUDING WITHOUT LIMITATION ANY IMPLIED WARRANTIES OF MERCHANTABILITY, FITNESS FOR A PARTICULAR PURPOSE OR NON-INFRINGEMENT OF THIRD PARTY INTELLECTUAL PROPERTY RIGHTS.

These resources are intended for skilled developers designing with TI products. You are solely responsible for (1) selecting the appropriate TI products for your application, (2) designing, validating and testing your application, and (3) ensuring your application meets applicable standards, and any other safety, security, regulatory or other requirements.

These resources are subject to change without notice. TI grants you permission to use these resources only for development of an application that uses the TI products described in the resource. Other reproduction and display of these resources is prohibited. No license is granted to any other TI intellectual property right or to any third party intellectual property right. TI disclaims responsibility for, and you fully indemnify TI and its representatives against any claims, damages, costs, losses, and liabilities arising out of your use of these resources.

TI’s products are provided subject to TI’s Terms of Sale, TI’s General Quality Guidelines, or other applicable terms available either on ti.com or provided in conjunction with such TI products. TI’s provision of these resources does not expand or otherwise alter TI’s applicable warranties or warranty disclaimers for TI products. Unless TI explicitly designates a product as custom or customer-specified, TI products are standard, catalog, general purpose devices.

TI objects to and rejects any additional or different terms you may propose.

Copyright © 2026, Texas Instruments Incorporated

Last updated 10/2025