TXG1010 1-bit, ±10V Ground-level Translator

1 Features

- Supports DC shifts up to ±10V
- AC Noise Rejection of $20V_{PP}$ up to 45MHz
- CMTI of 1kV/µs
- Low Prop Delay (<5ns)
- Greater than 175Mbps
- Low power consumption (0.6mA per channel at 1Mbps, 1.8V)
- Fully configurable dual-rail design allows each port to operate from 1.71V to 5.5V
- 4, 2, 1 channel devices with multiple configurations will be available
- Supports V_{CC} disconnect feature (I/Os are forced into high-Z)
- Schmitt-trigger inputs allows for slow and noisy signals
- Inputs with integrated static pull-down resistors prevent channels from floating
- Operating temperature from –40°C to +125°C
- Latch-up performance exceeds 100mA per JESD 78, class II
  - ESD protection exceeds JESD 22
  - 4000V human-body model
  - 500V charged-device model
- Package options provided:
  - DSE (WSON-6)

2 Applications

- Test and Measurement
- Industrial Automation
- Appliances
- Robotics
- Avionics

3 Description

The TXG1010 is a 1-bit, fixed direction, non-galvanic based voltage and ground-level translator that can support both logic-level shifting between 1.71V to 5.5V and ground-level shifting up to ±10V. Compared to traditional level shifters, the TXG1010 family can solve the challenges of voltage translation across different ground levels. The Simplified Diagram shows a common use case where DC shift occurs between GNDA to GNDB due to parasitic resistance or capacitance.

V_{CCA} is referenced to GNDA and V_{CCB} is referenced to GNDB. Ax pins are referenced to V_{CCA} logic level while Bx pins are referenced to V_{CCB} logic levels. Both A port and B port can accept voltages from 1.71V to 5.5V. The leakage between GNDA and GNDB is <10nA when V_{CC} to GND is shorted.

The TXG1010 device helps improve noise immunity and power sequencing across different ground domains while providing low power consumption, latency and channel-to-channel skew. It can supress noise levels of $20V_{PP}$ up to 45MHz (Figure 7-4). This device can support multiple interfaces such as UART, GPIO, and JTAG.

Package Information

PART NUMBER	PACKAGE(1)	BODY SIZE (NOM)
TXG1010	DSE (WSON-6)	1.5mm × 1.5mm

(1) For all available packages, see Section 11.

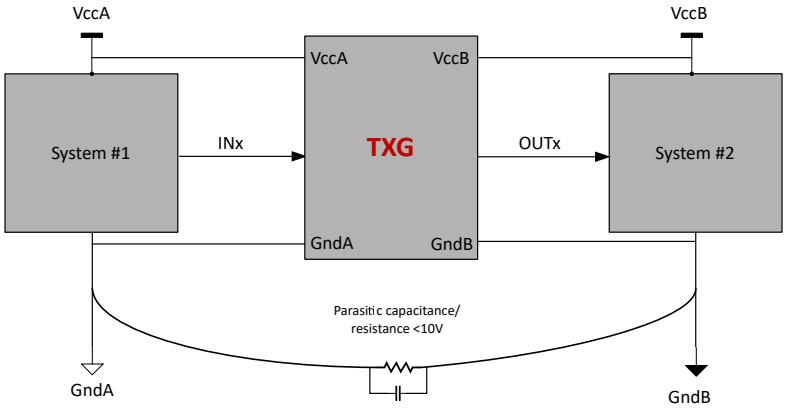

Simplified Diagram

An IMPORTANT NOTICE at the end of this data sheet addresses availability, warranty, changes, use in safety-critical applications, intellectual property matters and other important disclaimers. PRODUCTION DATA.

Table of Contents

1 Features....1
2 Applications....1
3 Description....1
4 Pin Configuration and Functions....3
5 Specifications....4
5.1 Absolute Maximum Ratings....4
5.2 ESD Ratings....4
5.3 Recommended Operating Conditions....5
5.4 Thermal Information....5
5.5 Electrical Characteristics....6
5.6 Supply Current....8
5.7 Switching Characteristics, V_{CCA} = 1.8 ± 0.15V....9
5.8 Switching Characteristics, V_{CCA} = 2.5 ± 0.2V....10
5.9 Switching Characteristics, V_{CCA} = 3.3 ± 0.3V....11
5.10 Switching Characteristics, V_{CCA} = 5.0 ± 0.5V....11
5.11 Switching Characteristics: T_{sk}, T_{MAX}....12
5.12 Typical Characteristics....13
6 Parameter Measurement Information....14
6.1 Load Circuit and Voltage Waveforms....14
7 Detailed Description....16
7.1 Overview....16
7.2 Functional Block Diagram....16
7.3 Feature Description....17
7.4 Device Functional Modes....19
8 Application and Implementation....20
8.1 Application Information....20
8.2 Typical Application....20
8.3 Power Supply Recommendations....22
8.4 Layout....22
9 Device and Documentation Support....23
9.1 Device Support....23
9.2 Documentation Support....23
9.3 Receiving Notification of Documentation Updates....23
9.4 Support Resources....23
9.5 Trademarks....23
9.6 Electrostatic Discharge Caution....23
9.7 Glossary....23
10 Revision History....23
11 Mechanical, Packaging, and Orderable Information....23

Copyright © 2026 Texas Instruments Incorporated

4 Pin Configuration and Functions

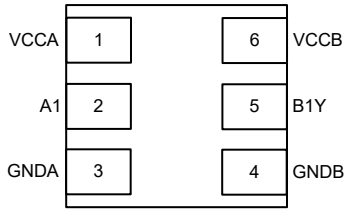

Figure 4-1. TXGx010DSE Package 6-Pin WSON Top View

Table 4-1. TXGx010 DSE Pin Functions

PIN		I/O	DESCRIPTION
Name	TXGx010		
A1	2	I	Input A1. Referenced to V_{CCA}
B1Y	5	O	Output B1. Referenced to V_{CCB}
V_{CCA}	1	—	A side supply voltage. 1.71V ≤ V_{CCA} ≤ 5.5V
V_{CCB}	6	—	B side supply voltage. 1.71V ≤ V_{CCB} ≤ 5.5V
GNDA	3	—	Ground reference for V_{CCA}
GNDB	4	—	Ground reference for V_{CCB}

Copyright © 2026 Texas Instruments Incorporated

5 Specifications

5.1 Absolute Maximum Ratings

over operating free-air temperature range (unless otherwise noted)[1]

			MIN	MAX	UNIT
V_{CCA} to V_{GNDA}	Supply voltage A to Ground voltage A		–0.5	6.5	V
V_{CCB} to V_{GNDB}	Supply voltage B to Ground voltage B		–0.5	6.5	V
V_{GNDA} to V_{GNDB}	Ground voltage B to Ground voltage A		–15	15	V
V_I	Input Voltage[2]	I/O Ports (A Port) to V_{GNDA}	–0.5	6.5	V
		I/O Ports (B Port) to V_{GNDB}	–0.5	6.5	
V_O	Voltage applied to any output in the high-impedance or power-off state[2]	A Port to V_{GNDA}	–0.5	6.5	V
		B Port to V_{GNDB}	–0.5	6.5	
V_O	Voltage applied to any output in the high or low state[2] [3]	A Port to V_{GNDA}	–0.5	V_{CCA} + 0.5	V
		B Port to V_{GNDB}	–0.5	V_{CCB} + 0.5	
I_{IK}	Input clamp current	V_I < 0	–20		mA
I_{OK}	Output clamp current	V_O < 0	–20		mA
I_O	Continuous output current		–25	25	mA
	Continuous current through V_{CC} or GND		–100	100	mA
T_j	Junction Temperature			150	°C
T_{stg}	Storage temperature		–65	150	°C

(1) Operation outside the Absolute Maximum Ratings may cause permanent device damage. Absolute Maximum Ratings do not imply functional operation of the device at these or any other conditions beyond those listed under Recommended Operating Conditions. If used outside the Recommended Operating Conditions but within the Absolute Maximum Ratings, the device may not be fully functional, and this may affect device reliability, functionality, performance, and shorten the device lifetime.
(2) The input voltage and output negative-voltage ratings may be exceeded if the input and output current ratings are observed.
(3) The output positive-voltage rating can be exceeded up to 6.5V maximum if the output current rating is observed.

5.2 ESD Ratings

			VALUE	UNIT
$V_{(ESD)}$	Electrostatic discharge	Human body model (HBM), per ANSI/ESDA/JEDEC JS-001[1]	±2500	V
		Charged device model (CDM), per ANSI/ESDA/JEDEC JS-002[2]	±500	

(1) JEDEC document JEP155 states that 500V HBM allows safe manufacturing with a standard ESD control process.
(2) JEDEC document JEP157 states that 250V CDM allows safe manufacturing with a standard ESD control process.

Copyright © 2026 Texas Instruments Incorporated

5.3 Recommended Operating Conditions

over operating free-air temperature range (unless otherwise noted) (1) (2) (3)

			MIN	TYP	MAX	UNIT
V_{CCA}	Supply voltage A - Relative to GNDA		1.71		5.5	V
V_{CCB}	Supply voltage B - Relative to GNDB		1.71		5.5	V
V_{GNDA} - V_{GNDB}	Voltage Between GNDA and GNDB		–10		10	V
I_{OH}	High-level output current	V_{CCO} = 1.71V	–4.5			mA
		V_{CCO} = 2.3V	–8			
		V_{CCO} = 3V	–10			
		V_{CCO} = 4.5V	–12			
I_{OL}	Low-level output current	V_{CCO} = 1.71V			4.5	mA
		V_{CCO} = 2.3V			8	
		V_{CCO} = 3V			10	
		V_{CCO} = 4.5V			12	
V_I	Input voltage - Relative to GNDA		0		5.5	V
V_{IH}	High-level input voltage		0.7 × V_{CCI}			V
V_{IL}	High-level output voltage				0.3 × V_{CCI}	V
V_O	Output voltage - Relative to GNDB		0		V_{CCO}	V
T_A	Operating free-air temperature		–40		125	°C

(1) V_{CCI} is the V_{CC} associated with the input port.
(2) V_{CCO} is the V_{CC} associated with the output port.
(3) All control inputs and data I/Os of this device have weak pulldowns to ensure the line is not floating when undefined external to the device. The input leakage from these weak pulldowns is defined by the I_I specification indicated under Electrical Characteristics.

5.4 Thermal Information

THERMAL METRIC(1)		TXGx010 DSE (WSON) 6 PINS	UNIT
$R_{\theta JA}$	Junction-to-ambient thermal resistance	148.2	°C/W
$R_{\theta JC(top)}$	Junction-to-case (top) thermal resistance	13.7	°C/W
$R_{\theta JB}$	Junction-to-board thermal resistance	39.8	°C/W
Y_{JT}	Junction-to-top characterization parameter	16.5	°C/W
Y_{JB}	Junction-to-board characterization parameter	50.3	°C/W
$R_{\theta JC(bottom)}$	Junction-to-case (bottom) thermal resistance	N/A	°C/W

(1) For more information about traditional and new thermal metrics, see the *Semiconductor and IC Package Thermal Metrics* application note.

5.5 Electrical Characteristics

over operating free-air temperature range (unless otherwise noted)[1] [2]

PARAMETER		TEST CONDITIONS	V_{CCA}	V_{CCB}	Operating free-air temperature (T_A) –40°C to 125°C MIN	TYP	MAX	UNIT
V_{OH}	High-level output voltage [3]	I_{OH} = –4.5 mA	1.71 V	1.71 V	1.5			V
		I_{OH} = –8 mA	2.3 V	2.3 V	2			
		I_{OH} = –10 mA	3 V	3 V	2.7			
		I_{OH} = –12 mA	4.5 V	4.5 V	4.1			
V_{OL}	Low-level output voltage [4]	I_{OL} = 4.5 mA	1.71 V	1.71 V			0.16	V
		I_{OL} = 8 mA	2.3 V	2.3 V			0.27	
		I_{OL} = 10 mA	3 V	3 V			0.34	
		I_{OL} = 12 mA	4.5 V	4.5 V			0.41	
V_{T+}	Positive-going input-threshold voltage	Data Inputs (Ax, Bx) (Referenced to V_{CCI})	1.71 V	1.71 V			1.11	V
			2.3 V	2.3 V			1.4	
			3 V	3 V			1.73	
			4.5 V	4.5 V			2.45	
			5.5 V	5.5 V			2.96	
V_{T-}	Negative-going input-threshold voltage	Data Inputs (Ax, Bx) (Referenced to V_{CCI})	1.71 V	1.71 V	0.57			V
			2.3 V	2.3 V	0.8			
			3 V	3 V	1.15			
			4.5 V	4.5 V	1.61			
			5.5 V	5.5 V	2			
ΔV_T	Input-threshold hysteresis ($V_{T+} – V_{T-}$)	Data Inputs (Ax, Bx) (Referenced to V_{CCI})	1.71 V	1.71 V	0.31		0.54	V
			2.3 V	2.3 V	0.36		0.6	
			3 V	3 V	0.38		0.54	
			4.5 V	4.5 V	0.41		0.66	
ΔV_T	Input-threshold hysteresis ($V_{T+} – V_{T-}$)	Data Inputs (Ax, Bx) (Referenced to V_{CCI})	5.5 V	5.5 V	0.4		0.96	V
I_I	Input leakage current	Data Inputs (Ax, Bx) V_I = V_{CCI} or GND	1.71V – 5.5V	1.71V – 5.5V			1.6	µA
$I_{off\text{-}float}$	Floating supply Partial power down current	A Port or B Port V_I = GND	Floating[5]	0 V - 5.5 V	–1.6		1.6	µA
			0 V - 5.5 V	Floating[5]	–1.6		1.6	

Copyright © 2026 Texas Instruments Incorporated

over operating free-air temperature range (unless otherwise noted)[(1) (2)]

PARAMETER		TEST CONDITIONS	V_{CCA}	V_{CCB}	Operating free-air temperature (T_A) –40°C to 125°C			UNIT
					MIN	TYP	MAX	
C_i	Control Input Capacitance	V_I = 3.3 V or V_{GNDA}	3.3 V	3.3 V			2	pF
C_{io}	Data I/O Capacitance	V_O = 1.71V DC +1 MHz -16 dBm sine wave	3.3 V	3.3 V			2	pF
C_{GND}	Cap between grounds	All channels combined (V_{CC} both sides are powered on)					23	pF
	Cap between grounds	All channels combined (V_{CC} to GND shorted)					27	pF
Leakage	Current Leakage between GndA to GndB	All channels combined (V_{CC} to GND shorted)	1.71V – 5.5V	1.71V – 5.5V		0.1	10	nA
Leakage	Current Leakage between GndA to GndB	All channels combined (V_{CC} both sides are powered on and inputs are all low)	1.71V – 5.5V	1.71V – 5.5V		1	27	nA
Leakage	Current Leakage between GndA to GndB	All channels combined (V_{CC} both sides are powered on and inputs are all high)	1.71V – 5.5V	1.71V – 5.5V		0.3	12	µA
CMTI	Common Mode Transient Immunity	Input toggling at 100Mbps Ground shift up to 10V	1.71V – 5.5V	1.71V – 5.5V	1			kV/µs
V_{UVLO+}	Positive-Going Undervoltage Lockout Voltage	A Supply	1.71V – 5.5V				1.55	V
V_{UVLO+}	Positive-Going Undervoltage Lockout Voltage	B Supply		1.71V – 5.5V			1.55	V
V_{UVLO-}	Negative-Going Undervoltage Lockout Voltage	A Supply	1.71V – 5.5V		1.36			V
V_{UVLO-}	Negative-Going Undervoltage Lockout Voltage	B Supply		1.71V – 5.5V	1.36			V
V_{UVLO_Hys}	Undervoltage Lockout Hysteresis	A Supply	1.71V – 5.5V		36		147	V
V_{UVLO_Hys}	Undervoltage Lockout Hysteresis	B Supply		1.71V – 5.5V	36		147	V

(1) V_{CCI} is the V_{CC} associated with the input port and referenced to GND_A
(2) V_{CCO} is the V_{CC} associated with the output port and referenced to GND_B
(3) Tested at $V_I = V_{T+(MAX)}$
(4) Tested at $V_I = V_{T-(MIN)}$

Copyright © 2026 Texas Instruments Incorporated

(5) Floating is defined as a node that is both not actively driven by an external device and has leakage not exeeding 10nA

5.6 Supply Current

over operating free-air temperature range (unless otherwise noted)[1] [2]

PARAMETER		TEST CONDITIONS	V_{CCA}	V_{CCB}	Operating free-air temperature (T_A) –40°C to 125°C MIN	TYP	MAX	UNIT
I_{CCA}	V_{CCA} supply current	$V_I = V_{CCI}$ or GND, $I_O = 0$	1.71V – 5.5V	1.71V – 5.5V			130.8	µA
			0V	5.5V			0.6	
			5.5V	0V			130.8	
		V_I = GND, $I_O = 0$	5.5V	Floating[3]			130.8	
I_{CCB}	V_{CCB} supply current	$V_I = V_{CCI}$ or GND, $I_O = 0$	1.71V – 5.5V	1.71V – 5.5V			600.3	µA
			0V	5.5V			446	
			5.5V	0V			12.2	
		V_I = GND, $I_O = 0$	Floating[3]	5.5V			446	
$I_{CCA} + I_{CCB}$	Supply Current - DC Signal	$V_I = V_{CCI}$	1.8V	1.8V			0.6	mA
			2.5V	2.5V			0.7	
			3.3V	3.3V			0.7	
			5V	5V			0.8	
		V_I = GND	1.8V	1.8V			0.6	mA
			2.5V	2.5V			0.7	
			3.3V	3.3V			0.7	
			5V	5V			0.8	

Copyright © 2026 Texas Instruments Incorporated

over operating free-air temperature range (unless otherwise noted)[(1) (2)]

PARAMETER		TEST CONDITIONS	V_{CCA}	V_{CCB}	Operating free-air temperature (T_A) –40°C to 125°C MIN	TYP	MAX	UNIT
I_{CCA} + I_{CCB}	Supply Current - AC Signal	All channels switching with square wave clock input; CL = 15pF, 1Mbps	1.8V	1.8V			0.6	mA
			2.5V	2.5V			0.7	
			3.3V	3.3V			0.7	
			5V	5V			0.8	
		All channels switching with square wave clock input; CL = 15pF, 50Mbps	1.8V	1.8V			3.2	mA
			2.5V	2.5V			3.8	
			3.3V	3.3V			4	
			5V	5V			5.5	
		All channels switching with square wave clock input; CL = 15pF, 100Mbps	1.8V	1.8V			5.5	mA
			2.5V	2.5V			6.4	
			3.3V	3.3V			7.6	
			5V	5V			10.3	

(1) V_{CCI} is the V_{CC} associated with the input port
(2) V_{CCO} is the V_{CC} associated with the output port
(3) Floating is defined as a node that is both not actively driven by an external device and has leakage not exeeding 10nA

5.7 Switching Characteristics, V_{CCA} = 1.8 ± 0.15V

PARAMETER		TEST CONDITIONS	FROM	TO	Test Conditions	B-Port Supply Voltage (V_{CCB}) 1.8 ± 0.15V MIN	TYP	MAX	2.5 ± 0.2V MIN	TYP	MAX	3.3 ± 0.3V MIN	TYP	MAX	5.0 ± 0.5V MIN	TYP	MAX	UNIT
t_{pd}	Propagation delay	1Mbps all 4 channels toggling	A	B	-40°C to 85°C	2.8		7.3	2.8		7.4	2.9		7.6	2.9		7.8	ns
			A	B	-40°C to 125°C	2.8		7.6	2.8		7.8	2.9		7.9	2.9		8.3	
PWD	Pulse width distortion	$\lvert t_{phl} - t_{plh} \rvert$	A	B	-40°C to 85°C	0.7		1.5	0.7		1.4	0.5		1.4	0.4		1.2	ns
			A	B	-40°C to 125°C	0.7		1.5	0.7		1.4	0.5		1.4	0.4		1.2	
t_r	output signal rise time		A	B	-40°C to 85°C	0.5		1.2	0.4		1.3	0.5		1.4	0.6		1.6	ns
			A	B	-40°C to 125°C	0.5		1.3	0.4		1.3	0.5		1.4	0.6		1.7	
tf	output signal fall time		A	B	-40°C to 85°C	0.4		1.3	0.4		1.4	0.4		1.5	0.4		1.8	ns
			A	B	-40°C to 125°C	0.4		1.4	0.4		1.5	0.4		1.7	0.4		2.1	

Copyright © 2026 Texas Instruments Incorporated

PARAMETER		TEST CONDITIONS	FROM	TO	Test Conditions	B-Port Supply Voltage (V_{CCB})												UNIT
						1.8 ± 0.15V			2.5 ± 0.2V			3.3 ± 0.3V			5.0 ± 0.5V			
						MIN	TYP	MAX	MIN	TYP	MAX	MIN	TYP	MAX	MIN	TYP	MAX	
t_{DO}	Default output delay time from input power loss	Measured from the time VCC goes below 1.36V			-40°C to 85°C			7.9			7.8			7.7			7.5	µs
					-40°C to 125°C			7.9			7.8			7.7			7.5	
t_{PU}	Time from ULVO to valid output data				-40°C to 85°C			54.5			54.5			54.5			54.5	µs
					-40°C to 125°C			54.5			54.5			54.5			54.5	

5.8 Switching Characteristics, V_{CCA} = 2.5 ± 0.2V

PARAMETER		TEST CONDITIONS	FROM	TO	Test Conditions	B-Port Supply Voltage (V_{CCB})												UNIT
						1.8 ± 0.15V			2.5 ± 0.2V			3.3 ± 0.3V			5.0 ± 0.5V			
						MIN	TYP	MAX	MIN	TYP	MAX	MIN	TYP	MAX	MIN	TYP	MAX	
t_{pd}	Propagation delay	1Mbps all 4 channels toggling	A	B	-40°C to 85°C	2.7		5.7	2.7		5.8	2.7		5.9	2.8		6.3	ns
			A	B	-40°C to 125°C	2.7		6	2.7		6.1	2.7		6.2	2.8		6.6	
PWD	Pulse width distortion	$\lvert t_{phl} - t_{plh} \rvert$	A	B	-40°C to 85°C	0.1		0.9	0.1		0.8	0		0.7	-0.2		0.6	ns
			A	B	-40°C to 125°C	0.1		0.9	0		0.8	0		0.7	-0.2		0.6	
t_r	output signal rise time		A	B	-40°C to 85°C	0.5		1.3	0.4		1.35	0.5		1.4	0.6		1.7	ns
			A	B	-40°C to 125°C	0.5		1.3	0.4		1.35	0.5		1.4	0.6		1.7	
tf	output signal fall time		A	B	-40°C to 85°C	0.4		1.3	0.4		1.4	0.4		1.5	0.4		1.8	ns
			A	B	-40°C to 125°C	0.4		1.3	0.4		1.5	0.4		1.6	0.4		2	
t_{DO}	Default output delay time from input power loss	Measured from the time VCC goes below 1.36V			-40°C to 85°C			7.9			7.8			7.7			7.5	µs
	Default output delay time from input power loss				-40°C to 125°C			7.9			7.8			7.7			7.5	
t_{PU}	Time from ULVO to valid output data				-40°C to 85°C			61.3			61.4			61.4			61.3	µs
	Time from ULVO to valid output data				-40°C to 125°C			61.3			61.4			61.4			61.3	

Copyright © 2026 Texas Instruments Incorporated

5.9 Switching Characteristics, V_{CCA} = 3.3 ± 0.3V

PARAMETER		TEST CONDITIONS	FROM	TO	Test Conditions	B-Port Supply Voltage (V_{CCB})												UNIT
						1.8 ± 0.15V			2.5 ± 0.2V			3.3 ± 0.3V			5.0 ± 0.5V			
						MIN	TYP	MAX	MIN	TYP	MAX	MIN	TYP	MAX	MIN	TYP	MAX	
t_{pd}	Propagation delay	1Mbps all 4 channels toggling	A	B	-40°C to 85°C	2.6		5.1	2.7		5.2	2.7		5.4	2.7		5.9	ns
			A	B	-40°C to 125°C	2.6		5.4	2.7		5.5	2.7		5.7	2.7		6.4	
PWD	Pulse width distortion	$\lvert t_{phl} - t_{plh} \rvert$	A	B	-40°C to 85°C	-0.06		0.6	-0.2		0.5	-0.2		0.5	-0.45		0.4	ns
			A	B	-40°C to 125°C	-0.06		0.6	-0.13		0.5	-0.19		0.5	-0.45		0.4	
t_r	output signal rise time		A	B	-40°C to 85°C	0.5		1.2	0.4		1.4	0.5		1.4	0.6		1.7	ns
			A	B	-40°C to 125°C	0.5		1.3	0.4		1.4	0.5		1.4	0.6		1.7	
tf	output signal fall time		A	B	-40°C to 85°C	0.4		1.3	0.4		1.4	0.4		1.5	0.4		1.8	ns
			A	B	-40°C to 125°C	0.4		1.3	0.4		1.5	0.4		1.6	0.4		2	
t_{DO}	Default output delay time from input power loss	Measured from the time VCC goes below 1.36V			-40°C to 85°C			7.9			7.8			7.7			7.5	µs
					-40°C to 125°C			7.9			7.8			7.7			7.5	µs
t_{PU}	Time from ULVO to valid output data				-40°C to 85°C			72.5			72.5			72.5			72.5	µs
					-40°C to 125°C			72.5			72.5			72.5			72.5	µs

5.10 Switching Characteristics, V_{CCA} = 5.0 ± 0.5V

PARAMETER		TEST CONDITIONS	FROM	TO	Test Conditions	B-Port Supply Voltage (V_{CCB})												UNIT
						1.8 ± 0.15V			2.5 ± 0.2V			3.3 ± 0.3V			5.0 ± 0.5V			
						MIN	TYP	MAX	MIN	TYP	MAX	MIN	TYP	MAX	MIN	TYP	MAX	
t_{pd}	Propagation delay	1Mbps all 4 channels toggling	A	B	-40°C to 85°C	2.6		4.8	2.7		4.9	2.6		5.2	2.7		5.7	ns
			A	B	-40°C to 125°C	2.6		5.1	2.7		5.3	2.6		5.5	2.7		6.1	
PWD	Pulse width distortion	$\lvert t_{phl} - t_{plh} \rvert$	A	B	-40°C to 85°C	-0.25		0.4	-0.25		0.3	-0.35		0.3	-0.6		0.2	ns
			A	B	-40°C to 125°C	-0.25		0.4	-0.3		0.3	-0.4		0.3	-0.65		0.2	
t_r	output signal rise time		A	B	-40°C to 85°C	0.5		1.25	0.4		1.3	0.5		1.35	0.6		1.7	ns
			A	B	-40°C to 125°C	0.5		1.3	0.4		1.3	0.5		1.4	0.6		1.7	
tf	output signal fall time		A	B	-40°C to 85°C	0.4		1.3	0.4		1.4	0.4		1.5	0.4		1.8	ns
			A	B	-40°C to 125°C	0.4		1.4	0.4		1.5	0.4		1.7	0.4		2.1	

Copyright © 2026 Texas Instruments Incorporated

PARAMETER		TEST CONDITIONS	FROM	TO	Test Conditions	B-Port Supply Voltage (V_{CCB})												UNIT
						1.8 ± 0.15V			2.5 ± 0.2V			3.3 ± 0.3V			5.0 ± 0.5V			
						MIN	TYP	MAX	MIN	TYP	MAX	MIN	TYP	MAX	MIN	TYP	MAX	
t_{DO}	Default output delay time from input power loss	Measured from the time VCC goes below 1.36V			-40°C to 85°C			7.9			7.8			7.7			7.5	µs
					-40°C to 125°C			7.9			7.8			7.7			7.5	
t_{PU}	Time from ULVO to valid output data				-40°C to 85°C			96.7			96.7			96.7			96.7	µs
					-40°C to 125°C			96.7			96.7			96.7			96.7	

5.11 Switching Characteristics: T_{sk}, T_{MAX}

over operating free-air temperature range (unless otherwise noted)

PARAMETER	TEST CONDITIONS		V_{CCI}	V_{CCO}	Operating free-air temperature (T_A) -40°C to 125°C			UNIT
					MIN	TYP	MAX	
T_{MAX} - Maximum Data Rate	50% Duty Cycle Input One channel switching 20% of pulse > 0.7*V_{CCO} 20% of pulse < 0.3*V_{CCO}	No Translation	1.65V - 1.95V	1.65V - 1.95V	264			Mbps
			2.3V - 2.7V	2.3V - 2.7V	220			
			3.0V - 3.6V	3.0V - 3.6V	220			
			4.5V - 5.5V	4.5V - 5.5V	176			
T_{MAX} - Maximum Data Rate	50% Duty Cycle Input One channel switching 20% of pulse > 0.7*V_{CCO} 20% of pulse < 0.3*V_{CCO}	Up Translation	1.65V - 1.95V	2.3V - 2.7V	264			Mbps
			1.65V - 1.95V	3.0V - 3.6V	264			
			1.65V - 1.95V	4.5V - 5.5V	264			
			2.3V - 2.7V	3.0V - 3.6V	220			
			2.3V - 2.7V	4.5V - 5.5V	220			
			3.0V - 3.6V	4.5V - 5.5V	176			
T_{MAX} - Maximum Data Rate	50% Duty Cycle Input One channel switching 20% of pulse > 0.7*V_{CCO} 20% of pulse < 0.3*V_{CCO}	Down Translation	2.3V - 2.7V	1.65V - 1.95V	264			Mbps
			3.0V - 3.6V	2.3V - 2.7V	220			
			3.0V - 3.6V	1.65V - 1.95V	220			
			4.5V - 5.5V	3.0V - 3.6V	176			
			4.5V - 5.5V	1.65V - 1.95V	220			
			4.5V - 5.5V	1.65V - 1.95V	220			

Copyright © 2026 Texas Instruments Incorporated

5.12 Typical Characteristics

T_A = 25°C (unless otherwise noted)

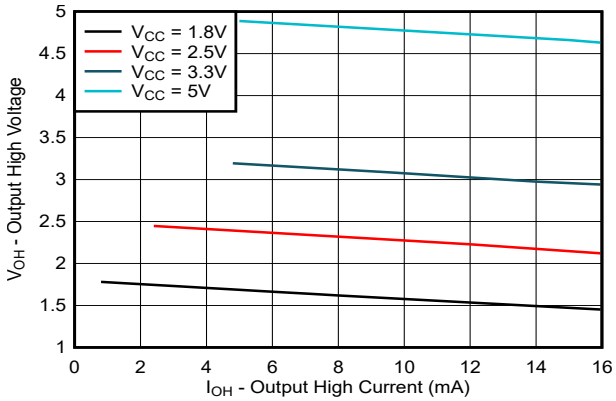

Figure 5-1. Output High Voltage (V_{OH}) vs Source Current (I_{OH})

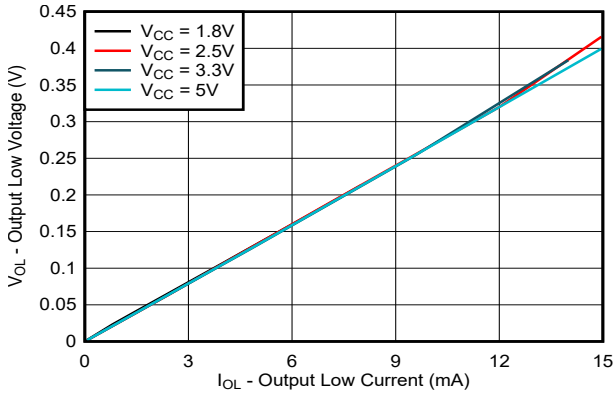

Figure 5-2. Output Low Voltage (V_{OL}) vs Sink Current (I_{OL})

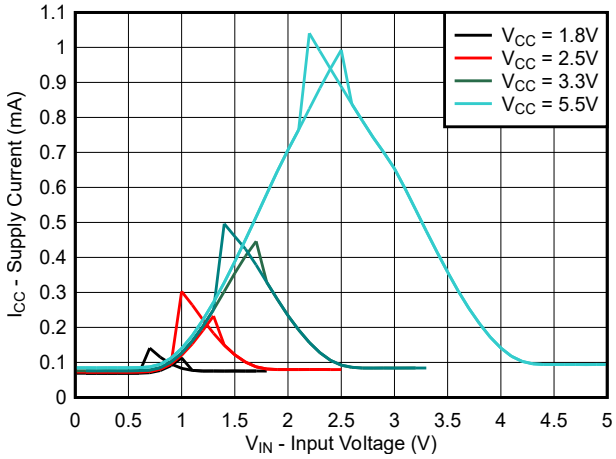

Figure 5-3. Supply Current (I_{CC}) vs Input Voltage (V_{IN}) [TXG0x010]

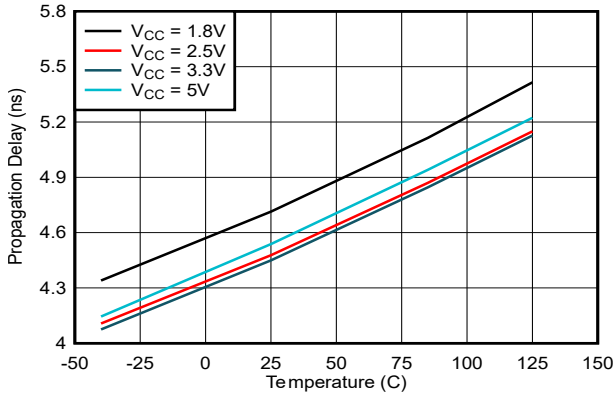

Figure 5-4. Propagation Delay, T_{PLH}, vs Temperature

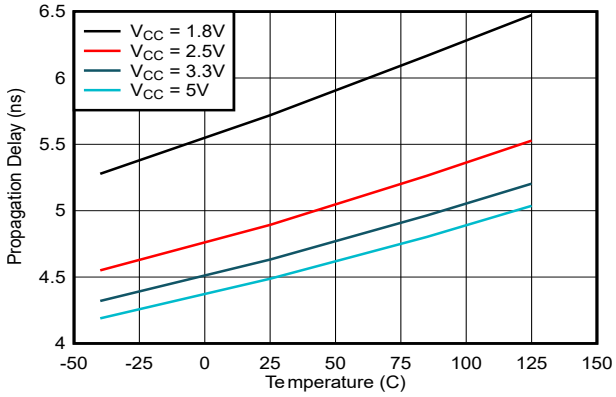

Figure 5-5. Propagation Delay, T_{PHL}, vs Temperature

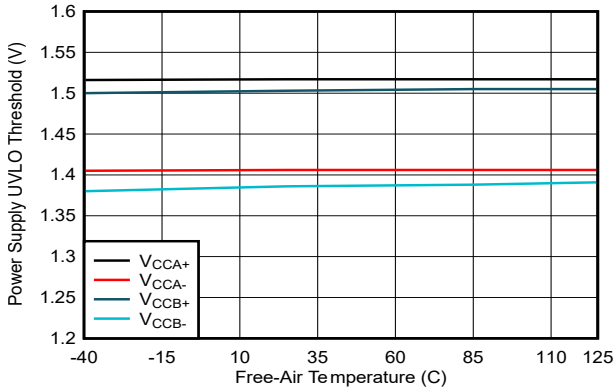

Figure 5-6. Power Supply Undervoltage Threshold vs Free-Air Temperature

6 Parameter Measurement Information

6.1 Load Circuit and Voltage Waveforms

Unless otherwise noted, generators supply all input pulses that have the following characteristics:

- f = 1MHz
- Z_O = 50Ω
- Δt/ΔV ≤ 1ns/V

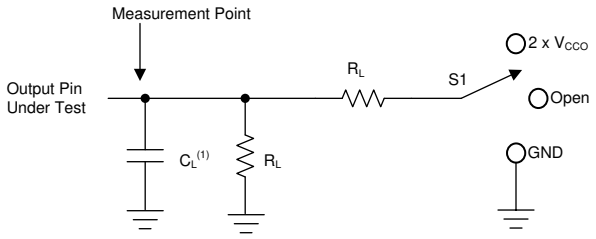

A. C_L includes probe and jig capacitance.

Figure 6-1. Load Circuit

Table 6-1. Load Circuit Conditions

Parameter	V_{CCO}	R_L	C_L	S_1	V_{TP}
t_{pd} Propagation (delay) time	1.71V – 5.5V	10kΩ	15pF	Open	N/A

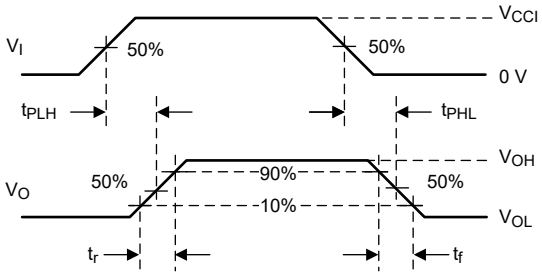

1. V_{CCI} is the supply pin associated with the input port.
2. V_{OH} and V_{OL} are typical output voltage levels that occur with specified R_L, C_L, and S_1

Figure 6-2. Switching Characteristics Voltage Waveforms

Copyright © 2026 Texas Instruments Incorporated

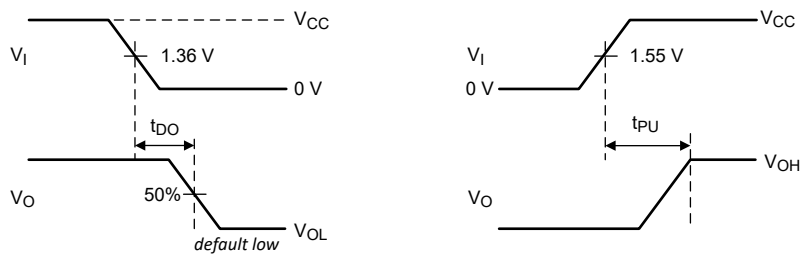

1. V_{CCI} is the supply pin associated with the input port.
2. V_{OH} and V_{OL} are typical output voltage levels that occur with specified R_L, C_L, and S_1

Figure 6-3. Default Output Delay Time & Time from UVLO to Valid Output Voltage Waveform

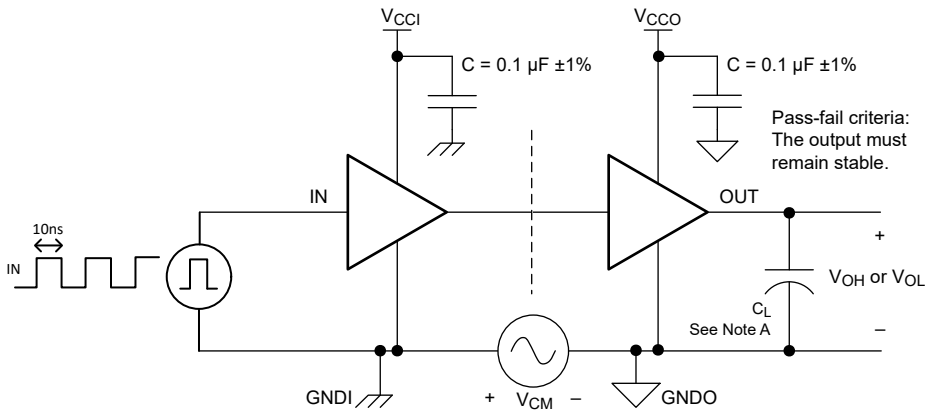

1. C_L = 15pF and includes instrumentation and fixture capacitance within ±20%.

Figure 6-4. Common-Mode Transient Immunity Test Circuit

7 Detailed Description

7.1 Overview

The TXG1010 is a 1-bit ground-level translator that uses two individually configurable power-supply rails which allows it to translate across two different power domains. The device is operational with V_{CCA} and V_{CCB} supplies as low as 1.71V and as high as 5.5V. The A port is designed to track V_{CCA} and the B port is designed to track V_{CCB}. In addition to I/O level shifting, this translator can support a difference of -10V to +10V between GNDA and GNDB. V_{CCA} is referenced to GNDA and V_{CCB} is referenced to GNDB.

The TXG1010 device is designed for asynchronous communication between data buses, and transmits data with fixed direction from the A bus to the B bus on some channels and from the B bus to the A bus on the remaining channels.

The V_{CC} disconnect feature is designed so that if V_{CC} is disconnected with the complementary supply within recommended operating conditions, outputs are disabled and set to the high-impedance state while the supply current is maintained. The $I_{off\text{-}float}$ circuitry is designed so that no excessive current is drawn from or sourced into an input or output while the supply is floating.

Glitch-free power supply sequencing allows either supply rail to be powered on or off in any order while providing robust power sequencing performance.

7.2 Functional Block Diagram

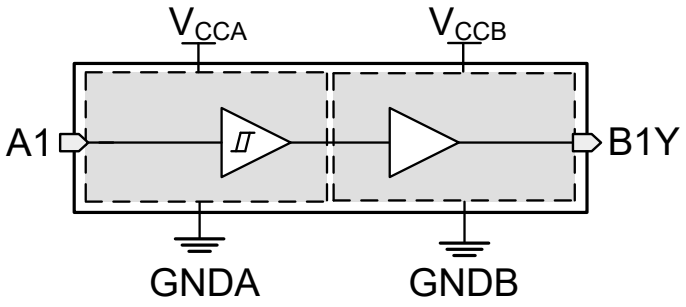

Figure 7-1. TXG1010 Functional Block Diagram

Copyright © 2026 Texas Instruments Incorporated

7.3 Feature Description

7.3.1 CMOS Schmitt-Trigger Inputs with Integrated Pulldowns

Standard CMOS inputs are high impedance and are typically modeled as a resistor in parallel with the input capacitance given in the *Section 5.5*. The worst case resistance is calculated with the maximum input voltage, given in the *Section 5.1*, and the maximum input leakage current, given in the *Section 5.5*, using ohm's law (R = V ÷ I).

The Schmitt-trigger input architecture provides hysteresis as defined by ΔV_T in the *Section 5.5*, which makes this device extremely tolerant to slow or noisy inputs. Driving the inputs slowly increases dynamic current consumption of the device. See *Understanding Schmitt Triggers* for additional information regarding Schmitt-trigger inputs.

7.3.1.1 Inputs with Integrated Static Pull-Down Resistors

This device has 5MΩ typical integrated weak pull-downs for each input. This feature allows all inputs to be left floating without the concern for unstable outputs or increased current consumption. This also helps to reduce external component count for applications where not all channels are used or need to be fixed low. If an external pull-up is required, it must be no larger than 1MΩ to avoid contention with the 5MΩ internal pull-down.

7.3.2 Balanced High-Drive CMOS Push-Pull Outputs

A balanced output allows the device to sink and source similar currents. The high drive capability of this device creates fast edges into light loads, so routing and load conditions must be considered to prevent ringing. Additionally, the outputs of this device are capable of driving larger currents than the device can sustain without being damaged. *Section 5.1* defines the electrical and thermal limits that must be followed at all times.

7.3.3 V_{CC} Disconnect

The outputs for this device are disabled and enter a high-impedance state when either supply is left floating (disconnected), and with the complementary supply within recommended operating conditions. It is recommended that the inputs are kept low before floating (disconnecting) either supply.

The $I_{CCx(floating)}$ in the *Section 5.5* specifies the maximum supply current. The $I_{off(float)}$ in the *Section 5.5* specifies the maximum leakage into or out of any input or output pin on the device.

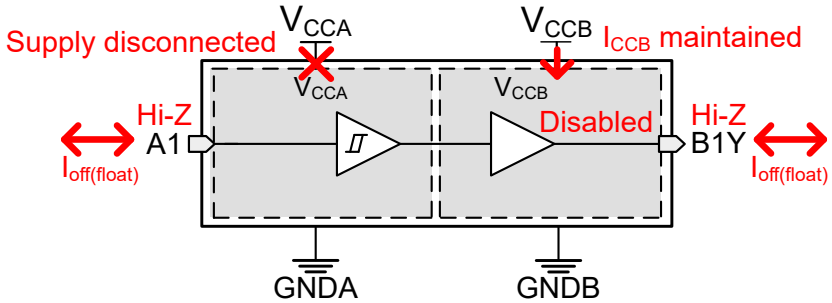

Figure 7-2. V_{CC} Disconnect Feature

7.3.4 Over-Voltage Tolerant Inputs

Input signals to this device can be driven above the supply voltage so long as they remain below the maximum input voltage value specified in the *Section 5.3*.

7.3.5 Glitch-Free Power Supply Sequencing

Either supply rail can be powered on or off in any order without producing a glitch on the inputs or outputs (that is, where the output erroneously transitions to V_{CC} when it must be held low or vice versa). Glitches of this nature can be misinterpreted by a peripheral as a valid data bit, which could trigger a false device reset of the peripheral, a false device configuration of the peripheral, or even a false data initialization by the peripheral.

Copyright © 2026 Texas Instruments Incorporated

7.3.6 Negative Clamping Diodes

Figure 7-3 depicts the inputs and outputs to this device that have negative clamping diodes.

CAUTION

Voltages beyond the values specified in the Section 5.1 table can cause damage to the device. The input negative-voltage and output voltage ratings may be exceeded if the input and output clamp-current ratings are observed.

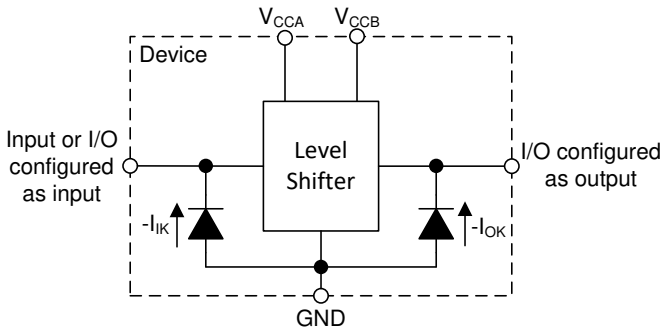

Figure 7-3. Electrical Placement of Clamping Diodes for Each Input and Output

7.3.7 Fully Configurable Dual-Rail Design

The V_{CCA} and V_{CCB} pins can be supplied at any voltage from 1.71V to 5.5V, making the device appropriate for translating between any of the voltage nodes (1.8V, 2.5V, 3.3V, and 5.0V).

7.3.8 Supports High-Speed Translation

The TXG1010 device can support high data-rate applications. The translated signal data rate can be greater than 250Mbps when the signal is translated from 1.71V to 5.5V.

7.3.9 AC Noise Rejection

TXG1010 supports I/O voltage translation in environments with noisy grounds. The plot below illustrates the amount of noise that GNDA and GNDB can reject in terms peak-to-peak voltage over frequency without disrupting communication between two systems. As an example, Figure 7-5 below shows GNDA with a ground bounce of $2V_{PP}$ at 10kHz but still effectively translating 5V to 2.5V without any degradation.

Copyright © 2026 Texas Instruments Incorporated

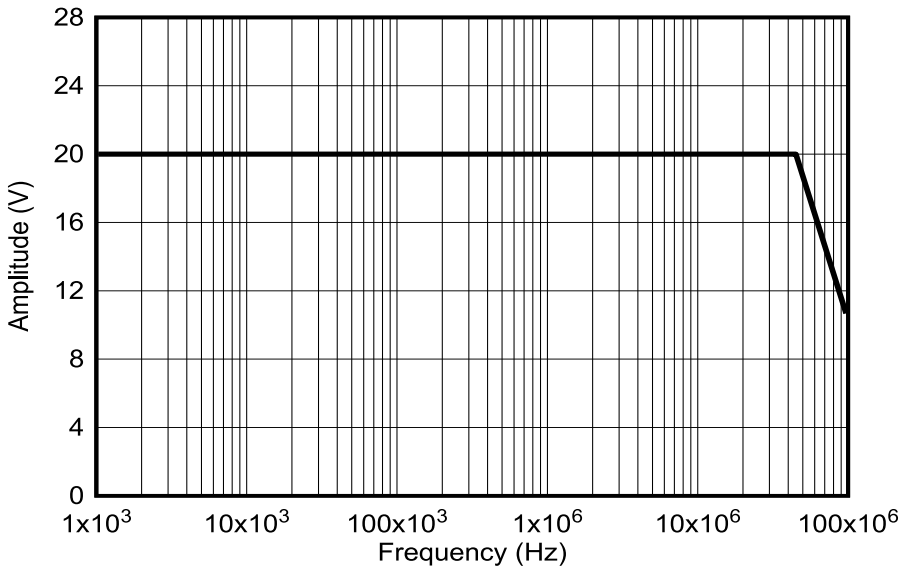

Figure 7-4. AC Noise Rejection Plot

Voltage:
V_{CCA} = 5V
V_{CCB} = 2.5V

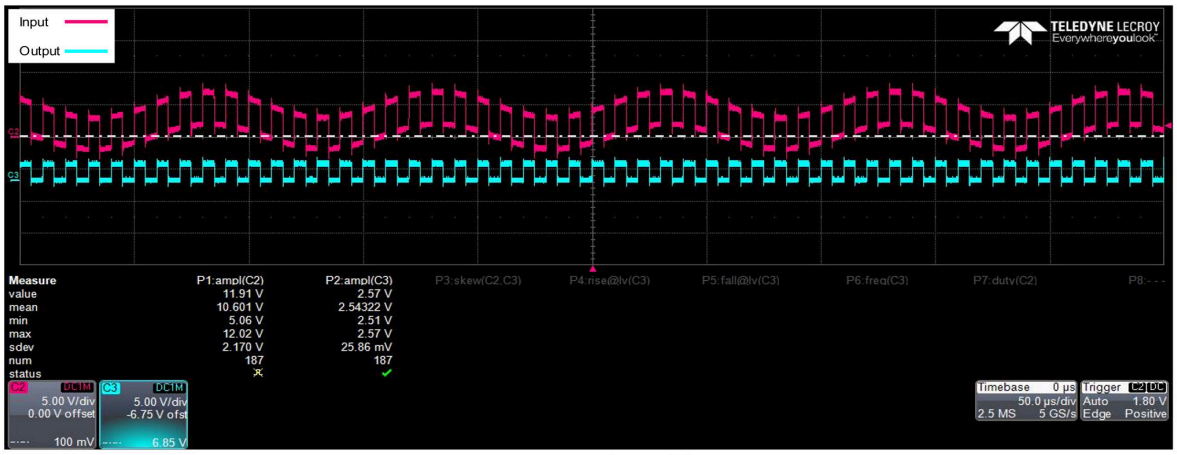

*Note: Offset voltage on the output to show both signals side-by-side

Figure 7-5. Waveform showing 5V to 2.5V I/O translation with AC Ground Noise of $2V_{PP}$ at 10kHz

7.4 Device Functional Modes

Table 7-1. Function Table

Power Supply[(1)]		Port Status	
VCCI	**VCCO**	**Input**	**Output**
PU	PU	H	H
PU	PU	L	L
PU	PU	Open	L
PD	PU	X	L

(1) PU = Powered Up; PD = Powered Down; X = Irrelevant; H = High Level; L = Low Level; Open = Floating

8 Application and Implementation

Note

Information in the following applications sections is not part of the TI component specification, and TI does not warrant its accuracy or completeness. TI's customers are responsible for determining suitability of components for their purposes, as well as validating and testing their design implementation to confirm system functionality.

8.1 Application Information

The TXG1010 is used for level translation, enabling communication between devices or systems operating at different interface and ground voltages. The TXG1010 device is ideal for use in applications where a push-pull driver is connected to the data inputs. Figure 8-1 is an example of two systems that translate from 1.8V to 3.3V while also seeing a ground shift of -3V on GNDB while GNDA is at 0V. The ground shift of 3V is from the noisy power ground of the Digital-to-Analog Converter (DAC).

8.2 Typical Application

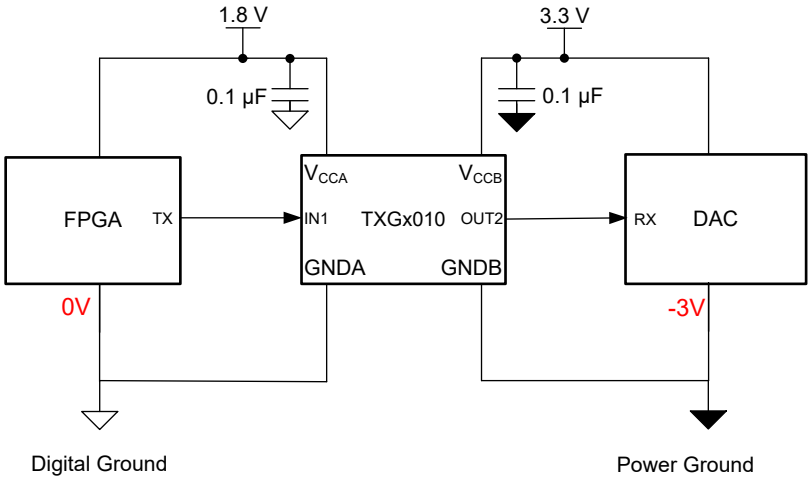

Figure 8-1. TXG1010 in Test and Measurement

8.2.1 Design Requirements

Use the parameters listed in Table 8-1 for this design example.

Table 8-1. Design Parameters

DESIGN PARAMETERS	EXAMPLE VALUES
Input voltage range	1.71V to 5.5V
Output voltage range	1.71V to 5.5V

8.2.2 Detailed Design Procedure

To begin the design process, determine the following:

- Input voltage range
  - Use the supply voltage of the device that is driving the TXG1010 device to determine the input voltage range. For a valid logic-high, the value must exceed the positive-going input-threshold voltage (V_{T+}) of the input port. For a valid logic low the value must be less than the negative-going input-threshold voltage (V_{T-}) of the input port.
- Output voltage range
  - Use the supply voltage of the device that the TXG1010 device is driving to determine the output voltage range.

Copyright © 2026 Texas Instruments Incorporated

8.2.3 Application Curves

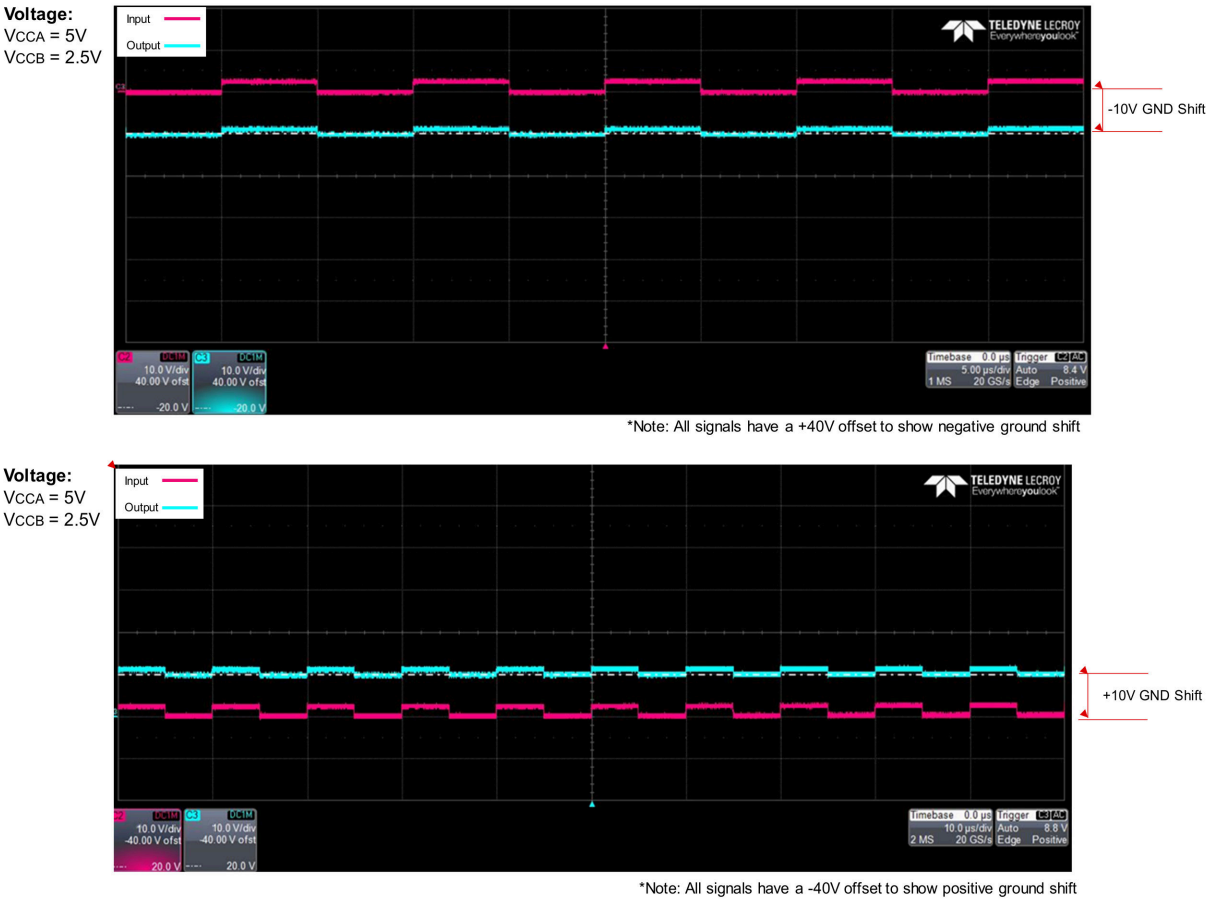

Figure 8-2. Waveform showing -10V (top) and +10V (bottom) Ground Shift with 5V to 2.5V I/O Translation

8.3 Power Supply Recommendations

Always apply a ground reference to the GND pins first. This device is designed for glitch free power sequencing without any supply sequencing requirements such as ramp order or ramp rate. Please make sure the difference between V_{CC} and GND remains at 6.5V max at all times.

8.4 Layout

8.4.1 Layout Guidelines

To ensure reliability of the device, following common printed-circuit board layout guidelines are recommended:

- Use bypass capacitors on the power supply pins and place them as close to the device as possible. A 0.1µF capacitor is recommended, but transient performance can be improved by having 1µF and 0.1µF capacitors in parallel as bypass capacitors.
- The high drive capability of this device creates fast edges into light loads so routing and load conditions must be considered to prevent ringing.
- A 0.1µF capacitor can be added between GNDA and GNDB to improve performances of CMTI.

8.4.2 Layout Example

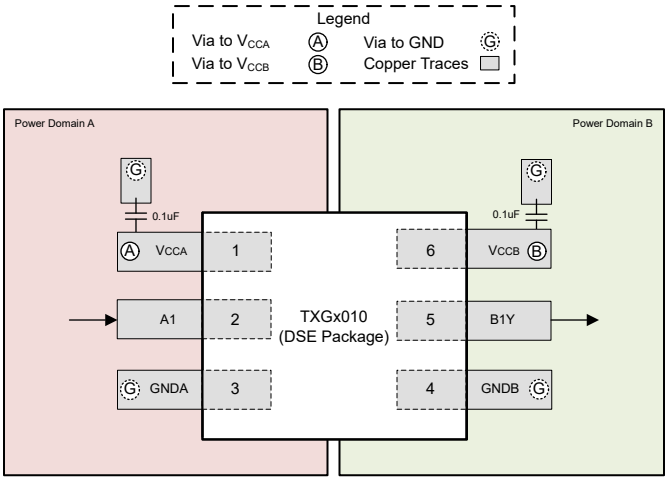

Figure 8-3. D Layout Example

Copyright © 2026 Texas Instruments Incorporated

9 Device and Documentation Support

9.1 Device Support

9.2 Documentation Support

9.2.1 Related Documentation

For related documentation, see the following:

- Texas Instruments, *Understanding Schmitt Triggers* application report
- Texas Instruments, *CMOS Power Consumption and C_{pd} Calculation* application report

9.3 Receiving Notification of Documentation Updates

To receive notification of documentation updates, navigate to the device product folder on ti.com. Click on *Notifications* to register and receive a weekly digest of any product information that has changed. For change details, review the revision history included in any revised document.

9.4 Support Resources

TI E2E™ support forums are an engineer's go-to source for fast, verified answers and design help — straight from the experts. Search existing answers or ask your own question to get the quick design help you need.

Linked content is provided "AS IS" by the respective contributors. They do not constitute TI specifications and do not necessarily reflect TI's views; see TI's Terms of Use.

9.5 Trademarks

TI E2E™ is a trademark of Texas Instruments.
All trademarks are the property of their respective owners.

9.6 Electrostatic Discharge Caution

This integrated circuit can be damaged by ESD. Texas Instruments recommends that all integrated circuits be handled with appropriate precautions. Failure to observe proper handling and installation procedures can cause damage.

ESD damage can range from subtle performance degradation to complete device failure. Precision integrated circuits may be more susceptible to damage because very small parametric changes could cause the device not to meet its published specifications.

9.7 Glossary

TI Glossary This glossary lists and explains terms, acronyms, and definitions.

10 Revision History

NOTE: Page numbers for previous revisions may differ from page numbers in the current version.

Changes from Revision * (February 2026) to Revision A (September 2026) **Page**

- Updated thermal numbers..... 5

DATE	REVISION	NOTES
February 2026	*	Initial Release

11 Mechanical, Packaging, and Orderable Information

The following pages include mechanical, packaging, and orderable information. This information is the most current data available for the designated devices. This data is subject to change without notice and revision of this document. For browser-based versions of this data sheet, refer to the left-hand navigation.

Copyright © 2026 Texas Instruments Incorporated

PACKAGING INFORMATION

Orderable part number	Status (1)	Material type (2)	Package | Pins	Package qty | Carrier	RoHS (3)	Lead finish/ Ball material (4)	MSL rating/ Peak reflow (5)	Op temp (°C)	Part marking (6)
TXG1010DSER	Active	Production	WSON (DSE) | 6	3000 | LARGE T&R	Yes	NIPDAU	Level-1-260C-UNLIM	-40 to 125	TL

(1) **Status:** For more details on status, see our product life cycle.

(2) **Material type:** When designated, preproduction parts are prototypes/experimental devices, and are not yet approved or released for full production. Testing and final process, including without limitation quality assurance, reliability performance testing, and/or process qualification, may not yet be complete, and this item is subject to further changes or possible discontinuation. If available for ordering, purchases will be subject to an additional waiver at checkout, and are intended for early internal evaluation purposes only. These items are sold without warranties of any kind.

(3) **RoHS values:** Yes, No, RoHS Exempt. See the TI RoHS Statement for additional information and value definition.

(4) **Lead finish/Ball material:** Parts may have multiple material finish options. Finish options are separated by a vertical ruled line. Lead finish/Ball material values may wrap to two lines if the finish value exceeds the maximum column width.

(5) **MSL rating/Peak reflow:** The moisture sensitivity level ratings and peak solder (reflow) temperatures. In the event that a part has multiple moisture sensitivity ratings, only the lowest level per JEDEC standards is shown. Refer to the shipping label for the actual reflow temperature that will be used to mount the part to the printed circuit board.

(6) **Part marking:** There may be an additional marking, which relates to the logo, the lot trace code information, or the environmental category of the part.

Multiple part markings will be inside parentheses. Only one part marking contained in parentheses and separated by a "~" will appear on a part. If a line is indented then it is a continuation of the previous line and the two combined represent the entire part marking for that device.

Important Information and Disclaimer: The information provided on this page represents TI's knowledge and belief as of the date that it is provided. TI bases its knowledge and belief on information provided by third parties, and makes no representation or warranty as to the accuracy of such information. Efforts are underway to better integrate information from third parties. TI has taken and continues to take reasonable steps to provide representative and accurate information but may not have conducted destructive testing or chemical analysis on incoming materials and chemicals. TI and TI suppliers consider certain information to be proprietary, and thus CAS numbers and other limited information may not be available for release.

In no event shall TI's liability arising out of such information exceed the total purchase price of the TI part(s) at issue in this document sold by TI to Customer on an annual basis.

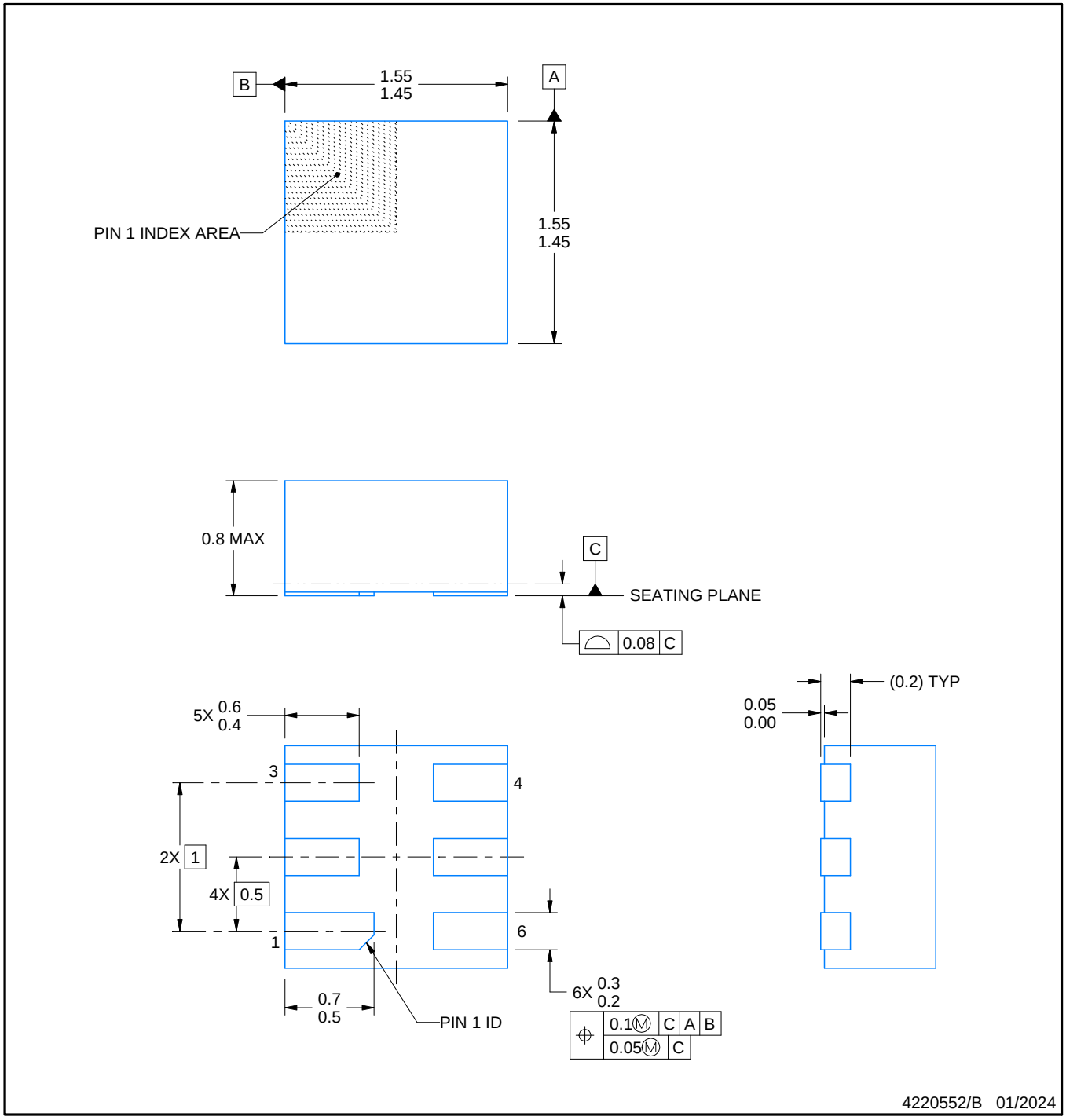

NOTES:

1. All linear dimensions are in millimeters. Any dimensions in parenthesis are for reference only. Dimensioning and tolerancing per ASME Y14.5M.
2. This drawing is subject to change without notice.

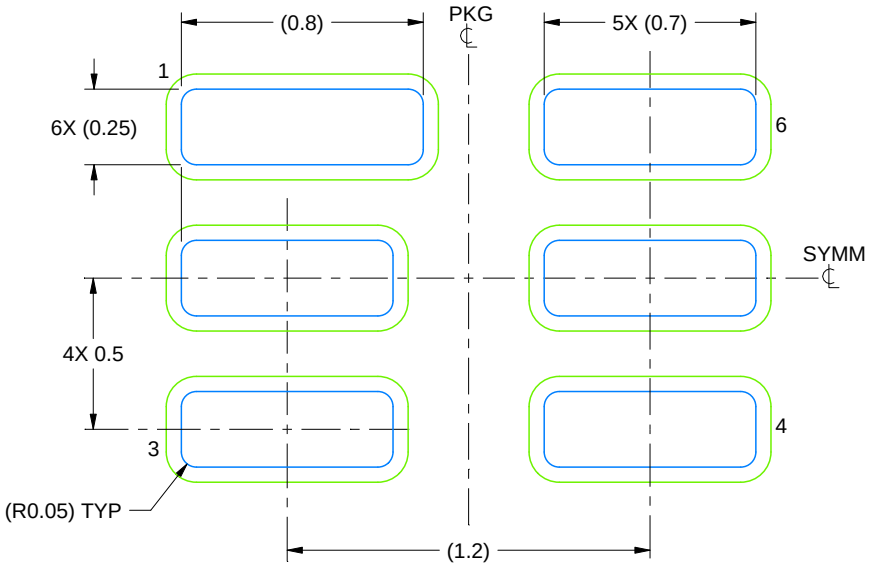

LAND PATTERN EXAMPLE
SCALE:40X

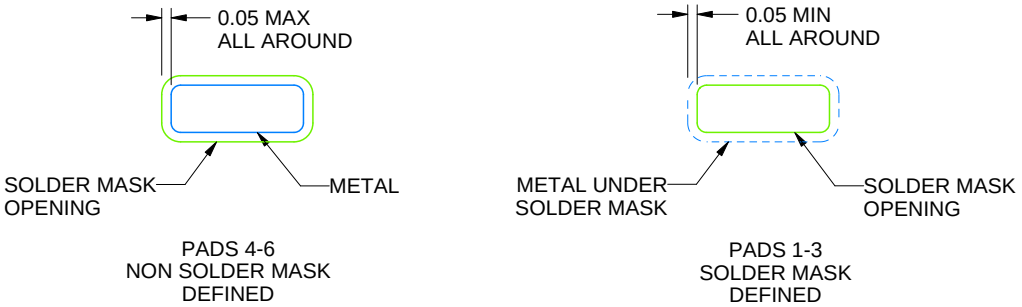

SOLDER MASK DETAILS

4220552/B 01/2024

NOTES: (continued)

3. For more information, see Texas Instruments literature number SLUA271 (www.ti.com/lit/slua271).

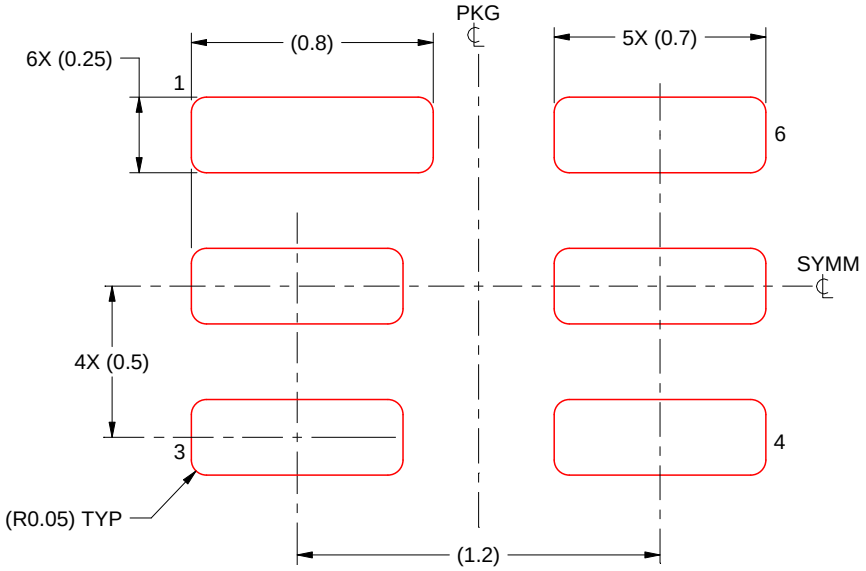

SOLDER PASTE EXAMPLE
BASED ON 0.125 mm THICK STENCIL
SCALE:40X

NOTES: (continued)

4. Laser cutting apertures with trapezoidal walls and rounded corners may offer better paste release. IPC-7525 may have alternate design recommendations.

IMPORTANT NOTICE AND DISCLAIMER

TI PROVIDES TECHNICAL AND RELIABILITY DATA (INCLUDING DATASHEETS), DESIGN RESOURCES (INCLUDING REFERENCE DESIGNS), APPLICATION OR OTHER DESIGN ADVICE, WEB TOOLS, SAFETY INFORMATION, AND OTHER RESOURCES “AS IS” AND WITH ALL FAULTS, AND DISCLAIMS ALL WARRANTIES, EXPRESS AND IMPLIED, INCLUDING WITHOUT LIMITATION ANY IMPLIED WARRANTIES OF MERCHANTABILITY, FITNESS FOR A PARTICULAR PURPOSE OR NON-INFRINGEMENT OF THIRD PARTY INTELLECTUAL PROPERTY RIGHTS.

These resources are intended for skilled developers designing with TI products. You are solely responsible for (1) selecting the appropriate TI products for your application, (2) designing, validating and testing your application, and (3) ensuring your application meets applicable standards, and any other safety, security, regulatory or other requirements.

These resources are subject to change without notice. TI grants you permission to use these resources only for development of an application that uses the TI products described in the resource. Other reproduction and display of these resources is prohibited. No license is granted to any other TI intellectual property right or to any third party intellectual property right. TI disclaims responsibility for, and you fully indemnify TI and its representatives against any claims, damages, costs, losses, and liabilities arising out of your use of these resources.

TI’s products are provided subject to TI’s Terms of Sale, TI’s General Quality Guidelines, or other applicable terms available either on ti.com or provided in conjunction with such TI products. TI’s provision of these resources does not expand or otherwise alter TI’s applicable warranties or warranty disclaimers for TI products. Unless TI explicitly designates a product as custom or customer-specified, TI products are standard, catalog, general purpose devices.

TI objects to and rejects any additional or different terms you may propose.

Copyright © 2026, Texas Instruments Incorporated

Last updated 10/2025