TXB0106 6-Bit Bidirectional Level-Shifting and Voltage Translator With Auto-Direction Sensing and ±15kV ESD Protection

1 Features

- 1.2V to 3.6V on A port and 1.65 to 5.5V on B Port ($V_{CCA} \leq V_{CCB}$)
- V_{CC} isolation feature – if either V_{CC} input is at GND, all outputs are in the high-impedance state
- OE input circuit referenced to V_{CCA}
- Low-power consumption, 4µA max I_{CC}
- I_{off} supports partial-power-down mode operation
- Latch-up performance exceeds 100mA per JESD 78, class II
- ESD protection exceeds JESD 22
  - A port
    - 2500V human body model (A114-B)
    - 150V machine model (A115-A)
    - 1500V charged-device model (C101)
  - B port
    - ±15kV human body model (A114-B)
    - 150V machine model (A115-A)
    - 1500V charged-device model (C101)

2 Applications

- Headset
- Smartphone
- Tablet
- Desktop PC

3 Description

This 6-bit noninverting translator uses two separate configurable power-supply rails. The A port is designed to track V_{CCA}. V_{CCA} accepts any supply voltage from 1.2V to 3.6V. The B port is designed to track V_{CCB}. V_{CCB} accepts any supply voltage from 1.65V to 5.5V. This allows for universal low-voltage bidirectional translation between any of the 1.2V, 1.5V, 1.8V, 2.5V, 3.3V, and 5V voltage nodes. V_{CCA} must not exceed V_{CCB}.

When the output-enable (OE) input is low, all outputs are placed in the high-impedance state.

The TXB0106 is designed so that the OE input circuit is supplied by V_{CCA}.

This device is fully specified for partial-power-down applications using I_{off}. The I_{off} circuitry disables the outputs, preventing damaging current backflow through the device during power down.

To verify the high-impedance state during power up or power down, tie the OE to the GND through a pulldown resistor; the minimum value of the resistor is determined by the current-sourcing capability of the driver.

Package Information

PART NUMBER	PACKAGE (1)	PACKAGE SIZE(2)
TXB0106	PW (TSSOP, 16)	5.00mm × 4.40mm
	RGY (VQFN, 16)	4.00mm × 3.50mm
	RSV (UQFN, 16)	2.60mm × 1.80mm
	BQB (WQFN, 16)	3.50mm × 2.50mm
	DYY (SOT, 16)	4.20mm × 2.00mm

(1) For more information, see Section 11.
(2) The package size (length × width) is a nominal value and includes pins, where applicable.

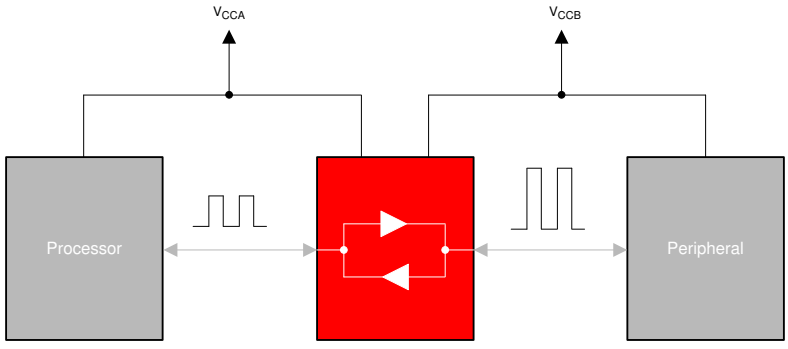

Typical Application Block Diagram for TXB010X

An IMPORTANT NOTICE at the end of this data sheet addresses availability, warranty, changes, use in safety-critical applications, intellectual property matters and other important disclaimers. PRODUCTION DATA.

Table of Contents

1 Features....1
2 Applications....1
3 Description....1
4 Pin Configuration and Functions....3
5 Specifications....5
5.1 Absolute Maximum Ratings....5
5.2 ESD Ratings....5
5.3 Recommended Operating Conditions....5
5.4 Thermal Information....6
5.5 Electrical Characteristics (BQB/RSV/DYY)....6
5.6 Electrical Characteristics (Other Packages)....7
5.7 Timing Requirements: V_{CCA} = 1.2V....7
5.8 Timing Requirements: V_{CCA} = 1.5V ± 0.1V....8
5.9 Timing Requirements: V_{CCA} = 1.8V ± 0.15V....8
5.10 Timing Requirements: V_{CCA} = 2.5V ± 0.2V....8
5.11 Timing Requirements: V_{CCA} = 3.3V ± 0.3V....8
5.12 Switching Characteristics: V_{CCA} = 1.2V (BQB/RSV/DYY)....8
5.13 Switching Characteristics: V_{CCA} = 1.2V (Other Packages)....9
5.14 Switching Characteristics: V_{CCA} = 1.5V ± 0.1V (BQB/RSV/DYY)....9
5.15 Switching Characteristics: V_{CCA} = 1.5V ± 0.1V (Other Packages)....9
5.16 Switching Characteristics: V_{CCA} = 1.8V ± 0.15V (BQB/RSV/DYY)....10
5.17 Switching Characteristics: V_{CCA} = 1.8V ± 0.15V (Other Packages)....10
5.18 Switching Characteristics: V_{CCA} = 2.5V ± 0.2V (BQB/RSV/DYY)....10
5.19 Switching Characteristics: V_{CCA} = 2.5V ± 0.2V (Other Packages)....11
5.20 Switching Characteristics: V_{CCA} = 3.3V ± 0.3V (BQB/RSV/DYY)....11
5.21 Switching Characteristics: V_{CCA} = 3.3V ± 0.3V (Other Packages)....12
5.22 Operating Characteristics....12
5.23 Typical Characteristics....13
6 Parameter Measurement Information....14
7 Detailed Description....14
7.1 Overview....14
7.2 Functional Block Diagram....15
7.3 Feature Description....16
7.4 Device Functional Modes....18
8 Application and Implementation....19
8.1 Application Information....19
8.2 Typical Application....19
8.3 Power Supply Recommendations....21
8.4 Layout....21
9 Device and Documentation Support....23
9.1 Documentation Support....23
9.2 Receiving Notification of Documentation Updates....23
9.3 Support Resources....23
9.4 Trademarks....23
9.5 Electrostatic Discharge Caution....23
9.6 Glossary....23
10 Revision History....23
11 Mechanical, Packaging, and Orderable Information....24

Copyright © 2025 Texas Instruments Incorporated

4 Pin Configuration and Functions

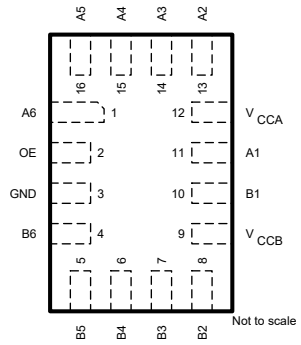

Figure 4-1. RSV Package, 16-Pin UQFN (Top View)

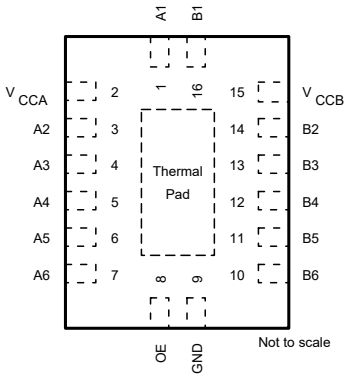

Figure 4-2. BQB Package, 16-Pin WQFN With Exposed Thermal Pad (Top View)

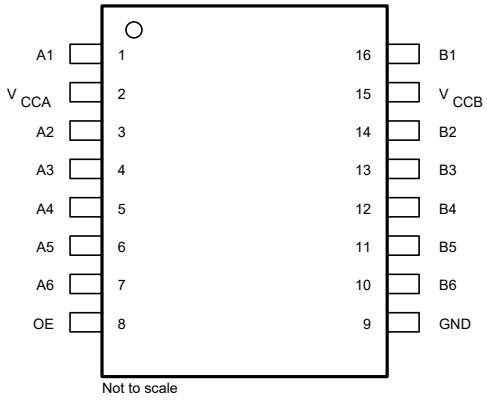

Figure 4-3. DYY Package, 16-Pin SOT (Top View)

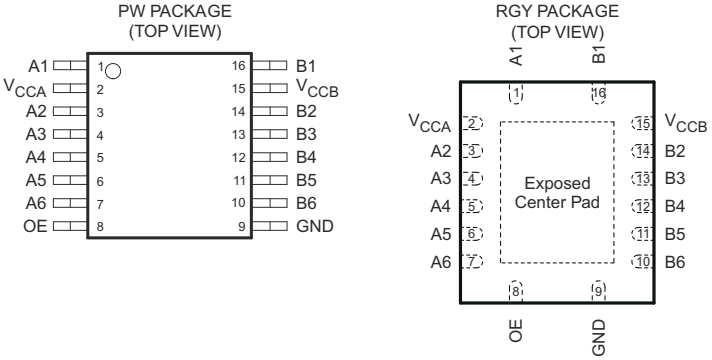

Figure 4-4. PW, RGY Package (Top View)

A. The exposed center pad, if used, must be connected as a secondary ground or left electrically open.
B. Pull up resistors are not required on both sides for Logic I/O.
C. If pull up or pull down resistors are needed, the resistor value must be over 50kΩ.
D. 50kΩ is a safe recommended value, if the user can accept higher Vol or lower Voh, smaller pull up or pull down resistor is allowed, the draft estimation is $V_{OL} = V_{CCOUT} \times 4.5k \div (4.5k + R_{PU})$ and $V_{OH} = V_{CCOUT} \times R_{DW} \div (4.5k + R_{DW})$.
E. If pull up resistors are needed, please refer to the TXS0108 (different package with TXB0106), or contact TI.
F. For detailed information, please refer to the *A Guide to Voltage Translation With TXB-Type Translators* application note.

Copyright © 2025 Texas Instruments Incorporated

Table 4-1. Pin Functions

PIN			I/O	DESCRIPTION
NO.	NO. (RSV)	NAME		
1	11	A1		Input/output 1. Referenced to V_{CCA}.
2	12	V_{CCA}	-	A-port supply voltage. 1.2V ≤ V_{CCA}≤ 3.6V, V_{CCA}≤ V_{CCB}.
3	13	A2	I/O	Input/output 2. Referenced to V_{CCA}.
4	14	A3	I/O	Input/output 3. Referenced to V_{CCA}.
5	15	A4	I/O	Input/output 4. Referenced to V_{CCA}.
6	16	A5	I/O	Input/output 5. Referenced to V_{CCA}.
7	1	A6	I/O	Input/output 6. Referenced to V_{CCA}.
8	2	OE	-	Output enable. Pull OE low to place all outputs in tri-state mode. Referenced to V_{CCA}.
9	3	GND	-	Ground
10	4	B6	I/O	Input/output 6. Referenced to V_{CCB}.
11	5	B5	I/O	Input/output 5. Referenced to V_{CCB}.
12	6	B4	I/O	Input/output 4. Referenced to V_{CCB}.
13	7	B3	I/O	Input/output 3. Referenced to V_{CCB}.
14	8	B2	I/O	Input/output 2. Referenced to V_{CCB}.
15	9	V_{CCB}	-	B-port supply voltage. 1.65V ≤ V_{CCB} ≤ 5.5V.
16	10	B1	I/O	Input/output 1. Referenced to V_{CCB}.

Copyright © 2025 Texas Instruments Incorporated

5 Specifications

5.1 Absolute Maximum Ratings

over operating free-air temperature range (unless otherwise noted)(1)

			MIN	MAX	UNIT
V_{CCA}	Supply voltage		–0.5	4.6	V
V_{CCB}	Supply voltage		–0.5	6.5	V
V_I	Input voltage(2)		–0.5	6.5	V
V_O	Voltage applied to any output in the high-impedance or power-off state(2)		–0.5	6.5	V
V_O	Voltage applied to any output in the high or low state(2) (3)	A inputs	–0.5	V_{CCA} + 0.5	V
		B inputs	–0.5	V_{CCB} + 0.5	
I_{IK}	Input clamp current	V_I < 0		–50	mA
I_{OK}	Output clamp current	V_O < 0		–50	mA
I_O	Continuous output current			±50	mA
	Continuous current through V_{CCA}, V_{CCB}, or GND			±100	mA
T_J	Junction Temperature		-40	150	°C
T_{stg}	Storage temperature		–65	150	°C

(1) Stresses beyond those listed under *Absolute Maximum Ratings* may cause permanent damage to the device. These are stress ratings only, and functional operation of the device at these or any other conditions beyond those indicated under *Recommended Operating Conditions* is not implied. Exposure to absolute-maximum-rated conditions for extended periods may affect device reliability.
(2) The input and output negative-voltage ratings may be exceeded if the input and output current ratings are observed.
(3) The value of V_{CCA} and V_{CCB} are provided in the recommended operating conditions table.

5.2 ESD Ratings

				VALUE	UNIT
$V_{(ESD)}$	Electrostatic discharge	Human body model (HBM), per ANSI/ESDA/JEDEC JS-001(1)	A Port	2500	V
			B Port	±15000	
		Charged-device model (CDM), per JEDEC specification JESD22-C101(2)	A Port	1500	
			B Port		
		Machine model (A115-A)	A Port	150	
			B Port		

(1) JEDEC document JEP155 states that 500V HBM allows safe manufacturing with a standard ESD control process.
(2) JEDEC document JEP157 states that 250V CDM allows safe manufacturing with a standard ESD control process.

5.3 Recommended Operating Conditions

			V_{CCA}	V_{CCB}	MIN	MAX	UNIT
V_{CCA}	Supply voltage				1.2	3.6	V
V_{CCB}					1.65	5.5	
V_{IH}	High-level input voltage	Data inputs	1.2V to 3.6V	1.65V to 5.5V	V_{CCI} × 0.65(1)	V_{CCI}	V
		OE			V_{CCA} × 0.65	5.5	
V_{IL}	Low-level input voltage	Data inputs	1.2V to 5.5V	1.65V to 5.5V	0	V_{CCI} × 0.35(1)	V
		OE	1.2V to 3.6V		0	V_{CCA} × 0.35	
Δt/Δv	Input transition rise or fall rate	A-port inputs	1.2V to 3.6V	1.65V to 5.5V		40	ns/V
		B-port inputs	1.2V to 3.6V	1.65V to 3.6V		40	
				4.5V to 5.5V		30	
T_A	Operating free-air temperature				–40	85	°C

(1) V_{CCI} is the supply voltage associated with the input port.

Copyright © 2025 Texas Instruments Incorporated

5.4 Thermal Information

THERMAL METRIC (1)		TXB0106					UNIT
		PW (TSSOP)	RGY (VQFN)	RSV (UQFN)	BQB(WQFN)	DYY (SOT)	
		16 PINS	16 PINS	16 PINS	16 PINS	16 PINS	
$R_{\theta JA}$	Junction-to-ambient thermal resistance	107.2	40.7	134.5	63.4	132.0	°C/W
$R_{\theta JC(top)}$	Junction-to-case (top) thermal resistance	34.9	54.1	58.0	64.3	65.4	°C/W
$R_{\theta JB}$	Junction-to-board thermal resistance	13.3	20.9	62.5	33.6	63.5	°C/W
ψ_{JT}	Junction-to-top characterization parameter	0.5	1.1	1.8	2.8	4.0	°C/W
ψ_{JB}	Junction-to-board characterization parameter	13.3	20.9	62.3	33.6	63.3	°C/W
$R_{\theta JC(bot)}$	Junction-to-case (bottom) thermal resistance	2.7	6.7	N/A	16.2	N/A	°C/W

(1) For more information about traditional and new thermal metrics, see the *Semiconductor and IC Package Thermal Metrics* application note.

5.5 Electrical Characteristics (BQB/RSV/DYY)

over recommended operating free-air temperature range (unless otherwise noted)(1) (2)

PARAMETER		TEST CONDITIONS	V_{CCA}	V_{CCB}	T_A = 25°C			–40°C to 85°C		UNIT
					MIN	TYP	MAX	MIN	MAX	
V_{OHA}		I_{OH} = –20µA	1.2V			1.1				V
			1.4V to 3.6V					V_{CCA}– 0.4		
V_{OLA}		I_{OL} = 20µA	1.2V			0.9				V
			1.4V to 3.6V						0.4	
V_{OHB}		I_{OH} = –20µA		1.65V to 5.5V				V_{CCB}– 0.4		V
V_{OLB}		I_{OL} = 20µA		1.65V to 5.5V					0.4	V
I_I	OE		1.2V to 3.6V	1.65V to 5.5V			±1		±2	µA
I_{off}	A port		0V	0V to 5.5V			±1		±2	µA
	B port		0V to 3.6V	0V			±1		±2	
I_{OZ}	A or B port	OE = GND	1.2V to 3.6V	1.65V to 5.5V			±1		±2	µA
I_{CCA}		V_I = V_{CCI} or GND, I_O = 0	1.2V	1.65V to 5.5V		0.4				µA
			1.4V to 3.6V						5	
			3.6V	0V					2.75	
			0V	5.5V					-2	
I_{CCB}		V_I = V_{CCI} or GND, I_O = 0	1.2V	1.65V to 5.5V		3.4				µA
			1.4V to 3.6V						7.75	
			3.6V	0V					–2	
			0V	5.5V					7.1	
I_{CCA} + I_{CCB}		V_I = V_{CCI} or GND, I_O = 0	1.2V	1.65V to 5.5V		3.5				µA
			1.4V to 3.6V						10.4	
I_{CCZA}		V_I = V_{CCI} or GND, I_O = 0, OE = GND	1.2V	1.65V to 5.5V		0.4				µA
			1.4V to 3.6V						5	
I_{CCZB}		V_I = V_{CCI} or GND, I_O = 0, OE = GND	1.2V	1.65V to 5.5V		3.3				µA
			1.4V to 3.6V						7.6	
C_I	OE		1.2V to 3.6V	1.65V to 5.5V		5			6.5	pF
C_{io}	A port		1.2V to 3.6V	1.65V to 5.5V		5			6.5	pF
	B port					8			13.1	

Copyright © 2025 Texas Instruments Incorporated

5.6 Electrical Characteristics (Other Packages)

over recommended operating free-air temperature range (unless otherwise noted)(1) (2)

PARAMETER		TEST CONDITIONS	V_{CCA}	V_{CCB}	T_A = 25°C			–40°C to 85°C		UNIT
					MIN	TYP	MAX	MIN	MAX	
V_{OHA}		I_{OH} = –20µA	1.2V			1.1				V
			1.4V to 3.6V					V_{CCA}– 0.4		
V_{OLA}		I_{OL} = 20µA	1.2V			0.9				V
			1.4V to 3.6V						0.4	
V_{OHB}		I_{OH} = –20µA		1.65V to 5.5V				V_{CCB}– 0.4		V
V_{OLB}		I_{OL} = 20µA		1.65V to 5.5V					0.4	V
I_I	OE		1.2V to 3.6V	1.65V to 5.5V			±1		±2	µA
I_{off}	A port		0V	0V to 5.5V			±1		±2	µA
	B port		0V to 3.6V	0V			±1		±2	
I_{OZ}	A or B port	OE = GND	1.2V to 3.6V	1.65V to 5.5V			±1		±2	µA
I_{CCA}		V_I = V_{CCI} or GND, I_O = 0	1.2V	1.65V to 5.5V		0.06				µA
			1.4V to 3.6V						5	
			3.6V	0V					2	
			0V	5.5V					2	
I_{CCB}		V_I = V_{CCI} or GND, I_O = 0	1.2V	1.65V to 5.5V		3.4				µA
			1.4V to 3.6V						5	
			3.6V	0V					–2	
			0V	5.5V					2	
I_{CCA} + I_{CCB}		V_I = V_{CCI} or GND, I_O = 0	1.2V	1.65V to 5.5V		3.5				µA
			1.4V to 3.6V						10	
I_{CCZA}		V_I = V_{CCI} or GND, I_O = 0, OE = GND	1.2V	1.65V to 5.5V		0.05				µA
			1.4V to 3.6V						5	
I_{CCZB}		V_I = V_{CCI} or GND, I_O = 0, OE = GND	1.2V	1.65V to 5.5V		3.3				µA
			1.4V to 3.6V						5	
C_I	OE		1.2V to 3.6V	1.65V to 5.5V		5			5.5	pF
C_{io}	A port		1.2V to 3.6V	1.65V to 5.5V		5			6.5	pF
	B port					8			10	

(1) V_{CCI} is the supply voltage associated with the input port.
(2) V_{CCO} is the supply voltage associated with the output port.

5.7 Timing Requirements: V_{CCA} = 1.2V

T_A = 25°C, V_{CCA} = 1.2V

			V_{CCB} = 1.8V	V_{CCB} = 2.5V	V_{CCB} = 3.3V	V_{CCB} = 5V	UNIT
			NOM	NOM	NOM	NOM	
	Data rate		20	20	20	20	Mbps
t_w	Pulse duration	Data inputs	50	50	50	50	ns

Copyright © 2025 Texas Instruments Incorporated

5.8 Timing Requirements: V_{CCA} = 1.5V ± 0.1V

over recommended operating free-air temperature range, V_{CCA} = 1.5V ± 0.1V (unless otherwise noted)

			V_{CCB} = 1.8V ± 0.15V		V_{CCB} = 2.5V ± 0.2V		V_{CCB} = 3.3V ± 0.3V		V_{CCB} = 5V ± 0.5V		UNIT
			MIN	MAX	MIN	MAX	MIN	MAX	MIN	MAX	
	Data rate			50		50		50		50	Mbps
t_w	Pulse duration	Data inputs	20		20		20		20		ns

5.9 Timing Requirements: V_{CCA} = 1.8V ± 0.15V

over recommended operating free-air temperature range, V_{CCA} = 1.8V ± 0.15V (unless otherwise noted)

			V_{CCB} = 1.8V ± 0.15V		V_{CCB} = 2.5V ± 0.2V		V_{CCB} = 3.3V ± 0.3V		V_{CCB} = 5V ± 0.5V		UNIT
			MIN	MAX	MIN	MAX	MIN	MAX	MIN	MAX	
	Data rate			52		60		60		60	Mbps
t_w	Pulse duration	Data inputs	19		17		17		17		ns

5.10 Timing Requirements: V_{CCA} = 2.5V ± 0.2V

over recommended operating free-air temperature range, V_{CCA} = 2.5V ± 0.2V (unless otherwise noted)

			V_{CCB} = 2.5V ± 0.2V		V_{CCB} = 3.3V ± 0.3V		V_{CCB} = 5V ± 0.5V		UNIT
			MIN	MAX	MIN	MAX	MIN	MAX	
	Data rate			70		100		100	Mbps
t_w	Pulse duration	Data inputs	14		10		10		ns

5.11 Timing Requirements: V_{CCA} = 3.3V ± 0.3V

over recommended operating free-air temperature range, V_{CCA} = 3.3V ± 0.3V (unless otherwise noted)

			V_{CCB} = 3.3V ± 0.3V		V_{CCB} = 5V ± 0.5V		UNIT
			MIN	MAX	MIN	MAX	
	Data rate			100		100	Mbps
t_w	Pulse duration	Data inputs	10		10		ns

5.12 Switching Characteristics: V_{CCA} = 1.2V (BQB/RSV/DYY)

T_A = 25°C, V_{CCA} = 1.2V

PARAMETER	FROM (INPUT)	TO (OUTPUT)	V_{CCB} = 1.8V	V_{CCB} = 2.5V	V_{CCB} = 3.3V	V_{CCB} = 5V	UNIT
			TYP	TYP	TYP	TYP	
t_{pd}	A	B	9.5	7.9	7.6	8.5	ns
	B	A	9.2	8.8	8.4	8	
t_{en}	OE	A	1	1	1	1	µs
		B	1	1	1	1	
t_{dis}	OE	A	392	392	392	392	ns
		B	392	392	392	392	
t_{rA}, t_{fA}	A-port rise and fall times		4.1	4.4	4.1	3.9	ns
t_{rB}, t_{fB}	B-port rise and fall times		5	5	5.1	5.1	ns
$t_{SK(O)}$	Channel-to-channel skew		2.4	1.7	1.9	7	ns
Max data rate			20	20	20	20	Mbps

Copyright © 2025 Texas Instruments Incorporated

5.13 Switching Characteristics: V_{CCA} = 1.2V (Other Packages)

T_A = 25°C, V_{CCA} = 1.2V

PARAMETER	FROM (INPUT)	TO (OUTPUT)	V_{CCB} = 1.8V	V_{CCB} = 2.5V	V_{CCB} = 3.3V	V_{CCB} = 5V	UNIT
			TYP	TYP	TYP	TYP	
t_{pd}	A	B	9.5	7.9	7.6	8.5	ns
	B	A	9.2	8.8	8.4	8	
t_{en}	OE	A	1	1	1	1	µs
		B	1	1	1	1	
t_{dis}	OE	A	20	17	17	18	ns
		B	20	16	15	15	
t_{rA}, t_{fA}	A-port rise and fall times		4.1	4.4	4.1	3.9	ns
t_{rB}, t_{fB}	B-port rise and fall times		5	5	5.1	5.1	ns
$t_{SK(O)}$	Channel-to-channel skew		2.4	1.7	1.9	7	ns
Max data rate			20	20	20	20	Mbps

5.14 Switching Characteristics: V_{CCA} = 1.5V ± 0.1V (BQB/RSV/DYY)

over recommended operating free-air temperature range, V_{CCA} = 1.5V ± 0.1V (unless otherwise noted)

PARAMETER	FROM (INPUT)	TO (OUTPUT)	V_{CCB} = 1.8V ± 0.15V		V_{CCB} = 2.5V ± 0.2V		V_{CCB} = 3.3V ± 0.3V		V_{CCB} = 5V ± 0.5V		UNIT
			MIN	MAX	MIN	MAX	MIN	MAX	MIN	MAX	
t_{pd}	A	B	1.4	12.9	1.2	10.1	1.1	10	0.8	9.9	ns
	B	A	0.9	14.2	0.7	12	0.4	11.7	0.3	13.7	
t_{en}	OE	A		1		1		1		1	µs
		B		1		1		1		1	
t_{dis}	OE	A	278	390	236	305	236	305	236	305	ns
		B	278	390	236	305	236	305	236	305	
t_{rA}, t_{fA}	A-port rise and fall times		0.8	6.5	0.8	6.3	0.8	6.3	0.8	6.3	ns
t_{rB}, t_{fB}	B-port rise and fall times		1	7.3	0.7	4.9	0.7	4.6	0.6	4.6	ns
$t_{SK(O)}$	Channel-to-channel skew			2.6		1.9		1.6		1.3	ns
Max data rate			50		50		50		50		Mbps

5.15 Switching Characteristics: V_{CCA} = 1.5V ± 0.1V (Other Packages)

over recommended operating free-air temperature range, V_{CCA} = 1.5V ± 0.1V (unless otherwise noted)

PARAMETER	FROM (INPUT)	TO (OUTPUT)	V_{CCB} = 1.8V ± 0.15V		V_{CCB} = 2.5V ± 0.2V		V_{CCB} = 3.3V ± 0.3V		V_{CCB} = 5V ± 0.5V		UNIT
			MIN	MAX	MIN	MAX	MIN	MAX	MIN	MAX	
t_{pd}	A	B	1.4	12.9	1.2	10.1	1.1	10	0.8	9.9	ns
	B	A	0.9	14.2	0.7	12	0.4	11.7	0.3	13.7	
t_{en}	OE	A		1		1		1		1	µs
		B		1		1		1		1	
t_{dis}	OE	A	6.6	33	6.4	25.3	6.1	23.1	5.9	24.6	ns
		B	6.6	35.6	5.8	25.6	5.5	22.1	5.6	20.6	
t_{rA}, t_{fA}	A-port rise and fall times		0.8	6.5	0.8	6.3	0.8	6.3	0.8	6.3	ns
t_{rB}, t_{fB}	B-port rise and fall times		1	7.3	0.7	4.9	0.7	4.6	0.6	4.6	ns
$t_{SK(O)}$	Channel-to-channel skew			2.6		1.9		1.6		1.3	ns
Max data rate			50		50		50		50		Mbps

Copyright © 2025 Texas Instruments Incorporated

5.16 Switching Characteristics: V_{CCA} = 1.8V ± 0.15V (BQB/RSV/DYY)

over recommended operating free-air temperature range, V_{CCA} = 1.8V ± 0.15V (unless otherwise noted)

PARAMETER	FROM (INPUT)	TO (OUTPUT)	V_{CCB} = 1.8V ± 0.15V		V_{CCB} = 2.5V ± 0.2V		V_{CCB} = 3.3V ± 0.3V		V_{CCB} = 5V ± 0.5V		UNIT
			MIN	MAX	MIN	MAX	MIN	MAX	MIN	MAX	
t_{pd}	A	B	1.6	11	1.4	7.7	1.3	6.8	1.2	6.5	ns
	B	A	1.5	12	1.2	8.4	0.8	7.6	0.5	7.1	
t_{en}	OE	A		1		1		1		1	µs
		B		1		1		1		1	
t_{dis}	OE	A	278	389	191	253	190	248	189	248	ns
		B	278	389	191	253	190	248	189	248	
t_{rA}, t_{fA}	A-port rise and fall times		0.7	5.1	0.7	5	1	5	0.7	5	ns
t_{rB}, t_{fB}	B-port rise and fall times		1	7.3	0.7	5	0.7	3.9	0.6	3.8	ns
$t_{SK(O)}$	Channel-to-channel skew			0.8		0.7		0.6		0.6	ns
Max data rate			52		60		60		60		Mbps

5.17 Switching Characteristics: V_{CCA} = 1.8V ± 0.15V (Other Packages)

over recommended operating free-air temperature range, V_{CCA} = 1.8V ± 0.15V (unless otherwise noted)

PARAMETER	FROM (INPUT)	TO (OUTPUT)	V_{CCB} = 1.8V ± 0.15V		V_{CCB} = 2.5V ± 0.2V		V_{CCB} = 3.3V ± 0.3V		V_{CCB} = 5V ± 0.5V		UNIT
			MIN	MAX	MIN	MAX	MIN	MAX	MIN	MAX	
t_{pd}	A	B	1.6	11	1.4	7.7	1.3	6.8	1.2	6.5	ns
	B	A	1.5	12	1.2	8.4	0.8	7.6	0.5	7.1	
t_{en}	OE	A		1		1		1		1	µs
		B		1		1		1		1	
t_{dis}	OE	A	5.9	26.7	5.6	21.6	5.4	18.9	4.8	18.7	ns
		B	6.1	33.9	5.2	23.7	5	19.9	5	17.6	
t_{rA}, t_{fA}	A-port rise and fall times		0.7	5.1	0.7	5	1	5	0.7	5	ns
t_{rB}, t_{fB}	B-port rise and fall times		1	7.3	0.7	5	0.7	3.9	0.6	3.8	ns
$t_{SK(O)}$	Channel-to-channel skew			0.8		0.7		0.6		0.6	ns
Max data rate			52		60		60		60		Mbps

5.18 Switching Characteristics: V_{CCA} = 2.5V ± 0.2V (BQB/RSV/DYY)

over recommended operating free-air temperature range, V_{CCA} = 2.5V ± 0.2V (unless otherwise noted)

PARAMETER	FROM (INPUT)	TO (OUTPUT)	V_{CCB} = 2.5V ± 0.2V		V_{CCB} = 3.3V ± 0.3V		V_{CCB} = 5V ± 0.5V		UNIT
			MIN	MAX	MIN	MAX	MIN	MAX	
t_{pd}	A	B	1.1	6.4	1	5.3	0.9	4.7	ns
	B	A	1	7	0.6	5.6	0.3	4.4	
t_{en}	OE	A		1		1		1	µs
		B		1		1		1	
t_{dis}	OE	A	190	252	137	184	133	169	ns
		B	190	252	137	184	133	169	
t_{rA}, t_{fA}	A-port rise and fall times		0.8	3.6	0.6	3.6	0.5	3.5	ns
t_{rB}, t_{fB}	B-port rise and fall times		0.6	4.9	0.7	3.9	0.6	3.2	ns
$t_{SK(O)}$	Channel-to-channel skew			0.4		0.3		0.3	ns

Copyright © 2025 Texas Instruments Incorporated

over recommended operating free-air temperature range, V_{CCA} = 2.5V ± 0.2V (unless otherwise noted)

PARAMETER	FROM (INPUT)	TO (OUTPUT)	V_{CCB} = 2.5V ± 0.2V		V_{CCB} = 3.3V ± 0.3V		V_{CCB} = 5V ± 0.5V		UNIT
			MIN	MAX	MIN	MAX	MIN	MAX	
Max data rate			70		100		100		Mbps

5.19 Switching Characteristics: V_{CCA} = 2.5V ± 0.2V (Other Packages)

over recommended operating free-air temperature range, V_{CCA} = 2.5V ± 0.2V (unless otherwise noted)

PARAMETER	FROM (INPUT)	TO (OUTPUT)	V_{CCB} = 2.5V ± 0.2V		V_{CCB} = 3.3V ± 0.3V		V_{CCB} = 5V ± 0.5V		UNIT
			MIN	MAX	MIN	MAX	MIN	MAX	
t_{pd}	A	B	1.1	6.4	1	5.3	0.9	4.7	ns
	B	A	1	7	0.6	5.6	0.3	4.4	
t_{en}	OE	A		1		1		1	µs
		B		1		1		1	
t_{dis}	OE	A	5	16.9	4.9	15	4.5	13.8	ns
		B	4.8	21.8	4.5	17.9	4.4	15.2	
t_{rA}, t_{fA}	A-port rise and fall times		0.8	3.6	0.6	3.6	0.5	3.5	ns
t_{rB}, t_{fB}	B-port rise and fall times		0.6	4.9	0.7	3.9	0.6	3.2	ns
$t_{SK(O)}$	Channel-to-channel skew			0.4		0.3		0.3	ns
Max data rate			70		100		100		Mbps

5.20 Switching Characteristics: V_{CCA} = 3.3V ± 0.3V (BQB/RSV/DYY)

over recommended operating free-air temperature range, V_{CCA} = 3.3V ± 0.3V (unless otherwise noted)

PARAMETER	FROM (INPUT)	TO (OUTPUT)	V_{CCB} = 3.3V ± 0.3V		V_{CCB} = 5V ± 0.5V		UNIT
			MIN	MAX	MIN	MAX	
t_{pd}	A	B	0.9	4.9	0.8	4	ns
	B	A	0.5	5.4	0.2	4	
t_{en}	OE	A		1		1	µs
		B		1		1	
t_{dis}	OE	A	137	183	97.6	127	ns
		B	137	183	97.6	127	
t_{rA}, t_{fA}	A-port rise and fall times		0.5	3	0.5	3	ns
t_{rB}, t_{fB}	B-port rise and fall times		0.7	3.9	0.6	3.2	ns
$t_{SK(O)}$	Channel-to-channel skew			0.4		0.3	ns
Max data rate			100		100		Mbps

Copyright © 2025 Texas Instruments Incorporated

5.21 Switching Characteristics: V_{CCA} = 3.3V ± 0.3V (Other Packages)

over recommended operating free-air temperature range, V_{CCA} = 3.3V ± 0.3V (unless otherwise noted)

PARAMETER	FROM (INPUT)	TO (OUTPUT)	V_{CCB} = 3.3V ± 0.3V		V_{CCB} = 5V ± 0.5V		UNIT
			MIN	MAX	MIN	MAX	
t_{pd}	A	B	0.9	4.9	0.8	4	ns
	B	A	0.5	5.4	0.2	4	
t_{en}	OE	A		1		1	µs
		B		1		1	
t_{dis}	OE	A	4.5	13.9	4.1	12.4	ns
		B	4.1	17.3	4	14.4	
t_{rA}, t_{fA}	A-port rise and fall times		0.5	3	0.5	3	ns
t_{rB}, t_{fB}	B-port rise and fall times		0.7	3.9	0.6	3.2	ns
$t_{SK(O)}$	Channel-to-channel skew			0.4		0.3	ns
Max data rate			100		100		Mbps

5.22 Operating Characteristics

T_A = 25°C

PARAMETER		TEST CONDITIONS	V_{CCA}							UNIT
			1.2V	1.2V	1.5V	1.8V	2.5V	2.5V	3.3V	
			V_{CCB}							
			5V	1.8V	1.8V	1.8V	2.5V	5V	3.3V to 5V	
			TYP	TYP	TYP	TYP	TYP	TYP	TYP	
C_{pdA}	A-port input, B-port output	C_L = 0, f = 10MHz, t_r = t_f = 1ns, OE = V_{CCA} (outputs enabled)	9	8	7	7	7	7	8	pF
	B-port input, A-port output		12	11	11	11	11	11	11	
C_{pdB}	A-port input, B-port output		35	26	27	27	27	27	28	
	B-port input, A-port output		26	19	18	18	18	20	21	
C_{pdA}	A-port input, B-port output	C_L = 0, f = 10MHz, t_r = t_f = 1ns, OE = GND (outputs disabled)	0.01	0.01	0.01	0.01	0.01	0.01	0.01	pF
	B-port input, A-port output		0.01	0.01	0.01	0.01	0.01	0.01	0.01	
C_{pdB}	A-port input, B-port output		0.01	0.01	0.01	0.01	0.01	0.01	0.03	
	B-port input, A-port output		0.01	0.01	0.01	0.01	0.01	0.01	0.03	

Copyright © 2025 Texas Instruments Incorporated

5.23 Typical Characteristics

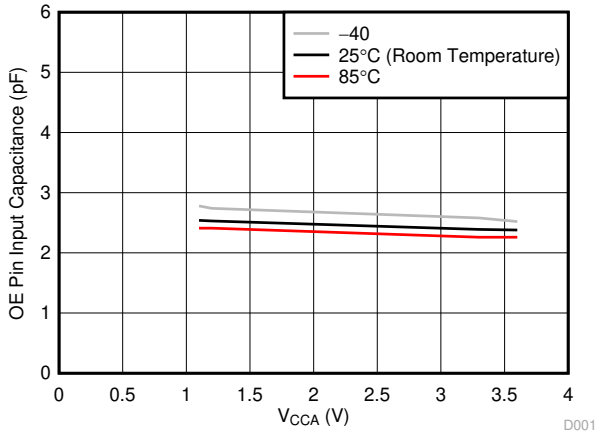

V_{CCB}= 3.3V

Figure 5-1. Input capacitance for OE pin (C_I) vs Power Supply (V_{CCA})

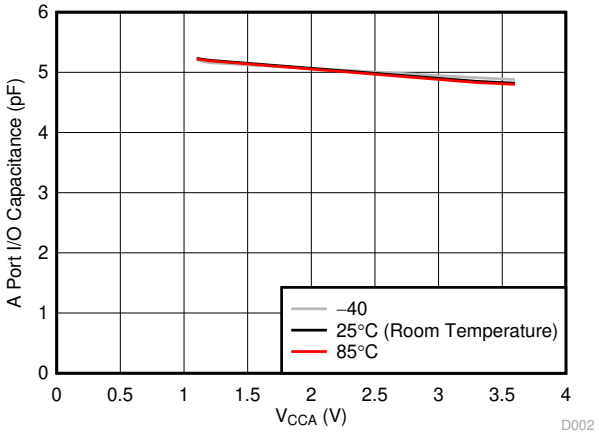

V_{CCB}= 3.3V

Figure 5-2. Capacitance for A port I/O pins (C_{iO}) vs Power Supply (V_{CCA})

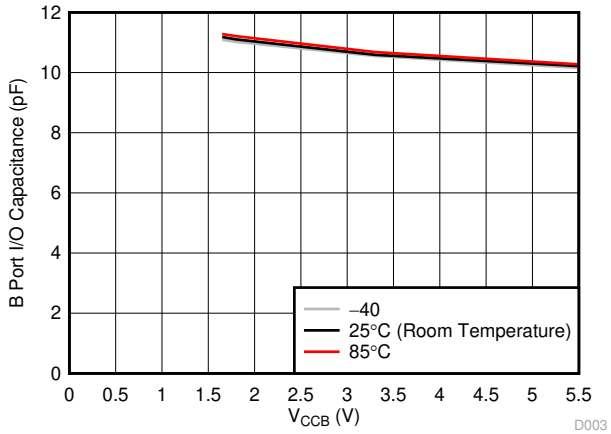

V_{CCA}= 1.8V

Figure 5-3. Capacitance for B port I/O pins (C_{iO}) vs Power Supply (V_{CCB})

6 Parameter Measurement Information

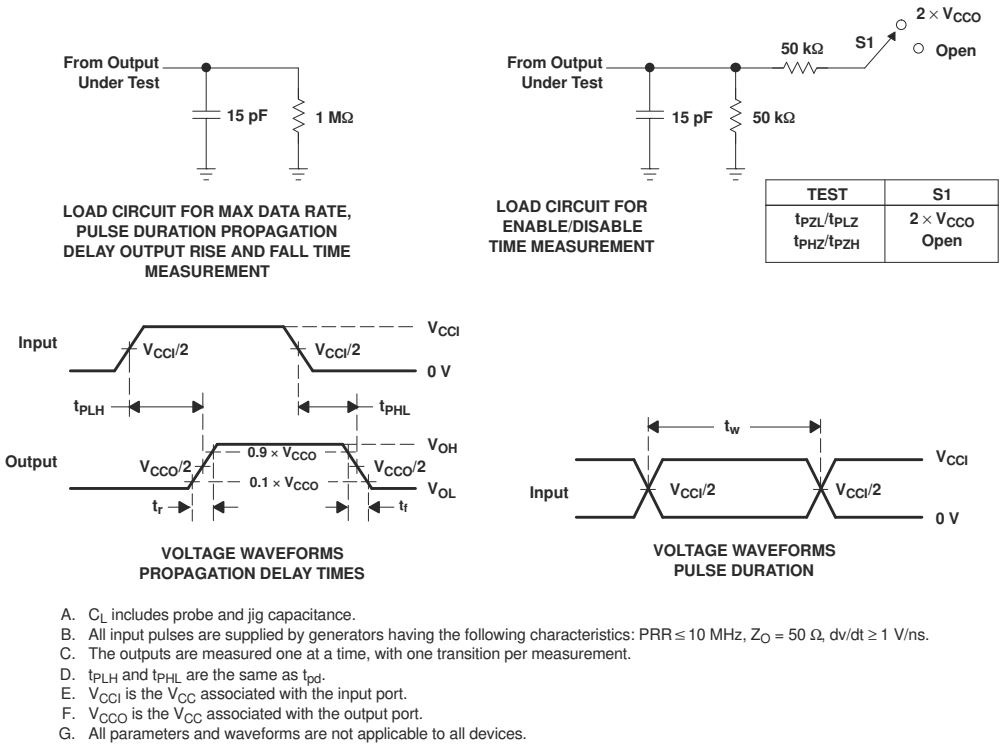

A. C_L includes probe and jig capacitance.
B. All input pulses are supplied by generators having the following characteristics: PRR ≤ 10 MHz, Z_O = 50 Ω, dv/dt ≥ 1 V/ns.
C. The outputs are measured one at a time, with one transition per measurement.
D. t_{PLH} and t_{PHL} are the same as t_{pd}.
E. V_{CCI} is the V_{CC} associated with the input port.
F. V_{CCO} is the V_{CC} associated with the output port.
G. All parameters and waveforms are not applicable to all devices.

Figure 6-1. Load Circuits and Voltage Waveforms

7 Detailed Description

7.1 Overview

The TXB0106 device is a 6-bit, directionless voltage-level translator specifically designed for translating logic voltage levels. The A port is able to accept I/O voltages ranging from 1.2V to 3.6V, while the B port can accept I/O voltages from 1.65V to 5.5V. The device is a buffered architecture with edge-rate accelerators (one-shots) to improve the overall data rate. This device can only translate push-pull CMOS logic outputs. If for open-drain signal translation, please refer to TI's TXS010X products.

Copyright © 2025 Texas Instruments Incorporated

7.2 Functional Block Diagram

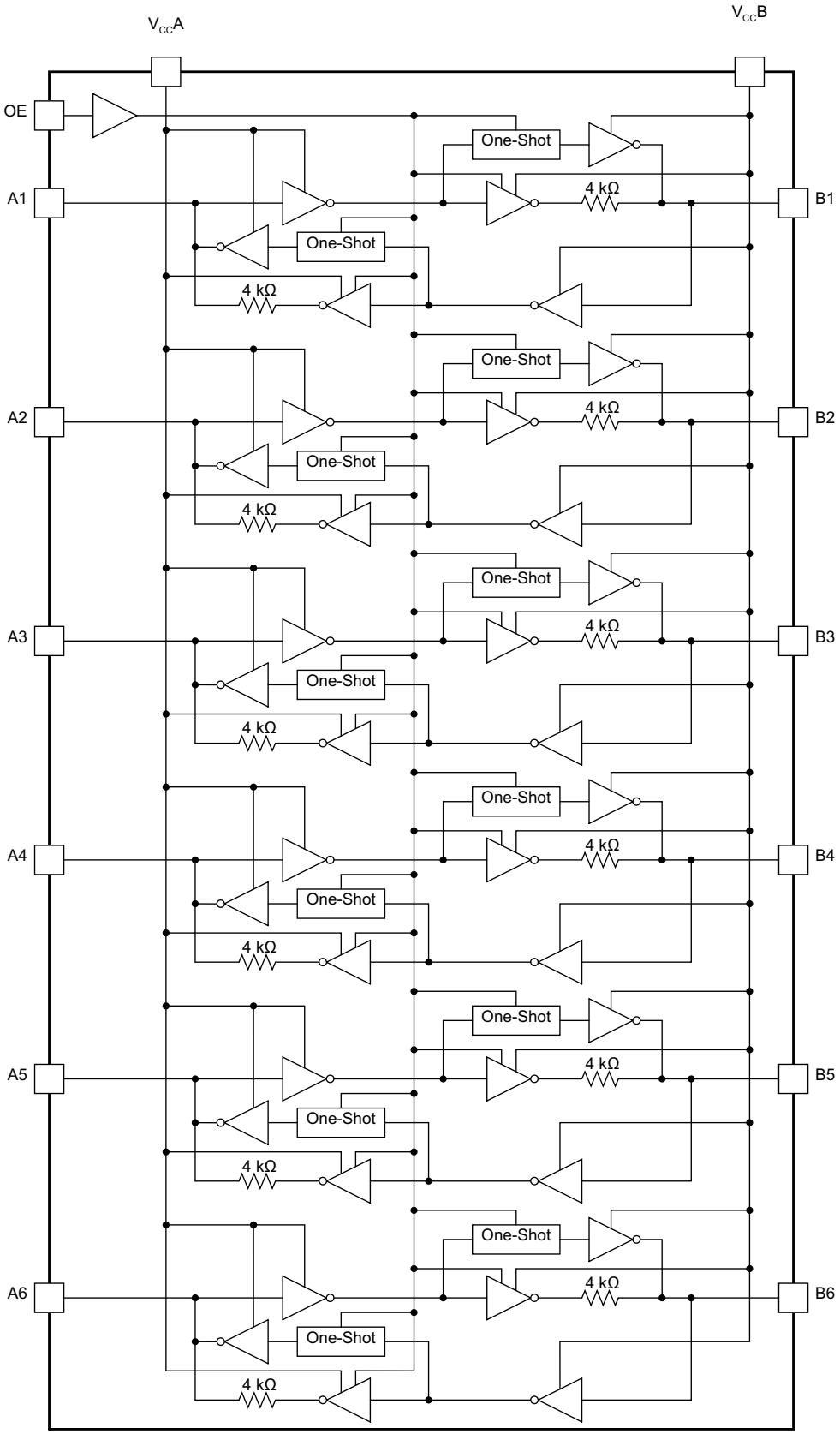

7.3 Feature Description

7.3.1 Architecture

The TXB0106 architecture (see Figure 7-1) does not require a direction-control signal to control the direction of data flow from A to B or from B to A. In a DC state, the output drivers of the TXB0106 maintain a high or low and are designed to be weak, so that an external driver can overdrive the output drivers when data on the bus starts flowing the opposite direction.

The output one-shots detect rising or falling edges on the A or B ports. During a rising edge, the one-shot turns on the PMOS transistors (T1, T3) for a short duration, which speeds up the low-to-high transition. Similarly, during a falling edge, the one-shot turns on the NMOS transistors (T2, T4) for a short duration, which speeds up the high-to-low transition. The typical output impedance during output transition is 70Ω at V_{CCO} = 1.2V to 1.8V, 50Ω at V_{CCO} = 1.8V to 3.3V, and 40Ω at V_{CCO} = 3.3V to 5V.

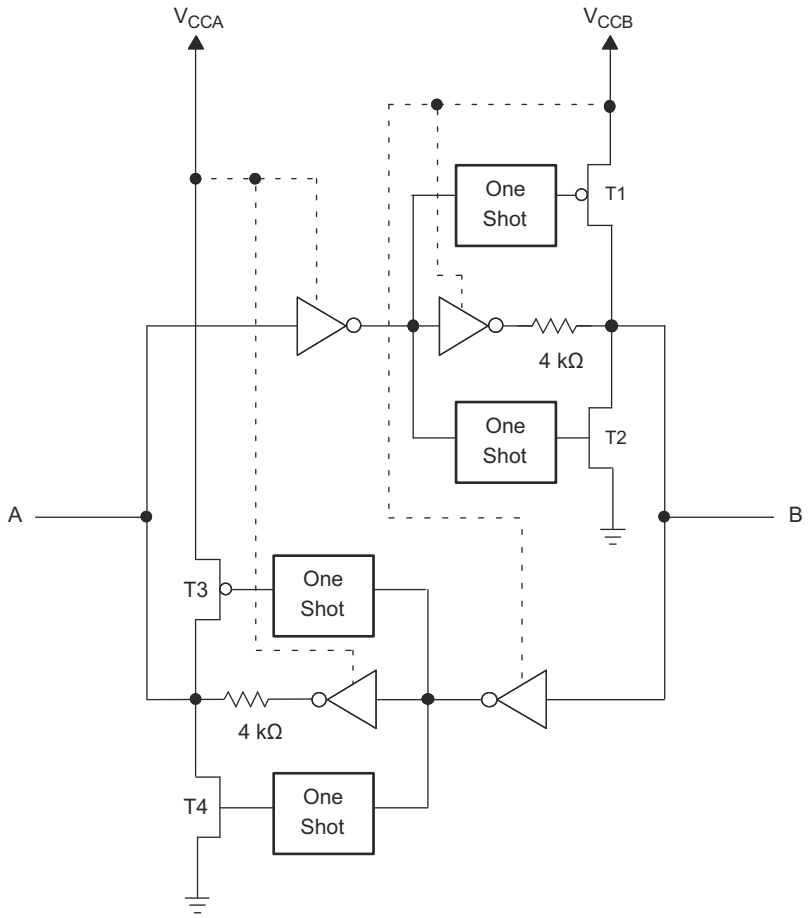

Figure 7-1. Architecture of TXB0106 I/O Cell

7.3.2 Input Driver Requirements

Typical I_{IN} vs V_{IN} characteristics of the TXB0106 are shown in Figure 7-2. For proper operation, the device driving the data I/Os of the TXB0106 must have drive strength of at least ±2mA.

Copyright © 2025 Texas Instruments Incorporated

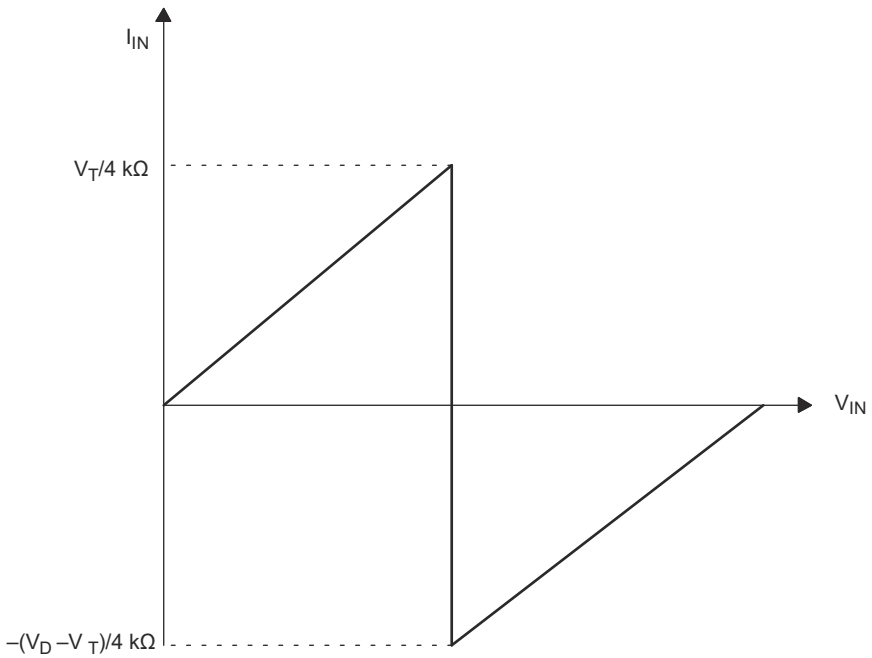

A. V_T is the input threshold voltage of the TXB0106 (typically $V_{CCI}/2$).
B. V_D is the supply voltage of the external driver.

Figure 7-2. Typical I_{IN} vs V_{IN} Curve

7.3.3 Power Up

During operation, ensure that $V_{CCA} \leq V_{CCB}$ at all times. During power-up sequencing, $V_{CCA} \geq V_{CCB}$ does not damage the device, so any power supply can be ramped up first. The TXB0106 has circuitry that disables all output ports when either V_{CC} is switched off ($V_{CCA/B}$ = 0V).

7.3.4 Output Load Considerations

TI recommends careful PCB layout practices with short PCB trace lengths to avoid excessive capacitive loading and to establish that proper O.S. triggering takes place. Keep PCB signal trace-lengths short enough so that the round trip delay of any reflection is less than the one-shot duration. This improves signal integrity by ensuring that any reflection sees a low impedance at the driver. The O.S. circuits are designed to stay on for approximately 10ns. The maximum capacitance of the lumped load that can be driven also depends directly on the one-shot duration. With very heavy capacitive loads, the one-shot can time-out before the signal is driven fully to the positive rail. The O.S. duration has been set to best optimize trade-offs between dynamic ICC, load driving capability, and maximum bit-rate considerations. Both PCB trace length and connectors add to the capacitance that the TXB0106 output undergoes, so it is recommended that this lumped-load capacitance be considered to avoid O.S. retriggering, bus contention, output signal oscillations, or other adverse system-level affects.

7.3.5 Enable and Disable

The TXB0106 has an OE input that is used to disable the device by setting OE = low, which places all I/Os in the high-impedance (Hi-Z) state. The disable time (t_{dis}) indicates the delay between when OE goes low and when the outputs actually get disabled (Hi-Z). The enable time (t_{en}) indicates the amount of time the user must allow for the one-shot circuitry to become operational after OE is taken high.

7.3.6 Pullup or Pulldown Resistors on I/O Lines

The TXB0106 is designed to drive capacitive loads of up to 70pF. The output drivers of the TXB0106 have low dc drive strength. If pullup or pulldown resistors are connected externally to the data I/Os, keep values higher than 50kΩ to establish that they do not contend with the output drivers of the TXB0106.

Copyright © 2025 Texas Instruments Incorporated

For the same reason, do not use the TXB0106 in applications such as I^2C or 1-Wire where an open-drain driver is connected on the bidirectional data I/O. For these applications, use a device from the TI TXS01xx series of level translators.

7.4 Device Functional Modes

The TXB0106 device has two functional modes, enabled and disabled. To disable the device, set the OE input to low, which places all I/Os in a high impedance state. Setting the OE input to high will enable the device.

Copyright © 2025 Texas Instruments Incorporated

8 Application and Implementation

Note

Information in the following applications sections is not part of the TI component specification, and TI does not warrant its accuracy or completeness. TI's customers are responsible for determining suitability of components for their purposes. Customers should validate and test their design implementation to confirm system functionality.

8.1 Application Information

The TXB0106 can be used in level-translation applications for interfacing devices or systems operating at different interface voltages with one another. The TXB0106 can only translate push-pull CMOS logic outputs. If for open-drain signal translation, refer to TI TXS010X products. Any external pulldown or pullup resistors are recommended larger than 50kΩ.

8.2 Typical Application

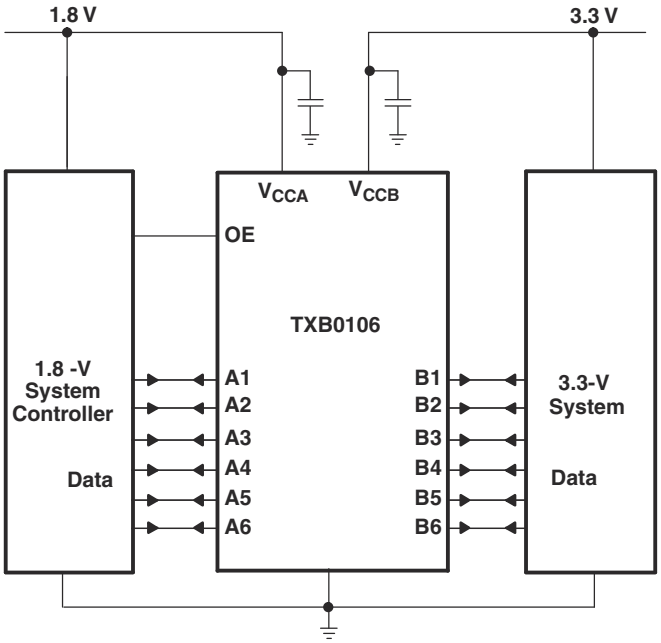

Figure 8-1. Typical Operating Circuit

8.2.1 Design Requirements

For this design example, use the parameters listed in Table 8-1. Check that $V_{CCA} \leq V_{CCB}$.

Table 8-1. Design Parameters

DESIGN PARAMETERS	EXAMPLE VALUE
Input voltage range	1.2V to 3.6V
Output voltage range	1.65V to 5.5V

8.2.2 Detailed Design Procedure

To begin the design process, determine the following:

- Input voltage range
  - Use the supply voltage of the device that is driving the TXB0106 device to determine the input voltage range. For a valid logic high the value must exceed the V_{IH} of the input port. For a valid logic low the value must be less than the V_{IL} of the input port.
- Output voltage range
  - Use the supply voltage of the device that the TXB0106 device is driving to determine the output voltage range.
  - External pullop and pulldown resistors are not recommended. If the pullup and pulldown resistors are mandatory, the value must not be larger than 50kΩ.
- An external pulldown or pullup resistor decreases the output V_{OH} and V_{OL}. Use the below equations to draft estimate the V_{OH} and V_{OL} as a result of an external pulldown and pullup resistor.

$$V_{OH} = V_{CCx} \times R_{PD} \div (R_{PD} + 4.5k\Omega) \quad (1)$$

$$V_{OH} = V_{CCx} \times 4.5k\Omega \div (R_{PU} + 4.5k\Omega) \quad (2)$$

where

- V_{CCx} is the output port supply voltage on either V_{CCA} or V_{CCB}
- R_{PD} is the value of the external pull down resistor
- R_{PU} is the value of the external pull up resistor
- 4.5kΩ is the counting the variation of the serial resistor 4kΩ in the I/O line

Copyright © 2025 Texas Instruments Incorporated

8.2.3 Application Curves

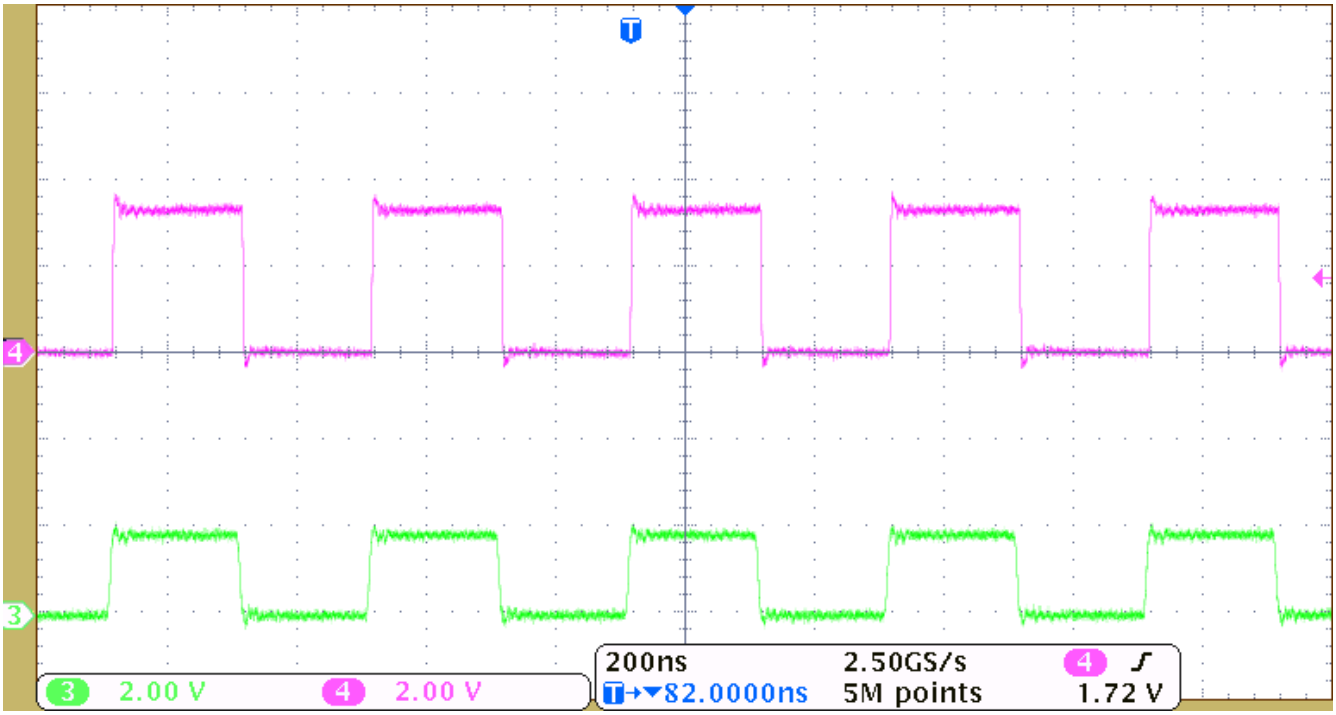

Figure 8-2. 2.5MHz Signal Level Translation

8.3 Power Supply Recommendations

During operation, ensure that $V_{CCA} \leq V_{CCB}$ at all times. During power-up sequencing, $V_{CCA} \geq V_{CCB}$ does not damage the device, so any power supply can be ramped up first. The TXB0106 has circuitry that disables all output ports when either V_{CC} is switched off ($V_{CCA/B}$ = 0V). The output-enable (OE) input circuit is designed so that it is supplied by V_{CCA} and when the (OE) input is low, all outputs are placed in the high-impedance state. To verify that the high-impedance state of the outputs during power up or power down, the OE input pin must be tied to GND through a pulldown resistor and must not be enabled until V_{CCA} and V_{CCB} are fully ramped and stable. The minimum value of the pulldown resistor to ground is determined by the current-sourcing capability of the driver.

8.4 Layout

8.4.1 Layout Guidelines

To confirm reliability of the device, following common printed-circuit board layout guidelines is recommended.

- Use bypass capacitors on power supplies. Place bypass capacitors as close as possible to the V_{CCA}, V_{CCB} pin, and GND pin.
- Use short trace-lengths to avoid excessive loading.
- Keep PCB signal trace-lengths short enough so that the round-trip delay of any reflection is less than the one-shot duration, approximately 10ns, establishing that any reflection encounters low impedance at the source driver.

Copyright © 2025 Texas Instruments Incorporated

8.4.2 Layout Example

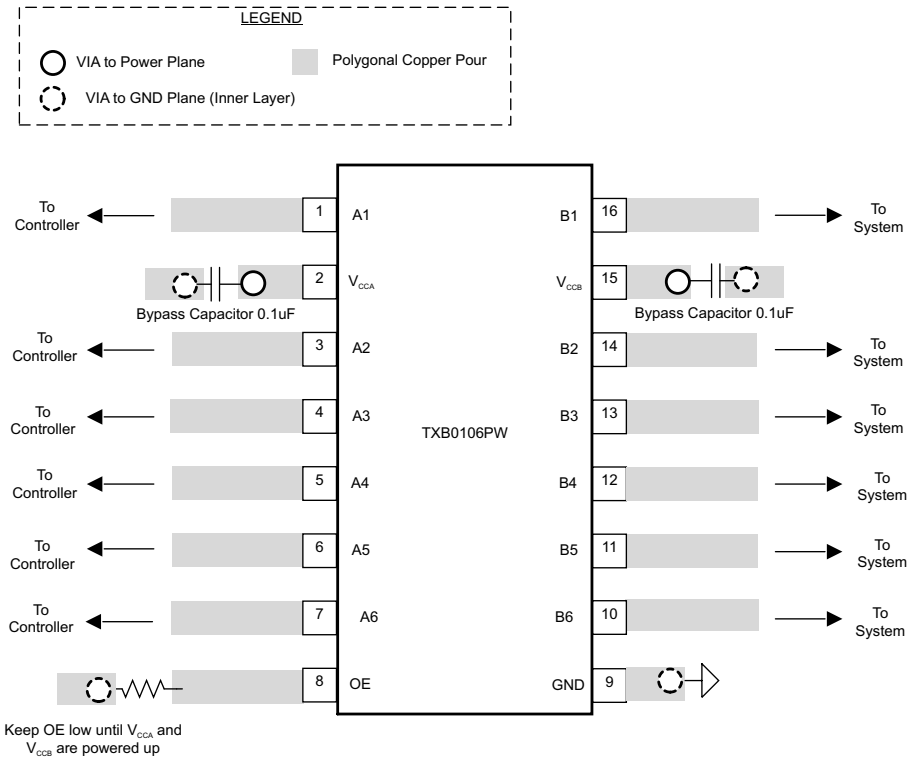

Copyright © 2025 Texas Instruments Incorporated

9 Device and Documentation Support

9.1 Documentation Support

9.1.1 Related Documentation

Texas Instruments, *A Guide to Voltage Translation With TXB-Type Translators* application report

Texas Instruments, *Semiconductor and IC Package Thermal Metrics* application note

9.2 Receiving Notification of Documentation Updates

To receive notification of documentation updates, navigate to the device product folder on ti.com. Click on *Notifications* to register and receive a weekly digest of any product information that has changed. For change details, review the revision history included in any revised document.

9.3 Support Resources

TI E2E™ support forums are an engineer's go-to source for fast, verified answers and design help — straight from the experts. Search existing answers or ask your own question to get the quick design help you need.

Linked content is provided "AS IS" by the respective contributors. They do not constitute TI specifications and do not necessarily reflect TI's views; see TI's Terms of Use.

9.4 Trademarks

TI E2E™ is a trademark of Texas Instruments.
All trademarks are the property of their respective owners.

9.5 Electrostatic Discharge Caution



This integrated circuit can be damaged by ESD. Texas Instruments recommends that all integrated circuits be handled with appropriate precautions. Failure to observe proper handling and installation procedures can cause damage.

ESD damage can range from subtle performance degradation to complete device failure. Precision integrated circuits may be more susceptible to damage because very small parametric changes could cause the device not to meet its published specifications.

9.6 Glossary

TI Glossary	This glossary lists and explains terms, acronyms, and definitions.

10 Revision History

NOTE: Page numbers for previous revisions may differ from page numbers in the current version.

Changes from Revision B (February 2015) to Revision C (May 2025)	Page
• Updated the numbering format for tables, figures, and cross-references throughout the document	1
• Added thermal information for BQB, RSV and DYY packages	6
• Added *Related Documentation* section	23

Changes from Revision A (April 2012) to Revision B (February 2015)	Page
• Added *Pin Configuration and Functions* section, *ESD Ratings* table, *Feature Description* section, *Device Functional Modes*, *Application and Implementation* section, *Power Supply Recommendations* section, *Layout* section, *Device and Documentation Support* section, and *Mechanical, Packaging, and Orderable Information* section	1

Changes from Revision * (September 2008) to Revision A (April 2012)	Page
• Added notes to pin out graphics	3

Copyright © 2025 Texas Instruments Incorporated

11 Mechanical, Packaging, and Orderable Information

The following pages include mechanical, packaging, and orderable information. This information is the most current data available for the designated devices. This data is subject to change without notice and revision of this document. For browser-based versions of this data sheet, refer to the left-hand navigation.

Copyright © 2025 Texas Instruments Incorporated

PACKAGING INFORMATION

Orderable part number	Status (1)	Material type (2)	Package | Pins	Package qty | Carrier	RoHS (3)	Lead finish/ Ball material (4)	MSL rating/ Peak reflow (5)	Op temp (°C)	Part marking (6)
TXB0106BQBR	Active	Production	WQFN (BQB) | 16	3000 | LARGE T&R	Yes	NIPDAU	Level-2-260C-1 YEAR	-40 to 85	YE06
TXB0106DYYR	Active	Production	SOT-23-THIN (DYY) | 16	3000 | LARGE T&R	Yes	NIPDAU	Level-1-260C-UNLIM	-40 to 85	TXB0106
TXB0106PWR	Active	Production	TSSOP (PW) | 16	2000 | LARGE T&R	Yes	NIPDAU	Level-1-260C-UNLIM	-40 to 85	YE06
TXB0106PWR.A	Active	Production	TSSOP (PW) | 16	2000 | LARGE T&R	Yes	NIPDAU	Level-1-260C-UNLIM	-40 to 85	YE06
TXB0106PWR.B	Active	Production	TSSOP (PW) | 16	2000 | LARGE T&R	Yes	NIPDAU	Level-1-260C-UNLIM	-40 to 85	YE06
TXB0106PWRG4	Active	Production	TSSOP (PW) | 16	2000 | LARGE T&R	Yes	NIPDAU	Level-1-260C-UNLIM	-40 to 85	YE06
TXB0106PWRG4.A	Active	Production	TSSOP (PW) | 16	2000 | LARGE T&R	Yes	NIPDAU	Level-1-260C-UNLIM	-40 to 85	YE06
TXB0106PWRG4.B	Active	Production	TSSOP (PW) | 16	2000 | LARGE T&R	Yes	NIPDAU	Level-1-260C-UNLIM	-40 to 85	YE06
TXB0106RGYR	Active	Production	VQFN (RGY) | 16	3000 | LARGE T&R	Yes	NIPDAU	Level-2-260C-1 YEAR	-40 to 85	YE06
TXB0106RGYR.A	Active	Production	VQFN (RGY) | 16	3000 | LARGE T&R	Yes	NIPDAU	Level-2-260C-1 YEAR	-40 to 85	YE06
TXB0106RGYR.B	Active	Production	VQFN (RGY) | 16	3000 | LARGE T&R	Yes	NIPDAU	Level-2-260C-1 YEAR	-40 to 85	YE06
TXB0106RGYRG4	Active	Production	VQFN (RGY) | 16	3000 | LARGE T&R	Yes	NIPDAU	Level-2-260C-1 YEAR	-40 to 85	YE06
TXB0106RGYRG4.A	Active	Production	VQFN (RGY) | 16	3000 | LARGE T&R	Yes	NIPDAU	Level-2-260C-1 YEAR	-40 to 85	YE06
TXB0106RGYRG4.B	Active	Production	VQFN (RGY) | 16	3000 | LARGE T&R	Yes	NIPDAU	Level-2-260C-1 YEAR	-40 to 85	YE06

(1) **Status:** For more details on status, see our product life cycle.

(2) **Material type:** When designated, preproduction parts are prototypes/experimental devices, and are not yet approved or released for full production. Testing and final process, including without limitation quality assurance, reliability performance testing, and/or process qualification, may not yet be complete, and this item is subject to further changes or possible discontinuation. If available for ordering, purchases will be subject to an additional waiver at checkout, and are intended for early internal evaluation purposes only. These items are sold without warranties of any kind.

(3) **RoHS values:** Yes, No, RoHS Exempt. See the TI RoHS Statement for additional information and value definition.

(4) **Lead finish/Ball material:** Parts may have multiple material finish options. Finish options are separated by a vertical ruled line. Lead finish/Ball material values may wrap to two lines if the finish value exceeds the maximum column width.

(5) **MSL rating/Peak reflow:** The moisture sensitivity level ratings and peak solder (reflow) temperatures. In the event that a part has multiple moisture sensitivity ratings, only the lowest level per JEDEC standards is shown. Refer to the shipping label for the actual reflow temperature that will be used to mount the part to the printed circuit board.

(6) **Part marking:** There may be an additional marking, which relates to the logo, the lot trace code information, or the environmental category of the part.

Multiple part markings will be inside parentheses. Only one part marking contained in parentheses and separated by a "~" will appear on a part. If a line is indented then it is a continuation of the previous line and the two combined represent the entire part marking for that device.

Important Information and Disclaimer: The information provided on this page represents TI's knowledge and belief as of the date that it is provided. TI bases its knowledge and belief on information provided by third parties, and makes no representation or warranty as to the accuracy of such information. Efforts are underway to better integrate information from third parties. TI has taken and continues to take reasonable steps to provide representative and accurate information but may not have conducted destructive testing or chemical analysis on incoming materials and chemicals. TI and TI suppliers consider certain information to be proprietary, and thus CAS numbers and other limited information may not be available for release.

In no event shall TI's liability arising out of such information exceed the total purchase price of the TI part(s) at issue in this document sold by TI to Customer on an annual basis.

OTHER QUALIFIED VERSIONS OF TXB0106 :

- Automotive : TXB0106-Q1

NOTE: Qualified Version Definitions:

- Automotive - Q100 devices qualified for high-reliability automotive applications targeting zero defects

TAPE AND REEL INFORMATION

REEL DIMENSIONS

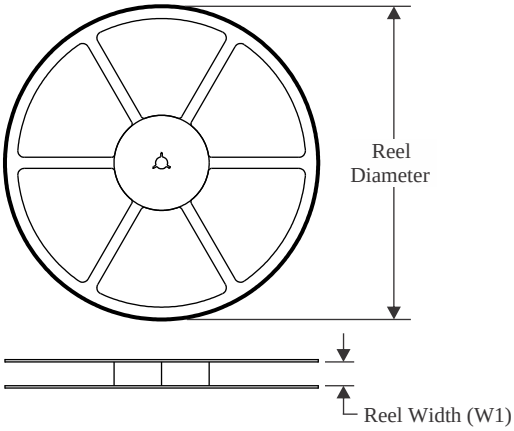

TAPE DIMENSIONS

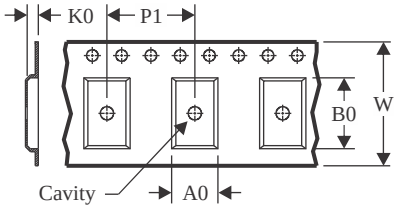

A0	Dimension designed to accommodate the component width
B0	Dimension designed to accommodate the component length
K0	Dimension designed to accommodate the component thickness
W	Overall width of the carrier tape
P1	Pitch between successive cavity centers

QUADRANT ASSIGNMENTS FOR PIN 1 ORIENTATION IN TAPE

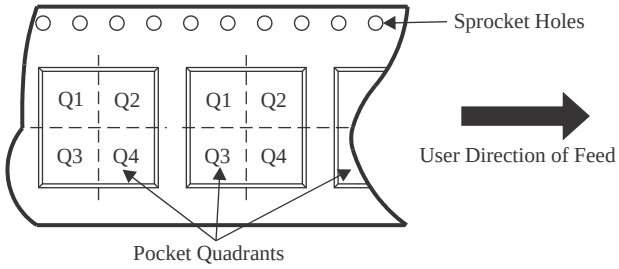

*All dimensions are nominal

Device	Package Type	Package Drawing	Pins	SPQ	Reel Diameter (mm)	Reel Width W1 (mm)	A0 (mm)	B0 (mm)	K0 (mm)	P1 (mm)	W (mm)	Pin1 Quadrant
TXB0106BQBR	WQFN	BQB	16	3000	177.8	12.4	2.8	3.8	1.2	4.0	12.0	Q1
TXB0106DYYR	SOT-23-THIN	DYY	16	3000	330.0	12.4	4.8	3.6	1.6	8.0	12.0	Q3
TXB0106PWR	TSSOP	PW	16	2000	330.0	12.4	6.9	5.6	1.6	8.0	12.0	Q1
TXB0106PWRG4	TSSOP	PW	16	2000	330.0	12.4	6.9	5.6	1.6	8.0	12.0	Q1
TXB0106RGYR	VQFN	RGY	16	3000	330.0	12.4	3.8	4.3	1.5	8.0	12.0	Q1
TXB0106RGYRG4	VQFN	RGY	16	3000	330.0	12.4	3.8	4.3	1.5	8.0	12.0	Q1

TAPE AND REEL BOX DIMENSIONS

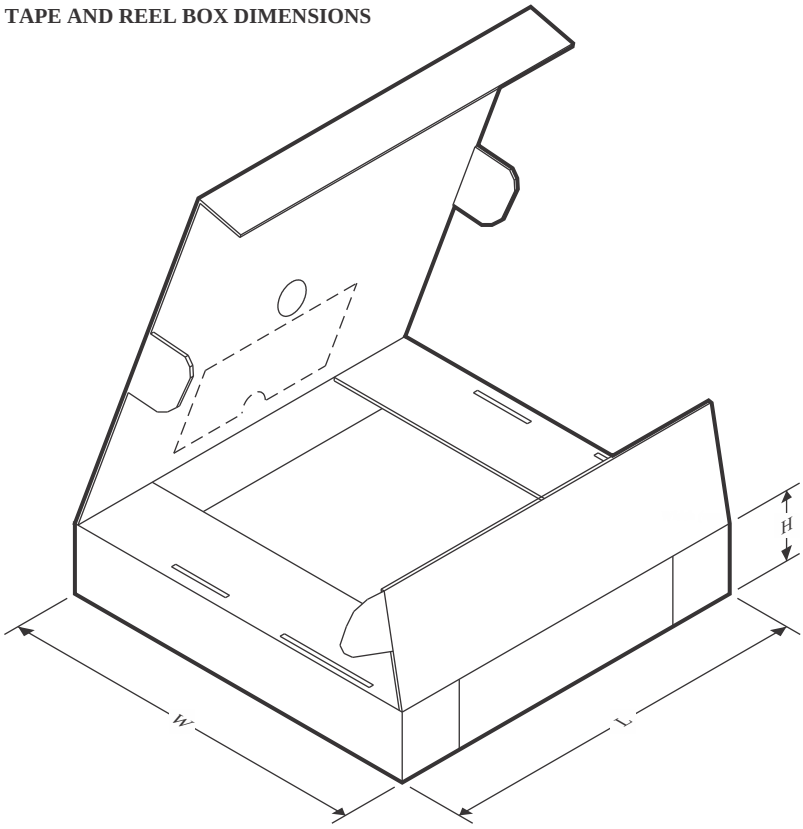

*All dimensions are nominal

Device	Package Type	Package Drawing	Pins	SPQ	Length (mm)	Width (mm)	Height (mm)
TXB0106BQBR	WQFN	BQB	16	3000	208.0	191.0	35.0
TXB0106DYYR	SOT-23-THIN	DYY	16	3000	336.6	336.6	31.8
TXB0106PWR	TSSOP	PW	16	2000	353.0	353.0	32.0
TXB0106PWRG4	TSSOP	PW	16	2000	353.0	353.0	32.0
TXB0106RGYR	VQFN	RGY	16	3000	353.0	353.0	32.0
TXB0106RGYRG4	VQFN	RGY	16	3000	353.0	353.0	32.0

GENERIC PACKAGE VIEW

BQB 16

WQFN - 0.8 mm max height

2.5 x 3.5, 0.5 mm pitch

PLASTIC QUAD FLATPACK - NO LEAD

This image is a representation of the package family, actual package may vary.
Refer to the product data sheet for package details.

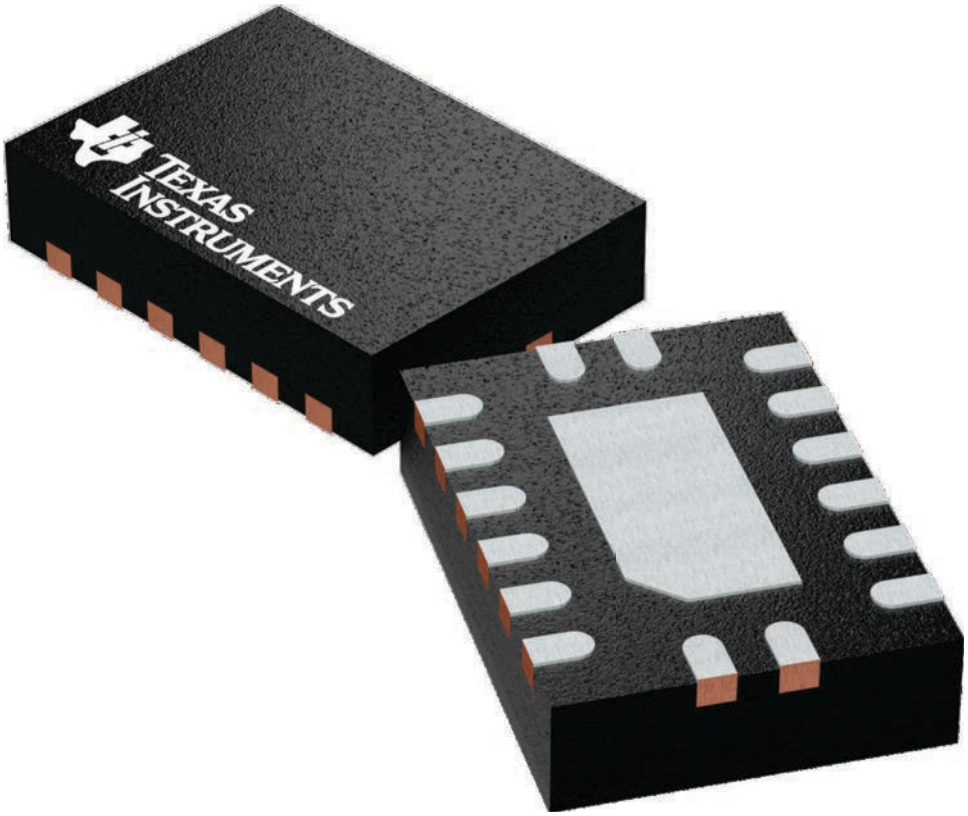

4226161/A

PACKAGE OUTLINE

BQB0016A

WQFN - 0.8 mm max height

PLASTIC QUAD FLAT PACK-NO LEAD

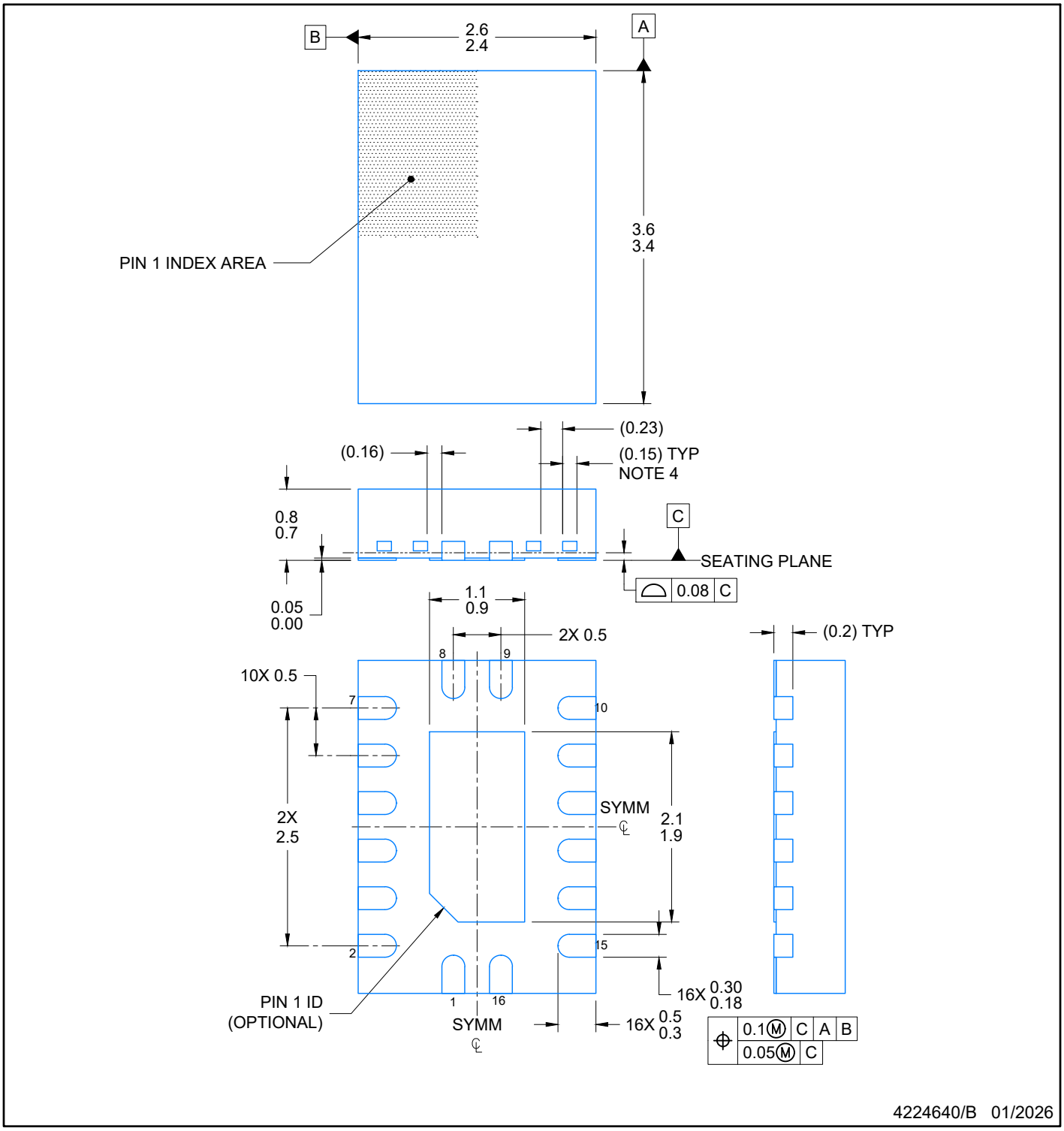

NOTES:

1. All linear dimensions are in millimeters. Any dimensions in parenthesis are for reference only. Dimensioning and tolerancing per ASME Y14.5M.
2. This drawing is subject to change without notice.
3. The package thermal pad must be soldered to the printed circuit board for optimal thermal and mechanical performance.
4. Features may differ or may not be present

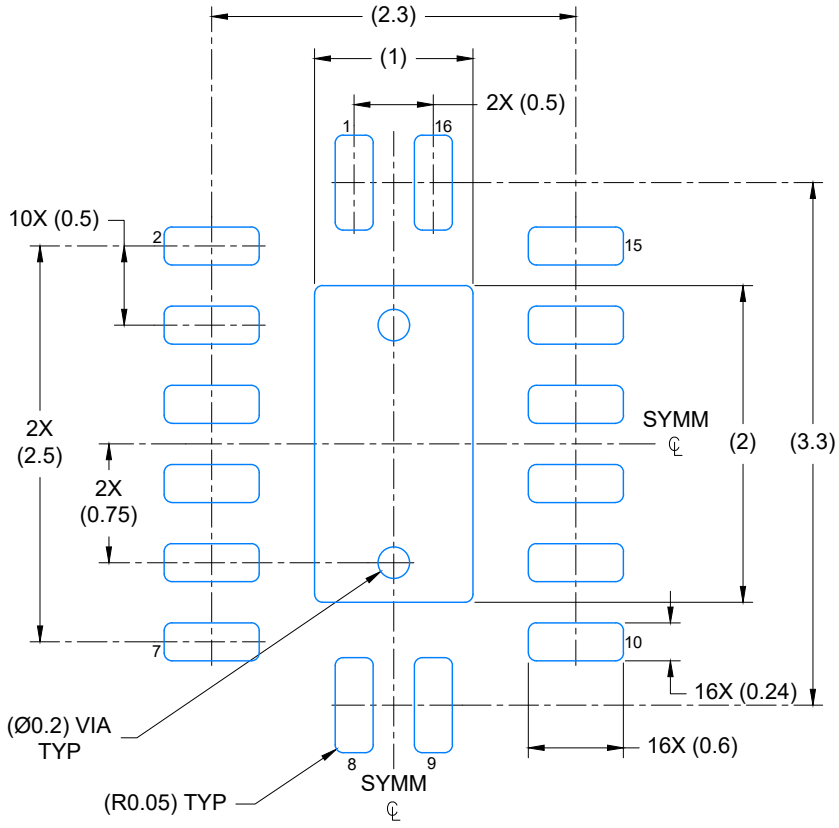

LAND PATTERN EXAMPLE
EXPOSED METAL SHOWN
SCALE: 20X

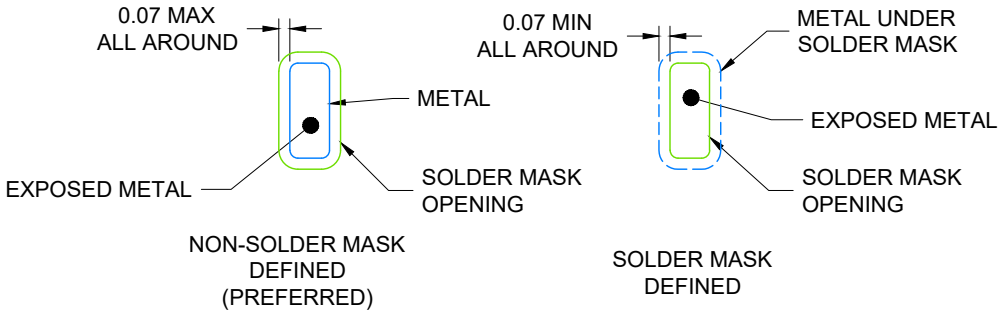

4224640/B 01/2026

1. NOTES: (continued)

5. This package is designed to be soldered to a thermal pad on the board. For more information, see Texas Instruments literature number SLUA271 (www.ti.com/lit/slua271).

6. Vias are optional depending on application, refer to device data sheet. If any vias are implemented, refer to their locations shown on this view. It is recommended that vias under paste be filled, plugged or tented.

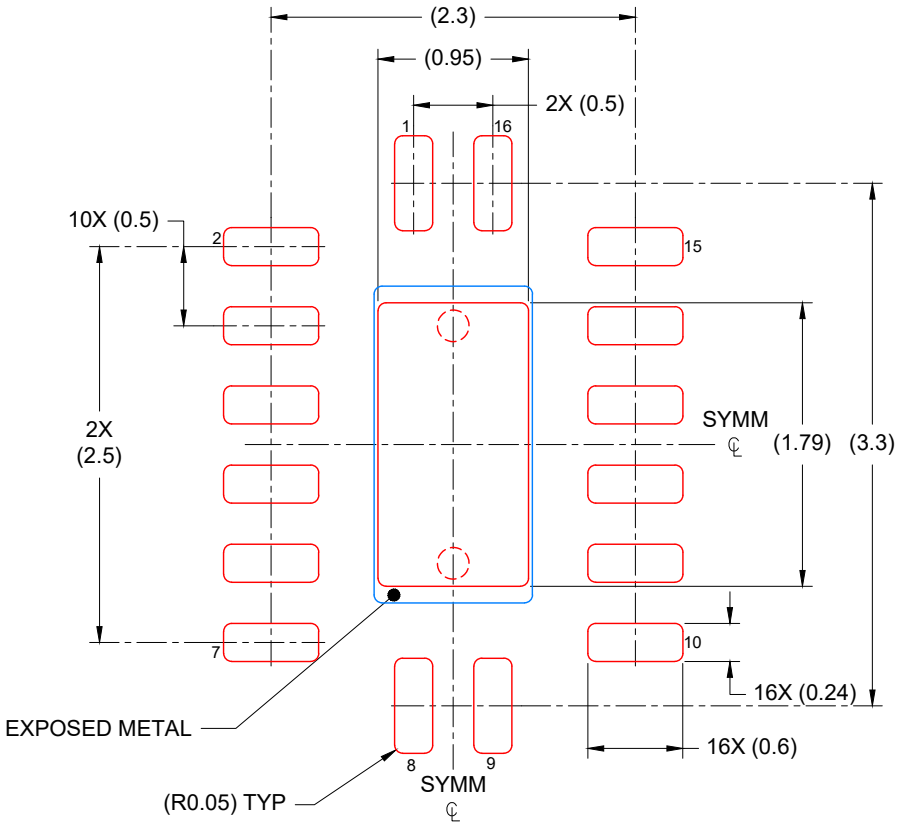

SOLDER PASTE EXAMPLE
BASED ON 0.125 mm THICK STENCIL

EXPOSED PAD
85% PRINTED COVERAGE BY AREA
SCALE: 20X

4224640/B 01/2026

NOTES: (continued)

7. Laser cutting apertures with trapezoidal walls and rounded corners may offer better paste release. IPC-7525 may have alternate design recommendations.

PACKAGE OUTLINE

DYY0016A

SOT-23-THIN - 1.1 mm max height

PLASTIC SMALL OUTLINE

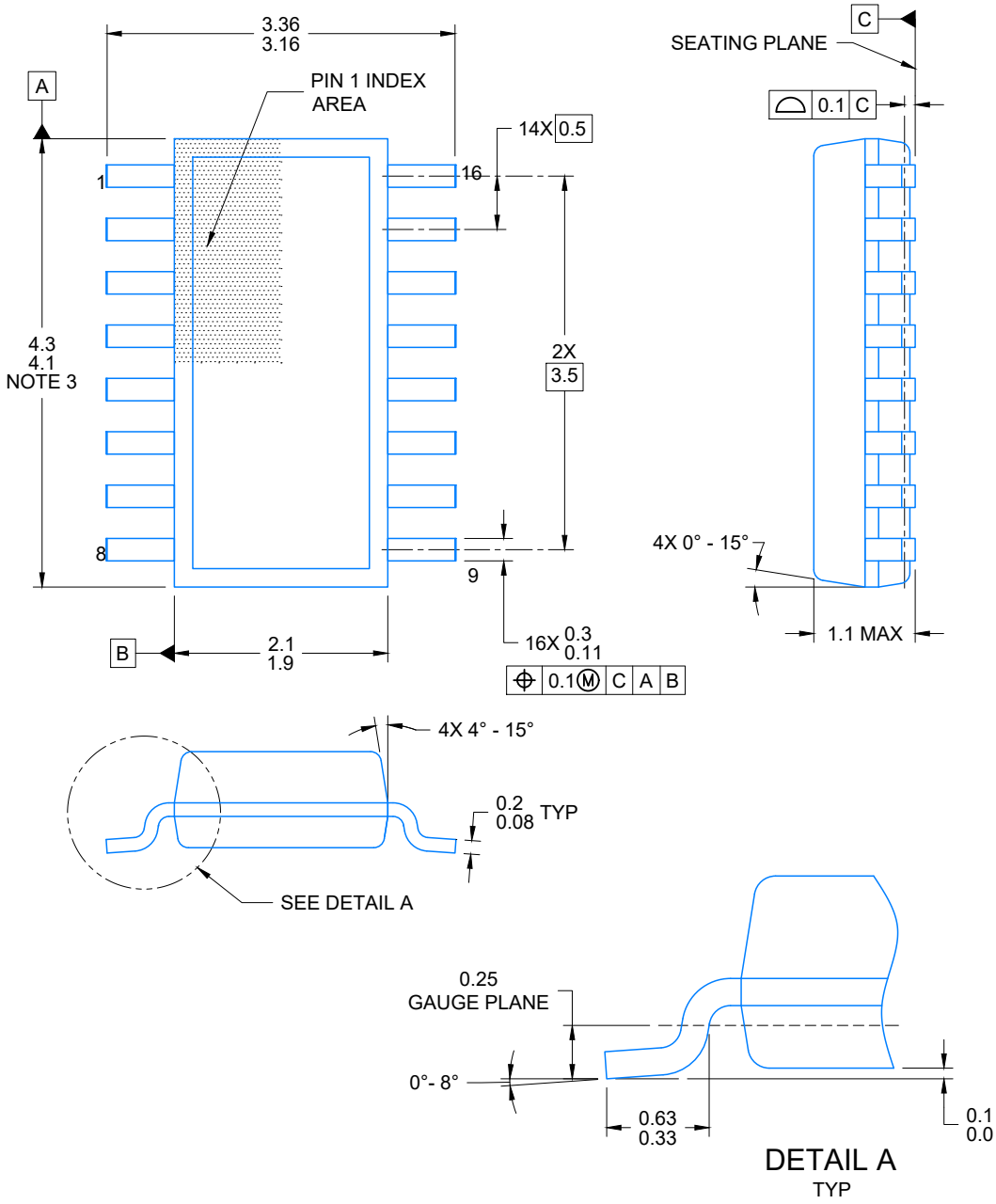

NOTES:

1. All linear dimensions are in millimeters. Any dimensions in parenthesis are for reference only. Dimensioning and tolerancing per ASME Y14.5M.
2. This drawing is subject to change without notice.
3. This dimension does not include mold flash, protrusions, or gate burrs. Mold flash, protrusions, or gate burrs shall not exceed 0.15 per side.
4. This dimension does not include interlead flash. Interlead flash shall not exceed 0.50 per side.
5. Reference JEDEC Registration MO-345, Variation AA

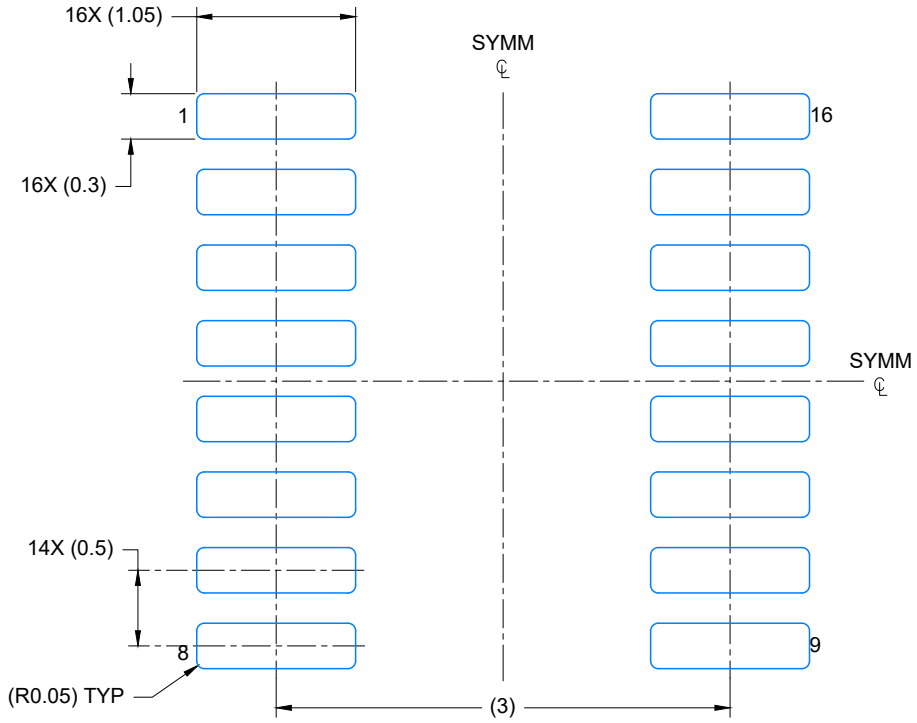

LAND PATTERN EXAMPLE
EXPOSED METAL SHOWN
SCALE: 20X

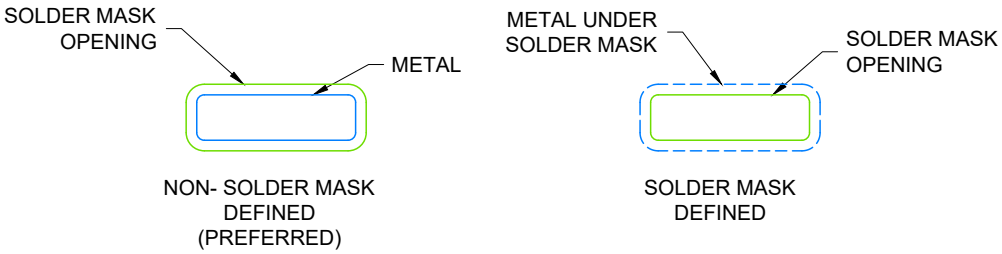

SOLDER MASK DETAILS

4224642/D 07/2024

NOTES: (continued)

6. Publication IPC-7351 may have alternate designs.
7. Solder mask tolerances between and around signal pads can vary based on board fabrication site.

EXAMPLE STENCIL DESIGN

SOT-23-THIN - 1.1 mm max height

PLASTIC SMALL OUTLINE

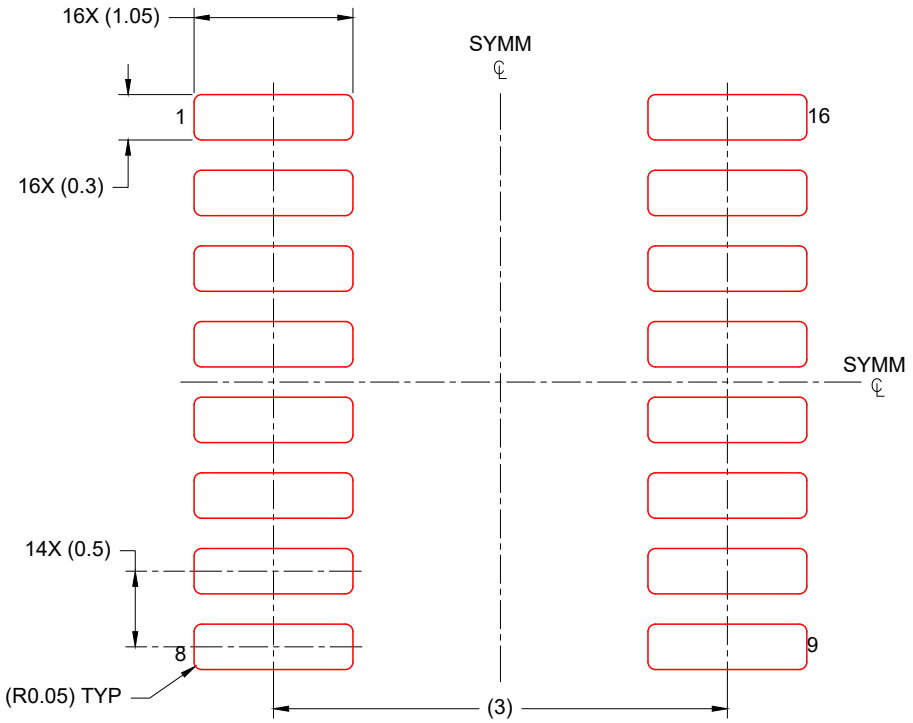

SOLDER PASTE EXAMPLE
BASED ON 0.125 mm THICK STENCIL
SCALE: 20X

4224642/D 07/2024

NOTES: (continued)

8. Laser cutting apertures with trapezoidal walls and rounded corners may offer better paste release. IPC-7525 may have alternate design recommendations.
9. Board assembly site may have different recommendations for stencil design.

PACKAGE OUTLINE

PW0016A

TSSOP - 1.2 mm max height

SMALL OUTLINE PACKAGE

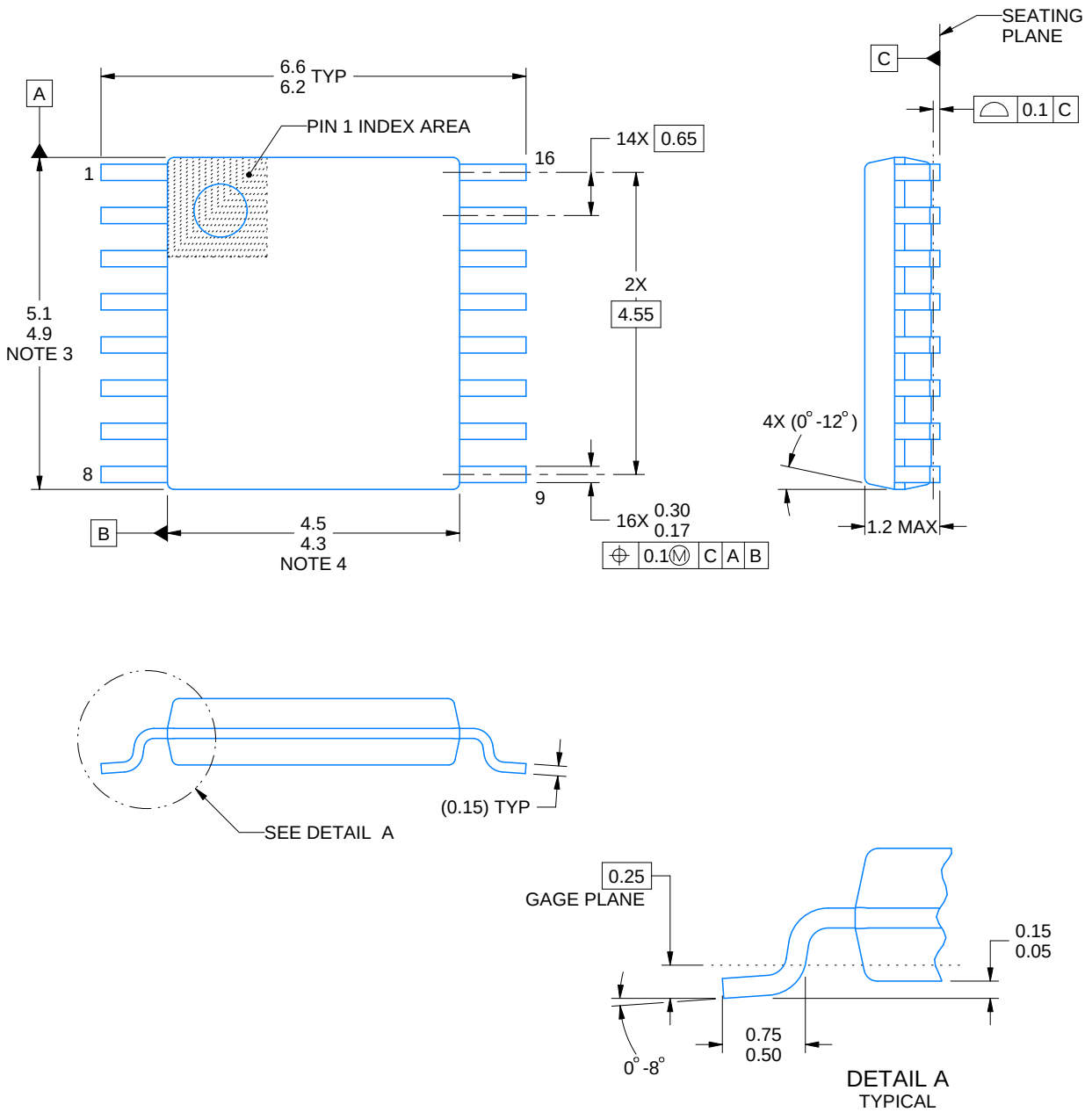

NOTES:

1. All linear dimensions are in millimeters. Any dimensions in parenthesis are for reference only. Dimensioning and tolerancing per ASME Y14.5M.
2. This drawing is subject to change without notice.
3. This dimension does not include mold flash, protrusions, or gate burrs. Mold flash, protrusions, or gate burrs shall not exceed 0.15 mm per side.
4. This dimension does not include interlead flash. Interlead flash shall not exceed 0.25 mm per side.
5. Reference JEDEC registration MO-153.

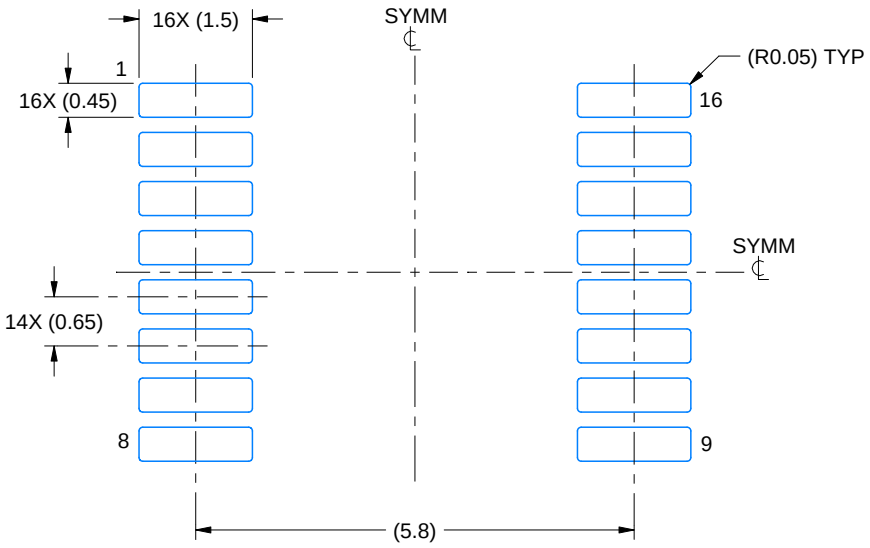

LAND PATTERN EXAMPLE
EXPOSED METAL SHOWN
SCALE: 10X



SOLDER MASK DETAILS

4220204/B 12/2023

NOTES: (continued)

6. Publication IPC-7351 may have alternate designs.
7. Solder mask tolerances between and around signal pads can vary based on board fabrication site.

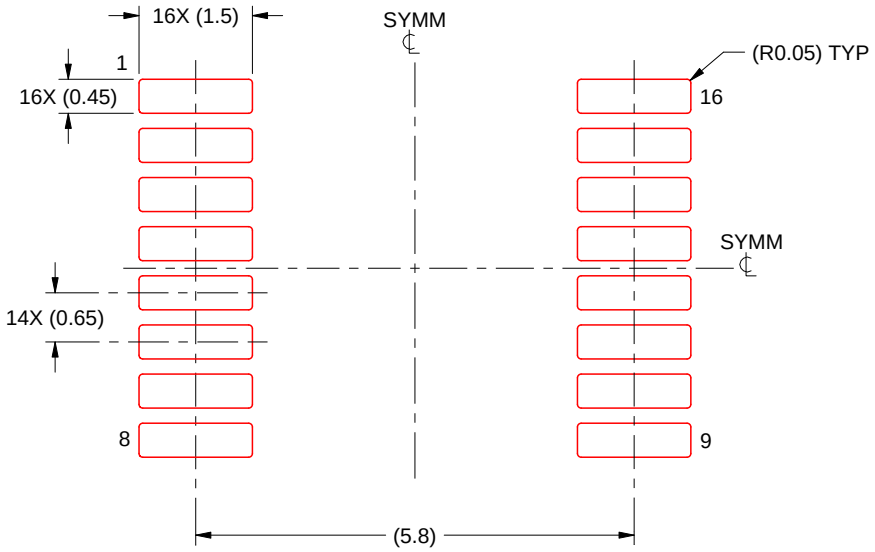

SOLDER PASTE EXAMPLE
BASED ON 0.125 mm THICK STENCIL
SCALE: 10X

4220204/B 12/2023

NOTES: (continued)

8. Laser cutting apertures with trapezoidal walls and rounded corners may offer better paste release. IPC-7525 may have alternate design recommendations.
9. Board assembly site may have different recommendations for stencil design.

RGY0016A

PACKAGE OUTLINE

VQFN - 1 mm max height

PLASTIC QUAD FLATPACK - NO LEAD

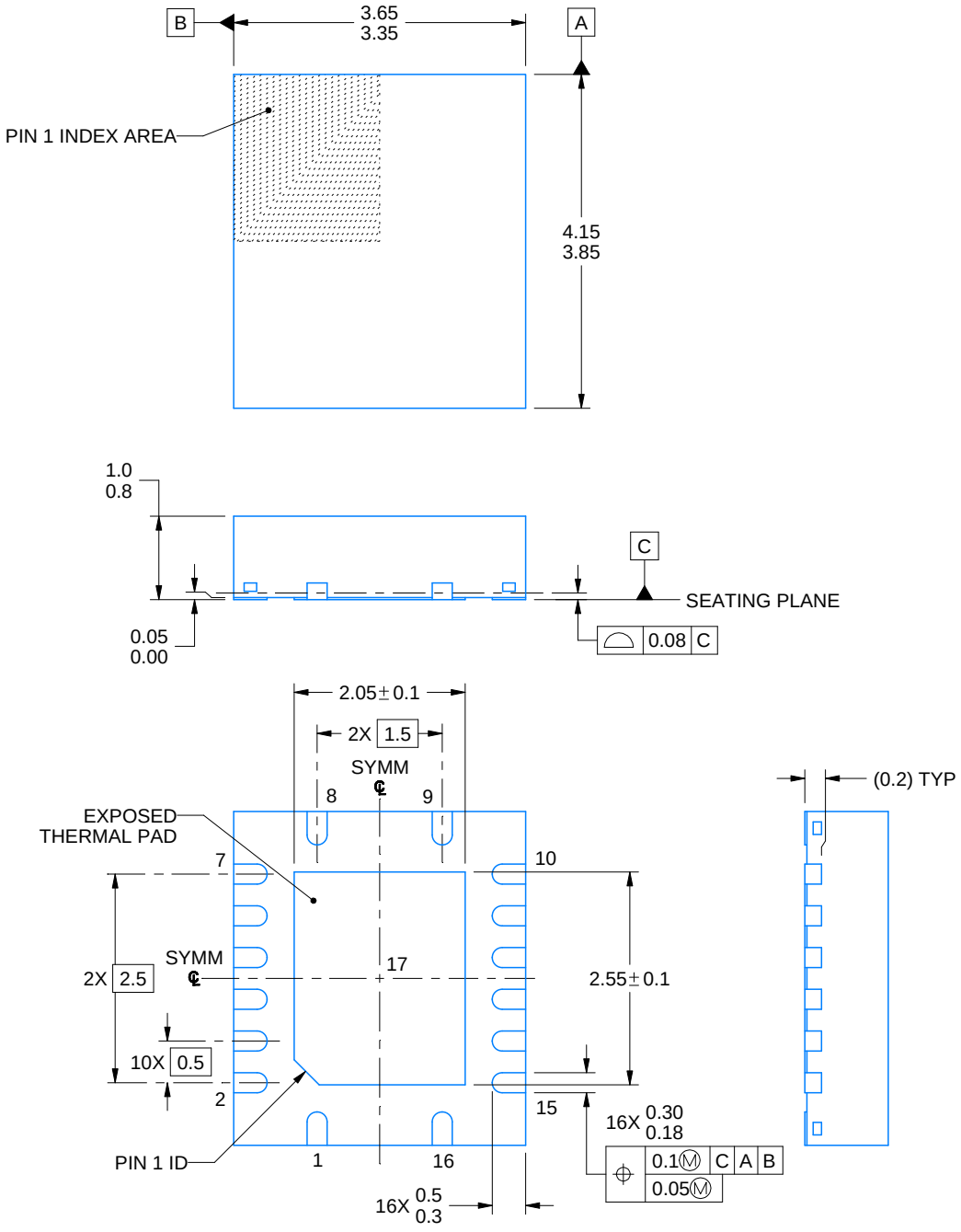

NOTES:

1. All linear dimensions are in millimeters. Any dimensions in parenthesis are for reference only. Dimensioning and tolerancing per ASME Y14.5M.
2. This drawing is subject to change without notice.
3. The package thermal pad must be soldered to the printed circuit board for thermal and mechanical performance.

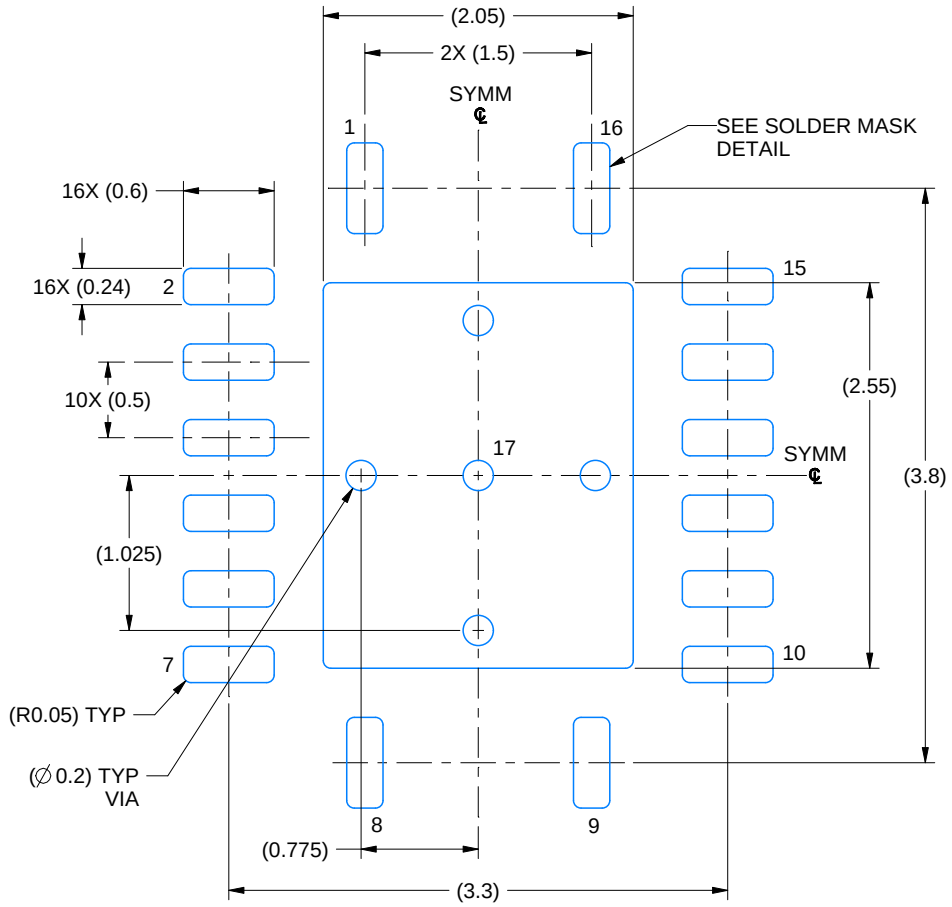

LAND PATTERN EXAMPLE
EXPOSED METAL SHOWN
SCALE: 20X

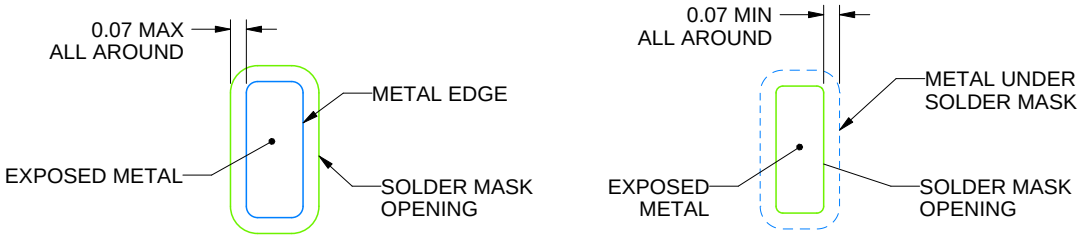

SOLDER MASK DETAILS

4225140/A 07/2019

NOTES: (continued)

4. This package is designed to be soldered to a thermal pad on the board. For more information, see Texas Instruments literature number SLUA271 (www.ti.com/lit/slua271).
5. Vias are optional depending on application, refer to device data sheet. If any vias are implemented, refer to their locations shown on this view. It is recommended that vias under paste be filled, plugged or tented.

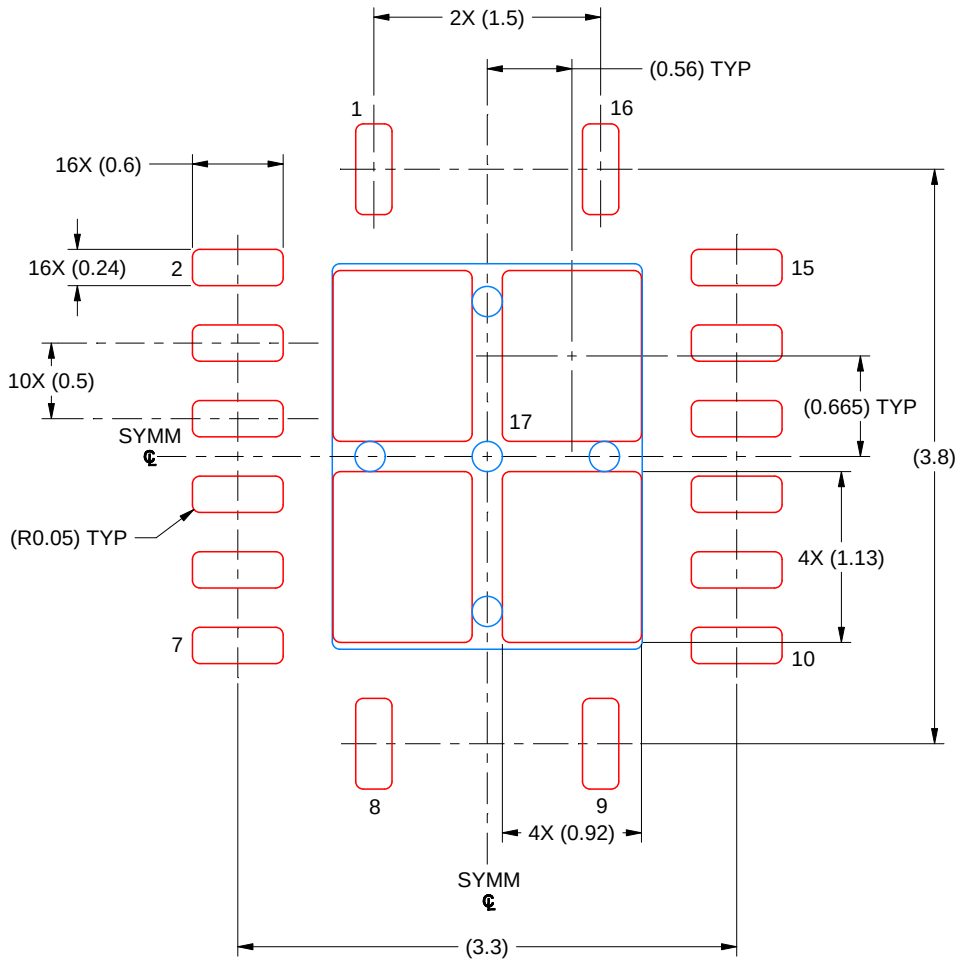

SOLDER PASTE EXAMPLE
BASED ON 0.125 MM THICK STENCIL
SCALE: 20X

EXPOSED PAD 17
80% PRINTED SOLDER COVERAGE BY AREA UNDER PACKAGE

4225140/A 07/2019

NOTES: (continued)

6. Laser cutting apertures with trapezoidal walls and rounded corners may offer better paste release. IPC-7525 may have alternate design recommendations.

IMPORTANT NOTICE AND DISCLAIMER

TI PROVIDES TECHNICAL AND RELIABILITY DATA (INCLUDING DATASHEETS), DESIGN RESOURCES (INCLUDING REFERENCE DESIGNS), APPLICATION OR OTHER DESIGN ADVICE, WEB TOOLS, SAFETY INFORMATION, AND OTHER RESOURCES “AS IS” AND WITH ALL FAULTS, AND DISCLAIMS ALL WARRANTIES, EXPRESS AND IMPLIED, INCLUDING WITHOUT LIMITATION ANY IMPLIED WARRANTIES OF MERCHANTABILITY, FITNESS FOR A PARTICULAR PURPOSE OR NON-INFRINGEMENT OF THIRD PARTY INTELLECTUAL PROPERTY RIGHTS.

These resources are intended for skilled developers designing with TI products. You are solely responsible for (1) selecting the appropriate TI products for your application, (2) designing, validating and testing your application, and (3) ensuring your application meets applicable standards, and any other safety, security, regulatory or other requirements.

These resources are subject to change without notice. TI grants you permission to use these resources only for development of an application that uses the TI products described in the resource. Other reproduction and display of these resources is prohibited. No license is granted to any other TI intellectual property right or to any third party intellectual property right. TI disclaims responsibility for, and you fully indemnify TI and its representatives against any claims, damages, costs, losses, and liabilities arising out of your use of these resources.

TI’s products are provided subject to TI’s Terms of Sale, TI’s General Quality Guidelines, or other applicable terms available either on ti.com or provided in conjunction with such TI products. TI’s provision of these resources does not expand or otherwise alter TI’s applicable warranties or warranty disclaimers for TI products. Unless TI explicitly designates a product as custom or customer-specified, TI products are standard, catalog, general purpose devices.

TI objects to and rejects any additional or different terms you may propose.

Copyright © 2026, Texas Instruments Incorporated

Last updated 10/2025