TPSM86125x 3V to 17V Input, 1A, Synchronous Buck Module in QFN Package

1 Features

- Configured for a wide range of applications
  - 3V to 17V wide input voltage range
  - Fixed 3.3V output for TPSM861253
  - 0.6V to 10V output range for TPSM861252
  - 0.6V to 5.5V output range for TPSM861257
  - 0.6V reference voltage
  - ±1% for 0.6Vref accuracy at 25°C
  - ±1.5% for 0.6Vref accuracy at –40°C to 125°C
  - ±1% for 3.3Vout accuracy from 0 to 65°C
  - Integrated 55mΩ and 24mΩ MOSFETs
  - 100µA low quiescent current for TPSM861252
  - 1.4MHz switching frequency
  - Maximum 95% large duty cycle operation
  - 1.2V precision EN threshold voltage
  - 1.6ms fixed typical soft-start time
- Ease of use and small design size
  - TPSM861252 Eco-mode, TPSM861253/7 FCCM mode at light load
  - Fast transient D-CAP3™ control mode
  - Easy layout with integrated inductor and bootstrap capacitor
  - Support start-up with prebiased output voltage
  - Open-drain power-good indicator
  - Non-latch for OV, OT, and UVLO protection
  - Hiccup mode in UV protection
  - Cycle-by-cycle OC and NOC protection
  - –40°C to 125°C operating junction temperature
  - 3.3mm × 4mm × 2mm QFN package
- Create a custom design using the TPSM86125x with the WEBENCH® Power Designer

2 Applications

- Merchant network and server PSU
- AC/DC adapters/PSU
- Factory automation and control
- Test and measurement

3 Description

The TPSM86125x is a simple, easy-to-use, high-efficiency, high-power density, synchronous buck module with input voltage ranging from 3V to 17V and supports up to 1A continuous current.

The TPSM86125x employs D-CAP3 control mode to provide a fast transient response and to support low-ESR output capacitors with no requirement for external compensation. The device can support up to 95% duty cycle operation.

The TPSM861252 operates in Eco-mode, which maintains high efficiency during light load. The TPSM861257 operates in FCCM mode, which keeps the same frequency and lower output ripple during all load conditions. TPSM861253 is a fixed 3.3V output voltage part with FCCM mode. The device also integrates the divider resistors and a feedforward capacitor inside the module. The TPSM86125x integrates complete protection including OVP, OCP, UVLO, OTP, and UVP with hiccup.

The device is available in QFN package. The junction temperature is specified from –40°C to 125°C.

Device Information

PART NUMBER(3)	MODE	OUTPUT VOLTAGE	PACKAGE(1)	PACKAGE SIZE(2)
TPSM861253	FCCM	3.3V	RDX (QFN-FCMOD, 7)	4.00mm × 3.30mm
TPSM861252	ECO	0.6V to 10V		
TPSM861257	FCCM	0.6V to 5.5V		

(1) For more information, see Section 11.
(2) The package size (length × width) is a nominal value and includes pins, where applicable.
(3) See *the Family Devices* table.

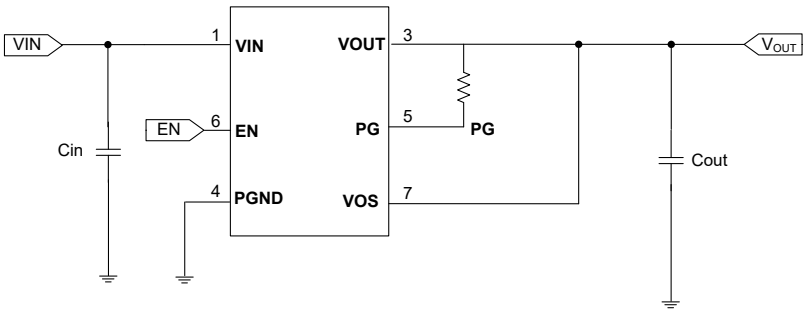

TPSM861253 Simplified Schematic

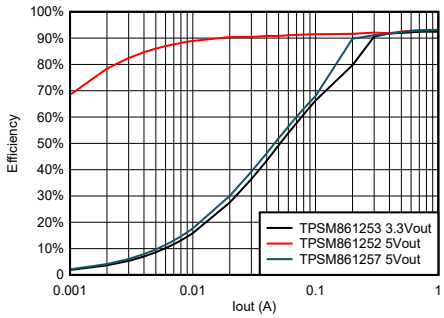

TPSM86125x Efficiency at V_{IN} = 12V

An IMPORTANT NOTICE at the end of this data sheet addresses availability, warranty, changes, use in safety-critical applications, intellectual property matters and other important disclaimers. PRODUCTION DATA.

Table of Contents

1 Features....1
2 Applications....1
3 Description....1
4 Family Devices....3
5 Pin Configuration and Functions....3
6 Specifications....4
6.1 Absolute Maximum Ratings....4
6.2 ESD Ratings....4
6.3 Recommended Operating Conditions....4
6.4 Thermal Information....5
6.5 Electrical Characteristics....5
6.6 Typical Characteristics....7
7 Detailed Description....11
7.1 Overview....11
7.2 Functional Block Diagram....11
7.3 Feature Description....12
7.4 Device Functional Modes....14
8 Application and Implementation....15
8.1 Application Information....15
8.2 Typical Application....15
8.3 Power Supply Recommendations....19
8.4 Layout....20
9 Device and Documentation Support....22
9.1 Device Support....22
9.2 Receiving Notification of Documentation Updates....22
9.3 Support Resources....22
9.4 Trademarks....22
9.5 Electrostatic Discharge Caution....22
9.6 Glossary....22
10 Revision History....23
11 Mechanical, Packaging, and Orderable Information....23

Copyright © 2024 Texas Instruments Incorporated

4 Family Devices

PART NUMBER	CURRENT (A)	OUTPUT VOLTAGE (V)	MODE
TPSM861252	0 to 1	0.6 to 10	ECO
TPSM861257	0 to 1	0.6 to 5.5	FCCM
TPSM861253	0 to 1	3.3	FCCM

5 Pin Configuration and Functions

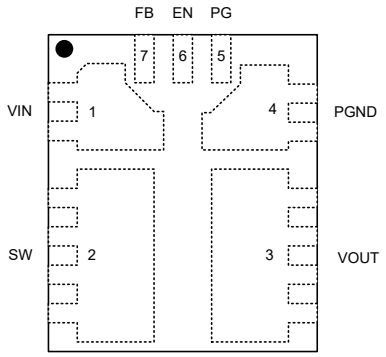

Figure 5-1. TPSM861252 and TPSM861257 RDX Package, 7-Pin QFN-FCMOD (Top View)

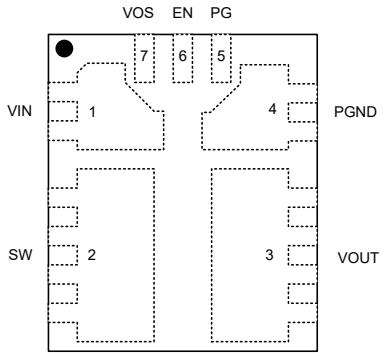

Figure 5-2. TPSM861253 RDX Package, 7-Pin QFN-FCMOD (Top View)

Table 5-1. Pin Functions

Pin		Type[(1)]	Description
Name	NO.		
VIN	1	P	Input voltage supply pin. Connect the input decoupling capacitors between VIN and GND.
SW	2	NC	Switch pin of the power stage. Do not connect, leave floating.
VOUT	3	P	Output connection. Connect recommended output capacitance from VOUT to PGND.
PGND	4	G	Power ground connection
PG	5	A	Power-good open drain output. PG pin can be floating.
EN	6	A	Enable pin of buck converter. Drive EN high to turn on the converter; drive EN low to turn off the converter. Internal pulldown to GND by a resistance.
FB	7	A	Converter feedback input for TPSM861252 and TPSM861257. Connect to the center top of the resistor divider between output voltage and ground.
VOS	7	A	Converter feedback input for TPSM861253. Connect to output voltage directly.

(1) A = Analog, P = Power, G = Ground

Copyright © 2024 Texas Instruments Incorporated

6 Specifications

6.1 Absolute Maximum Ratings

over operating free-air temperature range (unless otherwise noted)[1]

		MIN	MAX	UNIT
Input voltage	VIN	–0.3	19	V
Input voltage	VOS, EN, PG, FB	–0.3	6	V
GND	GND	–0.3	0.3	V
Output voltage	VOUT(TPSM861252)	–0.3	11	V
Output voltage	VOUT(TPSM861257)	–0.3	6	V
Mechanical shock	Mil-STD-883D, Method 2002.3, 1 ms, 1/2 sine, mounted		1500	G
Mechanical vibration	Mil-STD-883D, Method 2007.2, 20 to 2000 Hz		20	G
Operating junction temperature range, TJ		–40	150	°C
Storage temperature, Tstg	Storage temperature, Tstg	–55	150	°C

(1) Operation outside the Absolute Maximum Ratings may cause permanent device damage. Absolute Maximum Ratings do not imply functional operation of the device at these or any other conditions beyond those listed under Recommended Operating Conditions. If used outside the Recommended Operating Conditions but within the Absolute Maximum Ratings, the device may not be fully functional, and this may affect device reliability, functionality, performance, and shorten the device lifetime.

6.2 ESD Ratings

			VALUE	UNIT
$V_{(ESD)}$	Electrostatic discharge	Human body model (HBM), per ANSI/ESDA/JEDEC JS-001[1]	± 2000	V
		Charged device model (CDM), per ANSI/ESDA/JEDEC JS-002[2]	± 500	

(1) JEDEC document JEP155 states that 500V HBM allows safe manufacturing with a standard ESD control process.
(2) JEDEC document JEP157 states that 250V CDM allows safe manufacturing with a standard ESD control process.

6.3 Recommended Operating Conditions

over operating free-air temperature range (unless otherwise noted)

		MIN	NOM	MAX	UNIT
Input voltage	VIN	3		17	V
Input voltage	VOS, EN, PG, FB			5.5	V
Output voltage	VOUT(TPSM861252)			10	V
Output voltage	VOUT(TPSM861257)			5.5	V
Output voltage	VOUT(TPSM861253)		3.3		V
Output current	IO	0		1	A
T_J	Operating junction temperature	–40		125	°C
Tstg	Storage temperature	–40		150	°C

Copyright © 2024 Texas Instruments Incorporated

6.4 Thermal Information

THERMAL METRIC[1]		TPSM86125x RDX 7 PINS	UNIT
$R_{\theta JA}$	Junction-to-ambient thermal resistance	61.3	°C/W
$R_{\theta JA_effective}$	Junction-to-ambient thermal resistance on EVM board	40[2]	°C/W
$R_{\theta JC(top)}$	Junction-to-case (top) thermal resistance	60.8	°C/W
$R_{\theta JB}$	Junction-to-board thermal resistance	20.0	°C/W
Ψ_{JT}	Junction-to-top characterization parameter	7.5	°C/W
Ψ_{JB}	Junction-to-board characterization parameter	19.2	°C/W
$R_{\theta JC(bot)}$	Junction-to-case (bottom) thermal resistance	N/A	°C/W

(1) For more information about traditional and new thermal metrics, see the Semiconductor and IC Package Thermal Metrics application report.
(2) This RθJA_effective is tested on TPSM86125xEVM board (4 layer board, copper thickness of top and bottom layer are 2oz, and copper thickness of internal GND is 1oz) at Vin = 12V, Vout = 5V, Iout = 1A , TA = 25ºC.

6.5 Electrical Characteristics

Over operating T_J = –40ºC – 125ºC, V_{VIN} = 12V (unless otherwise noted)

PARAMETER		TEST CONDITIONS	MIN	TYP	MAX	UNIT
INPUT SUPPLY VOLTAGE						
VIN	Input voltage range	VIN	3		17	V
I_{VIN}	VIN supply current	No load, V_{EN} = 5V, non-switching, ECO version		100		µA
I_{VIN}	VIN supply current	No load, V_{EN} = 5V, non-switching, FCCM version		370		µA
I_{INSDN}	VIN shutdown current	No load, V_{EN} = 0V		2		µA
UVLO						
UVLO	VIN undervoltage lockout	Wake up VIN voltage	2.8	2.9	3.0	V
UVLO	VIN undervoltage lockout	Shut down VIN voltage	2.6	2.7	2.8	V
UVLO	VIN undervoltage lockout	Hysteresis VIN voltage		200		mV
FEEDBACK VOLTAGE						
VFB	FB voltage	T_J = 25°C	594	600	606	mV
VFB	FB voltage	T_J = –40°C to 125°C	591	600	609	mV
VOUT	TPSM861253 output voltage	T_J = 0°C to 65°C	3.27	3.3	3.33	V
VOUT	TPSM861253 output voltage	T_J = –40°C to 125°C	3.25	3.3	3.35	V
MOSFET						
$R_{DS(ON)HI}$	High-side MOSFET Rds(on)	T_J = 25°C, V_{VIN} ≥ 5V		55		mΩ
		T_J = 25°C, V_{VIN} = 3V [1]		68		mΩ
$R_{DS(ON)LO}$	Low-side MOSFET Rds(on)	T_J = 25°C,V_{VIN} ≥ 5V		24		mΩ
		T_J = 25°C, V_{VIN} = 3V [1]		30		mΩ
DUTY CYCLE and FREQUENCY CONTROL						
F_{SW}	Switching frequency	T_J = 25°C, V_{VOUT} = 3.3V		1.4		MHz
$T_{OFF(MIN)}$ [1]	Minimum off-time	V_{FB} = 0.5V		110		ns
$T_{ON(MIN)}$	Minimum on-time			60		ns
CURRENT LIMIT						
I_{OCL_LS}	Over current threshold	Valley current set point for TPSM861252 and TPSM861257	1.5	2.3	3.1	A

6.5 Electrical Characteristics (continued)

Over operating T_J = –40ºC – 125ºC, V_{VIN} = 12V (unless otherwise noted)

PARAMETER		TEST CONDITIONS	MIN	TYP	MAX	UNIT
I_{OCL_LS}	Over current threshold	Valley current set point for TPSM861253	1.5	2.3	2.9	A
I_{NOCL}	Negative over current threshold	Valley current set point	1.5	2.0	2.5	A
LOGIC THRESHOLD						
$V_{EN(ON)}$	EN threshold high-level		1.15	1.20	1.25	V
$V_{EN(OFF)}$	EN threshold low-level		0.90	1.00	1.10	V
V_{ENHYS}	EN hystersis			200		mV
REN1	EN pulldown resister			2		MΩ
OUTPUT DISCHARGE and SOFT START						
t_{SS}	Internal soft-start time			1.6		ms
OUTPUT UNDERVOLTAGE AND OVERVOLTAGE PROTECTION						
V_{OVP}	OVP trip threshold		110	115	120	%
t_{OVPDLY}	OVP prop deglitch			24		us
V_{UVP}	UVP trip threshold		55	60	65	%
t_{UVPDLY}	UVP prop deglitch			220		us
t_{UVPEN}	Output hiccup enable delay relative to SS time	UVP detect		14		ms
PGOOD						
TPGDLY	PG start-up delay	PG from low to high		1		ms
TPGDLY	PG start-up delay	PG from high to low		28		us
VPGTH	PG threshold	VFB falling (fault)	80	85	90	%
VPGTH	PG threshold	VFB rising (good)	85	90	95	%
VPGTH	PG threshold	VFB rising (fault)	110	115	120	%
VPGTH	PG threshold	VFB falling (good)	105	110	115	%
VPG_L	PG sink current capability	IOL = 4mA			0.4	V
IPGLK	PG leak current	VPgood = 5.5V			1	uA
THERMAL PROTECTION						
T_{OTP} (1)	OTP trip threshold			155		°C
T_{OTPHSY} (1)	OTP hysteresis			20		°C

(1) Specified by design

Copyright © 2024 Texas Instruments Incorporated

6.6 Typical Characteristics

T_J = –40°C to 125°C, V_{IN} = 12V (unless otherwise noted)

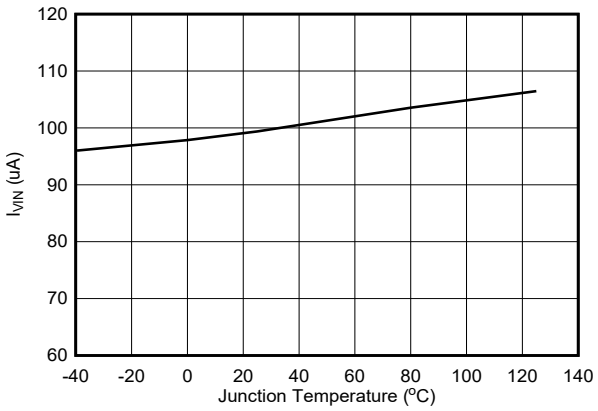

Figure 6-1. TPSM861252 Quiescent Current

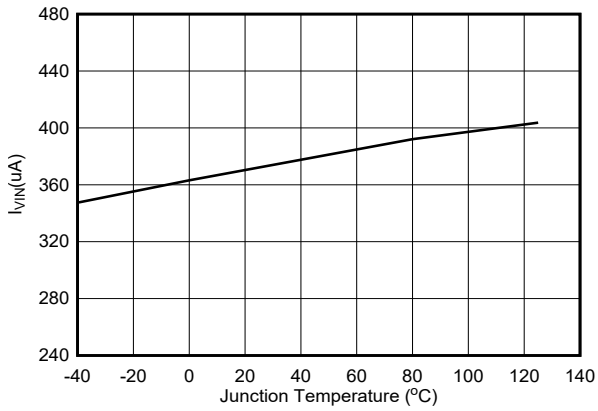

Figure 6-2. TPSM861253 and TPSM861257 Quiescent Current

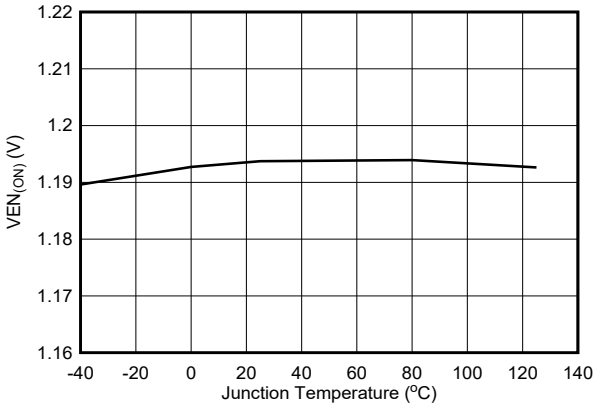

Figure 6-3. Enable On Threshold Voltage

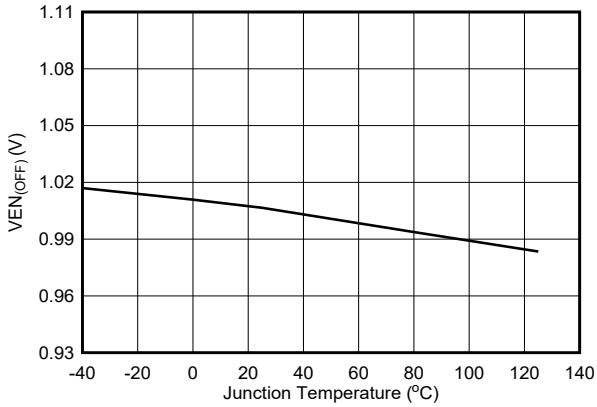

Figure 6-4. Enable Off Threshold Voltage

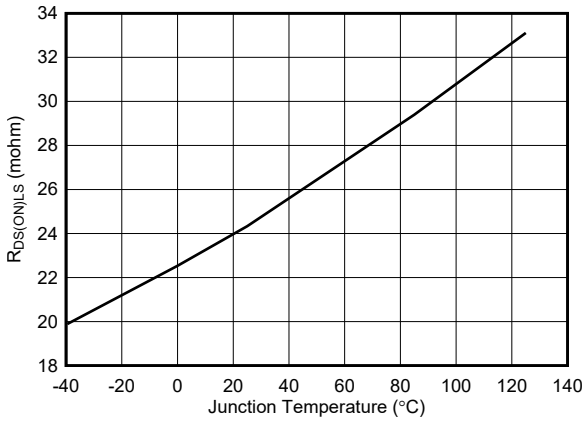

Figure 6-5. Low-Side $R_{DS(ON)}$

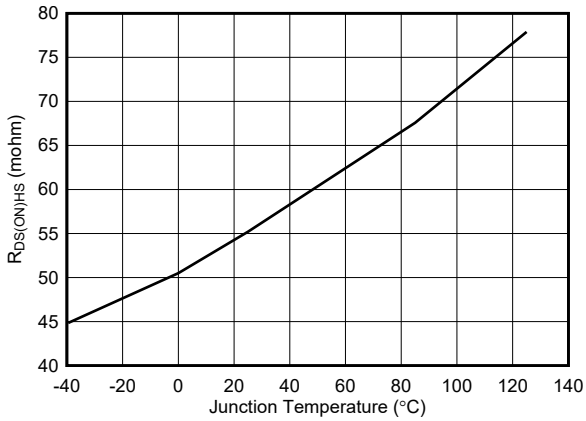

Figure 6-6. High-Side $R_{DS(ON)}$

6.6 Typical Characteristics (continued)

T_J = –40°C to 125°C, V_{IN} = 12V (unless otherwise noted)

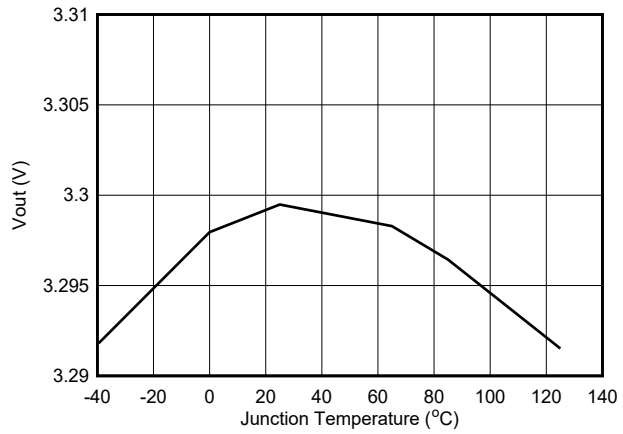

Figure 6-7. TPSM861253 Output Voltage

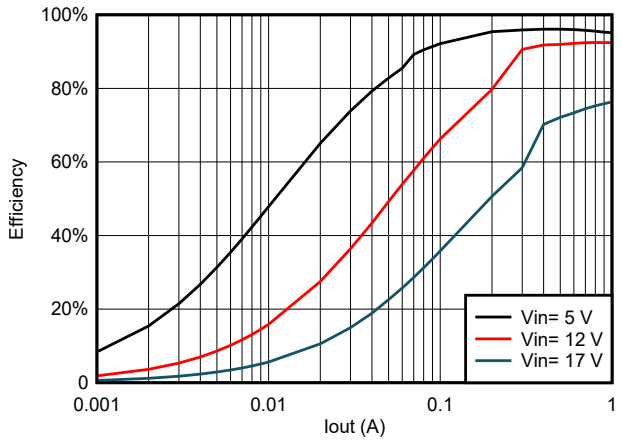

Figure 6-8. TPSM861253 Efficiency

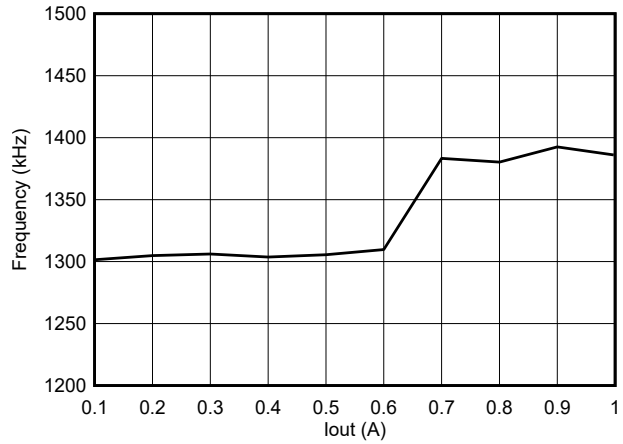

Figure 6-9. TPSM861253 Frequency vs Loading at 12V Input Voltage

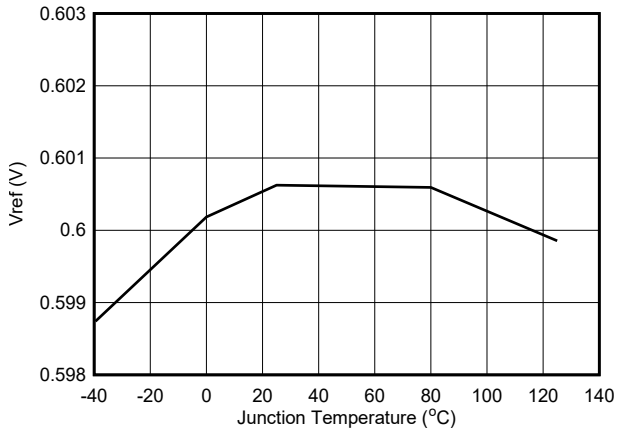

Figure 6-10. TPSM861252 and TPSM861257 Vref voltage

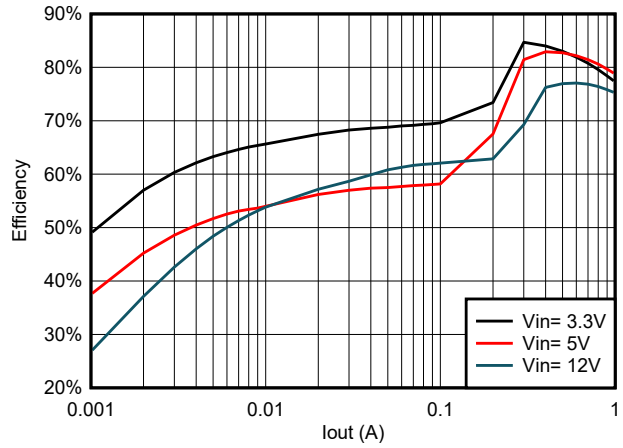

Figure 6-11. TPSM861252 Efficiency at 0.6V_{OUT}

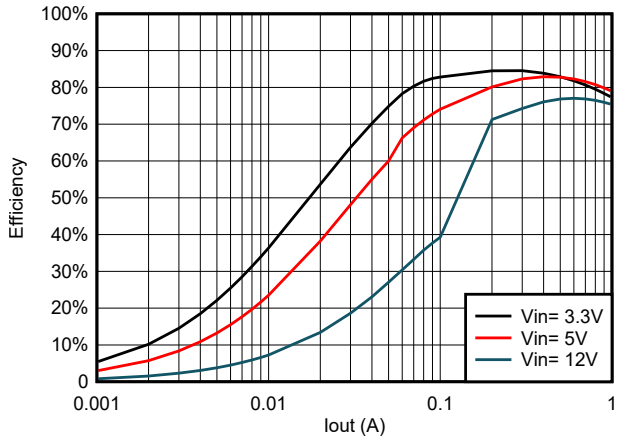

Figure 6-12. TPSM861257 Efficiency at 0.6V_{OUT}

Copyright © 2024 Texas Instruments Incorporated

6.6 Typical Characteristics (continued)

T_J = –40°C to 125°C, V_{IN} = 12V (unless otherwise noted)

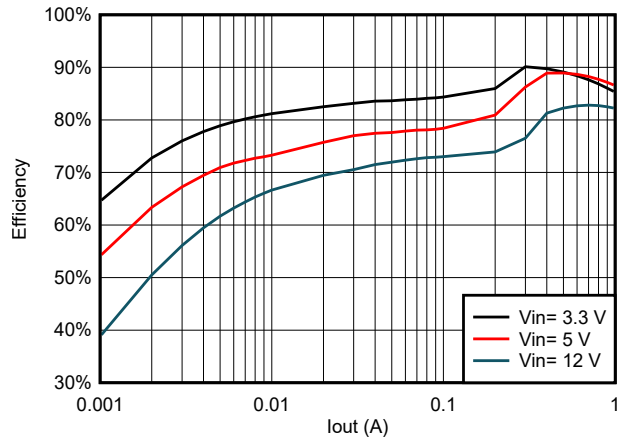

Figure 6-13. TPSM861252 Efficiency at 1.05V_{OUT}

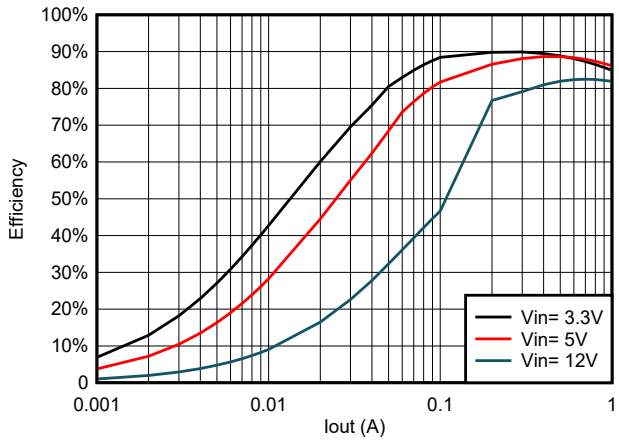

Figure 6-14. TPSM861257 Efficiency at 1.05V_{OUT}

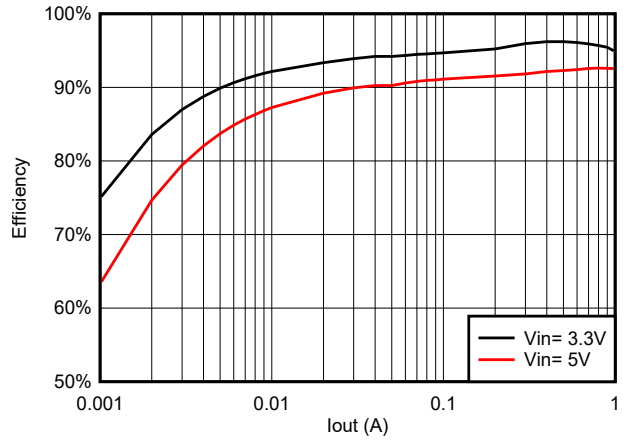

Figure 6-15. TPSM861252 Efficiency at 3.3V_{OUT}

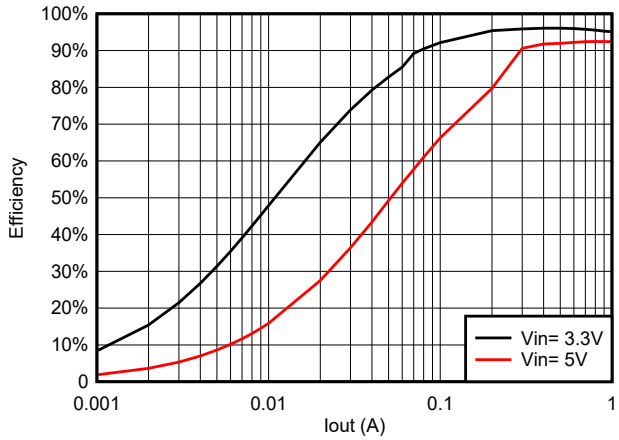

Figure 6-16. TPSM861257 Efficiency at 3.3V_{OUT}

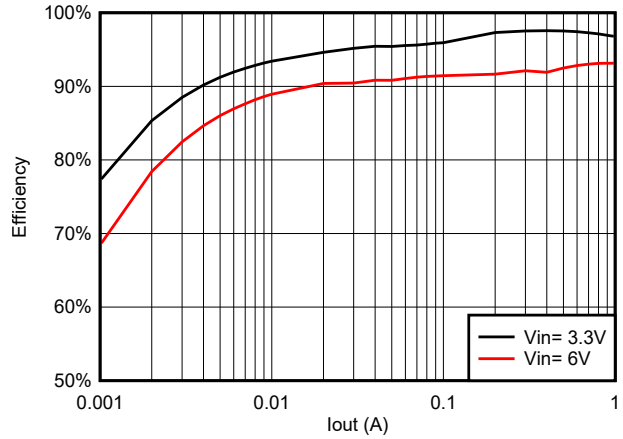

Figure 6-17. TPSM861252 Efficiency at 5V_{OUT}

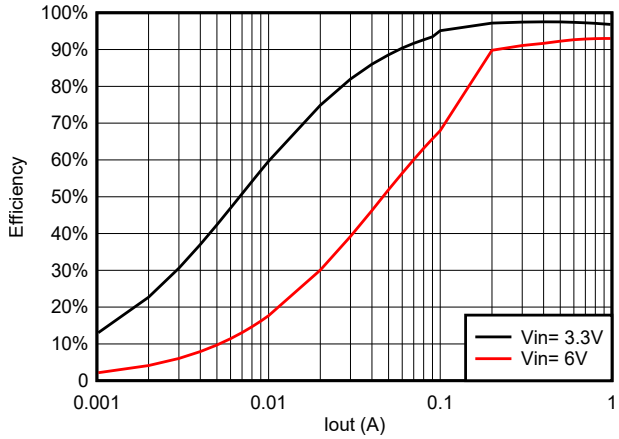

Figure 6-18. TPSM861257 Efficiency at 5V_{OUT}

Copyright © 2024 Texas Instruments Incorporated

6.6 Typical Characteristics (continued)

T_J = –40°C to 125°C, V_{IN} = 12V (unless otherwise noted)

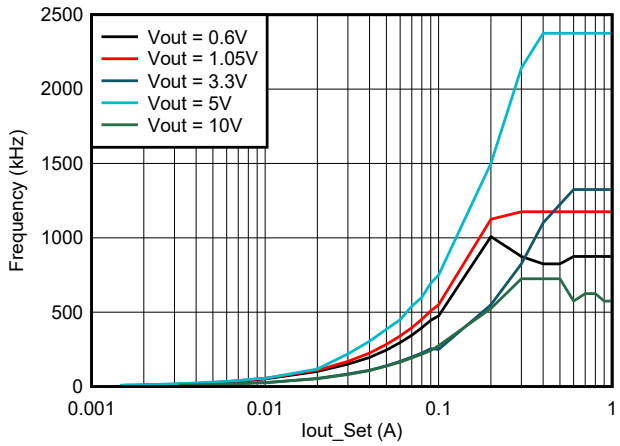

Figure 6-19. TPSM861252 Frequency vs Loading at 12V Input Voltage

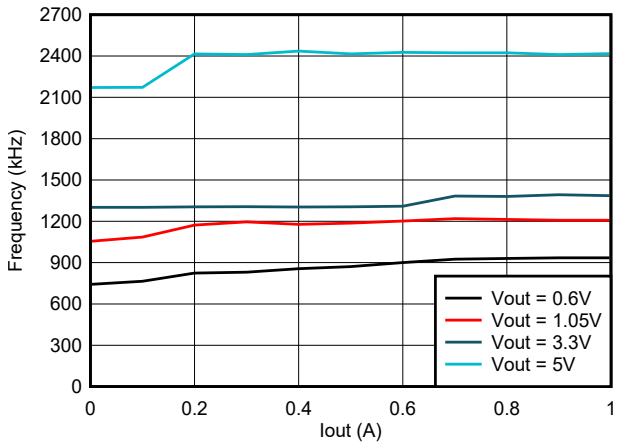

Figure 6-20. TPSM861257 Frequency vs Loading at 12V Input Voltage

Copyright © 2024 Texas Instruments Incorporated

7 Detailed Description

7.1 Overview

The TPSM86125x is a 1A, integrated FETs and inductor, synchronous buck module that operates from 3V to 17V input voltage. TPSM861252 output voltage range is 0.6V to 10V. TPSM861257 output voltage range is 0.6V to 5.5V. TPSM861253 is a fixed 3.3V output voltage device. The device family employs the D-CAP3 control mode that provides fast transient response with no external compensation components and an accurate feedback voltage. The proprietary D-CAP3 control mode enables low external component count, ease of design, and optimization of the power design for cost, size, and efficiency. The topology provides a seamless transition between CCM operating mode at higher load condition and DCM operation mode at lighter load condition.

The Eco-mode version allows the TPSM861252 to maintain high efficiency at light load. The FCCM version allows the TPSM861257 and TPSM861253 to maintain a fixed switching frequency and lower voltage output ripple. The TPSM861253 is able to adapt to both low equivalent series resistance (ESR) output capacitors such as POSCAP or SP-CAP, and ultra-low ESR ceramic capacitors.

7.2 Functional Block Diagram

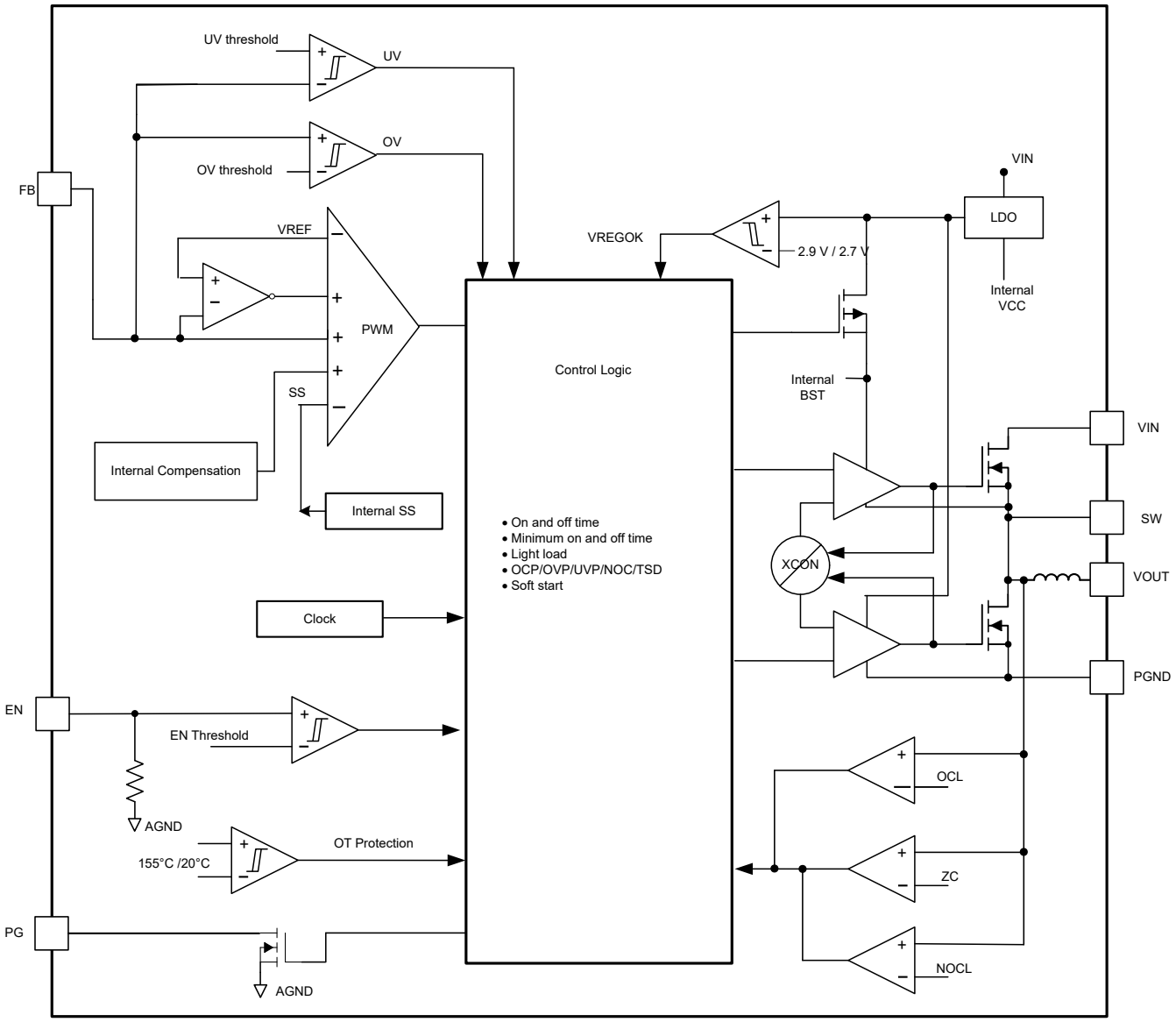

7.3 Feature Description

7.3.1 PWM Operation and D-CAP3™ Control Mode

The main control loop of the buck is an adaptive on-time pulse width modulation (PWM) controller that supports a proprietary D-CAP3 control mode. The D-CAP3 control mode combines adaptive on-time control with an internal compensation circuit for pseudo-fixed frequency and low external component count configuration with both low-ESR and ceramic output capacitors. The device is stable even with virtually no ripple at the output. The TPSM86125x also includes an error amplifier that makes the output voltage very accurate.

At the beginning of each cycle, the high-side MOSFET is turned on. This MOSFET is turned off after an internal one-shot timer expires. This one-shot duration is set proportional to the output voltage, V_{OUT}, and is inversely proportional to the converter input voltage, V_{IN}, to maintain a pseudo-fixed frequency over the input voltage range, hence, called adaptive on-time control. The one-shot timer is reset and the high-side MOSFET is turned on again when the feedback voltage falls below the reference voltage. An internal ripple generation circuit is added to reference voltage to emulate the output ripple, enabling the use of very low-ESR output capacitors such as multi-layered ceramic caps (MLCC). No external current sense network or loop compensation is required for D-CAP3 control mode.

7.3.2 Eco-mode Control

The TPSM861252 is designed with advanced Eco-mode to maintain high light load efficiency. As the output current decreases from heavy load condition, the inductor current is also reduced and eventually comes to a point that the rippled valley touches zero level, which is the boundary between continuous conduction and discontinuous conduction mode. The rectifying MOSFET is turned off when the zero inductor current is detected. As the load current further decreases, the converter runs into discontinuous conduction mode. The on time is kept almost the same as in continuous conduction mode so that discharging the output capacitor with smaller load current to the level of the reference voltage takes longer. This event makes the switching frequency lower, proportional to the load current, and keeps the light load efficiency high. Use the below equation to calculate the transition point to the light load operation $I_{OUT(LL)}$ current. The typical inductance is 2.2 uH.

$$I_{out(LL)} = \frac{1}{2 \times L \times f_{SW}} \times \frac{(V_{IN} - V_{OUT}) \times V_{OUT}}{V_{IN}} \quad (1)$$

7.3.3 Soft Start and Prebiased Soft Start

The TPSM86125x has an internal fixed soft-start time. The EN default status is low. When the EN pin becomes high, the internal soft-start function begins ramping up the reference voltage to the PWM comparator.

If the output capacitor is prebiased at start-up, the devices initiate switching and start ramping up only after the internal reference voltage becomes higher than the feedback voltage, V_{FB}. This scheme makes sure that the converter ramps up smoothly into the regulation point.

7.3.4 Overvoltage Protection

The TPSM86125x has the overvoltage protection feature. When the output voltage becomes higher than the OVP threshold, the OVP is triggered with a 24µs deglitch time. Both the high-side MOSFET and the low-side MOSFET drivers are turned off. When the overvoltage condition is removed, the device returns to switching.

7.3.5 Frequency

TPSM86125x default frequency is about 1.4MHz. When output voltage is higher than 3.6V and the ratio of output voltage to input voltage is < 0.62 (the hysteresis is 0.04), frequency changes to 2MHz to decrease output voltage ripple. A summary is as below table.

Copyright © 2024 Texas Instruments Incorporated

Table 7-1. TPSM86125x Frequency at CCM

Conditions	Conditions	Frequency
Output voltage < 3.6V		1.4MHz
Output voltage ≥ 3.6V	Duty ≥ 0.62	1.4MHz
	Duty < 0.62	2MHz

7.3.6 Large Duty Operation

The TPSM86125x can support large duty operations up to 95% by smoothly dropping down the switching frequency. When V_{IN} / V_{OUT} < 1.6 and V_{FB} is lower than internal V_{REF}, the switching frequency is allowed to smoothly drop to make t_{ON} extended to implement the large duty operation and keep output voltage. The minimum switching frequency is limited to approximately 600kHz.

7.3.7 Current Protection and Undervoltage Protection

The output overcurrent limit (OCL) is implemented using a cycle-by-cycle valley detect control circuit. The switch current is monitored during the off state by measuring the low-side FET drain-to-source voltage. This voltage is proportional to the switch current. To improve accuracy, the voltage sensing is temperature compensated.

During the on time of the high-side FET switch, the switch current increases at a linear rate determined by the following:

- V_{IN}
- V_{OUT}
- On time
- Output inductor value

During the on time of the low-side FET switch, this current decreases linearly. The average value of the switch current is the load current, I_{OUT}. If the monitored valley current is above the OCL level, the converter maintains a low-side FET on and delays the creation of a new set pulse, even the voltage feedback loop requires one, until the current level becomes OCL level or lower. In subsequent switching cycles, the on time is set to a fixed value and the current is monitored in the same manner.

There are some important considerations for this type of overcurrent protection. The load current is higher than the overcurrent threshold by one half of the peak-to-peak inductor ripple current. Also, when the current is limited, the output voltage tends to fall as the demanded load current can be higher than the current available from the converter, which can cause the output voltage to fall. When the FB voltage falls below the UVP threshold voltage, the UVP comparator detects the fall and the device shuts down after the UVP deglitch time and restarts after the hiccup wait time.

When the overcurrent condition is removed, the output voltage returns to the regulated value.

The TPSM861253 is a FCCM mode part. In this mode, the device has negative inductor current at light loading. The device has NOC (negative overcurrent) protection to avoid too large negative current. NOC protection detects the valley of inductor current. When the valley value of inductor current exceeds the NOC threshold, the IC turns off the low side then turns on the high side. When the NOC condition is removed, the device returns to normal switching.

7.3.8 Undervoltage Lockout (UVLO) Protection

UVLO protection monitors the internal regulator voltage. When the voltage is lower than UVLO threshold voltage, the device is shut off. This protection is a non-latch protection.

7.3.9 Thermal Shutdown

The device monitors the temperature of itself. If the temperature exceeds the threshold value, the device is shut off. This protection is a non-latch protection.

Copyright © 2024 Texas Instruments Incorporated

7.4 Device Functional Modes

7.4.1 Eco-mode Operation

The TPSM861252 operates in Eco-mode, which maintains high efficiency at light loading. As the output current decreases from heavy load conditions, the inductor current is also reduced and eventually comes to a point where the rippled valley touches zero level, which is the boundary between continuous conduction and discontinuous conduction mode. The rectifying MOSFET is turned off when the zero inductor current is detected. As the load current further decreases, the converter runs into discontinuous conduction mode. The on time is kept almost the same as in continuous conduction mode so that discharging the output capacitor with smaller load current to the level of the reference voltage takes more time. This event makes the switching frequency lower, proportional to the load current, and keeps the light load efficiency high.

7.4.2 FCCM Mode Operation

The TPSM861253 and TPSM861257 operates in forced CCM (FCCM) mode, which keeps the converter operating in continuous current mode during light load conditions and allows the inductor current to become negative. During FCCM mode, the switching frequency is maintained at an almost constant level over the entire load range, which is designed for applications requiring tight control of the switching frequency and output voltage ripple at the cost of lower efficiency under light load.

Copyright © 2024 Texas Instruments Incorporated

8 Application and Implementation

Note

Information in the following applications sections is not part of the TI component specification, and TI does not warrant its accuracy or completeness. TI's customers are responsible for determining suitability of components for their purposes, as well as validating and testing their design implementation to confirm system functionality.

8.1 Application Information

The device is a buck DC/DC module that is typically used to convert a higher DC voltage to a lower DC voltage with a maximum available output current of 1A. Use the following design procedure to select component values for TPSM86125x. Alternately, the WEBENCH® Power Designer software can be used to generate a complete design. The WEBENCH Power Designer software uses an iterative design procedure and accesses a comprehensive database of components when generating a design. This section presents a simplified discussion of the design process.

8.2 Typical Application

The application schematic in Figure 8-1 is developed to meet the requirements in Table 8-1. This circuit is available as the evaluation module (EVM). The sections provide the design procedure.

Figure 8-1 shows the 12V input, 3.3V output converter schematic.

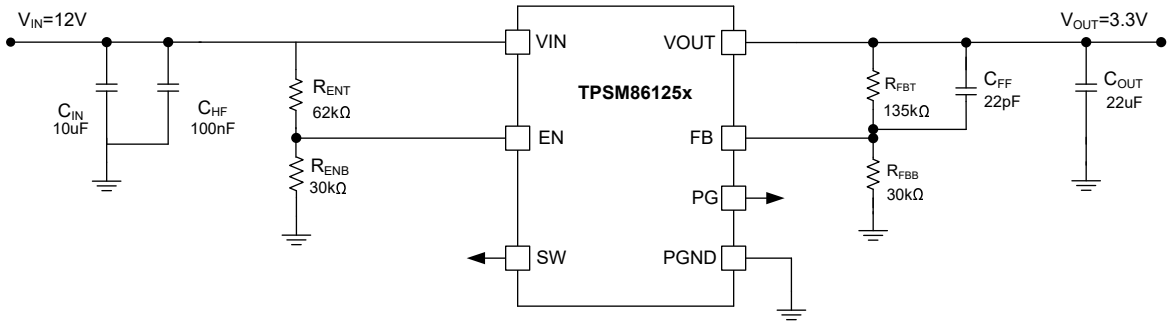

Figure 8-1. Schematic

8.2.1 Design Requirements

Table 8-1 shows the design parameters for this application.

Table 8-1. Design Parameters

PARAMETER		CONDITIONS	MIN	TYP	MAX	UNIT
V_{OUT}	Output voltage			3.3		V
I_{OUT}	Output current			1		A
ΔV_{OUT}	Transient response	0.1A – 0.9A load step, 2A/µs slew rate		±3% × V_{OUT}		V
V_{IN}	Input voltage		3.8	12	17	V
$V_{OUT(ripple)}$	Output voltage ripple	CCM condition		20		mV
T_A	Ambient temperature			25		°C

8.2.2 Detailed Design Procedure

8.2.2.1 Custom Design with WEBENCH® Tools

Click here to create a custom design using the TPSM86125x device with the WEBENCH® Power Designer.

1. Start by entering the input voltage (V_{IN}), output voltage (V_{OUT}), and output current (I_{OUT}) requirements.

2. Optimize the design for key parameters such as efficiency, footprint, and cost using the optimizer dial.
3. Compare the generated design with other possible solutions from Texas Instruments.

The WEBENCH Power Designer provides a customized schematic along with a list of materials with real-time pricing and component availability.

In most cases, these actions are available:

- Run electrical simulations to see important waveforms and circuit performance
- Run thermal simulations to understand board thermal performance
- Export customized schematic and layout into popular CAD formats
- Print PDF reports for the design, and share the design with colleagues

Get more information about WEBENCH tools at www.ti.com/WEBENCH.

8.2.2.2 Output Voltage Resistors Selection

The output voltage is set with a resistor divider from the output node to the FB pin. TI recommends using 1% tolerance or better divider resistors. Start by using Equation 2 to calculate V_{OUT}.

To improve efficiency at very light loads, consider using larger value resistors. If the values are too high, the regulator is more susceptible to noise and voltage errors from the FB input current are noticeable. Use a 10kΩ resistor for R_{FBB} to start the design.

$$V_{OUT} = 0.6 \times \left(1 + \frac{R_{FBT}}{R_{FBB}}\right) \tag{2}$$

8.2.2.3 Output Filter Selection

TPSM86125x integrates a 2.2uH inductor. TI suggests to use the following output cap to make the loop stable. For TPSM861252 and TPSM861257, TI suggests CFF range to use 10pF to 100pF.

Table 8-2. Recommended Component Values

Output Voltage (V)	R_{FBT} (kΩ)	R_{FBB} (kΩ)	Minimum C_{OUT} (µF)	Typical C_{OUT} (µF)	Maximum C_{OUT} (µF)	C_{FF} (pF)
0.8	3.3	10.0	10	22	88	—
1.05	7.5	10.0	10	22	88	—
2.5	95.0	30.0	10	22	88	22
3.3	135.0	30.0	22	22	100	22
5	220.0	30.0	22	22	100	22
10	470.0	30.0	22	44	100	10

The capacitor value and ESR determines the amount of output voltage ripple. The TPSM861253 are intended for use with ceramic or other low-ESR capacitors. Use Equation 3 to determine the required RMS current rating for the output capacitor.

$$I_{LO(RMS)} = \sqrt{I_O^2 + \frac{1}{12} \times I_{P-P}^2} \tag{3}$$

For this design, one MuRata GRM21BR61A226ME44L 22µF output capacitor is used. The typical ESR is 2mΩ.

8.2.2.4 Input Capacitor Selection

The TPSM86125x requires an input decoupling capacitor and a bulk capacitor is needed depending on the application. TI recommends a ceramic capacitor over 10µF for the decoupling capacitor. TI recommends an additional 0.1µF capacitor from the VIN pin to ground to provide high frequency filtering. The capacitor voltage rating must be greater than the maximum input voltage.

Copyright © 2024 Texas Instruments Incorporated

8.2.2.5 Enable Circuit

The EN pin controls the turn-on and turn-off of the device. When EN pin voltage is above the turn-on threshold, the device starts switching and when the EN pin voltage falls below the turn-off threshold IC stops switching. The default status is low. There is a 2MΩ internal pulldown resistor in the EN pin.

EN can be controlled by a typical divider resistor circuit from Vin or by a voltage of lower than 5.5V.

Because there is a 2MΩ internal pulldown resistor in the EN pin, TPSM861253 also supports to only connect a top resistor from VIN pin to EN pin. EN voltage is got by the divide net of top resistor and 2MΩ. EN voltage is not allowed to be over 6V.

Copyright © 2024 Texas Instruments Incorporated

8.2.3 Application Curves

The following data is tested With V_{IN} = 12V, V_{OUT} = 3.3V, T_A = 25°C, unless otherwise specified.

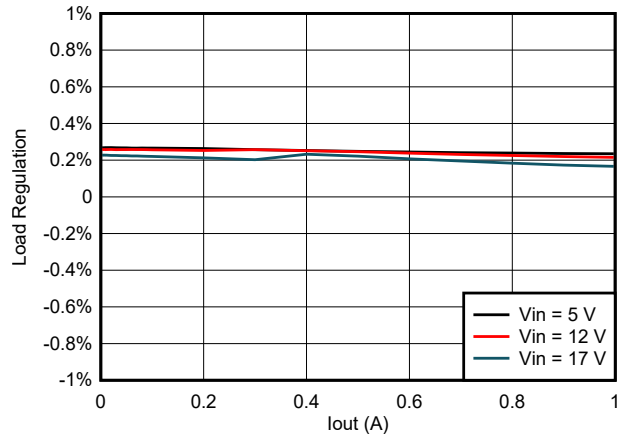

Figure 8-2. TPSM861253 Load Regulation vs Loading

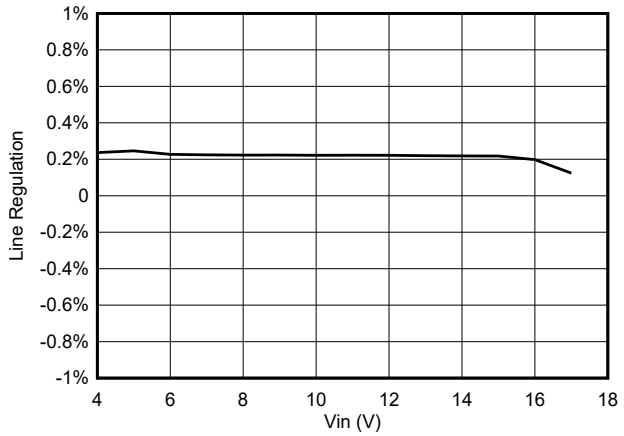

Figure 8-3. TPSM861253 Line Regulation vs V_{IN} at 1A Loading

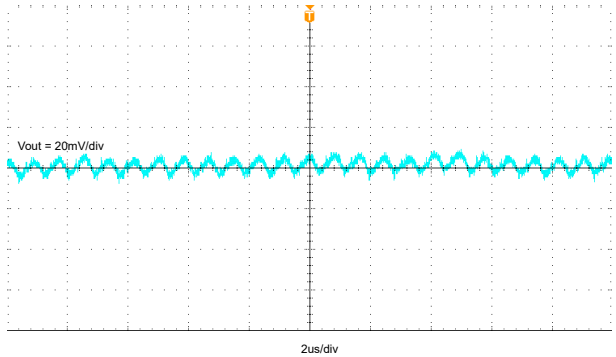

Figure 8-4. TPSM861253 Output Voltage Ripple at 1A Loading

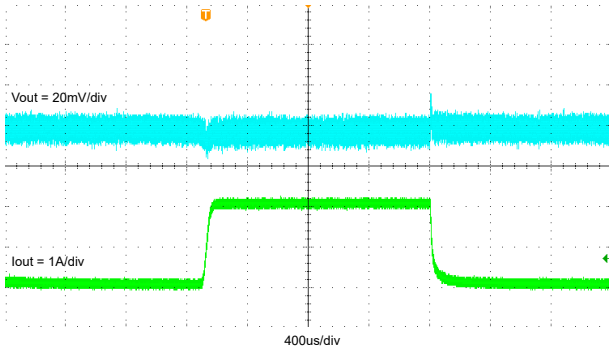

Figure 8-5. TPSM861253 Transient Response With 0A to 1A

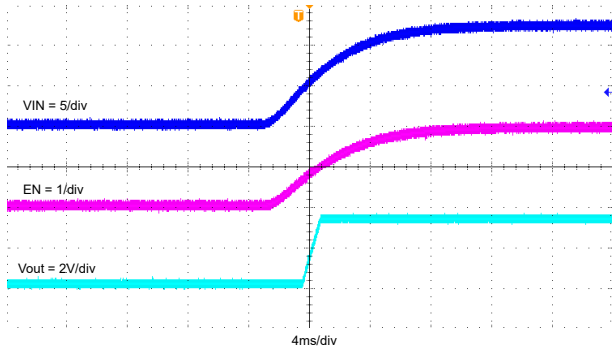

Figure 8-6. Start-Up With VIN Rising, IOUT = 1A

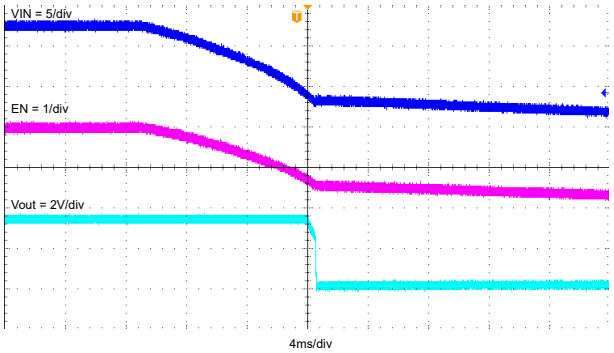

Figure 8-7. Shutdown With VIN Falling, IOUT = 1A

Copyright © 2024 Texas Instruments Incorporated

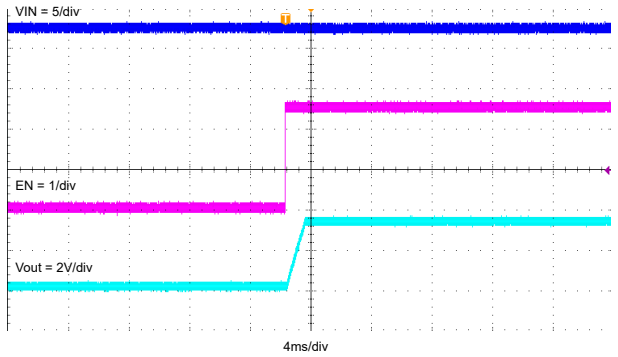

Figure 8-8. Start-Up Through EN, IOUT = 1A

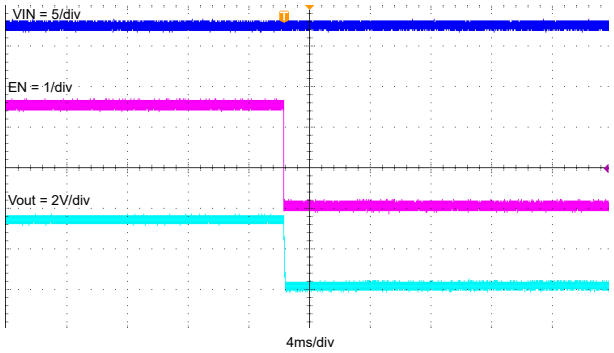

Figure 8-9. Shutdown Through EN, IOUT = 1A

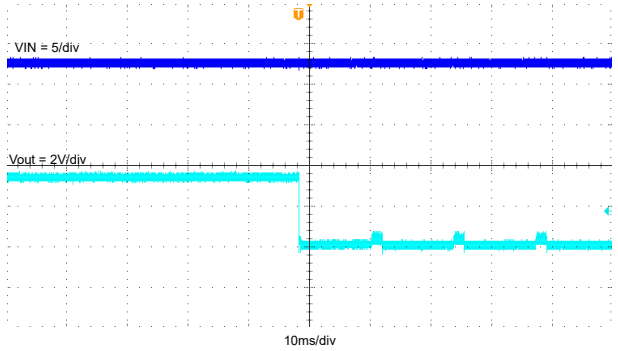

Figure 8-10. Normal Operation to Output Hard Short

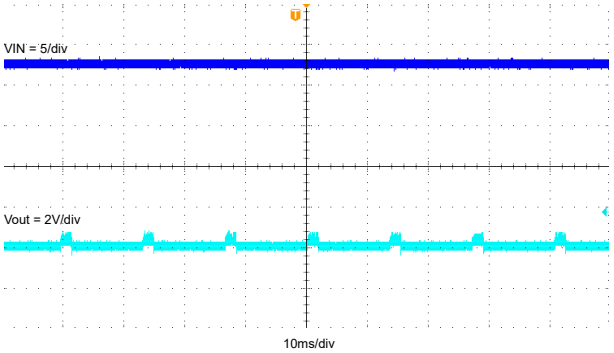

Figure 8-11. Output Hard Short Hiccup

8.3 Power Supply Recommendations

The TPSM86125x is designed to operate from input supply voltages in the range of 3V to 17V. Buck converters require the input voltage to be higher than the output voltage for proper operation.

8.4 Layout

8.4.1 Layout Guidelines

- Make sure the VIN and GND traces are as wide as possible to reduce trace impedance. The wide areas are also an advantage from the view point of heat dissipation.
- Place the input capacitor and output capacitor as close to the device as possible to minimize trace impedance.
- Provide sufficient vias for the input capacitor and output capacitor.
- Connect a separate VOUT path to VOS pin for TPSM861253. Connect a seperate VOUT path to the upper feedback resistor for TPSM861252 and TPSM861257.
- Place a voltage feedback loop away from the high-voltage switching trace, and preferably has ground shield.
- Make sure the GND trace between the output capacitor and the GND pin are as wide as possible to minimize the trace impedance.

8.4.2 Layout Example

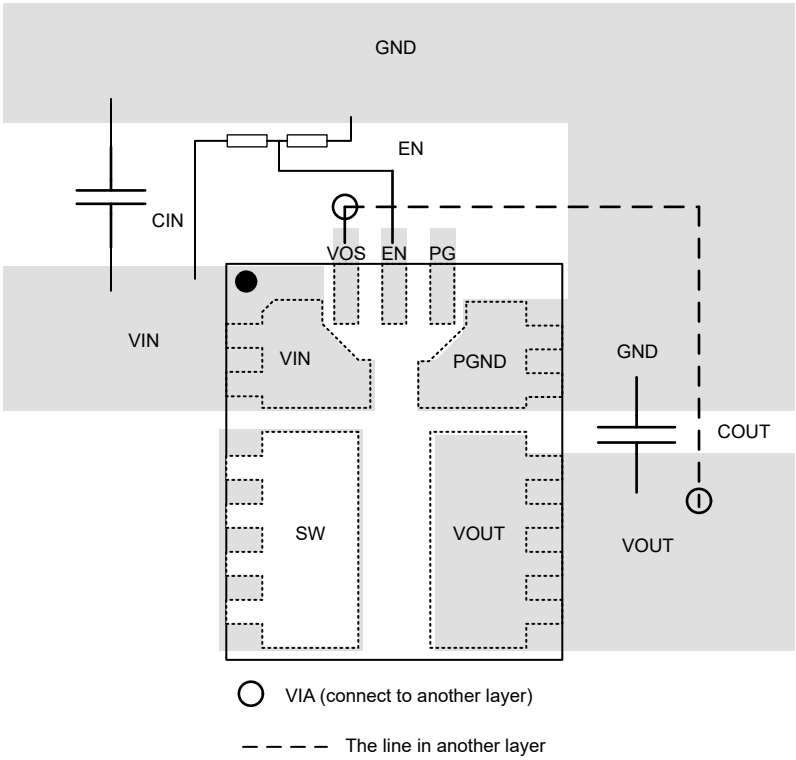

Figure 8-12. Layout Example - TPSM861253

Copyright © 2024 Texas Instruments Incorporated

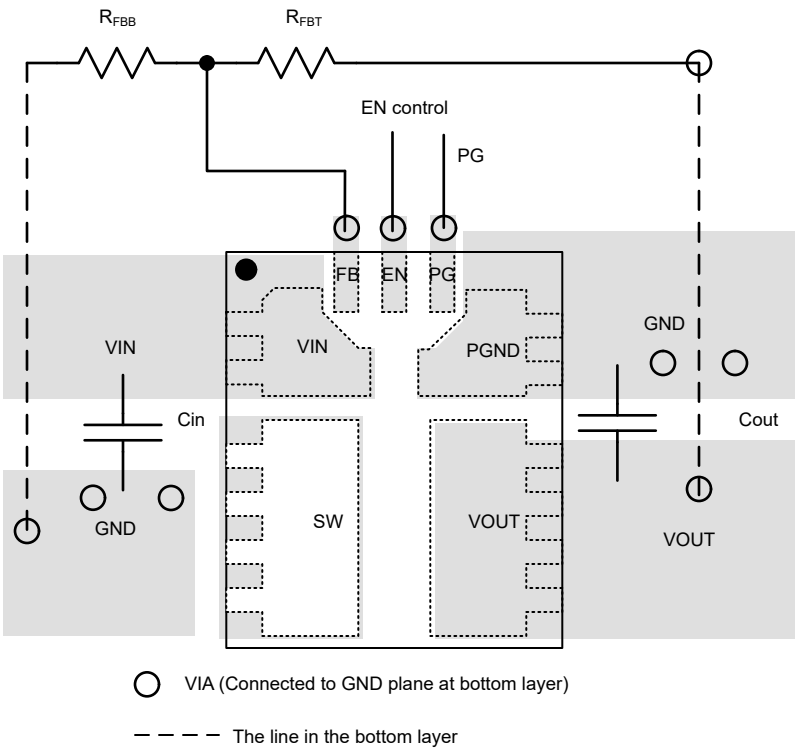

Figure 8-13. Layout Example - TPSM861252 and TPSM861257

9 Device and Documentation Support

9.1 Device Support

9.1.1 Development Support

9.1.1.1 Custom Design with WEBENCH® Tools

Click here to create a custom design using the TPSM86125x device with the WEBENCH® Power Designer.

1. Start by entering the input voltage (V_{IN}), output voltage (V_{OUT}), and output current (I_{OUT}) requirements.
2. Optimize the design for key parameters such as efficiency, footprint, and cost using the optimizer dial.
3. Compare the generated design with other possible solutions from Texas Instruments.

The WEBENCH Power Designer provides a customized schematic along with a list of materials with real-time pricing and component availability.

In most cases, these actions are available:

- Run electrical simulations to see important waveforms and circuit performance
- Run thermal simulations to understand board thermal performance
- Export customized schematic and layout into popular CAD formats
- Print PDF reports for the design, and share the design with colleagues

Get more information about WEBENCH tools at www.ti.com/WEBENCH.

9.2 Receiving Notification of Documentation Updates

To receive notification of documentation updates, navigate to the device product folder on ti.com. Click on *Notifications* to register and receive a weekly digest of any product information that has changed. For change details, review the revision history included in any revised document.

9.3 Support Resources

TI E2E™ support forums are an engineer's go-to source for fast, verified answers and design help — straight from the experts. Search existing answers or ask your own question to get the quick design help you need.

Linked content is provided "AS IS" by the respective contributors. They do not constitute TI specifications and do not necessarily reflect TI's views; see TI's Terms of Use.

9.4 Trademarks

D-CAP3™ and TI E2E™ are trademarks of Texas Instruments.
WEBENCH® is a registered trademark of Texas Instruments.
All trademarks are the property of their respective owners.

9.5 Electrostatic Discharge Caution

This integrated circuit can be damaged by ESD. Texas Instruments recommends that all integrated circuits be handled with appropriate precautions. Failure to observe proper handling and installation procedures can cause damage.

ESD damage can range from subtle performance degradation to complete device failure. Precision integrated circuits may be more susceptible to damage because very small parametric changes could cause the device not to meet its published specifications.

9.6 Glossary

TI Glossary	This glossary lists and explains terms, acronyms, and definitions.

Copyright © 2024 Texas Instruments Incorporated

10 Revision History

NOTE: Page numbers for previous revisions may differ from page numbers in the current version.

Changes from Revision A (January 2024) to Revision B (March 2024)	Page
• Added adjustable output voltage module TPSM861252 and TPSM861257 description	1
• Added TPSM861252 and TPSM861257 description and updated package information table and efficiency curve	1
• Added TPSM861252 and TPSM861257 in family table	3
• Added pinout map of TPSM861252 and TPSM861257	3
• Added TPSM861252 and TPSM861257 figure	7
• Added adjustable output voltage module TPSM861252 and TPSM861257 description	11
• Added TPSM861252 Eco-mode description	14
• Added WEBENCH description	15
• Added TPSM861252 and TPSM861257 filter selection	16

Changes from Revision * (September 2023) to Revision A (January 2024)	Page
• Changed document status from Advance Information to Production Data	1

11 Mechanical, Packaging, and Orderable Information

The following pages include mechanical, packaging, and orderable information. This information is the most current data available for the designated devices. This data is subject to change without notice and revision of this document. For browser-based versions of this data sheet, refer to the left-hand navigation.

PACKAGING INFORMATION

Orderable part number	Status (1)	Material type (2)	Package | Pins	Package qty | Carrier	RoHS (3)	Lead finish/ Ball material (4)	MSL rating/ Peak reflow (5)	Op temp (°C)	Part marking (6)
TPSM861252RDXR	Active	Production	QFN-FCMOD (RDX) | 7	3000 | LARGE T&R	Yes	NIPDAU	Level-2-260C-1 YEAR	-40 to 125	861252
TPSM861252RDXR.A	Active	Production	QFN-FCMOD (RDX) | 7	3000 | LARGE T&R	Yes	NIPDAU	Level-2-260C-1 YEAR	-40 to 125	861252
TPSM861253RDXR	Active	Production	QFN-FCMOD (RDX) | 7	3000 | LARGE T&R	Yes	NIPDAU	Level-2-260C-1 YEAR	-40 to 125	861253
TPSM861253RDXR.A	Active	Production	QFN-FCMOD (RDX) | 7	3000 | LARGE T&R	Yes	NIPDAU	Level-2-260C-1 YEAR	-40 to 125	861253
TPSM861257RDXR	Active	Production	QFN-FCMOD (RDX) | 7	3000 | LARGE T&R	Yes	NIPDAU	Level-2-260C-1 YEAR	-40 to 125	861257
TPSM861257RDXR.A	Active	Production	QFN-FCMOD (RDX) | 7	3000 | LARGE T&R	Yes	NIPDAU	Level-2-260C-1 YEAR	-40 to 125	861257

(1) **Status:** For more details on status, see our product life cycle.

(2) **Material type:** When designated, preproduction parts are prototypes/experimental devices, and are not yet approved or released for full production. Testing and final process, including without limitation quality assurance, reliability performance testing, and/or process qualification, may not yet be complete, and this item is subject to further changes or possible discontinuation. If available for ordering, purchases will be subject to an additional waiver at checkout, and are intended for early internal evaluation purposes only. These items are sold without warranties of any kind.

(3) **RoHS values:** Yes, No, RoHS Exempt. See the TI RoHS Statement for additional information and value definition.

(4) **Lead finish/Ball material:** Parts may have multiple material finish options. Finish options are separated by a vertical ruled line. Lead finish/Ball material values may wrap to two lines if the finish value exceeds the maximum column width.

(5) **MSL rating/Peak reflow:** The moisture sensitivity level ratings and peak solder (reflow) temperatures. In the event that a part has multiple moisture sensitivity ratings, only the lowest level per JEDEC standards is shown. Refer to the shipping label for the actual reflow temperature that will be used to mount the part to the printed circuit board.

(6) **Part marking:** There may be an additional marking, which relates to the logo, the lot trace code information, or the environmental category of the part.

Multiple part markings will be inside parentheses. Only one part marking contained in parentheses and separated by a "~" will appear on a part. If a line is indented then it is a continuation of the previous line and the two combined represent the entire part marking for that device.

Important Information and Disclaimer: The information provided on this page represents TI's knowledge and belief as of the date that it is provided. TI bases its knowledge and belief on information provided by third parties, and makes no representation or warranty as to the accuracy of such information. Efforts are underway to better integrate information from third parties. TI has taken and continues to take reasonable steps to provide representative and accurate information but may not have conducted destructive testing or chemical analysis on incoming materials and chemicals. TI and TI suppliers consider certain information to be proprietary, and thus CAS numbers and other limited information may not be available for release.

In no event shall TI's liability arising out of such information exceed the total purchase price of the TI part(s) at issue in this document sold by TI to Customer on an annual basis.

TAPE AND REEL INFORMATION

REEL DIMENSIONS

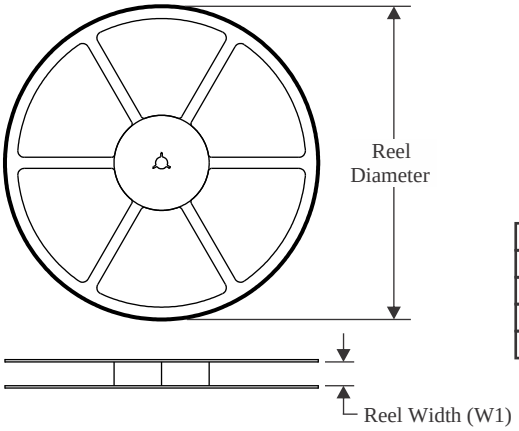

TAPE DIMENSIONS

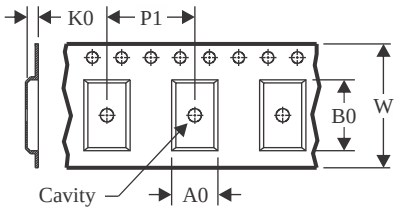

A0	Dimension designed to accommodate the component width
B0	Dimension designed to accommodate the component length
K0	Dimension designed to accommodate the component thickness
W	Overall width of the carrier tape
P1	Pitch between successive cavity centers

QUADRANT ASSIGNMENTS FOR PIN 1 ORIENTATION IN TAPE

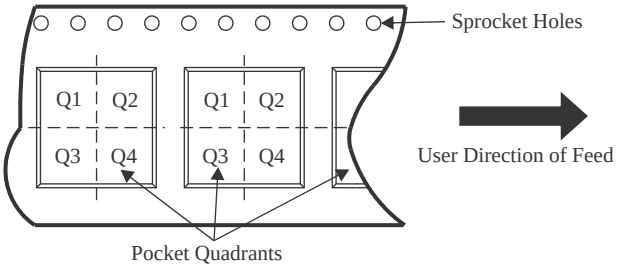

*All dimensions are nominal

Device	Package Type	Package Drawing	Pins	SPQ	Reel Diameter (mm)	Reel Width W1 (mm)	A0 (mm)	B0 (mm)	K0 (mm)	P1 (mm)	W (mm)	Pin1 Quadrant
TPSM861252RDXR	QFN-FCMOD	RDX	7	3000	330.0	12.4	3.6	4.3	2.3	8.0	12.0	Q1
TPSM861253RDXR	QFN-FCMOD	RDX	7	3000	330.0	12.4	3.6	4.3	2.3	8.0	12.0	Q1
TPSM861257RDXR	QFN-FCMOD	RDX	7	3000	330.0	12.4	3.6	4.3	2.3	8.0	12.0	Q1

TAPE AND REEL BOX DIMENSIONS

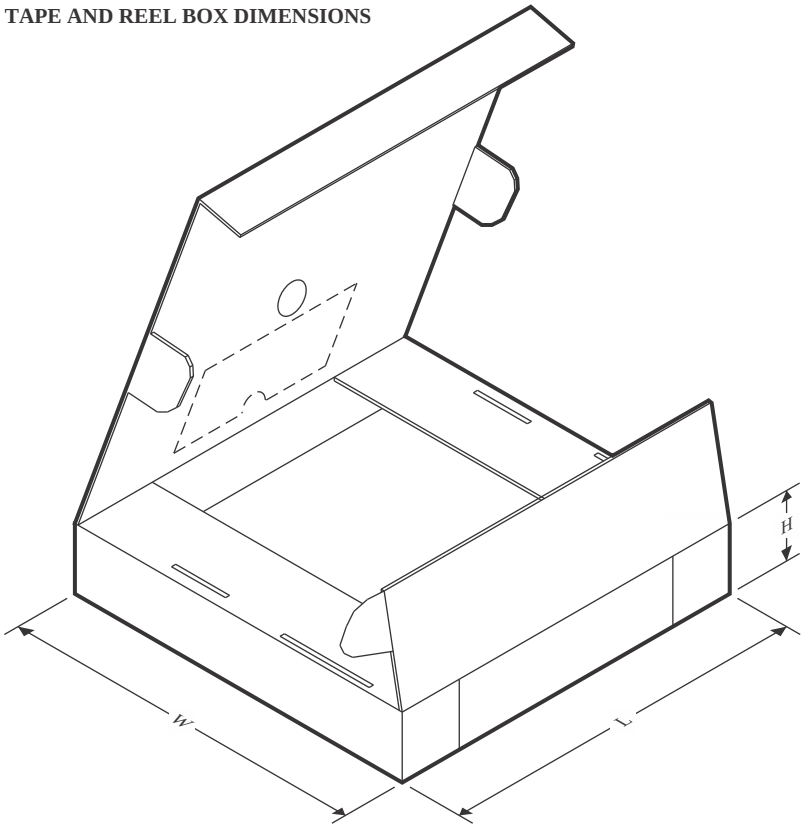

*All dimensions are nominal

Device	Package Type	Package Drawing	Pins	SPQ	Length (mm)	Width (mm)	Height (mm)
TPSM861252RDXR	QFN-FCMOD	RDX	7	3000	367.0	367.0	38.0
TPSM861253RDXR	QFN-FCMOD	RDX	7	3000	367.0	367.0	38.0
TPSM861257RDXR	QFN-FCMOD	RDX	7	3000	367.0	367.0	38.0

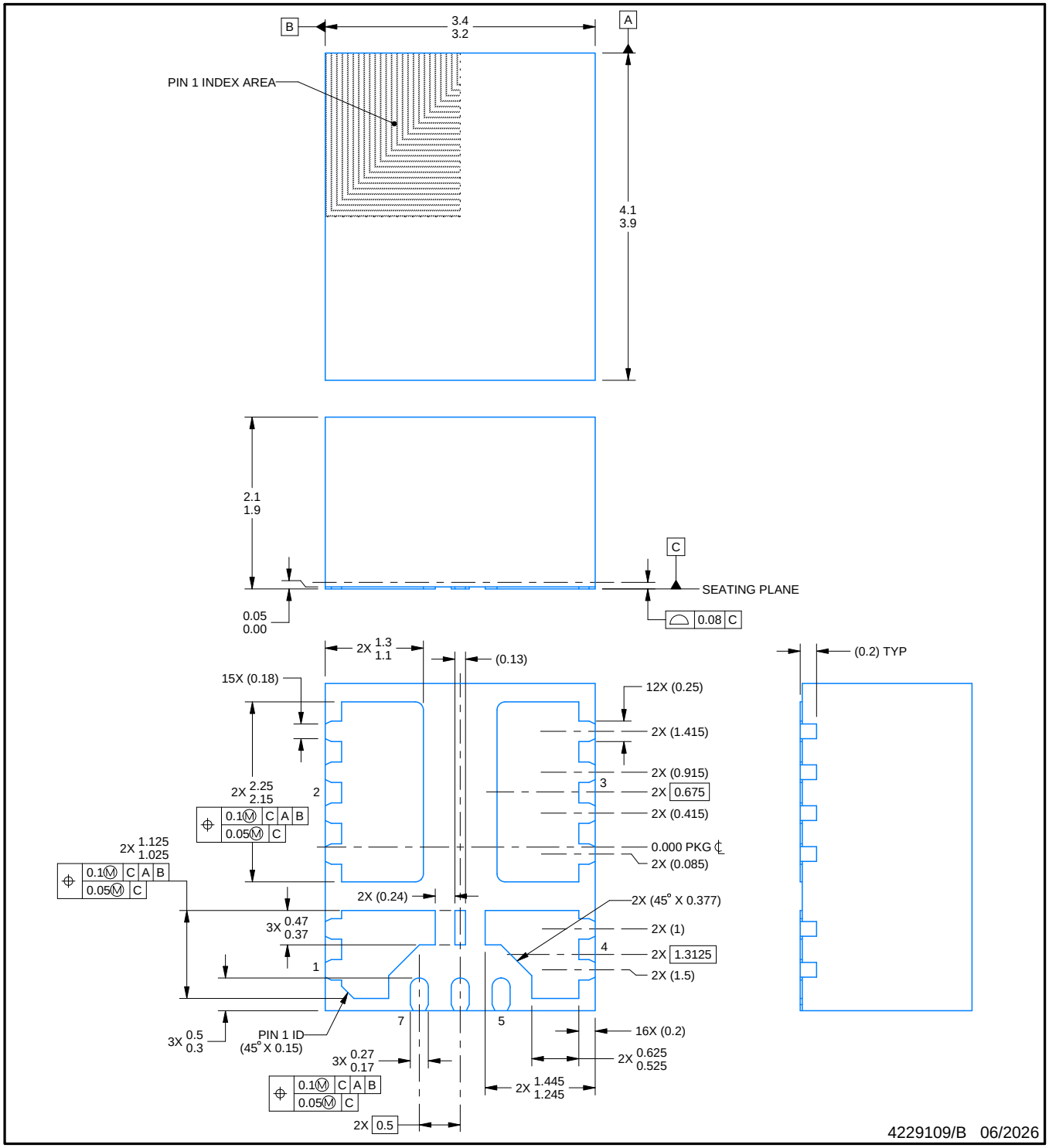

NOTES:

1. All linear dimensions are in millimeters. Any dimensions in parenthesis are for reference only. Dimensioning and tolerancing per ASME Y14.5M.
2. This drawing is subject to change without notice.

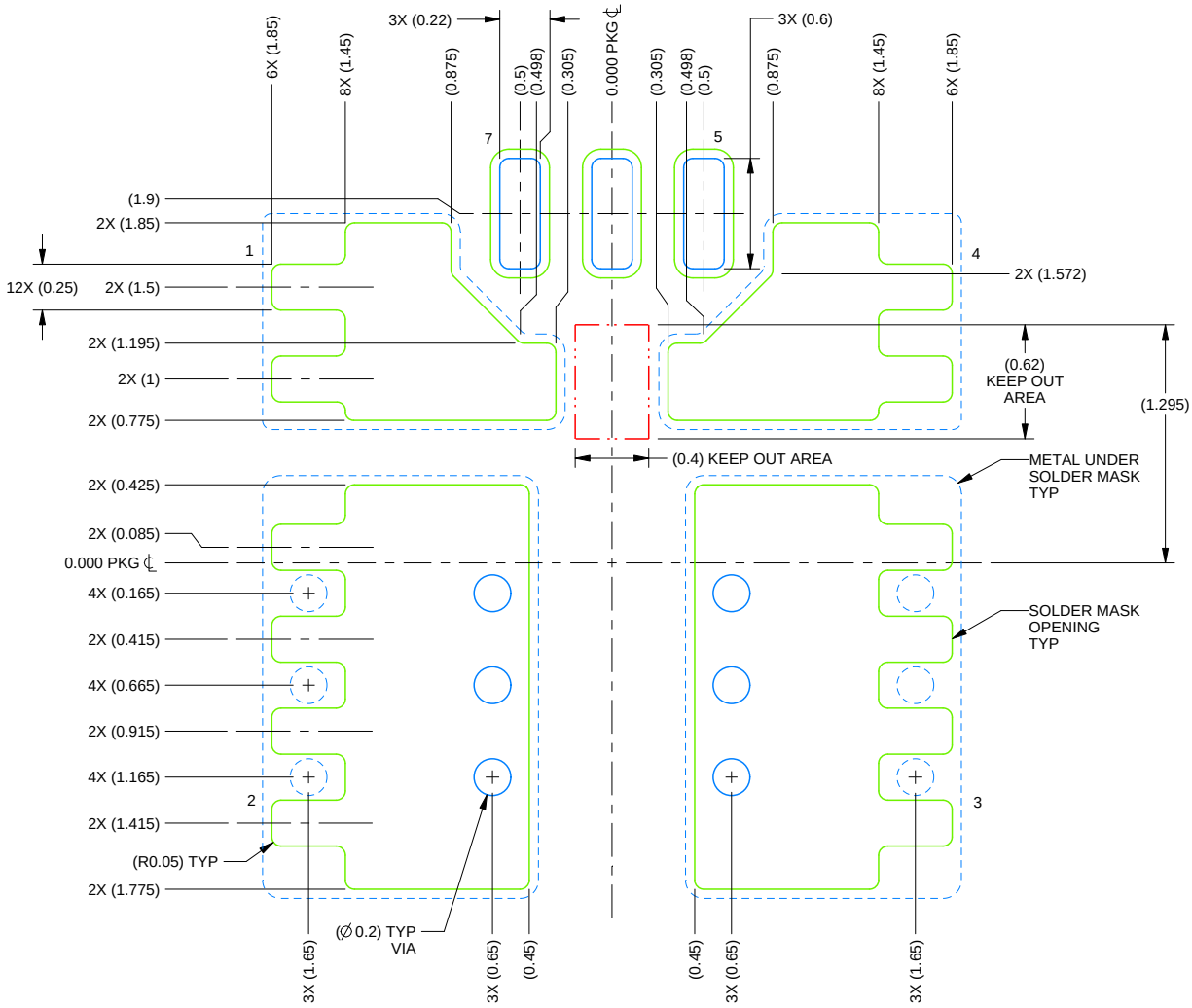

LAND PATTERN EXAMPLE
SCALE: 25X

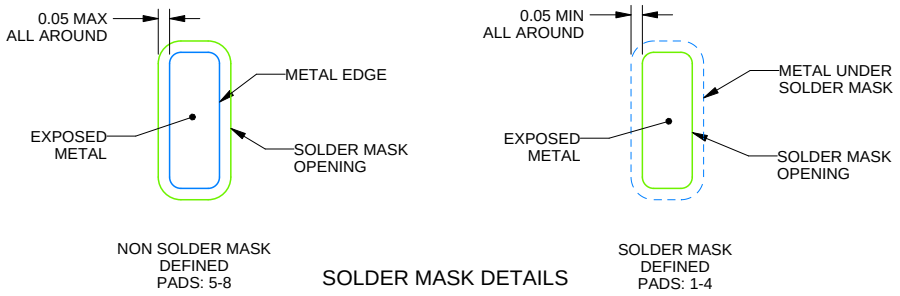

SOLDER MASK DETAILS

4229109/B 06/2026

NOTES: (continued)

4. This package is designed to be soldered to a thermal pad on the board. For more information, see Texas Instruments literature number SLUA271 (www.ti.com/lit/slua271).
5. Vias are optional depending on application, refer to device data sheet. If any vias are implemented, refer to their locations shown on this view. It is recommended that vias under paste be filled, plugged or tented.

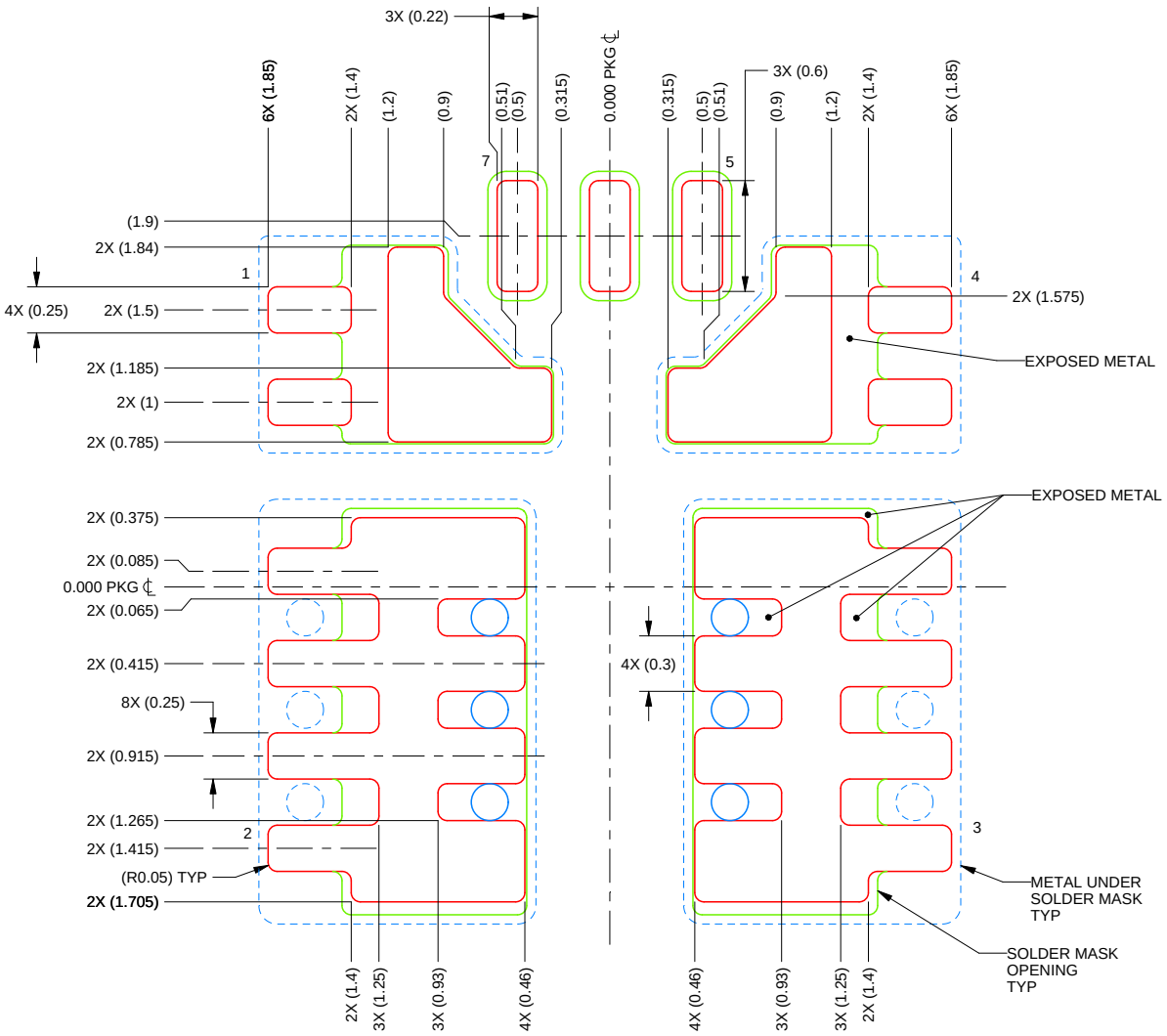

SOLDER PASTE EXAMPLE
BASED ON 0.125 mm THICK STENCIL
SCALE: 25X

PRINTED SOLDER COVERAGE BY AREA UNDER PACKAGE
PADS: 1, 2, 3 & 4: 75%

4229109/B 06/2026

NOTES: (continued)

6. Laser cutting apertures with trapezoidal walls and rounded corners may offer better paste release. IPC-7525 may have alternate design recommendations.

IMPORTANT NOTICE AND DISCLAIMER

TI PROVIDES TECHNICAL AND RELIABILITY DATA (INCLUDING DATASHEETS), DESIGN RESOURCES (INCLUDING REFERENCE DESIGNS), APPLICATION OR OTHER DESIGN ADVICE, WEB TOOLS, SAFETY INFORMATION, AND OTHER RESOURCES “AS IS” AND WITH ALL FAULTS, AND DISCLAIMS ALL WARRANTIES, EXPRESS AND IMPLIED, INCLUDING WITHOUT LIMITATION ANY IMPLIED WARRANTIES OF MERCHANTABILITY, FITNESS FOR A PARTICULAR PURPOSE OR NON-INFRINGEMENT OF THIRD PARTY INTELLECTUAL PROPERTY RIGHTS.

These resources are intended for skilled developers designing with TI products. You are solely responsible for (1) selecting the appropriate TI products for your application, (2) designing, validating and testing your application, and (3) ensuring your application meets applicable standards, and any other safety, security, regulatory or other requirements.

These resources are subject to change without notice. TI grants you permission to use these resources only for development of an application that uses the TI products described in the resource. Other reproduction and display of these resources is prohibited. No license is granted to any other TI intellectual property right or to any third party intellectual property right. TI disclaims responsibility for, and you fully indemnify TI and its representatives against any claims, damages, costs, losses, and liabilities arising out of your use of these resources.

TI’s products are provided subject to TI’s Terms of Sale, TI’s General Quality Guidelines, or other applicable terms available either on ti.com or provided in conjunction with such TI products. TI’s provision of these resources does not expand or otherwise alter TI’s applicable warranties or warranty disclaimers for TI products. Unless TI explicitly designates a product as custom or customer-specified, TI products are standard, catalog, general purpose devices.

TI objects to and rejects any additional or different terms you may propose.

Copyright © 2026, Texas Instruments Incorporated

Last updated 10/2025