BIAS POWER SUPPLY FOR TV AND MONITOR TFT LCD PANELS

Check for Samples: TPS65161, TPS65161A, TPS65161B

FEATURES

- **8-V to 14.7-V Input Voltage Range**
- **V_S Output Voltage Range up to 19 V**
- **TPS65161 has a 2.8-A Switch Current Limit**
- **TPS65161A has a 3.7-A Switch Current Limit**
- **TPS65161B has a 3.7-A Switch Current Limit and 100-mA Charge Pump Output Current**
- **1.5% Accurate 2.3-A Step-Down Converter**
- **500-kHz/750-kHz Fixed Switching Frequency**
- **Negative Charge Pump Driver for V_{GL}**
- **Positive Charge Pump Driver for V_{GH}**
- **Adjustable Sequencing for V_{GL}, V_{GH}**
- **Gate Drive Signal to Drive External MOSFET**
- **Internal and Adjustable Soft Start**
- **Short-Circuit Protection**
- **Overvoltage Protection**
- **Thermal Shutdown**
- **Available in HTSSOP-28 Package**

APPLICATIONS

- **TFT LCD Displays for Monitor and LCD TV**

DESCRIPTION

The TPS65161 family offers a compact power supply solution to provide all four voltages required by thin-film transistor (TFT) LCD panels. With their high current capabilities, the devices are ideal for large screen monitor panels and LCD TV applications.

TYPICAL APPLICATION

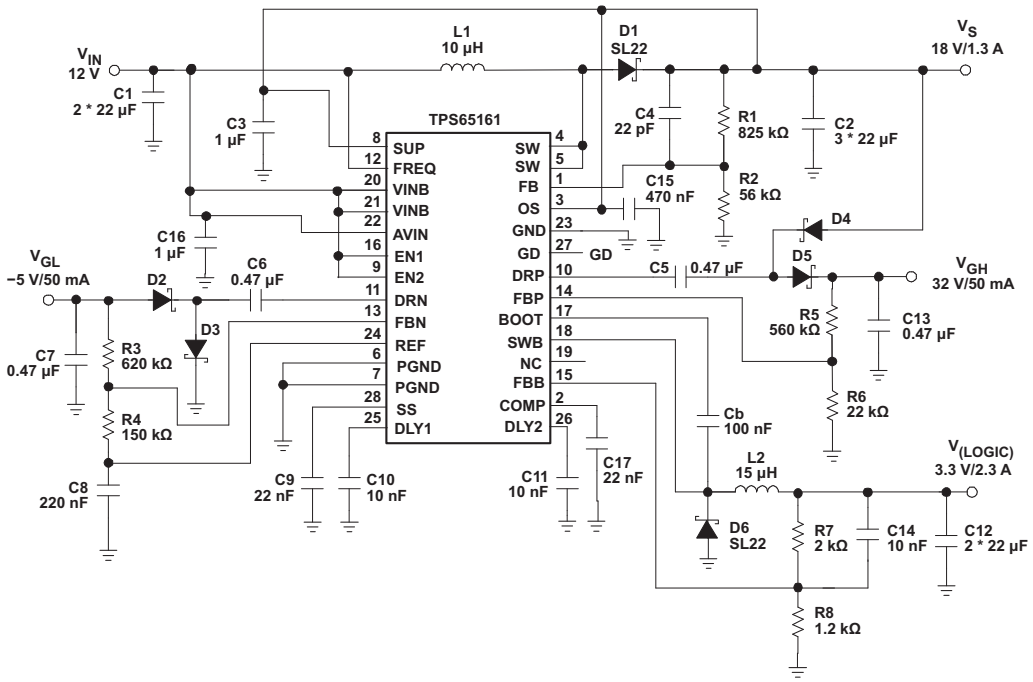

Please be aware that an important notice concerning availability, standard warranty, and use in critical applications of Texas Instruments semiconductor products and disclaimers thereto appears at the end of this data sheet.

PowerPAD is a trademark of Texas Instruments.

PRODUCTION DATA information is current as of publication date. Products conform to specifications per the terms of the Texas Instruments standard warranty. Production processing does not necessarily include testing of all parameters.

Copyright © 2006–2013, Texas Instruments Incorporated

This integrated circuit can be damaged by ESD. Texas Instruments recommends that all integrated circuits be handled with appropriate precautions. Failure to observe proper handling and installation procedures can cause damage.

ESD damage can range from subtle performance degradation to complete device failure. Precision integrated circuits may be more susceptible to damage because very small parametric changes could cause the device not to meet its published specifications.

DESCRIPTION (CONTINUED)

Compared to the TPS65160 and TPS65160A the TPS65161/A/B family of devices offer increased step-down converter output current. The TPS65161B also offers increased charge pump output current, and a higher undervoltage lockout threshold. The devices can be powered from a 12-V input supply and generate the four main supply voltages required by TFT LCD display panels.

Each device comprises a boost converter to generate the source voltage V_S, a step-down converter to generate the logic supply $V_{(LOGIC)}$, and regulated positive and negative charge pumps to generate the TFT bias voltages V_{GH} and V_{GL}. Both switching converters and both charge pumps operate from a central clock that can be set to either 750-kHz or 500-kHz by tying the FREQ pin high or low.

The TPS65161/A/B devices feature adjustable power supply sequencing, plus a number of safety features such as boost converter overvoltage protection, buck converter short-circuit protection, and thermal shutdown. The devices also incorporate a gate drive signal to control an external MOSFET isolation switch connected in series with V_S or V_{GH} (see the application section at the end of this data sheet for more information).

ORDERING INFORMATION (1)

T_A	BOOST SWITCH CURRENT LIMIT I_{LIM}(min)	CHARGE PUMP CURRENT LIMIT (2)	UVLO THRESHOLD	ORDERING	PACKAGE(3)	PACKAGE MARKING
–40°C to 85°C	2.8A	100mA	6V	TPS65161PWP	HTSSOP28 (PWP)	TPS65161
	3.7A	100mA	6V	TPS65161APWP	HTSSOP28 (PWP)	TPS65161A
	3.7A	200mA	8V	TPS65161BPWP	HTSSOP28 (PWP)	TPS65161B

(1) For the most current package and ordering information, see the Package Option Addendum at the end of this document, or see the TI Web site at www.ti.com.
(2) Because of the charge pumps' 50% duty cycle, the maximum current available from V_{GH} and V_{GL} in typical applications is equal to approximately half the charge pump current limit.
(3) The PWP package is available taped and reeled. Add R-suffix to the device type (TPS65161PWPR) to order the device taped and reeled. The TPS65161PWPR package has quantities of 2000 devices per reel. Without suffix, the TPS65161PWP is shipped in tubes with 50 devices per tube.

ABSOLUTE MAXIMUM RATINGS

over operating free-air temperature range (unless otherwise noted)(1)

		UNIT
	Voltages on pin VIN(2)	–0.3 V to 16.5 V
	Voltages on pin EN1, EN2, FREQ(2)	–0.3 V to 16.5 V
	Voltage on pin SW (2)	25 V
	Voltage on pin SWB(2)	20 V
	Voltages on pin OS, SUP, GD(2)	25 V
	Continuous power dissipation	See Dissipation Rating Table
T_A	Operating junction temperature	–40°C to 150°C
T_{stg}	Storage temperature range	–65°C to 150°C

(1) Stresses beyond those listed under *absolute maximum ratings* may cause permanent damage to the device. These are stress ratings only, and functional operation of the device at these or any other conditions beyond those indicated under *recommended operating conditions* is not implied. Exposure to absolute-maximum-rated conditions for extended periods may affect device reliability.
(2) All voltage values are with respect to network ground terminal.

Copyright © 2006–2013, Texas Instruments Incorporated

DISSIPATION RATINGS

PACKAGE	RTH_{JA}	$T_A \leq 25°C$ POWER RATING	$T_A = 70°C$ POWER RATING	$T_A = 85°C$ POWER RATING
28-Pin HTSSOP	28°C/W (PowerPAD[1] soldered)	3.57 W	1.96 W	1.42 W

(1) See Texas Instruments application report SLMA002 regarding thermal characteristics of the PowerPAD package.

RECOMMENDED OPERATING CONDITIONS

over operating free-air temperature range (unless otherwise noted)

		MIN	NOM	MAX	UNIT
V_S	Output voltage range of the main boost converter[1]			19	V
C_{IN}	Input capacitor at VINB		2×22		µF
	Input capacitor AVIN		1		µF
L	Inductor boost converter[2]		10		µH
	Inductor buck converter[2]		15		
$V_{(LOGIC)}$	Output voltage range of the step-down converter $V_{(LOGIC)}$	1.8		5.0	V
C_O	Output capacitor boost converter		3×22		µF
	Output capacitor buck converter		2×22		
T_A	Operating ambient temperature	–40		85	°C
T_J	Operating junction temperature	–40		125	°C

(1) The maximum output voltage is limited by the overvoltage protection threshold and not be the maximum switch voltage rating.
(2) See application section for further information.

ELECTRICAL CHARACTERISTICS

V_{IN} = 12 V, SUP = V_{IN}, EN1 = EN2 = V_{IN}, V_S = 15 V, $V_{(LOGIC)}$ = 3.3 V, T_A = –40°C to 85°C, typical values are at T_A = 25°C (unless otherwise noted)

PARAMETER		TEST CONDITIONS	MIN	TYP	MAX	UNIT
SUPPLY CURRENT						
V_{IN}	Input voltage range		8		14.7	V
I_Q	Quiescent current into AVIN	$V_{GH} = 2 \times V_S$, Boost converter not switching		0.2	2	mA
	Quiescent current into VINB	$V_{GH} = 2 \times V_S$, Buck converter not switching		0.2	0.5	
I_{SD}	Shutdown current into AVIN	EN1 = EN2 = GND		0.1	2	µA
	Shutdown current into VINB	EN1 = EN2 = GND		0.1	2	
$I_{(SUP)}$	Shutdown current into SUP	EN1 = EN2 = GND		0.1	4	µA
	Quiescent current into SUP	$V_{GH} = 2 \times V_S$		0.2	2	mA
V_{UVLO}	Undervoltage lockout threshold	TPS65161, TPS65161A; V_{IN} falling.		6	6.4	V
		TPS65161B; V_{IN} falling.		8	8.8	
V_{ref}	Reference voltage		1.203	1.213	1.223	V
	Thermal shutdown	Temperature rising		155		°C
	Thermal shutdown hysteresis			5		°C
LOGIC SIGNALS EN1, EN2, FREQ						
V_{IH}	High-level input voltage EN1, EN2		2.0			V
V_{IL}	Low-level input voltage EN1, EN2				0.8	V
V_{IH}	High-level input voltage FREQ		1.7			V
V_{IL}	Low-level input voltage FREQ				0.4	V
I_{lkg}	Input leakage current	EN1 = EN2 = FREQ = GND or V_{IN}		0.01	0.1	µA

Copyright © 2006–2013, Texas Instruments Incorporated

ELECTRICAL CHARACTERISTICS (continued)

V_{IN} = 12 V, SUP = V_{IN}, EN1 = EN2 = V_{IN}, V_S = 15 V, $V_{(LOGIC)}$ = 3.3 V, T_A = –40°C to 85°C, typical values are at T_A = 25°C (unless otherwise noted)

PARAMETER		TEST CONDITIONS	MIN	TYP	MAX	UNIT
CONTROL AND SOFT START DLY1, DLY2, SS						
$I_{(DLY1)}$	Delay1 charge current	$V_{(THRESHOLD)}$ = 1.213 V	3.3	4.8	6.2	µA
$I_{(DLY2)}$	Delay2 charge current		3.3	4.8	6.2	µA
I_{SS}	SS charge current		6	9	12	µA
INTERNAL OSCILLATOR						
f_{OSC}	Oscillator frequency	FREQ = high	600	750	900	kHz
		FREQ = low	400	500	600	
BOOST CONVERTER (V_S)						
V_S	Output voltage range(1)				19	V
$V_{(FB)}$	Feedback regulation voltage		1.136	1.146	1.156	V
$I_{(FB)}$	Feedback input bias current			10	100	nA
$r_{DS(on)}$	N-MOSFET on-resistance (Q1)	$I_{(SW)}$ = 500 mA		100	185	mΩ
	P-MOSFET on-resistance (Q2)	$I_{(SW)}$ = 200 mA		10	16	Ω
I_{MAX}	Maximum P-MOSFET peak switch current				1	A
I_{LIM}	N-MOSFET switch current limit (Q1)	TPS65161	2.8	3.5	4.2	A
I_{LIM}	N-MOSFET switch current limit (Q1)	TPS65161A	3.7	4.6	5.5	A
I_{lkg}	Switch leakage current	$V_{(SW)}$ = 15 V		1	10	µA
OVP	Overvoltage protection	V_{OUT} rising	19.5	20	21	V
	Line regulation	10.6 V ≤ V_{IN} ≤ 11.6 V at 1 mA		0.0008		%/V
	Load regulation			0.03		%/A
GATE DRIVE (GD)						
$V_{(GD)}$	Gate drive threshold(2)	$V_{(FB)}$ rising	V_S-12%	V_S-8%	V_S-4%	V
V_{OL}	GD output low voltage	$I_{(sink)}$ = 500 µA			0.3	V
	GD output leakage current	$V_{(GD)}$ = 20 V		0.05	1	µA
STEP-DOWN CONVERTER ($V_{(LOGIC)}$)						
$V_{(LOGIC)}$	Output voltage range		1.8		5	V
$V_{(FBB)}$	Feedback regulation voltage		1.195	1.213	1.231	V
$I_{(FBB)}$	Feedback input bias current			10	100	nA
$r_{DS(on)}$	N-MOSFET on-resistance (Q5)	$I_{(SW)}$ = 500 mA		175	300	mΩ
I_{LIM}	N-MOSFET switch current limit (Q5)		2.5	3.2	3.9	A
I_{lkg}	Switch leakage current	$V_{(SW)}$ = 0 V		1	10	µA
	Line regulation	10.6 V ≤ V_{IN} ≤ 11.6 V at 1 mA		0.0018		%/V
	Load regulation			0.037		%/A

(1) The maximum output voltage is limited by the overvoltage protection threshold and not be the maximum switch voltage rating.
(2) The GD signal is latched low when the main boost converter output V_S is within regulation. The GD signal is reset when the input voltage or enable of the boost converter is cycled low.

Copyright © 2006–2013, Texas Instruments Incorporated

ELECTRICAL CHARACTERISTICS (continued)

V_{IN} = 12 V, SUP = V_{IN}, EN1 = EN2 = V_{IN}, V_S = 15 V, $V_{(LOGIC)}$ = 3.3 V, T_A = –40°C to 85°C, typical values are at T_A = 25°C (unless otherwise noted)

PARAMETER		TEST CONDITIONS		MIN	TYP	MAX	UNIT
NEGATIVE CHARGE-PUMP VGL							
V_O	Output voltage range					–2	V
$V_{(FBN)}$	Feedback regulation voltage			–36	0	36	mV
$I_{(FBN)}$	Feedback input bias current				10	100	nA
$r_{DS(on)}$	Q4 P-Channel switch $r_{DS(on)}$	TPS65161, TPS65161A; I_{OUT} = 20 mA			4.4		Ω
		TPS65161B; I_{OUT} = 20 mA			3.7		
$V_{(DropN)}$	Current sink voltage drop (3)	TPS65161, TPS65161A	$I_{(DRN)}$ = 50 mA, $V_{(FBN)}$ = $V_{(FBN)}$nominal –5%		0.13	0.19	V
			$I_{(DRN)}$ = 100 mA, $V_{(FBN)}$ = $V_{(FBN)}$nominal –5%		0.27	0.42	
		TPS65161B	$I_{(DRN)}$ = 100 mA, $V_{(FBN)}$ = $V_{(FBN)}$nominal –5%		0.24	0.42	
			$I_{(DRN)}$ = 200 mA, $V_{(FBN)}$ = $V_{(FBN)}$nominal –5%		0.52	0.90	
POSITIVE CHARGE-PUMP OUTPUT VGH							
$V_{(FBP)}$	Feedback regulation voltage			1.187	1.213	1.238	V
$I_{(FBP)}$	Feedback input bias current				10	100	nA
$r_{DS(on)}$	Q3 N-Channel switch $r_{DS(on)}$	I_{OUT} = 20 mA			1.1		Ω
$V_{(DropP)}$	Current source voltage drop ($V_{(SUP)}$ – $V_{(DRP)}$) (4)	TPS65161, TPS65161A	$I_{(DRP)}$ = 50 mA, $V_{(FBP)}$ = $V_{(FBP)}$nominal –5%		0.40	0.68	V
			$I_{(DRP)}$ = 100 mA, $V_{(FBP)}$ = $V_{(FBP)}$nominal –5%		0.85	1.60	
		TPS65161B	$I_{(DRP)}$ = 100 mA, $V_{(FBP)}$ = $V_{(FBP)}$nominal –5%		0.63	1.60	
			$I_{(DRP)}$ = 200 mA, $V_{(FBP)}$ = $V_{(FBP)}$nominal –5%		1.40	3.20	

(3) The maximum charge-pump output current is typically half the drive current of the internal current source or current sink.
(4) The maximum charge-pump output current is typically half the drive current of the internal current source or current sink.

Copyright © 2006–2013, Texas Instruments Incorporated

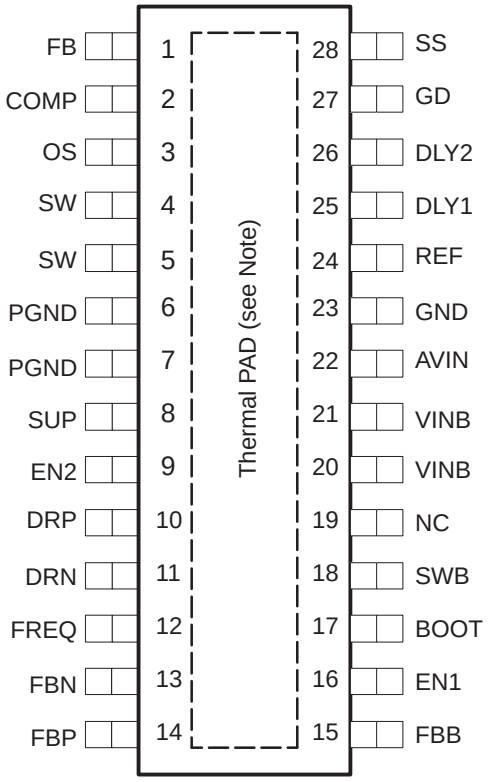

NOTE: The thermally enhanced PowerPAD™ is connected to PGND.

Copyright © 2006–2013, Texas Instruments Incorporated

PIN FUNCTIONS

PIN		I/O	DESCRIPTION
NAME	NO.		
SUP	8	I	This is the supply pin of the positive charge pump driver and can be connected to the input supply V_{IN} or the output of the main boost converter V_S. This depends mainly on the desired output voltage V_{GH} and numbers of charge pump stages.
FREQ	12	I	Frequency adjust pin. This pin allows setting the switching frequency with a logic level to 500 kHz = low and 750 kHz = high.
AVIN	22	I	Analog input voltage of the device. This is the input for the analog circuits of the device and should be bypassed with a 1-µF ceramic capacitor for good filtering.
VINB	20, 21	I	Power input voltage pin for the buck converter.
EN1	16	I	This is the enable pin of the buck converter and negative charge pump. When this pin is pulled high, the buck converter starts up, and after a delay time set by DLY1, the negative charge pump comes up. This pin must be terminated and not be left floating. A logic high enables the device and a logic low shuts down the device.
EN2	9	I	The boost converter starts only with EN1 = high, after the step-down converter is enabled. EN2 is the enable pin of the boost converter and positive charge pump. When this pin is pulled high, the boost converter and positive charge pump starts up after the buck converter is within regulation and a delay time set by DLY2 has passed by. This pin must be terminated and not be left floating. A logic high enables the device and a logic low shuts down the device.
DRN	11	O	Drive pin of the negative charge pump.
FBN	13	I	Feedback pin of negative charge pump.
REF	24	O	Internal reference output typically 1.213 V. A 220-nF capacitor needs to be connected to this pin.
PGND	6, 7		Power ground
SS	28	O	This pin allows setting the soft-start time for the main boost converter V_S. Typically a 22-nF capacitor needs to be connected to this pin to set the soft-start time.
DLY1	25	O	Connecting a capacitor from this pin to GND allows the setting of the delay time between $V_{(LOGIC)}$ (step-down converter output high) to V_{GL} during start-up.
DLY2	26	O	Connecting a capacitor from this pin to GND allows the setting of the delay time between $V_{(LOGIC)}$ (step-down converter output high) to V_S boost converter and positive charge-pump V_{GH} during start-up.
COMP	2		This is the compensation pin for the main boost converter. A small capacitor and, if required, a resistor is connected to this pin.
FBB	15	I	Feedback pin of the buck converter
SWB	18	O	Switch pin of the buck converter
NC	19		Not connected
BOOT	17	I	N-channel MOSFET gate drive voltage for the buck converter. Connect a capacitor from the switch node SWB to this pin.
FBP	14	I	Feedback pin of positive charge pump.
DRP	10	O	Drive pin of the positive charge pump.
GD	27		This is the gate drive pin which can be used to control an external MOSFET switch to provide input to output isolation of V_S or V_{GH}. See the circuit diagrams at the end of this data sheet. GD is an open-drain output and is latched low as soon as the boost converter is within 8% of its nominal regulated output voltage. GD goes high impedance when the EN2 input voltage is cycled low.
GND	23		Analog ground
OS	3	I	Output sense pin. The OS pin is connected to the internal rectifier switch and overvoltage protection comparator. This pin needs to be connected to the output of the boost converter and cannot be connected to any other voltage rail. Connect a 470-nF capacitor from OS pin to GND to avoid noise coupling into this pin. The PCB trace of the OS pin needs to be wide because it conducts high current.
FB	1	I	Feedback of the main boost converter generating Vsource (V_S).
SW	4, 5	I	Switch pin of the boost converter generating Vsource (V_S).
PowerPAD™			The PowerPAD needs to be connected and soldered to power ground (PGND).

Copyright © 2006–2013, Texas Instruments Incorporated

TABLE OF GRAPHS

			FIGURE
MAIN BOOST CONVERTER (Vs)			
η	Efficiency main boost converter V_S	vs Load current V_S = 15 V, V_{IN} = 12 V	1
$r_{DS(ON)}$	N-channel main switch Q1	vs Input voltage and temperature	2
	Soft-start boost converter	C_{SS} = 22 nF	3
	PWM operation at full-load current		4
	PWM operation at light-load current		5
	Load transient response		6
STEP-DOWN CONVERTER ($V_{(LOGIC)}$)			
η	Efficiency main boost converter V_S	vs Load current $V_{(LOGIC)}$ = 3.3 V, V_{IN} = 12 V	7
$r_{DS(ON)}$	N-channel main switch Q5		8
	PWM operation - continuous mode		9
	PWM operation - discontinuous mode		10
	Soft start		11
	Load transient response		12
SYSTEM PERFORMANCE			
f_{osc}	Oscillation frequency	vs Input voltage and temperature	13
	Power-up sequencing	EN2 connected to V_{IN}	14
	Power-up sequencing	EN2 enabled separately	15

TYPICAL CHARACTERISTICS

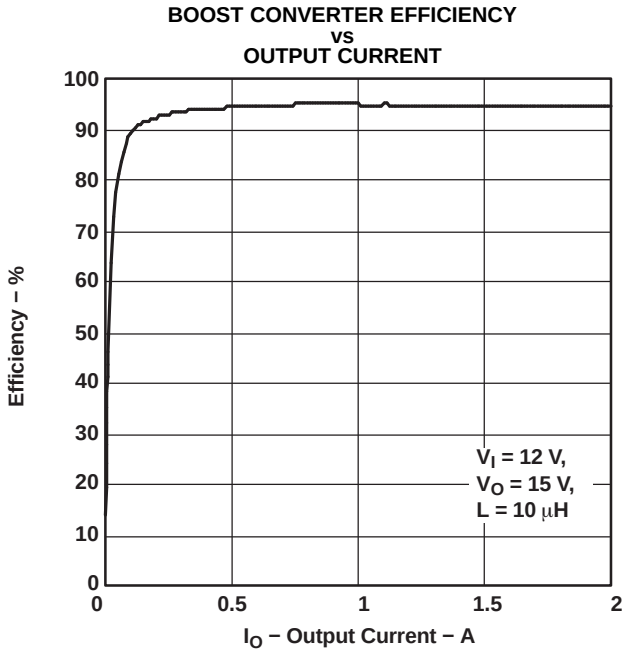

Figure 1.

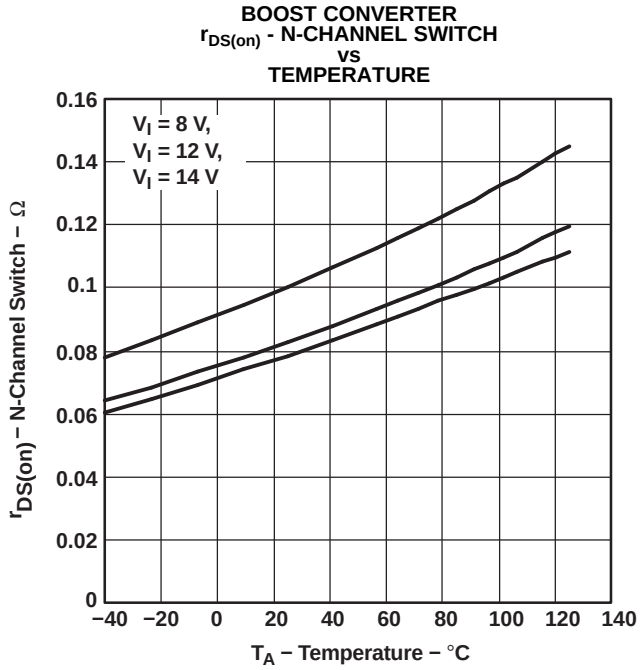

Figure 2.

Copyright © 2006–2013, Texas Instruments Incorporated

TYPICAL CHARACTERISTICS (continued)

SOFT-START BOOST CONVERTER

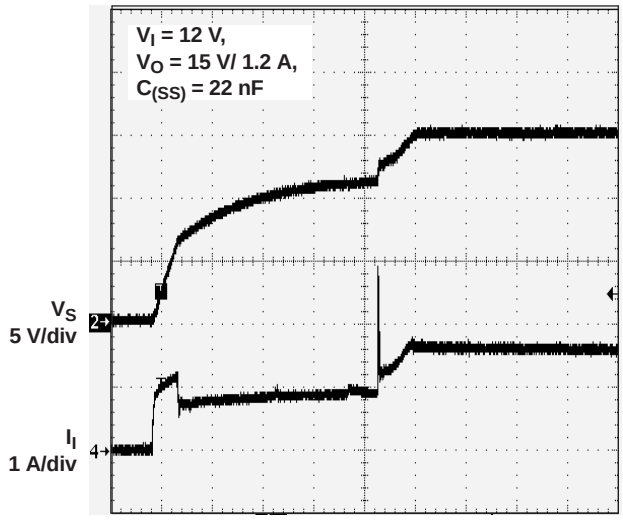

Figure 3.

PWM OPERATION BOOST CONVERTER CONTINUOUS MODE

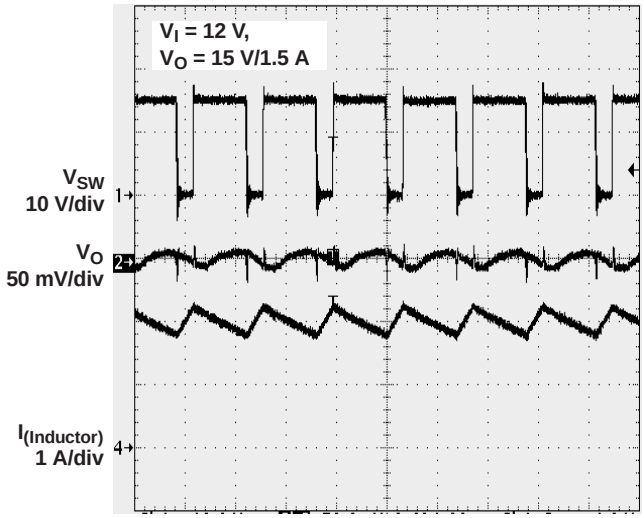

Figure 4.

PWM OPERATION BOOST CONVERTER CONTINUOUS MODE: LIGHT LOAD

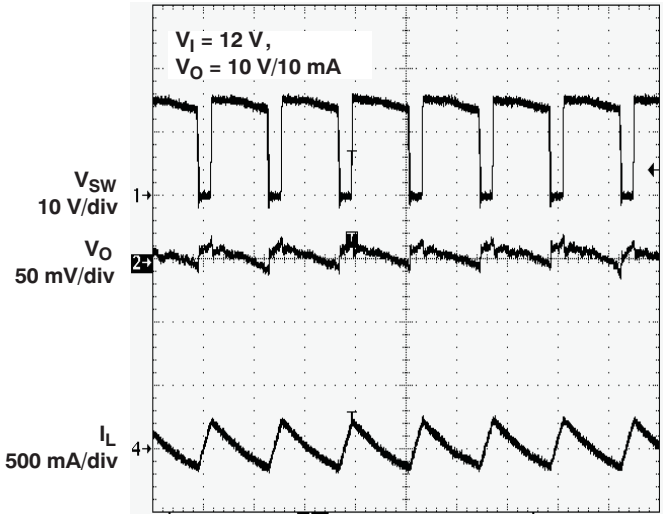

Figure 5.

LOAD TRANSIENT RESPONSE BOOST CONVERTER

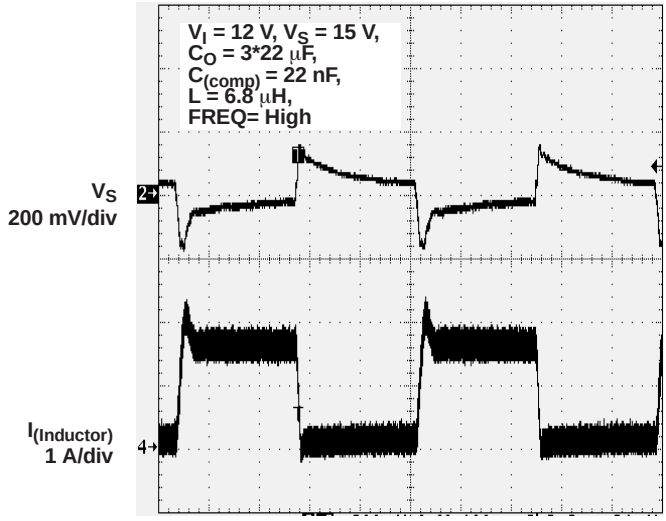

Figure 6.

TYPICAL CHARACTERISTICS (continued)

EFFICIENCY STEP-DOWN CONVERTER vs LOAD CURRENT

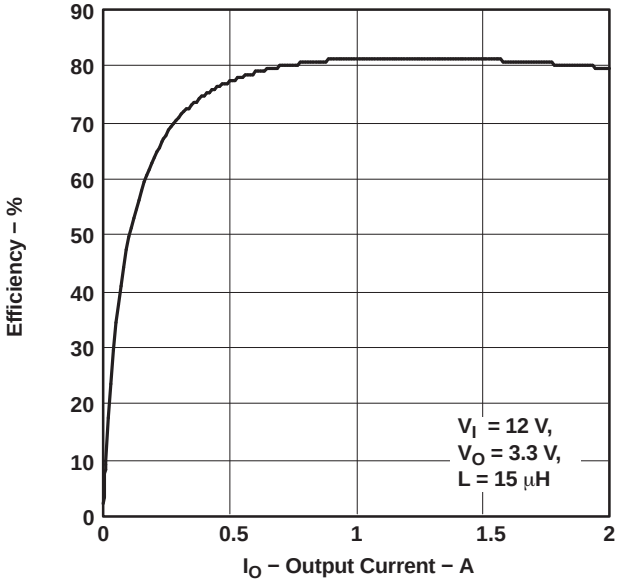

Figure 7.

STEP-DOWN CONVERTER $r_{DS(ON)}$ - N-CHANNEL SWITCH vs TEMPERATURE

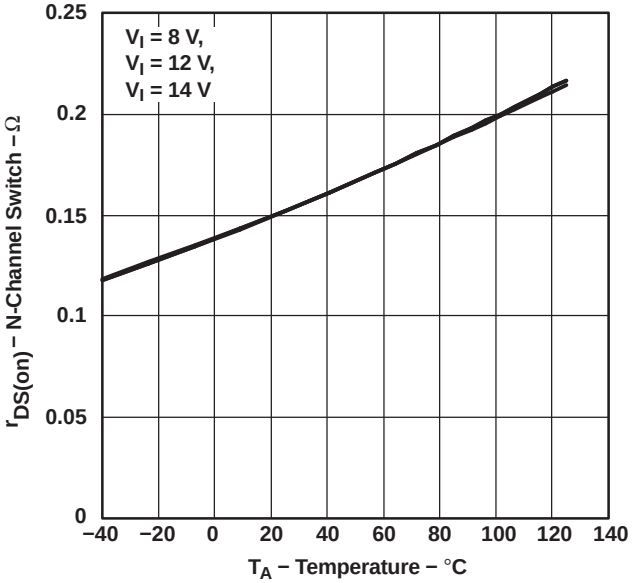

Figure 8.

STEP-DOWN CONVERTER PWM OPERATION CONTINUOUS MODE

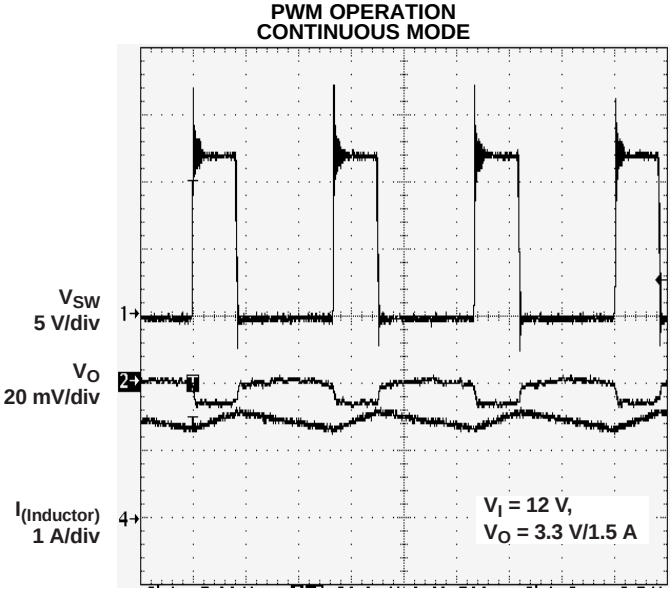

Figure 9.

STEP-DOWN CONVERTER PWM OPERATION DISCONTINUOUS MODE

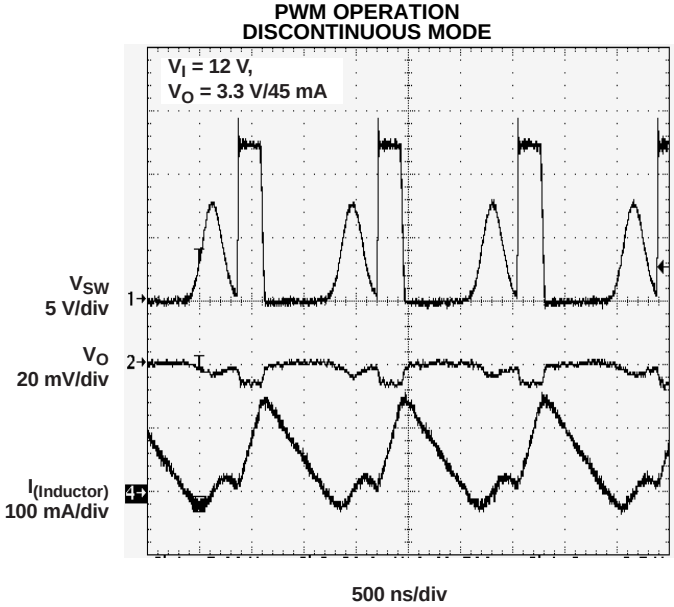

Figure 10.

Copyright © 2006–2013, Texas Instruments Incorporated

TYPICAL CHARACTERISTICS (continued)

SOFT-START STEP-DOWN CONVERTER

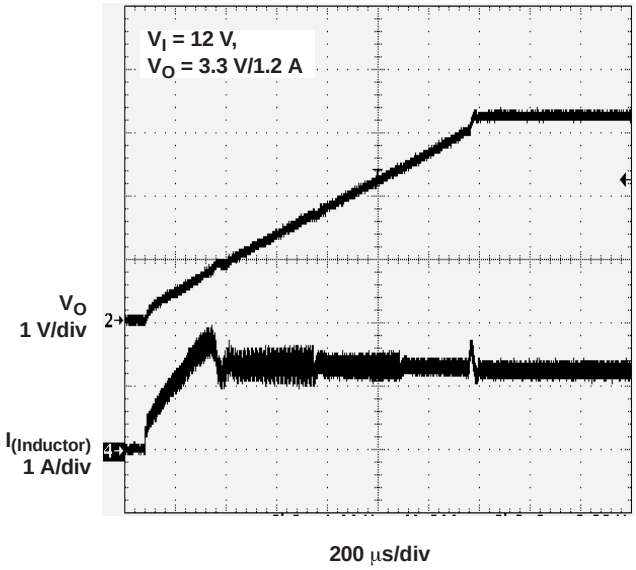

Figure 11.

LOAD TRANSIENT RESPONSE STEP-DOWN CONVERTER

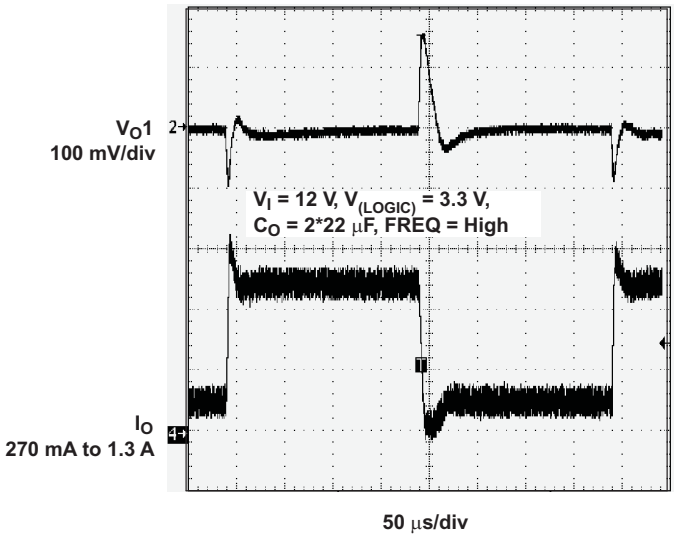

Figure 12.

SWITCHING FREQUENCY vs TEMPERATURE

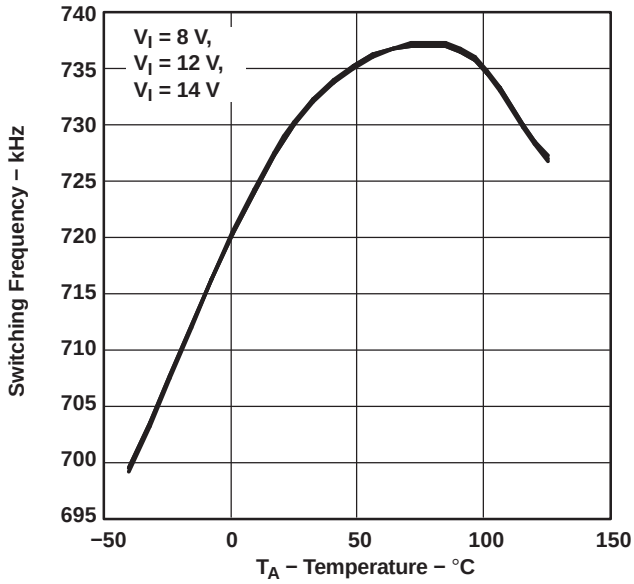

Figure 13.

POWER-UP SEQUENCING EN2 CONNECTED TO V_{IN}

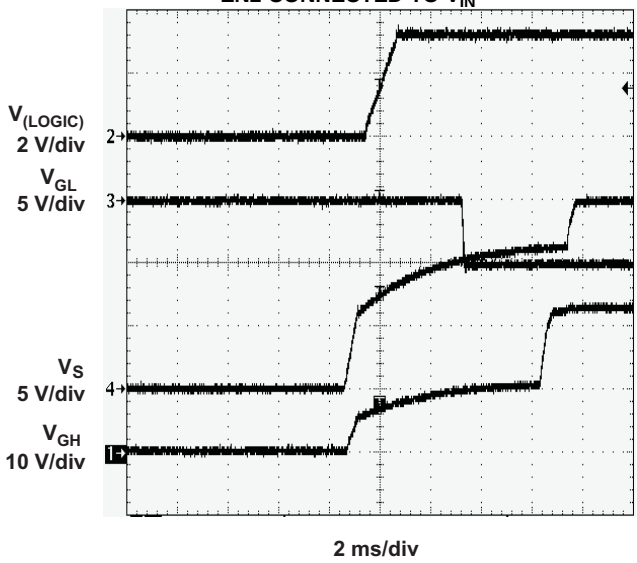

Figure 14.

TYPICAL CHARACTERISTICS (continued)

POWER-UP SEQUENCING
EN2 ENABLED SEPARATELY

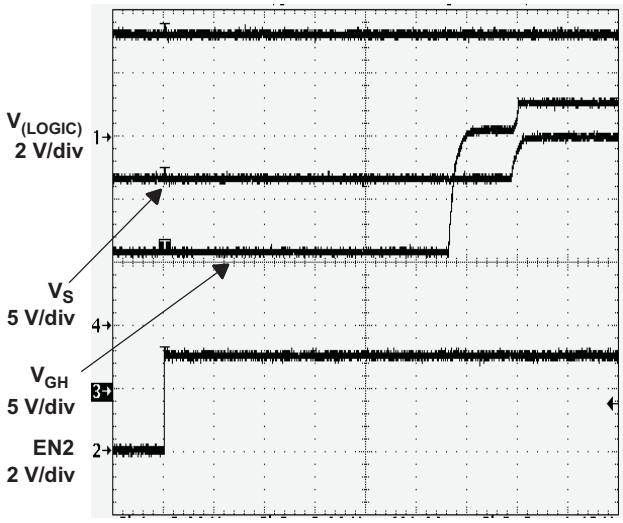

Figure 15.

Copyright © 2006–2013, Texas Instruments Incorporated

TYPICAL CHARACTERISTICS (continued)

FUNCTIONAL BLOCK DIAGRAM

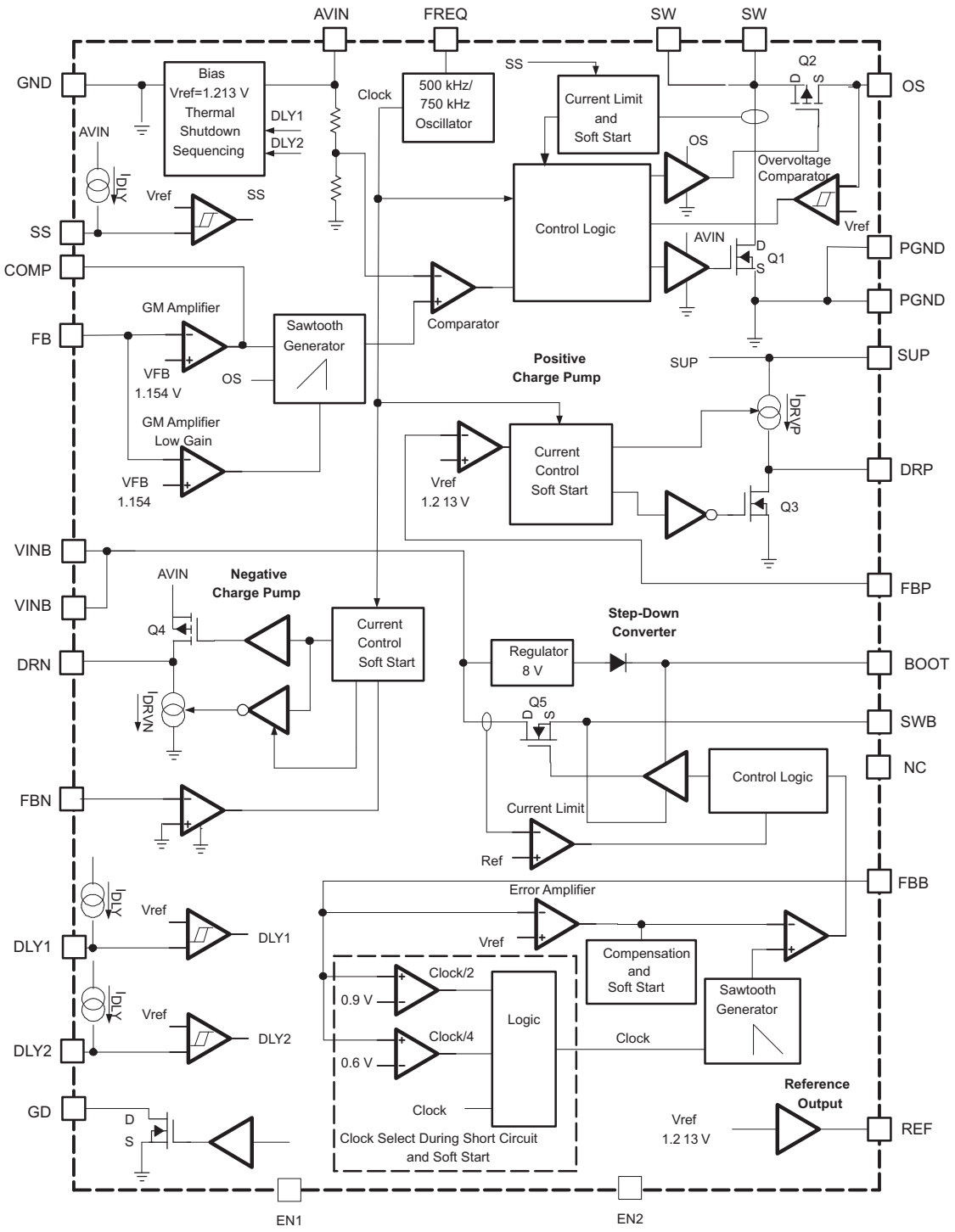

DETAILED DESCRIPTION

Boost Converter

The main boost converter operates in pulse-width modulation (PWM) and at a fixed switching frequency of 500 kHz or 750 kHz set by the FREQ pin. The converter uses an unique fast response, voltage-mode controller scheme with input voltage feedforward. This achieves excellent line and load regulation (0.03%-A load regulation typical) and allows the use of small external components. To add higher flexibility to the selection of external component values, the device uses external loop compensation. Although the boost converter looks like a nonsynchronous boost converter topology operating in discontinuous conduction mode at light load, the TPS65161 maintains continuous conduction even at light-load currents. This is achieved with a novel architecture using an external Schottky diode with an integrated MOSFET in parallel connected between SW and OS. See the Functional Block Diagram. The intention of this MOSFET is to allow the current to go negative that occurs at light-load conditions. For this purpose, a small integrated P-Channel MOSFET with typically 10-Ω $r_{DS(on)}$ is sufficient. When the inductor current is positive, the external Schottky diode with the lower forward voltage conducts the current. This causes the converter to operate with a fixed frequency in continuous conduction mode over the entire load current range. This avoids the ringing on the switch pin as seen with standard nonsynchronous boost converter and allows a simpler compensation for the boost converter.

Soft Start (Boost Converter)

The main boost converter has an adjustable soft start to prevent high inrush current during start-up. The soft-start time is set by the external capacitor connected to the SS pin. The capacitor connected to the SS pin is charged with a constant current that increases the voltage on the SS pin. The internal current limit is proportional to the voltage on the soft-start pin. When the threshold voltage of the internal soft-start comparator is reached, the full current limit is released. The larger the soft-start capacitor value, the longer the soft-start time.

Overvoltage Protection of the Boost Converter

The main boost converter has an overvoltage protection to protect the main switch Q2 at pin (SW) in case the feedback (FB) pin is floating or shorted to GND. In such an event, the output voltage rises and is monitored with the overvoltage protection comparator over the OS pin. See the functional block diagram. As soon as the comparator trips at typically 20 V, TPS65161, the boost converter turns the N-Channel MOSFET switch off. The output voltage falls below the overvoltage threshold and the converter continues to operate.

Frequency Select Pin (FREQ)

The frequency select pin (FREQ) allows setting the switching frequency of the entire device to 500 kHz (FREQ = low) or 750 kHz (FREQ = high). A lower switching frequency gives a higher efficiency with a slightly reduced load transient regulation.

Thermal Shutdown

A thermal shutdown is implemented to prevent damage caused by excessive heat and power dissipation. Typically, the thermal shutdown threshold is 155°C.

Step-Down Converter

The nonsynchronous step-down converter operates at a fixed switching frequency using a fast response voltage mode topology with input voltage feedforward. This topology allows simple internal compensation, and it is designed to operate with ceramic output capacitors. The converter drives an internal 3.2-A N-channel MOSFET switch. The MOSFET driver is referenced to the switch pin SWB. The N-channel MOSFET requires a gate drive voltage higher than the switch pin to turn the N-Channel MOSFET on. This is accomplished by a bootstrap gate drive circuit running of the step-down converter switch pin. When the switch pin SWB is at ground, the bootstrap capacitor is charged to 8 V. This way, the N-channel gate drive voltage is typically around 8 V.

Copyright © 2006–2013, Texas Instruments Incorporated

Soft Start (Step-Down Converter)

To avoid high inrush current during start-up, an internal soft start is implemented in the TPS65161. When the step-down converter is enabled over EN1, its reference voltage slowly rises from zero to its power-good threshold of typically 90% of V_{ref} . When the reference voltage reaches this power-good threshold, the error amplifier is released to its normal operation at its normal duty cycle. To further limit the inrush current during soft start, the converter frequency is set to 1/4th of the switching frequency f_s and then ½ of f_s determined by the comparator that monitors the feedback voltage. See the internal block diagram. Soft start is typically completed within 1 ms.

Short-Circuit Protection (Step-Down Converter)

To limit the short-circuit current, the device has a cycle-by-cycle current limit. To avoid the short-circuit current rising above the internal current limit when the output is shorted to GND, the switching frequency is reduced as well. This is implemented by two comparators monitoring the feedback voltage. The step-down converter switching frequency is reduced to ½ of f_s when the feedback is below 0.9 V and to 1/4th of the switching frequency when the feedback voltage is below 0.6 V.

Positive Charge Pump

The positive charge pump provides a regulated output voltage set by the external resistor divider. Figure 16 shows an extract of the positive charge-pump driver circuit. The operation of the charge-pump driver can be understood best with Figure 16. During the first cycle, Q3 is turned on and the flying capacitor C_{fly} charges to the source voltage, V_S. During the next clock cycle, Q3 is turned off and the current source charges the drive pin, DRP, up to the supply voltage, $V_{(SUP)}$. Because the flying capacitor voltage sits on top of the drive pin voltage, the maximum output voltage is $V_{(SUP)}$ +V_S. The SUP pin can be connected either to the input voltage V_{IN} of the TPS65161 or the output voltage of the main boost converter V_S.

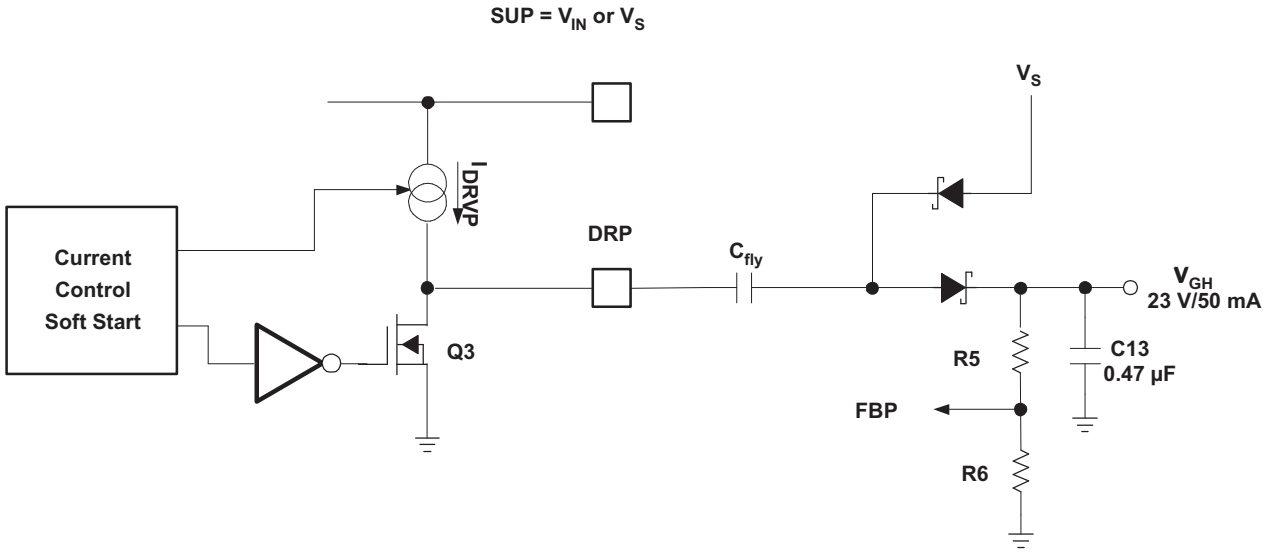

Figure 16. Extract of the Positive Charge-Pump Driver

If higher output voltages are required, another charge-pump stage can be added to the output.

Setting the output voltage:

$$V_{out} = 1.213 \times \left(1 + \frac{R5}{R6}\right)$$

$$R5 = R6 \times \left(\frac{V_{out}}{V_{FB}} - 1\right) = R6 \times \left(\frac{V_{out}}{1.213} - 1\right)$$

Negative Charge Pump

The negative charge pump provides a regulated output voltage set by the external resistor divider. The negative charge pump operates similar to the positive charge pump with the difference that it runs from the input voltage V_{IN}. The negative charge pump driver inverts the input voltage. The maximum negative output voltage is $V_{GL} = (-V_{IN}) + V_{drop}$. V_{drop} is the voltage drop across the external diodes and internal charge-pump MOSFETs. In case V_{GL} needs to be lower than $-V_{IN}$, an additional charge-pump stage needs to be added.

Setting the output voltage:

$$V_{out} = -V_{REF} \times \frac{R3}{R4} = -1.213\ V \times \frac{R3}{R4}$$

$$R3 = R4 \times \frac{|V_{out}|}{V_{REF}} = R4 \times \frac{|V_{out}|}{1.213}$$

The lower feedback resistor value, R4, should be in a range between 40 kΩ to 120 kΩ or the overall feedback resistance should be within 500 kΩ to 1 MΩ. Smaller values load the reference too heavily, and larger values may cause stability problems. The negative charge pump requires two external Schottky diodes. The peak current rating of the Schottky diode has to be twice the load current of the output. For a 20-mA output current, the dual-Schottky diode BAV99 is a good choice.

Power-On Sequencing (EN1, EN2, DLY1, DLY2)

The TPS65161 has an adjustable power-on sequencing set by the capacitors connected to DLY1 and DLY2 and controlled by EN1 and EN2. Pulling EN1 high enables the step-down converter and then the negative charge-pump driver. DLY1 sets the delay time between the step-down converter and negative charge-pump driver. EN2 enables the boost converter and positive charge-pump driver at the same time. DLY2 sets the delay time between the step-down converter $V_{(LOGIC)}$ and the boost converter V_S. This is especially useful to adjust the delay when EN2 is always connected to V_{IN}. If EN2 goes high after the step-down converter is already enabled, then the delay DLY2 starts when EN2 goes high. See Figure 17 and Figure 18.

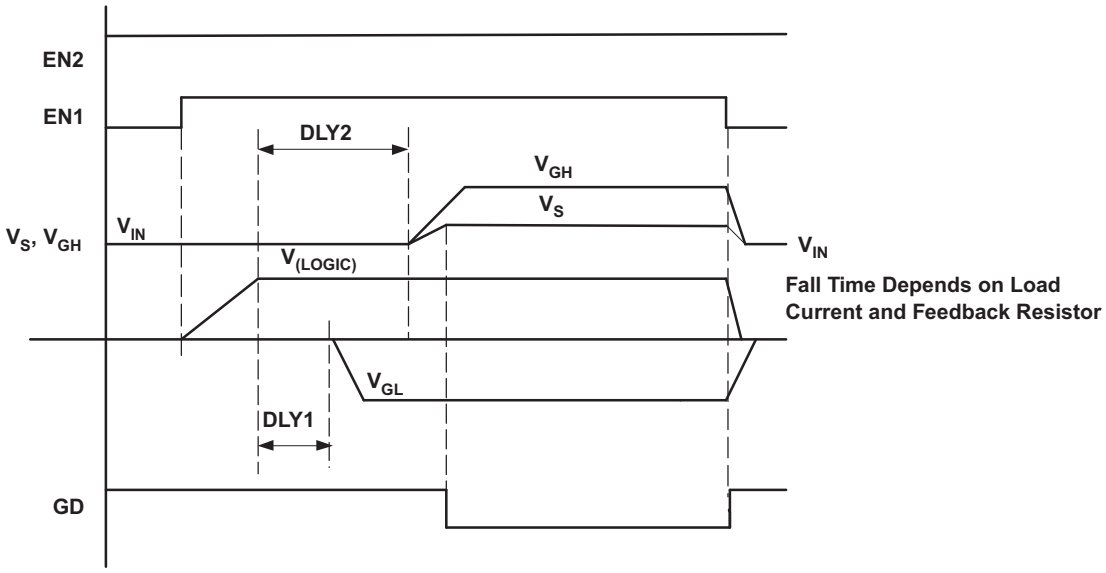

Figure 17. Power-On Sequencing With EN2 Always High (EN2 = V_{IN})

Copyright © 2006–2013, Texas Instruments Incorporated

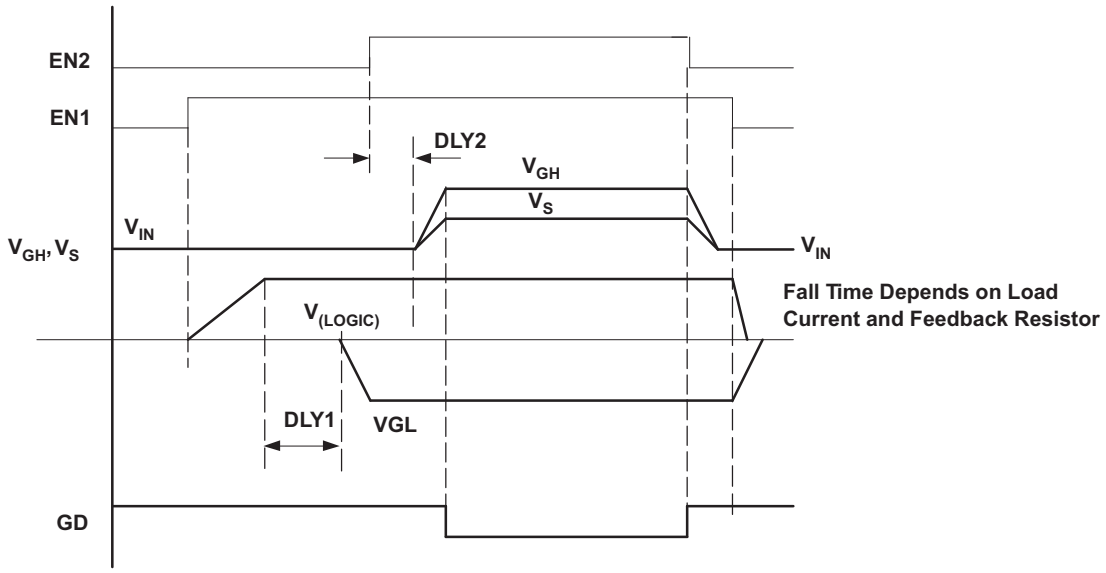

Figure 18. Power-On Sequencing Using EN1 and EN2

Setting the Delay Times DLY1, DLY2

Connecting an external capacitor to the DLY1 and DLY2 pins sets the delay time. If no delay time is required, these pins can be left open. To set the delay time, the external capacitor connected to DLY1 and DLY2 is charged with a constant current source of typically 4.8 µA. The delay time is terminated when the capacitor voltage has reached the internal reference voltage of V_{ref} = 1.213 V. The external delay capacitor is calculated:

$$C_{dly} = \frac{4.8\ \mu A \times td}{Vref} = \frac{4.8\ \mu A \times td}{1.213\ V} \quad \text{with td} = \text{Desired delay time}$$

Example for setting a delay time of 2.3 ms:

$$C_{dly} = = \frac{4.8\ \mu A \times 2.3\ ms}{1.213\ V} = 9.4\ nF \Rightarrow Cdly = 10\ nF$$

Gate Drive Pin (GD)

This is an open-drain output that goes low when the boost converter, V_S, is within regulation. The gate drive pin GD remains low until the input voltage or enable EN2 is cycled to ground.

Undervoltage Lockout

To avoid incorrect operation of the device at low input voltages, an undervoltage lockout is included which shuts down the device at voltages lower than 6 V.

Input Capacitor Selection

For good input voltage filtering, low ESR ceramic capacitors are recommended. The TPS65161 has an analog input, AVIN, and two input pins for the buck converter VINB. A 1-µF input capacitor should be connected directly from the AVIN to GND. Two 22-µF ceramic capacitors are connected in parallel from the buck converter input VINB to GND. For better input voltage filtering, the input capacitor values can be increased. See Table 1 and the Application Information section for input capacitor recommendations.

Copyright © 2006–2013, Texas Instruments Incorporated

Table 1. Input Capacitor Selection

CAPACITOR	VOLTAGE RATING	COMPONENT SUPPLIER	COMMENTS
22 µF/1210	16 V	Taiyo Yuden EMK325BY226MM	C_{IN} (VINB)
1 µF/1206	16 V	Taiyo Yuden EMK316BJ106KL	C_{IN} (AVIN)

Boost Converter Design Procedure

The first step in the design procedure is to verify whether the maximum possible output current of the boost converter supports the specific application requirements. A simple approach is to use the converter efficiency, by taking the efficiency numbers from the provided efficiency curves or to use a worst-case assumption for the expected efficiency, e.g., 80%.

1. Duty Cycle:

$$D = 1 - \frac{Vin \times \eta}{Vout}$$

2. Maximum output current: $I_{avg} = (1 - D) \times Isw = \frac{Vin}{Vout} \times 2.8\ A$ with Isw = minimum switch current of the TPS65161 (2.8 A).

3. Peak switch current:

$$I_{swpeak} = \frac{Vin \times D}{2 \times fs \times L} + \frac{I_{out}}{1 - D}$$

With

Isw = converter switch current (minimum switch current limit = 2.8 A)

fs = converter switching frequency (typical 500 kHz/750 kHz)

L = Selected inductor value

η = Estimated converter efficiency (use the number from the efficiency curves or 0.8 as an estimation)

The peak switch current is the steady-state peak switch current that the integrated switch, inductor, and external Schottky diode must be able to handle. The calculation must be done for the minimum input voltage where the peak switch current is highest.

Inductor Selection (Boost Converter)

The TPS65161 operates typically with a 10-µH inductor. Other possible inductor values are 6.8-µH or 22-µH. The main parameter for the inductor selection is the saturation current of the inductor, which should be higher than the peak switch current as previously calculated, with additional margin to cover for heavy load transients. The alternative, more conservative approach, is to choose the inductor with saturation current at least as high as the typical switch current limit of 3.5 A. The second important parameter is the inductor dc resistance. Usually, the lower the dc resistance the higher the efficiency. The efficiency difference between different inductors can vary between 2% to 10%. Possible inductors are shown in Table 2.

Table 2. Inductor Selection (Boost Converter)

INDUCTOR VALUE	COMPONENT SUPPLIER	DIMENSIONS in mm	Isat/DCR
22 µH	Coilcraft MSS1038-103NX	10,2 × 10,2 × 3,6	2.9 A/73 mΩ
22 µH	Coilcraft DO3316-103	12,85 × 9,4 × 5,21	3.8 A/38 mΩ
10 µH	Sumida CDRH8D43-100	8,3 × 8,3 × 4,5	4.0 A/29 mΩ
10 µH	Sumida CDH74-100	7,3 × 8,0 × 5,2	2.75 A/43 mΩ
10 µH	Coilcraft MSS1038-103NX	10,2 × 10,2 × 3,6	4.4 A/35 mΩ
6.8 µH	Wuerth Elektronik 7447789006	7,3 × 7,3 × 3,2	2.5 A/44 mΩ

Output Capacitor Selection (Boost Converter)

For best output voltage filtering, a low ESR output capacitor is recommended. Ceramic capacitors have a low ESR value and work best with the TPS65161. Usually, three 22-µF ceramic output capacitors in parallel are sufficient for most applications. If a lower voltage drop during load transients is required, more output capacitance can be added. See Table 3 for the selection of the output capacitor.

Copyright © 2006–2013, Texas Instruments Incorporated

Table 3. Output Capacitor Selection (Boost Converter)

CAPACITOR	VOLTAGE RATING	COMPONENT SUPPLIER
22 µF/1812	16 V	Taiyo Yuden EMK432BJ226MM

Rectifier Diode Selection (Boost Converter)

To achieve high efficiency, a Schottky diode should be used. The reverse voltage rating should be higher than the maximum output voltage of the converter. The average rectified forward-current rating needed for the Schottky diode is calculated as the off-time of the converter times the maximum switch current of the TPS65161:

$$D = 1 - \frac{Vin}{Vout}$$

$$I_{avg} = (1 - D) \times Isw = \frac{Vin}{Vout} \times 2.8\text{ A with Isw} = \text{minimum switch current of the TPS65161 (2.8 A).}$$

Usually, a Schottky diode with 2-A maximum average rectified forward-current rating is sufficient for most applications. Secondly, the Schottky rectifier has to be able to dissipate the power. The dissipated power is the average rectified forward current times the diode forward voltage.

$P_D = I_{avg} \times V_F = Isw \times (1 - D) \times V_F$ (with Isw = minimum switch current of the TPS65161 (2.8 A).

Table 4. Rectifier Diode Selection (Boost Converter)

CURRENT RATING I_{avg}	Vr	$V_{forward}$	$R_{\theta JA}$	SIZE	COMPONENT SUPPLIER
3 A	20 V	0.36 at 3 A	46°C/W	SMC	MBRS320, International Rectifier
2 A	20 V	0.44 V at 3 A	75°C/W	SMB	SL22, Vishay Semiconductor
2 A	20 V	0.5 at 2 A	75°C/W	SMB	SS22, Fairchild Semiconductor

Setting the Output Voltage and Selecting the Feedforward Capacitor (Boost Converter)

The output voltage is set by the external resistor divider and is calculated as:

$$V_{out} = 1.146\text{ V} \times \left(1 + \frac{R1}{R2}\right)$$

Across the upper resistor, a bypass capacitor is required to achieve a good load transients response and to have a stable converter loop. Together with R1, the bypass capacitor Cff sets a zero in the control loop. Depending on the inductor value, the zero frequency needs to be set. For a 6.8-µH or 10-µH inductor, f_z = 10 kHz and for a 22-µH inductor, f_z = 7 kHz.

$$Cff = \frac{1}{2 \times \pi \times f_z \times R1} = \frac{1}{2 \times \pi \times 10\text{ kHz} \times R1}$$

A value coming closest to the calculated value should be used.

Compensation (COMP) (Boost Converter)

The regulator loop can be compensated by adjusting the external components connected to the COMP pin. The COMP pin is the output of the internal transconductance error amplifier. A single capacitor connected to this pin sets the low-frequency gain. Usually, a 22-nF capacitor is sufficient for most of the applications. Adding a series resistor sets an additional zero and increases the high-frequency gain. The following formula calculates at what frequency the resistor increases the high-frequency gain.

$$f_z = \frac{1}{2 \times \pi \times Cc \times Rc}$$

Lower input voltages require a higher gain and therefore a lower compensation capacitor value.

Step-Down Converter Design Procedure

Setting the Output Voltage

The step-down converter uses an external voltage divider to set the output voltage. The output voltage is calculated as:

$$V_{out} = 1.213\ V \times \left(1 + \frac{R1}{R2}\right)$$

with R2 as 1.2 kΩ, and internal reference voltage $V_{(ref)}$typ = 1.213 V

At load current <1 mA, the device operates in discontinuous conduction mode. When the load current is reduced to zero, the output voltage rises slightly above the nominal output voltage. At zero load current, the device skips clock cycles but does not completely stop switching; thus, the output voltage sits slightly higher than the nominal output voltage. Therefore, the lower feedback resistor is selected to be around 1.2 kΩ to always have around 1-mA minimum load current.

Selecting the Feedforward Capacitor

The feedforward capacitor across the upper feedback resistor divider sets a zero in the converter loop transfer function. For a 15-µH inductor, f_z = 8 kHz and when a 22-µH inductor is used, f_z = 17 kHz.

(Example for the 3.3-V output)

$$C_z = \frac{1}{2 \times \pi \times 8\ kHz \times R1} = \frac{1}{2 \times \pi \times 8\ kHz \times 2k\Omega} = 9.9\ nF \approx 10\ nF$$

Usually a capacitor value closest to the calculated value is selected.

Inductor Selection (Step-Down Converter)

The TPS65161 typically operates with a 15-µH inductor value. For high efficiencies, the inductor should have a low dc resistance to minimize conduction losses. This needs to be considered when selecting the appropriate inductor. In order to avoid saturation of the inductor, the inductor should be rated at least for the maximum output current of the converter, plus the inductor ripple current that is calculated as:

$$\Delta I_L = Vout \times \frac{1 - \frac{Vout}{Vin}}{L \times f} \qquad I_{Lmax} = I_{outmax} + \frac{\Delta I_L}{2}$$

With:

f = Switching frequency (750 kHz, 500 kHz minimal)

L = Inductor value (typically 15 µH)

ΔI_L= Peak-to-peak inductor ripple current

I_{Lmax} = Maximum inductor current

The highest inductor current occurs at maximum V_{IN}. A more conservative approach is to select the inductor current rating just for the typical switch current of 3.2 A.

Table 5. Inductor Selection (Step-Down Converter)

INDUCTOR VALUE	COMPONENT SUPPLIER	DIMENSIONS in mm	Isat/DCR
15 µH	Wuerth 7447789115	7,3 × 7,3 × 3,2	1.75 A/100 mΩ
15 µH	Sumida CDRH8D28-150	8,3 × 8,3 × 3,0	1.9 A/53 mΩ
15 µH	Sumida CDRH8D38-150	8,3 × 8,3 × 4,0	2.3 A/53 mΩ
15 µH	Coilcraft MSS1038-153NX	10,2 × 10,2 × 3,6	2.7 A/50 mΩ

Copyright © 2006–2013, Texas Instruments Incorporated

Rectifier Diode Selection (Step-Down Converter)

To achieve high efficiency, a Schottky diode should be used. The reverse voltage rating should be higher than the maximum output voltage of the step-down converter. The averaged rectified forward current at which the Schottky diode needs to be rated is calculated as the off-time of the step-down converter times the maximum switch current of the TPS65161:

$$D = \frac{Vout}{Vin}$$

$$I_{avg} = (1 - D) \times I_{sw} = \left(1 - \frac{Vout}{Vin}\right) \times 2.5\ A \quad \text{with Isw = minimum switch current of the TPS65161 (2.5 A)}$$

Usually, a Schottky diode with 1.5-A or 2-A maximum average rectified forward current rating is sufficient for most applications. Secondly, the Schottky rectifier has to be able to dissipate the power. The dissipated power is the average rectified forward current times the diode forward voltage.

$$P_D = I_{avg} \times V_F = Isw \times (1 - D) \times V_F \text{ with Isw = minimum switch current of the TPS65161 (2.5 A).} \quad (1)$$

Table 6. Rectifier Diode Selection (Step-Down Converter)

CURRENT RATING I_{avg}	Vr	$V_{forward}$	$R_{\theta JA}$	SIZE	COMPONENT SUPPLIER
3 A	20 V	0.36 V at 3 A	46°C/W	SMC	MBRS320, International Rectifier
2 A	20 V	0.44 V at 2 A	75°C/W	SMB	SL22, Vishay Semiconductor
2 A	20 V	0.5 V at 2 A	75°C/W	SMB	SS22, Fairchild Semiconductor
1.5 A	20 V	0.445 V at 1 A	88°C/W	SMA	SL12, Vishay Semiconductor

Output Capacitor Selection (Step-Down Converter)

The device is designed to work with ceramic output capacitors. When using a 15-µH inductor, two 22-µF ceramic output capacitors are recommended. More capacitance can be added to improve the load transient response.

Table 7. Output Selection (Step-Down Converter)

CAPACITOR	VOLTAGE RATING	COMPONENT SUPPLIER
22 µF/0805	6.3 V	Taiyo Yuden JMK212BJ226MG

Copyright © 2006–2013, Texas Instruments Incorporated

Layout Consideration

The PCB layout is an important step in the power supply design. An incorrect layout could cause converter instability, load regulation problems, noise, and EMI issues. Especially with a switching dc-dc converter at high load currents, too-thin PCB traces can cause significant voltage spikes. Good grounding becomes important as well. If possible, a common ground plane to minimize ground shifts between analog (GND) and power ground (PGND) is recommended. Additionally, the following PCB design layout guidelines are recommended for the TPS65161:

1. Separate the power supply traces for AVIN and VINB, and use separate bypass capacitors.
2. Use a short and wide trace to connect the OS pin to the output of the boost converter.
3. To minimize noise coupling into the OS pin, use a 470-nF bypass capacitor to GND.
4. Place the rectifier diode of the step down converter as close as possible to the SWB pin.
5. Use short traces for the charge-pump drive pins (DRN, DRP) of V_{GH} and V_{GL} because these traces carry switching waveforms.
6. Place a 1-µF bypass capacitor from the SUP pin to GND.
7. Place the flying capacitors as close as possible to the DRP and DRN pin, avoiding a high voltage spike at these pins.
8. Place the Schottky diodes as close as possible to the IC, respective to the flying capacitors connected to the DRP and DRN.
9. Route the feedback network of the negative charge pump away from the drive pin traces (DRN) of the negative charge pump. This avoids parasitic coupling into the feedback network of the negative charge pump giving good output voltage accuracy and load regulation. To do this, use the FREQ pin and trace to isolate DRN from FBN.
10. Connect a 220-nF capacitor directly from the REF pin (24) to GND (23) for a stable and noise free reference voltage.

Copyright © 2006–2013, Texas Instruments Incorporated

APPLICATION INFORMATION

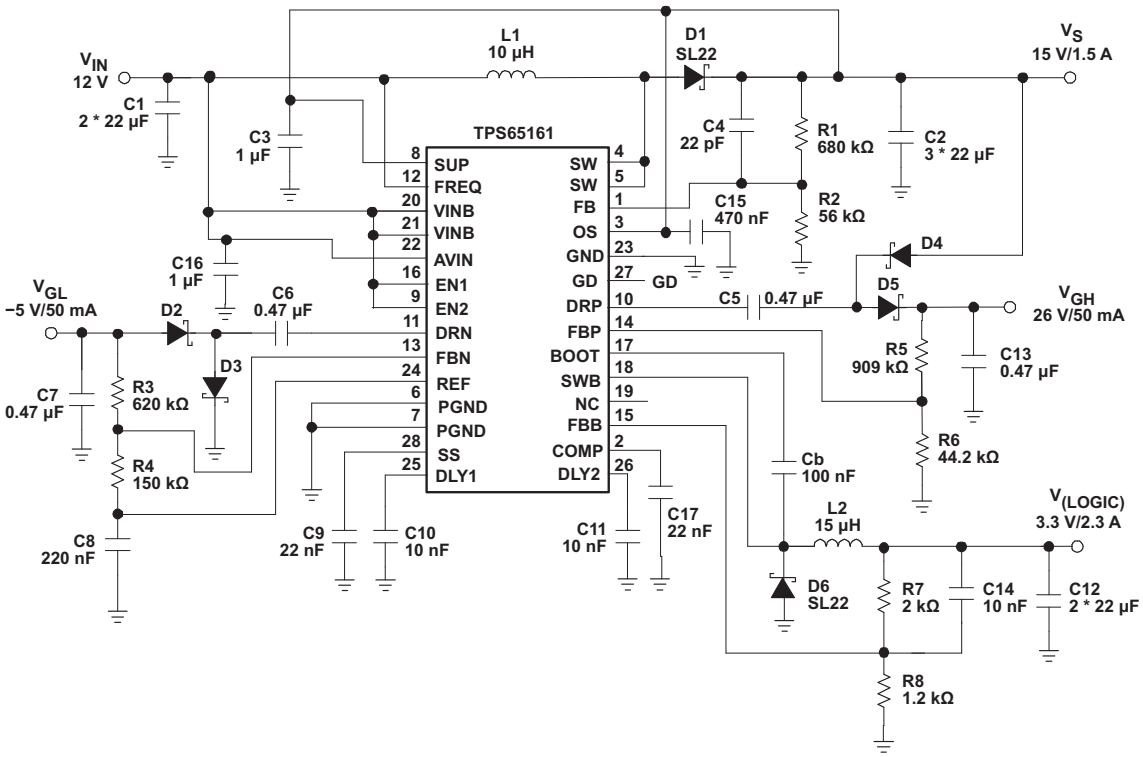

Figure 19. Standard 12-V to 15-V Conversion

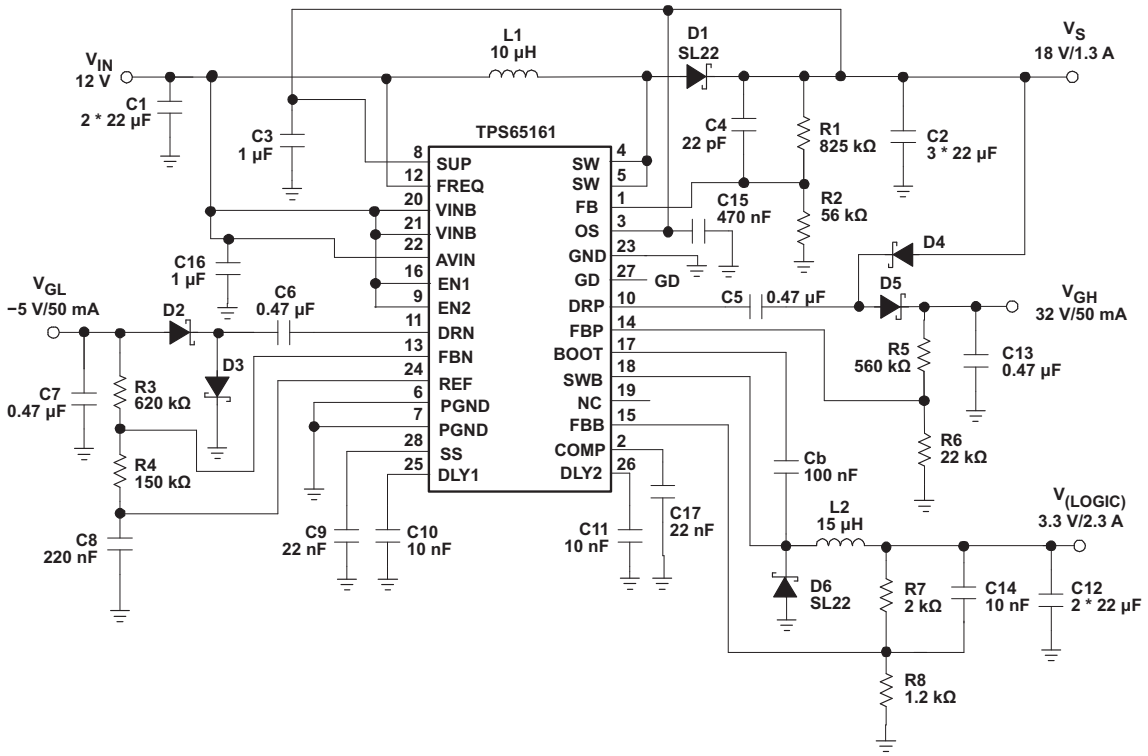

Figure 20. Standard 12-V to 18-V Conversion

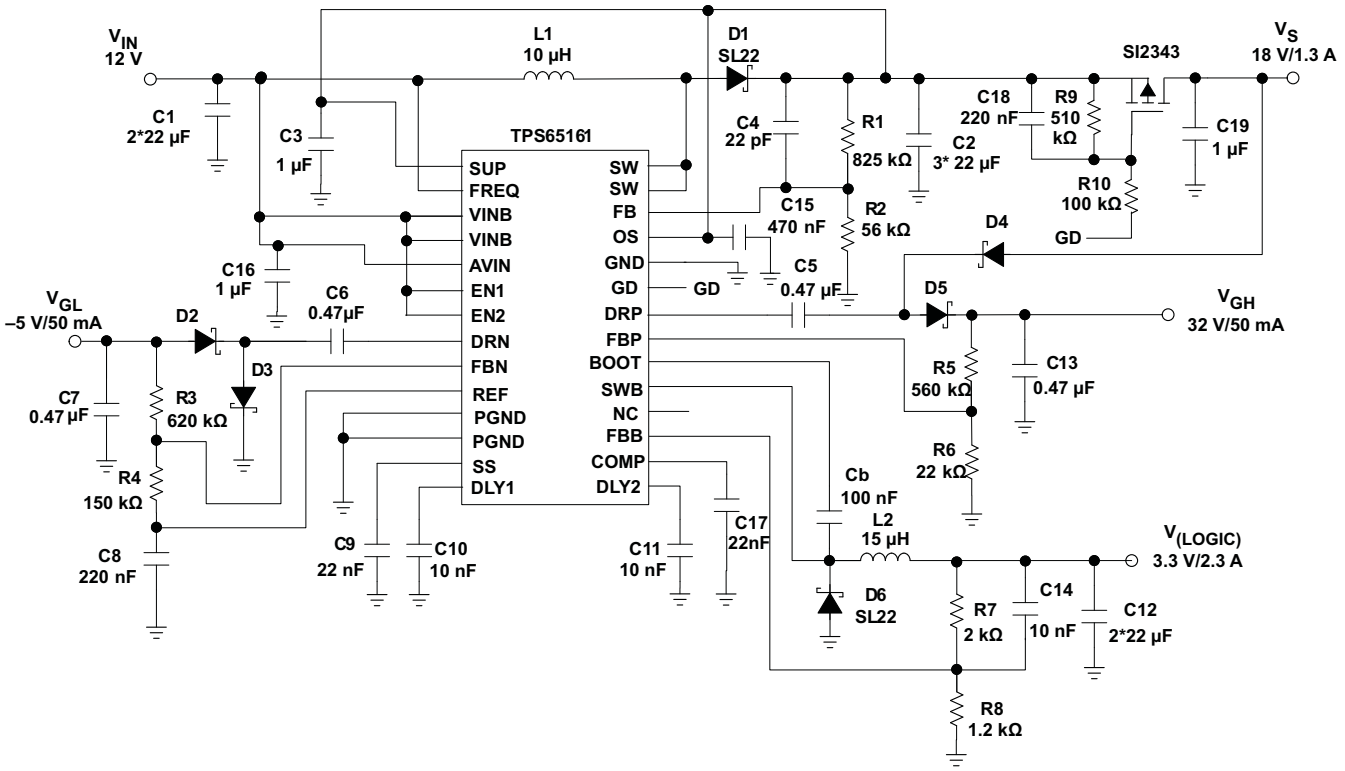

Figure 21. Standard 12-V to 18-V Conversion Using an External Isolation MOSFET to Isolate V_S as well as V_{GH}

Copyright © 2006–2013, Texas Instruments Incorporated

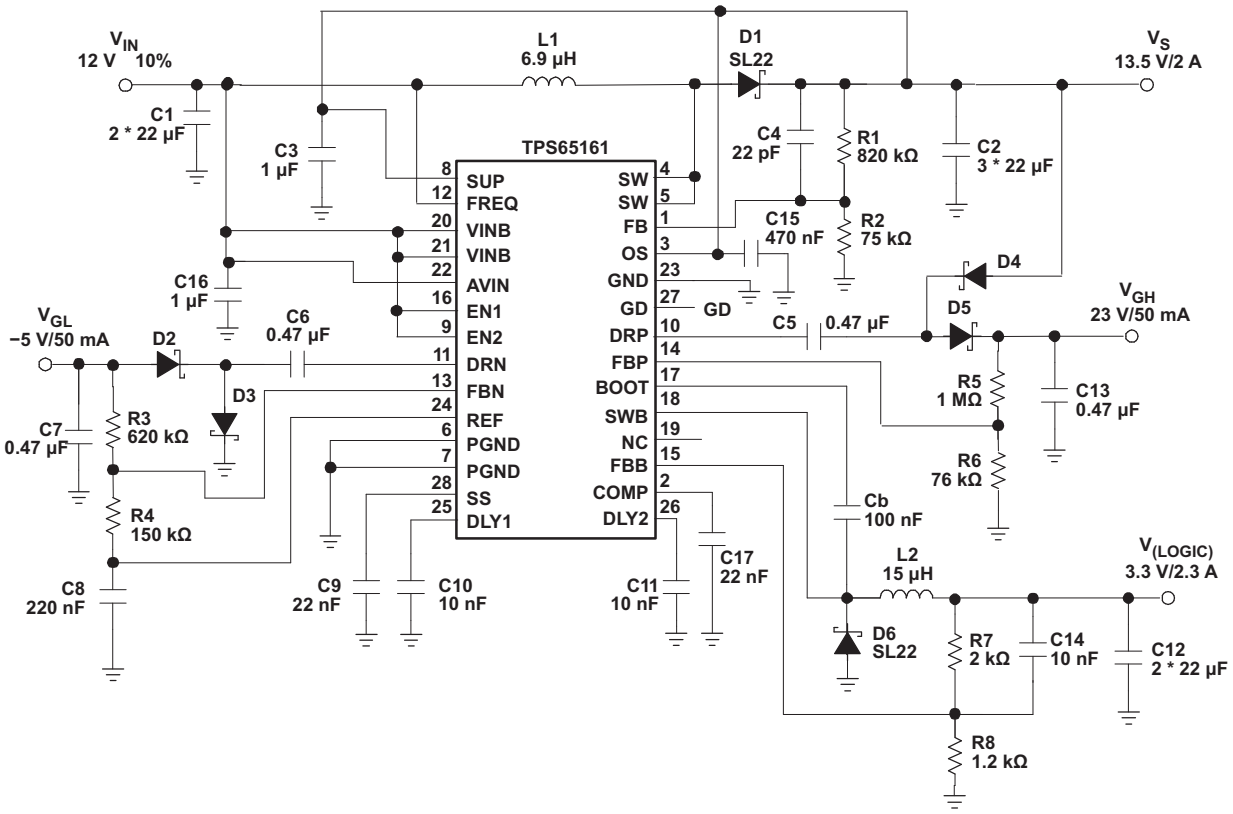

Figure 22. Standard 12-V to 13.5-V Conversion

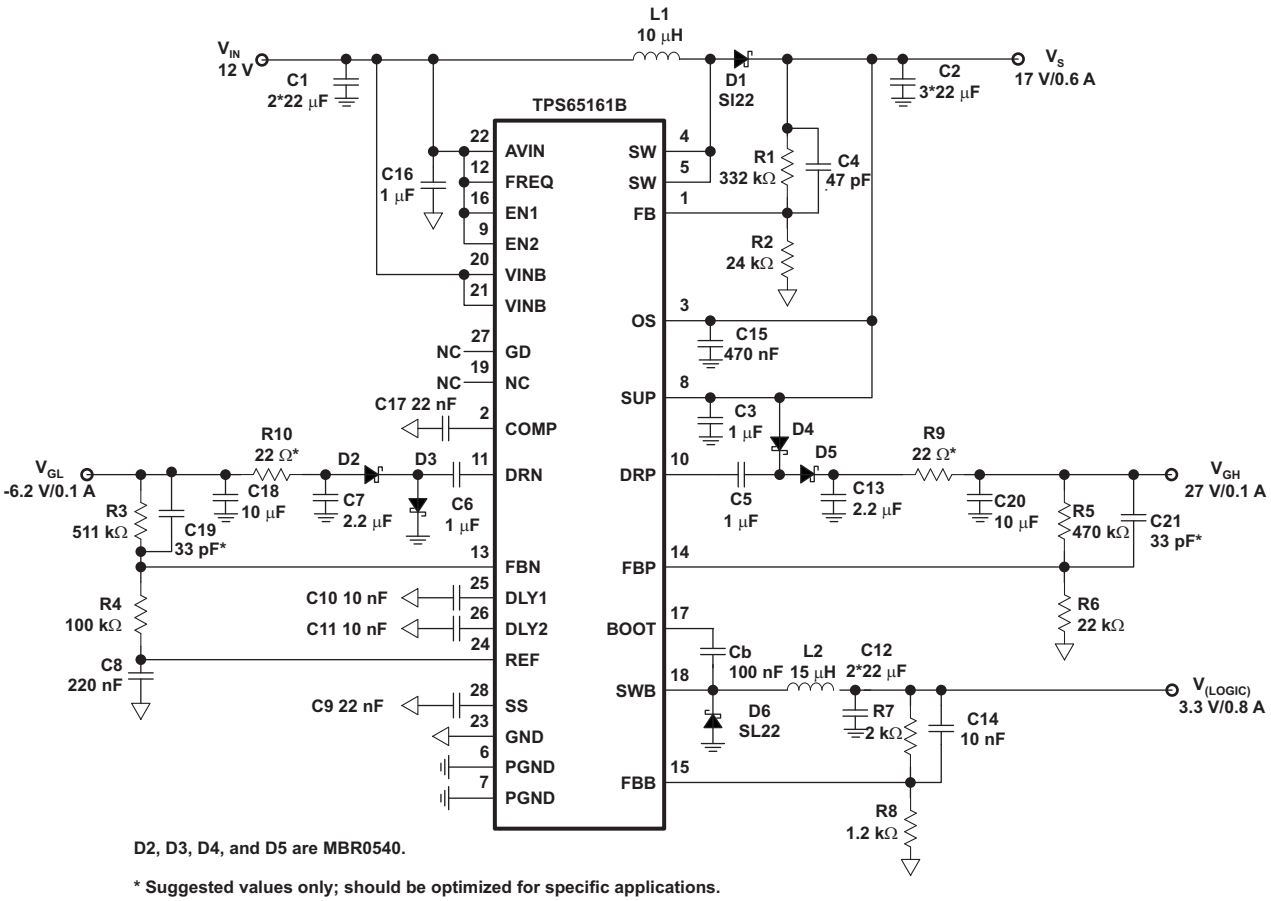

Figure 23. Standard 12-V to 17-V Conversion with 100-mA V_{GH} and V_{GL} Output Current

Copyright © 2006–2013, Texas Instruments Incorporated

REVISION HISTORY

Changes from Original (April 2006) to Revision A	Page
• Added device number TPS65161A	1

Changes from Revision A (Seotember 2007) to Revision B	Page
• Changed the ORDERING INFORMATION table	2
• Changed equation From: D = 1 - (Vout/Vin) To: D = 1 - (Vin/Vout).	19
• Changed equation From: Isw × (1 × D) To: Isw × (1 - D)	19
• Changed From: TPS65161 (2.6 A) To: TPS65161 (2.8 A)	19
• Changed equation From: D = 1-(Vout/Vin) To: D = (Vout/Vin)	21
• Changed From: TPS65161 (2 A) To: TPS65161 (2.5 A)	21
• Changed Title of Table 7From: Output Selection (Boost Converter) To: Output Selection (Step-Down Converter)	21

Changes from Revision B (November 2007) to Revision C	Page
• Added device number TPS65161AB	1
• Changed the ORDERING INFORMATION table	2
• Added new figure - Standard 12-V to 17-V Conversion with 100-mA V_{GH} and V_{GL} Output Current	26

Changes from Revision C (October 2008) to Revision D	Page
• Changed N-MOSFET on-resistance (Q1) To: (Q5)	4
• Changed N-MOSFET switch current limit (Q1) To: (Q5)	4
• Changed $r_{DS(ON)}$ - Figure 8 description From: N-channel main switch Q1 To: N-channel main switch Q5	8
• Changed Functional Block Diagram - component Q3 to Q5, addd callout for component Q4	13

Changes from Revision D (September 2009) to Revision E	Page
• Changed list item 3 From: To minimize noise coupling into the OS pin, use a 470-pF bypass capacitor to GND. To: To minimize noise coupling into the OS pin, use a 470-nF bypass capacitor to GND.	22

Copyright © 2006–2013, Texas Instruments Incorporated

PACKAGING INFORMATION

Orderable part number	Status (1)	Material type (2)	Package | Pins	Package qty | Carrier	RoHS (3)	Lead finish/ Ball material (4)	MSL rating/ Peak reflow (5)	Op temp (°C)	Part marking (6)
TPS65161APWPR	Active	Production	HTSSOP (PWP) | 28	2000 | LARGE T&R	Yes	NIPDAU	Level-2-260C-1 YEAR	-40 to 85	TPS65161A
TPS65161APWPR.A	Active	Production	HTSSOP (PWP) | 28	2000 | LARGE T&R	Yes	NIPDAU	Level-2-260C-1 YEAR	-40 to 85	TPS65161A
TPS65161BPWPR	Active	Production	HTSSOP (PWP) | 28	2000 | LARGE T&R	Yes	NIPDAU	Level-2-260C-1 YEAR	-40 to 85	TPS65161B
TPS65161BPWPR.A	Active	Production	HTSSOP (PWP) | 28	2000 | LARGE T&R	Yes	NIPDAU	Level-2-260C-1 YEAR	-40 to 85	TPS65161B
TPS65161PWPR	Active	Production	HTSSOP (PWP) | 28	2000 | LARGE T&R	Yes	NIPDAU	Level-2-260C-1 YEAR	-40 to 85	TPS65161
TPS65161PWPR.A	Active	Production	HTSSOP (PWP) | 28	2000 | LARGE T&R	Yes	NIPDAU	Level-2-260C-1 YEAR	-40 to 85	TPS65161
TPS65161PWPRG4	Active	Production	HTSSOP (PWP) | 28	2000 | LARGE T&R	Yes	NIPDAU	Level-2-260C-1 YEAR	-40 to 85	TPS65161

(1) **Status:** For more details on status, see our product life cycle.

(2) **Material type:** When designated, preproduction parts are prototypes/experimental devices, and are not yet approved or released for full production. Testing and final process, including without limitation quality assurance, reliability performance testing, and/or process qualification, may not yet be complete, and this item is subject to further changes or possible discontinuation. If available for ordering, purchases will be subject to an additional waiver at checkout, and are intended for early internal evaluation purposes only. These items are sold without warranties of any kind.

(3) **RoHS values:** Yes, No, RoHS Exempt. See the TI RoHS Statement for additional information and value definition.

(4) **Lead finish/Ball material:** Parts may have multiple material finish options. Finish options are separated by a vertical ruled line. Lead finish/Ball material values may wrap to two lines if the finish value exceeds the maximum column width.

(5) **MSL rating/Peak reflow:** The moisture sensitivity level ratings and peak solder (reflow) temperatures. In the event that a part has multiple moisture sensitivity ratings, only the lowest level per JEDEC standards is shown. Refer to the shipping label for the actual reflow temperature that will be used to mount the part to the printed circuit board.

(6) **Part marking:** There may be an additional marking, which relates to the logo, the lot trace code information, or the environmental category of the part.

Multiple part markings will be inside parentheses. Only one part marking contained in parentheses and separated by a "~" will appear on a part. If a line is indented then it is a continuation of the previous line and the two combined represent the entire part marking for that device.

Important Information and Disclaimer: The information provided on this page represents TI's knowledge and belief as of the date that it is provided. TI bases its knowledge and belief on information provided by third parties, and makes no representation or warranty as to the accuracy of such information. Efforts are underway to better integrate information from third parties. TI has taken and continues to take reasonable steps to provide representative and accurate information but may not have conducted destructive testing or chemical analysis on incoming materials and chemicals. TI and TI suppliers consider certain information to be proprietary, and thus CAS numbers and other limited information may not be available for release.

In no event shall TI's liability arising out of such information exceed the total purchase price of the TI part(s) at issue in this document sold by TI to Customer on an annual basis.

TAPE AND REEL INFORMATION

REEL DIMENSIONS

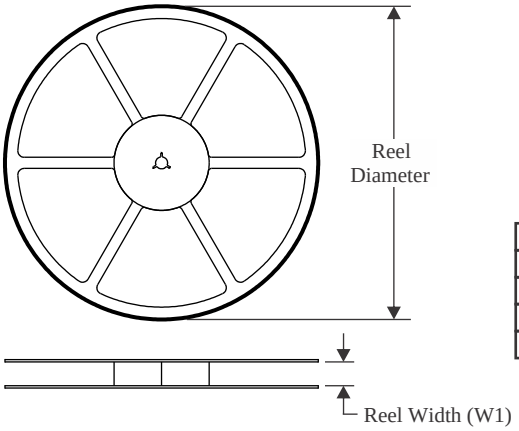

TAPE DIMENSIONS

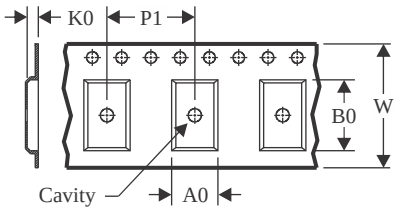

A0	Dimension designed to accommodate the component width
B0	Dimension designed to accommodate the component length
K0	Dimension designed to accommodate the component thickness
W	Overall width of the carrier tape
P1	Pitch between successive cavity centers

QUADRANT ASSIGNMENTS FOR PIN 1 ORIENTATION IN TAPE

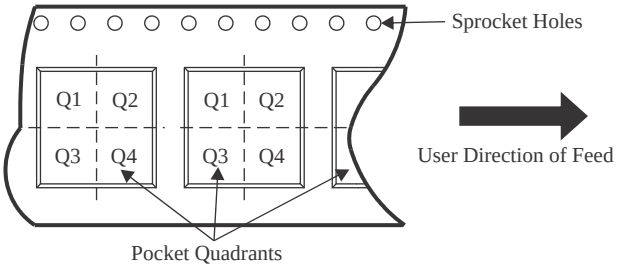

*All dimensions are nominal

Device	Package Type	Package Drawing	Pins	SPQ	Reel Diameter (mm)	Reel Width W1 (mm)	A0 (mm)	B0 (mm)	K0 (mm)	P1 (mm)	W (mm)	Pin1 Quadrant
TPS65161APWPR	HTSSOP	PWP	28	2000	330.0	16.4	6.9	10.2	1.8	12.0	16.0	Q1
TPS65161BPWPR	HTSSOP	PWP	28	2000	330.0	16.4	6.9	10.2	1.8	12.0	16.0	Q1
TPS65161PWPR	HTSSOP	PWP	28	2000	330.0	16.4	6.75	10.1	1.8	12.0	16.0	Q1

TAPE AND REEL BOX DIMENSIONS

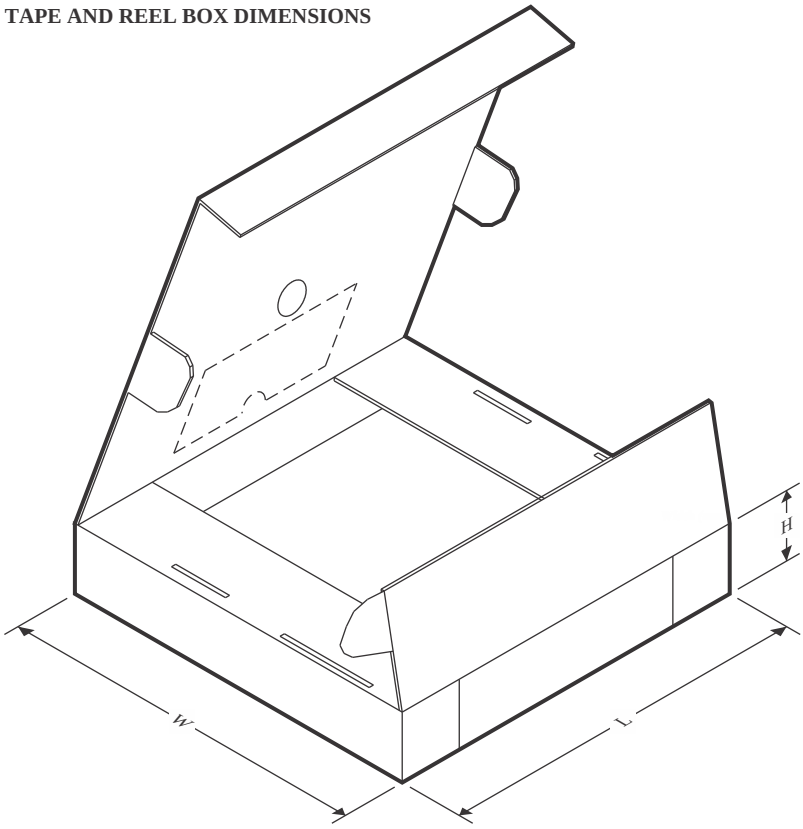

*All dimensions are nominal

Device	Package Type	Package Drawing	Pins	SPQ	Length (mm)	Width (mm)	Height (mm)
TPS65161APWPR	HTSSOP	PWP	28	2000	350.0	350.0	43.0
TPS65161BPWPR	HTSSOP	PWP	28	2000	350.0	350.0	43.0
TPS65161PWPR	HTSSOP	PWP	28	2000	353.0	353.0	32.0

GENERIC PACKAGE VIEW

PWP 28

PowerPAD™ TSSOP - 1.2 mm max height

4.4 x 9.7, 0.65 mm pitch

SMALL OUTLINE PACKAGE

This image is a representation of the package family, actual package may vary.
Refer to the product data sheet for package details.

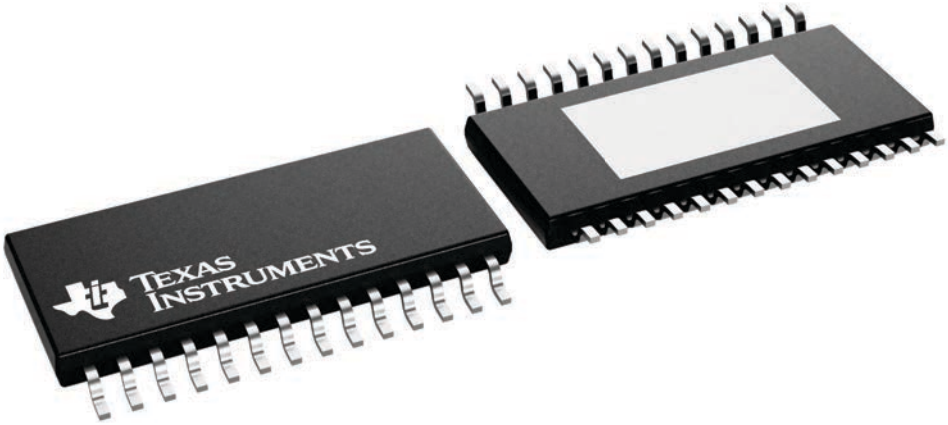

4224765/B

IMPORTANT NOTICE AND DISCLAIMER

TI PROVIDES TECHNICAL AND RELIABILITY DATA (INCLUDING DATASHEETS), DESIGN RESOURCES (INCLUDING REFERENCE DESIGNS), APPLICATION OR OTHER DESIGN ADVICE, WEB TOOLS, SAFETY INFORMATION, AND OTHER RESOURCES “AS IS” AND WITH ALL FAULTS, AND DISCLAIMS ALL WARRANTIES, EXPRESS AND IMPLIED, INCLUDING WITHOUT LIMITATION ANY IMPLIED WARRANTIES OF MERCHANTABILITY, FITNESS FOR A PARTICULAR PURPOSE OR NON-INFRINGEMENT OF THIRD PARTY INTELLECTUAL PROPERTY RIGHTS.

These resources are intended for skilled developers designing with TI products. You are solely responsible for (1) selecting the appropriate TI products for your application, (2) designing, validating and testing your application, and (3) ensuring your application meets applicable standards, and any other safety, security, regulatory or other requirements.

These resources are subject to change without notice. TI grants you permission to use these resources only for development of an application that uses the TI products described in the resource. Other reproduction and display of these resources is prohibited. No license is granted to any other TI intellectual property right or to any third party intellectual property right. TI disclaims responsibility for, and you fully indemnify TI and its representatives against any claims, damages, costs, losses, and liabilities arising out of your use of these resources.

TI’s products are provided subject to TI’s Terms of Sale, TI’s General Quality Guidelines, or other applicable terms available either on ti.com or provided in conjunction with such TI products. TI’s provision of these resources does not expand or otherwise alter TI’s applicable warranties or warranty disclaimers for TI products. Unless TI explicitly designates a product as custom or customer-specified, TI products are standard, catalog, general purpose devices.

TI objects to and rejects any additional or different terms you may propose.

Copyright © 2026, Texas Instruments Incorporated

Last updated 10/2025