TPS65020 Power Management IC For Li-Ion or Li-Polymer Powered Systems

1 Features

- 1.2-A, 97% Efficient Step-Down Converter for System Voltage (VDCDC1)
- 1-A, Up to 95% Efficient Step-Down Converter for Memory Voltage (VDCDC2)
- 800-mA, 90% Efficient Step-Down Converter for Processor Core (VDCDC3)
- 20-mA LDO and Switch for Real-Time Clock (VRTC)
- 2 × 200-mA LDO for SRAM and PLL
- Dynamic Voltage Management for Processor Core
- Externally Adjustable Reset Delay Time
- Battery Backup Functionality
- Separate Enable Pins for Inductive Converters
- I^2C-Compatible Serial Interface
- 85-µA Quiescent Current
- Low Ripple PFM Mode
- Thermal Shutdown Protection
- Push-Button I/O

2 Applications

- PDAs
- Cellular and Smart Phones
- Internet Audio Players
- Digital Still Cameras
- Digital Radio Players
- Split-Supply TMS320™ DSP Family and µP Solutions: OMAP™1610, OMAP1710, OMAP330
- Intel® PXA270, and so Forth

3 Description

The TPS65020 device is an integrated power management IC for applications powered by one Li-Ion or Li-Polymer cell, and which requires multiple power rails.

Device Information(1)

PART NUMBER	PACKAGE	BODY SIZE (NOM)
TPS65020	VQFN (40)	6.00 mm × 6.00 mm

(1) For all available packages, see the orderable addendum at the end of the data sheet.

Simplified Schematic

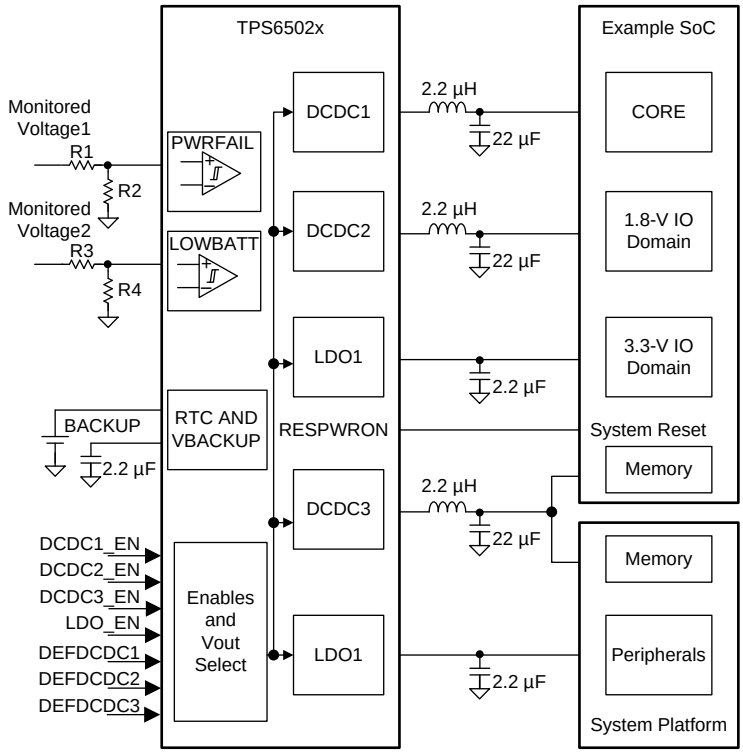

An IMPORTANT NOTICE at the end of this data sheet addresses availability, warranty, changes, use in safety-critical applications, intellectual property matters and other important disclaimers. PRODUCTION DATA.

Table of Contents

1 Features ... 1
2 Applications ... 1
3 Description ... 1
4 Revision History ... 2
5 Description (continued) ... 3
6 Pin Configuration and Functions ... 4
7 Specifications ... 6
7.1 Absolute Maximum Ratings ... 6
7.2 ESD Ratings ... 6
7.3 Recommended Operating Conditions ... 6
7.4 Thermal Information ... 7
7.5 Electrical Characteristics ... 7
7.6 Electrical Characteristics: Supply Pins VCC, VINDCDC1, VINDCDC2, VINDCDC3 ... 9
7.7 Electrical Characteristics: Supply Pins VBACKUP, VSYSIN, VRTC, VINLDO ... 9
7.8 Electrical Characteristics: VDCDC1 Step-Down Converter ... 10
7.9 Electrical Characteristics: VDCDC2 Step-Down Converter ... 11
7.10 Electrical Characteristics: VDCDC3 Step-Down Converter ... 11
7.11 Timing Requirements ... 12
7.12 Typical Characteristics ... 15
8 Detailed Description ... 20
8.1 Overview ... 20
8.2 Functional Block Diagram ... 21
8.3 Feature Description ... 22
8.4 Device Functional Modes ... 26
8.5 Programming ... 27
8.6 Register Maps ... 30
9 Application and Implementation ... 36
9.1 Application Information ... 36
9.2 Typical Application ... 38
10 Power Supply Recommendations ... 43
10.1 Requirements for Supply Voltages Below 3.0 V ... 43
11 Layout ... 44
11.1 Layout Guidelines ... 44
11.2 Layout Example ... 44
12 Device and Documentation Support ... 45
12.1 Device Support ... 45
12.2 Community Resources ... 45
12.3 Trademarks ... 45
12.4 Electrostatic Discharge Caution ... 45
12.5 Glossary ... 45
13 Mechanical, Packaging, and Orderable Information ... 45

4 Revision History

NOTE: Page numbers for previous revisions may differ from page numbers in the current version.

Changes from Revision C (September 2011) to Revision D	Page
• Added *ESD Rating* table, *Thermal Information* table, *Feature Description* section, *Device Functional Modes*, *Application and Implementation* section, *Power Supply Recommendations* section, *Layout* section, *Device and Documentation Support* section, and *Mechanical, Packaging, and Orderable Information* section	1

Copyright © 2005–2016, Texas Instruments Incorporated

5 Description (continued)

The TPS65020 device provides three highly efficient, step-down converters targeted at providing the core voltage, peripheral, I/O, and memory rails in a processor-based system. All three step-down converters enter a low-power mode at light load for maximum efficiency across the widest possible range of load currents.

The TPS65020 device also integrates two 200-mA LDO voltage regulators, which are enabled with an external input pin. Each LDO operates with an input voltage range from 1.5 V to 6.5 V, thus allowing them to be supplied from one of the step-down converters or directly from the main battery. The two 200-mA LDO voltage regulators are intended for use with the SDRAM and PLL power supply in an Intel PXA270-based system. The serial interface is used for dynamic voltage scaling of the core voltage, masking interrupts, or for disabling or enabling and setting the LDO output voltages. The interface is compatible with both the fast and standard mode I^2C specifications, allowing transfers at up to 400 kHz.

The TPS65020 incorporates a push-button debounced input and latched output for implementation of a push-button turnon feature, typically required in smart phones or wireless PDAs.

Copyright © 2005–2016, Texas Instruments Incorporated

6 Pin Configuration and Functions

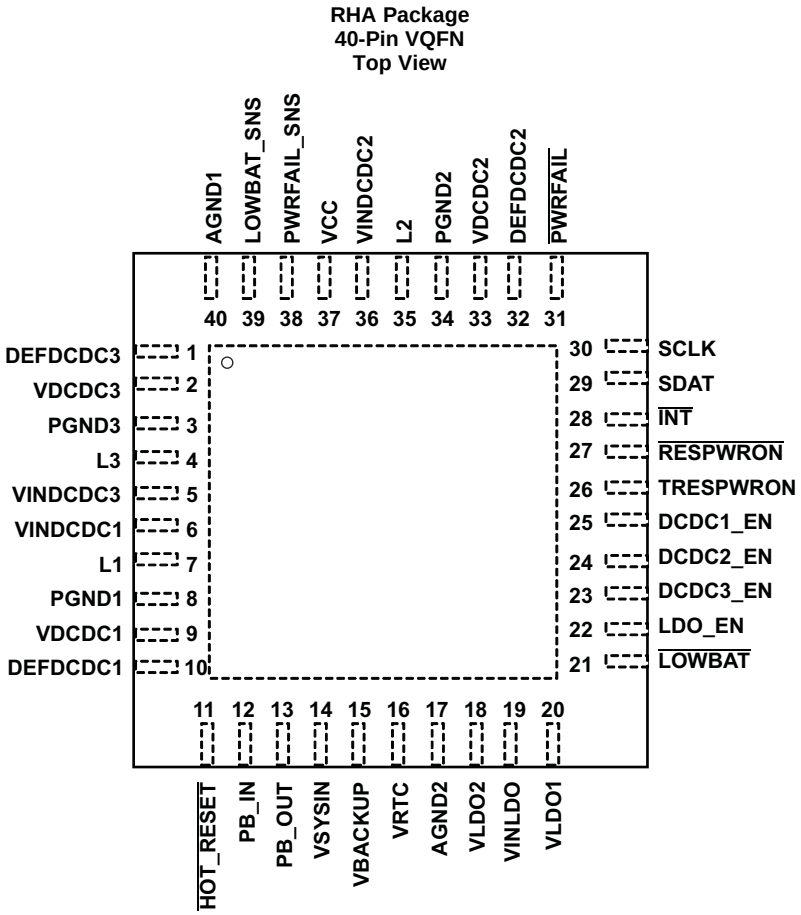

Pin Functions

PIN		I/O	DESCRIPTION
NAME	NO.		
SWITCHING REGULATOR SECTION			
AGND1	40		Analog ground connection. All analog ground pins are connected internally on the chip.
AGND2	17		Analog ground connection. All analog ground pins are connected internally on the chip.
DEFDCDC1	10	I	Input signal indicating default VDCDC1 voltage, 0 = 3 V, 1 = 3.3 V This pin can also be connected to a resistor divider between VDCDC1 and GND. If the output voltage of the DCDC1 converter is set in a range from 0.6 V to VINDCDC1 V
DEFDCDC2	32	I	Input signal indicating default VDCDC2 voltage, 0 = 1.8 V, 1 = 2.5 V This pin can also be connected to a resistor divider between VDCDC2 and GND. If the output voltage of the DCDC2 converter is set in a range from 0.6 V to VINDCDC2 V
DEFDCDC3	1	I	Input signal indicating default VDCDC3 voltage, 0 = 1.3 V, 1 = 1.55 V This pin can also be connected to a resistor divider between VDCDC3 and GND. If the output voltage of the DCDC3 converter is set in a range from 0.6 V to VINDCDC3 V
DCDC1_EN	25	I	VDCDC1 enable pin. A logic high enables the regulator, a logic low disables the regulator.
DCDC2_EN	24	I	VDCDC2 enable pin. A logic high enables the regulator, a logic low disables the regulator.
DCDC3_EN	23	I	VDCDC3 enable pin. A logic high enables the regulator, a logic low disables the regulator.
L1	7		Switch pin of VDCDC1 converter. The VDCDC1 inductor is connected here.
L2	35		Switch pin of VDCDC2 converter. The VDCDC2 inductor is connected here.
L3	4		Switch pin of VDCDC3 converter. The VDCDC3 inductor is connected here.
PGND1	8		Power ground for VDCDC1 converter

Copyright © 2005–2016, Texas Instruments Incorporated

Pin Functions (continued)

PIN		I/O	DESCRIPTION
NAME	NO.		
PGND2	34		Power ground for VDCDC2 converter
PGND3	3		Power ground for VDCDC3 converter
PowerPAD™	–		Connect the power pad to analog ground
VCC	37	I	Power supply for digital and analog circuitry of VDCDC1, VDCDC2, and VDCDC3 DC-DC converters. This must be connected to the same voltage supply as VINDCDC3, VINDCDC1, and VINDCDC2. Also supplies serial interface block
VDCDC1	9	I	VDCDC1 feedback voltage sense input, connect directly to VDCDC1
VDCDC2	33	I	VDCDC2 feedback voltage sense input, connect directly to VDCDC2
VDCDC3	2	I	VDCDC3 feedback voltage sense input, connect directly to VDCDC3
VINDCDC1	6	I	Input voltage for VDCDC1 step-down converter. This must be connected to the same voltage supply as VINDCDC2, VINDCDC3, and VCC.
VINDCDC2	36	I	Input voltage for VDCDC2 step-down converter. This must be connected to the same voltage supply as VINDCDC1, VINDCDC3, and VCC.
VINDCDC3	5	I	Input voltage for VDCDC3 step-down converter. This must be connected to the same voltage supply as VINDCDC1, VINDCDC2, and VCC.
LDO REGULATOR SECTION			
LDO_EN	22	I	Enable input for LDO1 and LDO2. Logic high enables the LDOs, logic low disables the LDOs
VBACKUP	15	I	Connect the backup battery to this input pin.
VINLDO	19	I	I Input voltage for LDO1 and LDO2
VLDO1	20	O	Output voltage of LDO1
VLDO2	18	O	Output voltage of LDO2
VRTC	16	O	Output voltage of the LDO and switch for the real time clock
VSYSIN	14	I	Input of system voltage for VRTC switch
CONTROL AND I^2C SECTION			
$\overline{\text{HOT_RESET}}$	11	I	Push button input used to reboot or wake-up processor through the $\overline{\text{RESPWRON}}$ output pin
$\overline{\text{INT}}$	28	O	Open-drain output
$\overline{\text{LOW_BAT}}$	21	O	Open-drain output of LOW_BAT comparator
LOWBAT_SNS	39	I	Input for the comparator driving the $\overline{\text{LOW_BAT}}$ output
PB_IN	12	I/O	Push button input debounced and output fed to latch at PB_OUT
PB_OUT	13	I/O	Open-drain output of latch driven by PB_IN. Low after power up.
$\overline{\text{PWRFAIL}}$	31	O	Open-drain output. Active-low when $\overline{\text{PWRFAIL}}$ comparator indicates low VBAT condition.
PWRFAIL_SNS	38	I	Input for the comparator driving the $\overline{\text{PWRFAIL}}$ output
$\overline{\text{RESPWRON}}$	27	O	Open-drain System reset output
SCLK	30	I	Serial interface clock line
SDAT	29	I/O	Serial interface data and address
TRESPWRON	26	I	Connect the timing capacitor to this pin to set the reset delay time: 1 nF → 100 ms

Copyright © 2005–2016, Texas Instruments Incorporated

7 Specifications

7.1 Absolute Maximum Ratings

over operating free-air temperature range (unless otherwise noted)[1]

		MIN	MAX	UNIT
V_I	Input voltage on all pins except AGND and PGND pins with respect to AGND	–0.3	7	V
	Current at VINDCDC1, L1, PGND1, VINDCDC2, L2, PGND2, VINDCDC3, L3, PGND3		2000	mA
	Peak current at all other pins		1000	mA
T_A	Operating free-air temperature	–40	85	°C
T_J	Maximum junction temperature		125	°C
T_{stg}	Storage temperature	–65	150	°C

(1) Stresses beyond those listed under *Absolute Maximum Ratings* may cause permanent damage to the device. These are stress ratings only, which do not imply functional operation of the device at these or any other conditions beyond those indicated under *Recommended Operating Conditions*. Exposure to absolute-maximum-rated conditions for extended periods may affect device reliability.

7.2 ESD Ratings

			VALUE	UNIT
$V_{(ESD)}$	Electrostatic discharge	Human-body model (HBM), per ANSI/ESDA/JEDEC JS-001[1]	±2000	V
		Charged-device model (CDM), per JEDEC specification JESD22-C101[2]	±500	

(1) JEDEC document JEP155 states that 500-V HBM allows safe manufacturing with a standard ESD control process.
(2) JEDEC document JEP157 states that 250-V CDM allows safe manufacturing with a standard ESD control process.

7.3 Recommended Operating Conditions

over operating free-air temperature range (unless otherwise noted)

		MIN	NOM	MAX	UNIT
V_{CC}	Input voltage step-down convertors and VCC pin (VINDCDC1, VINDCDC2, VINDCDC3, VCC); pins must be tied to the same voltage rail	2.5		6	V
V_O	Output voltage for VDCDC1 step-down convertor[1]	0.6		VINDCDC1	V
	Output voltage for VDCDC2 step-down convertor[1]	0.6		VINDCDC2	
	Output voltage for VDCDC3 (core) step-down convertor[1]	0.6		VINDCDC3	
V_I	Input voltage for LDOs (VINLDO1, VINLDO2)	1.5		6.5	V
V_O	Output voltage for LDOs (VLDO1, VLDO2)	1		VINLDO1-2	V
$I_{O(DCDC1)}$	Output current at L1			1200	mA
	Inductor at L1[2]	2.2	3.3		µH
$C_{I(DCDC1)}$	Input capacitor at $V_{I(DCDC1)}$ [2]	10			µF
$C_{O(DCDC1)}$	Output capacitor at VDCDC1 [2]	10	22		µF
$I_{O(DCDC2)}$	Output current at L2			1000	mA
	Inductor at L2 [2]	2.2	3.3		µH
$C_{I(DCDC2)}$	Input capacitor at VDCDC2 [2]	10			µF
$C_{O(DCDC2)}$	Output capacitor at VDCDC2 [2]	10	22		µF
$I_{O(DCDC3)}$	Output current at L3			800	mA
	Inductor at L3 [2]	2.2	3.3		µH
$C_{I(DCDC3)}$	Input capacitor at VDCDC3 [2]	10			µF
$C_{O(DCDC3)}$	Output capacitor at VDCDC3 [2]	10	22		µF
$C_{I(VCC)}$	Input capacitor at VCC [2]	1			µF
$C_{i(VINLDO)}$	Input capacitor at VINLDO [2]	1			µF
$C_{O(VLDO1-2)}$	Output capacitor at VLDO1, VLDO2 [2]	2.2			µF
$I_{O(VLDO1-2)}$	Output current at VLDO1, VLDO2			200	mA

(1) When using an external resistor divider at DEFDCDC3, DEFDCDC2, DEFDCDC1
(2) See *Application and Implementation* for more information.

Copyright © 2005–2016, Texas Instruments Incorporated

Recommended Operating Conditions (continued)

over operating free-air temperature range (unless otherwise noted)

		MIN	NOM	MAX	UNIT
$C_{O(VRTC)}$	Output capacitor at VRTC (2)	4.7			µF
T_A	Operating ambient temperature	–40		85	°C
T_J	Operating junction temperature	–40		125	°C
	Resistor from VINDCDC3, VINDCDC2, VINDCDC1 to VCC used for filtering (3)		1	10	Ω

(3) Up to 3 mA can flow into VCC when all 3 converters are running in PWM. This resistor causes the UVLO threshold to be shifted accordingly.

7.4 Thermal Information

THERMAL METRIC (1)		TPS65020 RHA (VQFN) 40 PINS	UNIT
$R_{\theta JA}$	Junction-to-ambient thermal resistance	31.6	°C/W
$R_{\theta JC(top)}$	Junction-to-case (top) thermal resistance	18.2	°C/W
$R_{\theta JB}$	Junction-to-board thermal resistance	6.6	°C/W
ψ_{JT}	Junction-to-top characterization parameter	0.2	°C/W
ψ_{JB}	Junction-to-board characterization parameter	6.5	°C/W
$R_{\theta JC(bot)}$	Junction-to-case (bottom) thermal resistance	1.7	°C/W

(1) For more information about traditional and new thermal metrics, see the *Semiconductor and IC Package Thermal Metrics* application report, SPRA953.

7.5 Electrical Characteristics

VINDCDC1 = VINDCDC2 = VINDCDC3 = VCC = VINLDO = 3.6 V, VBACKUP = 3 V, T_A = –40°C to 85°C (unless otherwise noted)

PARAMETER		TEST CONDITIONS	MIN	TYP (1)	MAX	UNIT
CONTROL SIGNALS: SCLK, SDAT (INPUT), DCDC1_EN, DCDC2_EN, DCDC3_EN, LDO_EN						
V_{IH}	High level input voltage	Rpullup = 4.7 kΩ, pulled to VRTC	1.3		V_{CC}	V
V_{IL}	Low level input voltage	Rpullup = 4.7 kΩ, pulled to VRTC	0		0.4	V
I_H	Input bias current			0.01	0.1	µA
CONTROL SIGNALS: $\overline{\text{HOT_RESET}}$						
V_{IH}	High level input voltage		1.3		V_{CC}	V
V_{IL}	Low level input voltage		0		0.4	V
	Pullup resistor at $\overline{\text{HOT_RESET}}$, connected to VCC			1000		kΩ
$t_{deglitch}$	Deglitch time at $\overline{\text{HOT_RESET}}$		25	30	35	ms
CONTROL SIGNALS: $\overline{\text{LOWBAT}}$, $\overline{\text{PWRFAIL}}$, $\overline{\text{RESPWRON}}$, $\overline{\text{INT}}$, SDAT (OUTPUT)						
V_{OH}	High level output voltage				6	V
V_{OL}	Low level output voltage	I_{IL} = 5 mA	0		0.3	V
	Duration of low pulse at $\overline{\text{RESPWRON}}$	External capacitor 1 nF		100		ms
ICONST	Internal charge / discharge current on pin TRESPWRON	Used for generating $\overline{\text{RESPWRON}}$ delay	1.7	2	2.3	µA
TRESPWRON_LOWTH	Internal lower comparator threshold on pin TRESPWRON	Used for generating $\overline{\text{RESPWRON}}$ delay	0.225	0.25	0.275	V
TRESPWRON_UPTH	Internal upper comparator threshold on pin TRESPWRON	Used for generating $\overline{\text{RESPWRON}}$ delay	0.97	1	1.103	V
	Resetpwron threshold VRTC falling		–3%	2.4	3%	V
	Resetpwron threshold VRTC rising		–3%	2.52	3%	V

(1) Typical values are at T_A = 25°C

Copyright © 2005–2016, Texas Instruments Incorporated

Electrical Characteristics (continued)

VINDCDC1 = VINDCDC2 = VINDCDC3 = VCC = VINLDO = 3.6 V, VBACKUP = 3 V, T_A = –40°C to 85°C (unless otherwise noted)

PARAMETER		TEST CONDITIONS	MIN	TYP(1)	MAX	UNIT
I_{LK}	Leakage current	Output inactive high			0.1	µA
VLDO1 AND VLDO2 LOW-DROPOUT REGULATORS						
V_I	Input voltage range for LDO1, 2		1.5		6.5	V
V_O	LDO1 output voltage range		1		3.3	V
V_O	LDO2 output voltage range		1		3.3	V
I_O	Maximum output current for LDO1, LDO2		200			mA
$I_{(SC)}$	LDO1 and LDO2 short-circuit Current limit	VLDO1 = GND, VLDO2 = GND			400	mA
	Minimum voltage drop at LDO1, LDO2	I_O = 50 mA, VINLDO = 1.8 V			120	mV
		I_O = 50 mA, VINLDO = 1.5 V		65	150	
		I_O = 200 mA, VINLDO = 1.8 V			300	
	Output voltage accuracy for LDO1, LDO2	I_O = 10 mA	–2%		1%	
	Line regulation for LDO1, LDO2	VINLDO1,2 = VLDO1, 2 + 0.5 V (min. 2.5 V) to 6.5 V, I_O = 10 mA	–1%		1%	
	Load regulation for LDO1, LDO2	I_O = 0 mA to 50 mA	–1%		1%	
	Regulation time for LDO1, LDO2	Load change from 10% to 90%		10		µs
ANALOGIC SIGNALS DEFDCDC1, DEFDCDC2, DEFDCDC3						
V_{IH}	High level input voltage		1.3		V_{CC}	V
V_{IL}	Low level input voltage		0		0.1	V
I_H	Input bias current			0.001	0.05	µA
LOGIC SIGNALS PB_IN; PB_OUT						
V_{OL}	Low level output voltage at PB_OUT	I_{OL} = 20 mA			0.5	V
V_{OH}	High level output voltage PB_OUT				6	V
V_{IL}	Low level input voltage PB_IN				0.4	V
V_{IH}	High level input voltage PB_IN		1.3		V_{CC} (2)	V
	II Input leakage current PB_IN				1	µA
THERMAL SHUTDOWN						
$T_{(SD)}$	Thermal shutdown	Increasing junction temperature		160		°C
	Thermal shutdown hysteresis	Decreasing junction temperature		20		°C
INTERNAL UNDERVOLTAGE LOCK OUT						
UVLO	Internal UVLO	V_{CC} falling	–2%	2.35	2%	V
$V_{(UVLO_HYST)}$	Internal UVLO comparator hysteresis			120		mV
VOLTAGE DETECTOR COMPARATORS						
	Comparator threshold (PWRFAIL_SNS, LOWBAT_SNS)	Falling threshold	–1%	1.0	1%	V
	Hysteresis		40	50	60	mV
	Propagation delay	25-mV overdrive			10	µs
POWER-GOOD						
$V_{(PGOODF)}$		VDCDC1, VDCDC2, VDCDC3, VLDO1, VLDO2, decreasing	–12%	–10%	–8%	
$V_{(PGOODR)}$		VDCDC1, VDCDC2, VDCDC3, VLDO1, VLDO2, increasing	–7%	–5%	–3%	

(2) The input voltage can go as high as 6 V. If the input voltage exceeds V_{CC}, an input current of ($V_{(PB_IN)}$ – 0.7 V – V_{CC}) / 10 kΩ flows.

Copyright © 2005–2016, Texas Instruments Incorporated

7.6 Electrical Characteristics: Supply Pins VCC, VINDCDC1, VINDCDC2, VINDCDC3

VINDCDC1 = VINDCDC2 = VINDCDC3 = VCC = VINLDO = 3.6 V, VBACKUP = 3 V, T_A = –40°C to 85°C (unless otherwise noted)

PARAMETER		TEST CONDITIONS		MIN	TYP(1)	MAX	UNIT
$I_{(qPFM)}$	Operating quiescent current, PFM	All 3 DCDC converters enabled, zero load and no switching, LDOs enabled	V_{CC} = 3.6 V, VBACKUP = 3 V; $V_{(VSYSIN)}$ = 0 V		85	100	µA
		All 3 DCDC converters enabled, zero load and no switching, LDOs enabled	V_{CC} = 3.6 V, VBACKUP = 3 V; $V_{(VSYSIN)}$ = 0 V		78	90	
		DCDC1 and DCDC2 converters enabled, zero load and no switching, LDOs off	V_{CC} = 3.6 V, VBACKUP = 3 V; $V_{(VSYSIN)}$ = 0 V		57	70	
		DCDC1 converter enabled, zero load and no switching, LDOs off	V_{CC} = 3.6 V, VBACKUP = 3 V; $V_{(VSYSIN)}$ = 0 V		43	55	
I_I	Current into VCC; PWM	All 3 DCDC converters enabled and running in PWM, LDOs off	V_{CC} = 3.6 V, VBACKUP = 3 V; $V_{(VSYSIN)}$ = 0 V		2	3	mA
		DCDC1 and DCDC2 converters enabled and running in PWM, LDOs off	V_{CC} = 3.6 V, VBACKUP = 3 V; $V_{(VSYSIN)}$ = 0 V		1.5	2.5	
		DCDC1 converter enabled and running in PWM, LDOs off	V_{CC} = 3.6 V, VBACKUP = 3 V; $V_{(VSYSIN)}$ = 0 V		0.85	2	
$I_{(q)}$	Quiescent current	All converters disabled, LDOs off	V_{CC} = 3.6 V, VBACKUP = 3 V; $V_{(VSYSIN)}$ = 0 V		23	33	µA
		All converters disabled, LDOs off	V_{CC} = 2.6 V, VBACKUP = 3 V; $V_{(VSYSIN)}$ = 0 V		3.5	5	µA
		All converters disabled, LDOs off	V_{CC} = 3.6 V, VBACKUP = 0 V; $V_{(VSYSIN)}$ = 0 V			43	µA

(1) Typical values are at T_A = 25°C

7.7 Electrical Characteristics: Supply Pins VBACKUP, VSYSIN, VRTC, VINLDO

VINDCDC1 = VINDCDC2 = VINDCDC3 = VCC = VINLDO = 3.6 V, VBACKUP = 3 V, T_A = –40°C to 85°C (unless otherwise noted)

PARAMETER		TEST CONDITIONS	MIN	TYP(1)	MAX	UNIT
VBACKUP, VSYSIN, VRTC						
$I_{(q)}$	Operating quiescent current	VBACKUP = 3 V, VSYSIN = 0 V; V_{CC} = 2.6 V, current into VBACKUP		20	33	µA
$I_{(SD)}$	Operating quiescent current	VBACKUP < V_VBACKUP, current into VBACKUP		2	3	µA
	VRTC LDO output voltage	VSYSIN = VBACKUP = 0 V, I_O = 0 mA		3		V
I_O	Output current for VRTC	VSYSIN < 2.57 V and VBACKUP < 2.57 V			20	mA
	VRTC short-circuit current limit	VRTC = GND; VSYSIN = VBACKUP = 0 V			100	mA
	Maximum output current at VRTC for RESPWRON = 1	VRTC > 2.6 V, V_{CC} = 3 V; VSYSIN = VBACKUP = 0 V	30			mA
V_O	Output voltage accuracy for VRTC	VSYSIN = VBACKUP = 0 V; I_O = 0 mA			±1%	
	Line regulation for VRTC	V_{CC} = VRTC + 0.5 V to 6.5 V, I_O = 5 mA			±1%	
	Load regulation VRTC	I_O = 1 mA to 20 mA; VSYSIN = VBACKUP = 0 V			±2%	
	Regulation time for VRTC	Load change from 10% to 90%		10		µs
I_{lkg}	Input leakage current at VSYSIN	VSYSIN < V_VSYSIN			2	µA
	$r_{DS(on)}$ of VSYSIN switch				12.5	Ω
	$r_{DS(on)}$ of VBACKUP switch				12.5	Ω
	Input voltage range at VBACKUP(2)		2.73		3.75	V
	Input voltage range at VSYSIN(2)		2.73		3.75	V

(1) Typical values are at T_A = 25°C
(2) Based on the requirements for the Intel PXA270 processor.

Copyright © 2005–2016, Texas Instruments Incorporated

Electrical Characteristics: Supply Pins VBACKUP, VSYSIN, VRTC, VINLDO (continued)

VINDCDC1 = VINDCDC2 = VINDCDC3 = VCC = VINLDO = 3.6 V, VBACKUP = 3 V, T_A = –40°C to 85°C (unless otherwise noted)

PARAMETER		TEST CONDITIONS	MIN	TYP(1)	MAX	UNIT
	VSYSIN threshold	VSYSIN falling	–3%	2.55	3%	V
	VSYSIN threshold	VSYSIN rising	–3%	2.65	3%	V
	VBACKUP threshold	VBACKUP falling	–3%	2.55	3%	V
	VBACKUP threshold	VBACKUP falling	–3%	2.65	3%	V
VINLDO						
$I_{(q)}$	Operating quiescent current	Current per LDO into VINLDO		16	30	µA
$I_{(SD)}$	Shutdown current	Total current for both LDOs into VINLDO, VLDO = 0 V		0.1	1	µA

7.8 Electrical Characteristics: VDCDC1 Step-Down Converter

VINDCDC1 = VINDCDC2 = VINDCDC3 = VCC = VINLDO = 3.6 V, VBACKUP = 3 V, T_A = –40°C to 85°C (unless otherwise noted)

PARAMETER			TEST CONDITIONS	MIN	TYP(1)	MAX	UNIT
V_I	Input voltage range, VINDCDC1			2.5		6	V
I_O	Maximum output current			1200			mA
$I_{(SD)}$	Shutdown supply current in VINDCDC1		DCDC1_EN = GND		0.1	1	µA
$r_{DS(on)}$	P-channel MOSFET on-resistance		VINDCDC1 = $V_{(GS)}$ = 3.6 V		125	261	mΩ
I_{lkg}	P-channel leakage current		VINDCDC1 = 6 V			2	µA
$r_{DS(on)}$	N-channel MOSFET on-resistance		VINDCDC1 = $V_{(GS)}$ = 3.6 V		130	260	mΩ
I_{lkg}	N-channel leakage current		$V_{(DS)}$ = 6 V		7	10	µA
	Forward current limit (P- and N-channel)		2.5 V < $V_{I(MAIN)}$ < 6 V	1.55	1.75	1.95	A
f_S	Oscillator frequency			1.3	1.5	1.7	MHz
	Fixed output voltage FPWMDCDC1=0	3 V	VINDCDC1 = 3.3 V to 6 V; 0 mA ≤ I_O ≤ 1.2 A	–2%		2%	
		3.3 V	VINDCDC1 = 3.6 V to 6 V; 0 mA ≤ I_O ≤ 1.2 A	–2%		2%	
	Fixed output voltage FPWMDCDC1=1	3 V	VINDCDC1 = 3.3 V to 6 V; 0 mA ≤ I_O ≤ 1.2 A	–1%		1%	
		3.3 V	VINDCDC1 = 3.6 V to 6 V; 0 mA ≤ I_O ≤ 1.2 A	–1%		1%	
	Adjustable output voltage with resistor divider at DEFDCDC1 FPWMDCDC1=0		VINDCDC1 = VDCDC1 +0.3 V (min 2.5 V) to 6 V; 0 mA ≤ I_O ≤ 1.2 A	–2%		2%	
	Adjustable output voltage with resistor divider at DEFDCDC1; FPWMDCDC1=1		VINDCDC1 = VDCDC1 +0.3 V (min 2.5 V) to 6 V; 0 mA ≤ I_O ≤ 1.2 A	–1%		1%	
	Line Regulation		VINDCDC1 = VDCDC1 + 0.3 V (min. 2.5 V) to 6 V; I_O = 10 mA		0%		V
	Load Regulation		I_O = 10 mA to 1200 mA		0.25%		A
	Soft-start ramp time		VDCDC1 ramping from 5% to 95% of target value		750		µs
	Internal resistance from L1 to GND				1		MΩ
	VDCDC1 discharge resistance				300		Ω

(1) Typical values are at T_A = 25°C

Copyright © 2005–2016, Texas Instruments Incorporated

7.9 Electrical Characteristics: VDCDC2 Step-Down Converter

VINDCDC1 = VINDCDC2 = VINDCDC3 = VCC = VINLDO = 3.6 V, VBACKUP = 3 V, T_A = –40°C to 85°C (unless otherwise noted)

PARAMETER			TEST CONDITIONS	MIN	TYP(1)	MAX	UNIT
V_I	Input voltage range, VINDCDC2			2.5		6	V
I_O	Maximum output current			1000			mA
$I_{(SD)}$	Shutdown supply current in VINDCDC2		DCDC2_EN = GND		0.1	1	µA
$r_{DS(on)}$	P-channel MOSFET on-resistance		VINDCDC2 = $V_{(GS)}$ = 3.6 V		140	300	mΩ
I_{lkg}	P-channel leakage current		VINDCDC2 = 6 V			2	µA
$r_{DS(on)}$	N-channel MOSFET on-resistance		VINDCDC2 = $V_{(GS)}$ = 3.6 V		150	297	mΩ
I_{lkg}	N-channel leakage current		$V_{(DS)}$ = 6 V		7	10	µA
I_{LIMF}	Forward current limit (P- and N-channel)		2.5 V < VINDCDC2 < 6 V	1.4	1.55	1.7	A
f_S	Oscillator frequency			1.3	1.5	1.7	MHz
	Fixed output voltage FPWMDCDC2=0	1.8 V	VINDCDC2 = 2.5 V to 6 V; 0 mA ≤ I_O ≤ 1 A	–2%		2%	
		2.5 V	VINDCDC2 = 2.8 V to 6 V; 0 mA ≤ I_O ≤ 1 A	–2%		2%	
	Fixed output voltage FPWMDCDC2=1	1.8 V	VINDCDC2 = 2.5 V to 6 V; 0 mA ≤ I_O ≤ 1 A	–2%		2%	
		2.5 V	VINDCDC2 = 2.8 V to 6 V; 0 mA ≤ I_O ≤ 1 A	–1%		1%	
	Adjustable output voltage with resistor divider at DEFDCDC2 FPWMDCDC2=0		VINDCDC2 = VDCDC2 +0.3 V (min 2.5 V) to 6 V; 0 mA ≤ I_O ≤ 1 A	–2%		2%	
	Adjustable output voltage with resistor divider at DEFDCDC2; FPWMDCDC2=1		VINDCDC2 = VDCDC2 +0.3 V (min 2.5 V) to 6 V; 0 mA ≤ I_O ≤ 1 A	–1%		1%	
	Line Regulation		VINDCDC2 = VDCDC2 + 0.3 V (min. 2.5 V) to 6 V; I_O = 10 mA		0%		V
	Load Regulation		I_O = 10 mA to 1 mA		0.25%		A
	Soft-start ramp time		VDCDC2 ramping from 5% to 95% of target value		750		µs
	Internal resistance from L2 to GND				1		MΩ
	VDCDC2 discharge resistance				300		Ω

(1) Typical values are at T_A = 25°C

7.10 Electrical Characteristics: VDCDC3 Step-Down Converter

VINDCDC1 = VINDCDC2 = VINDCDC3 = VCC = VINLDO = 3.6 V, VBACKUP = 3 V, T_A = –40°C to 85°C (unless otherwise noted)

PARAMETER			TEST CONDITIONS	MIN	TYP(1)	MAX	UNIT
V_I	Input voltage range, VINDCDC3			2.5		6	V
I_O	Maximum output current			800			mA
$I_{(SD)}$	Shutdown supply current in VINDCDC3		DCDC3_EN = GND		0.1	1	µA
$r_{DS(on)}$	P-channel MOSFET on-resistance		VINDCDC3 = $V_{(GS)}$ = 3.6 V		310	698	mΩ
I_{lkg}	P-channel leakage current		VINDCDC3 = 6 V		0.1	2	µA
$r_{DS(on)}$	N-channel MOSFET on-resistance		VINDCDC3 = $V_{(GS)}$ = 3.6 V		220	503	mΩ
I_{lkg}	N-channel leakage current		$V_{(DS)}$ = 6 V		7	10	µA
	Forward current limit (P- and N-channel)		2.5 V < VINDCDC3 < 6 V	1.05	1.2	1.35	A
f_S	Oscillator frequency			1.3	1.5	1.7	MHz
	Fixed output voltage FPWMDCDC3=0	All VDCDC3	VINDCDC3 = 2.5 V to 6 V; 0 mA ≤ I_O ≤ 600 mA	–2%		2%	
	Fixed output voltage FPWMDCDC3=1		VINDCDC3 = 2.5 V to 6 V; 0 mA ≤ I_O ≤ 600 mA	–1%		1%	

(1) Typical values are at T_A = 25°C

Electrical Characteristics: VDCDC3 Step-Down Converter (continued)

VINDCDC1 = VINDCDC2 = VINDCDC3 = VCC = VINLDO = 3.6 V, VBACKUP = 3 V, T_A = –40°C to 85°C (unless otherwise noted)

PARAMETER		TEST CONDITIONS	MIN	TYP(1)	MAX	UNIT
	Adjustable output voltage with resistor divider at DEFDCDC3 FPWMDCDC3=0	VINDCDC3 = VDCDC3 +0.4 V (min 2.5 V) to 6 V; 0 mA ≤ I_O ≤ 600 mA	–2%		2%	
	Adjustable output voltage with resistor divider at DEFDCDC3; FPWMDCDC3=1	VINDCDC3 = VDCDC3 +0.4 V (min 2.5 V) to 6 V; 0 mA ≤ I_O ≤ 600 mA	–1%		1%	
	Line Regulation	VINDCDC3 = VDCDC3 + 0.3 V (min. 2.5 V) to 6 V; I_O = 10 mA		0%		V
	Load Regulation	I_O = 10 mA to 400 mA		0.25%		A
	Soft-start ramp time	VDCDC3 ramping from 5% to 95% of target value		750		µs
	Internal resistance from L3 to GND			1		MΩ
	VDCDC3 discharge resistance			300		Ω

7.11 Timing Requirements

over operating free-air temperature range (unless otherwise noted)

		MIN	MAX	UNIT
f_{MAX}	Clock frequency		400	kHz
$t_{wH(HIGH)}$	Clock high time	600		ns
$t_{wL(LOW)}$	Clock low time	1300		ns
t_R	DATA and CLK rise time		300	ns
t_F	DATA and CLK fall time		300	ns
$t_{h(STA)}$	Hold time (repeated) START condition (after this period the first clock pulse is generated)	600		ns
$t_{h(DATA)}$	Setup time for repeated START condition	600		ns
$t_{h(DATA)}$	Data input hold time	300		ns
$t_{su(DATA)}$	Data input setup time	300		ns
$t_{su(STO)}$	STOP condition setup time	600		ns
$t_{(BUF)}$	Bus free time	1300		ns

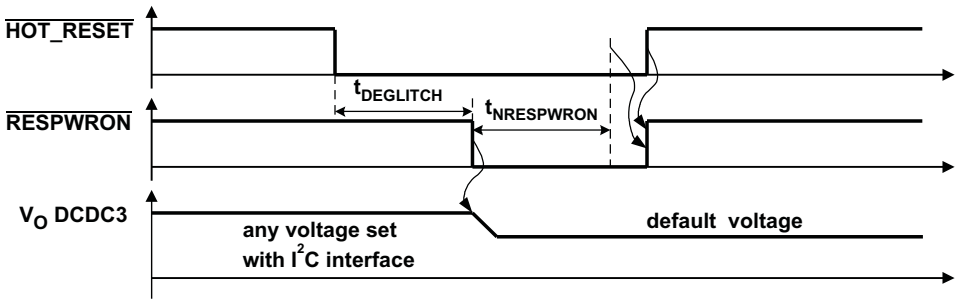

Figure 1. HOT_RESET Timing

Copyright © 2005–2016, Texas Instruments Incorporated

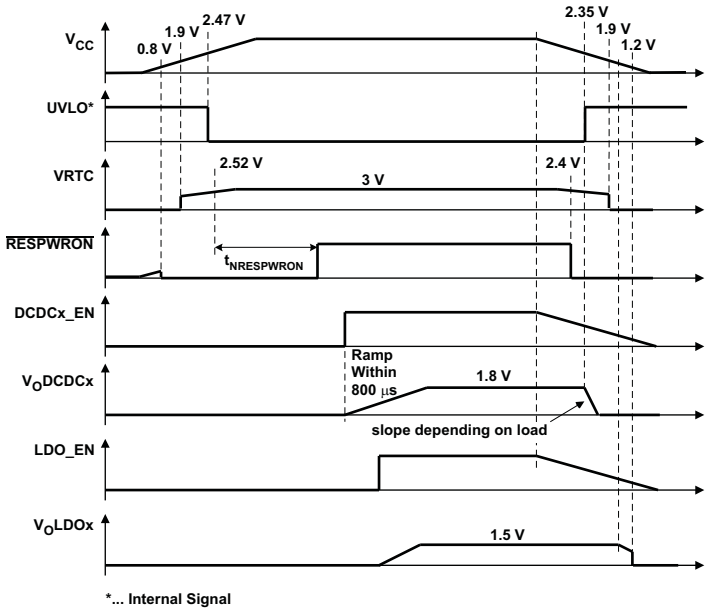

Figure 2. Power-Up and Power-Down Timing

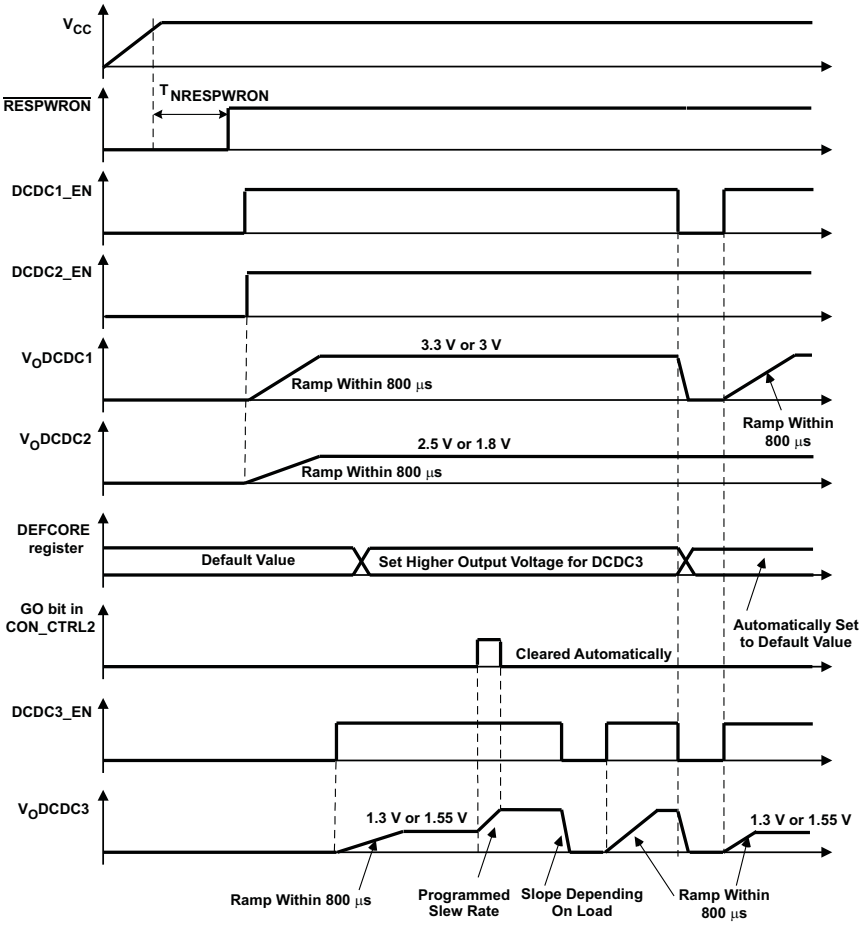

Figure 3. DVS Timing

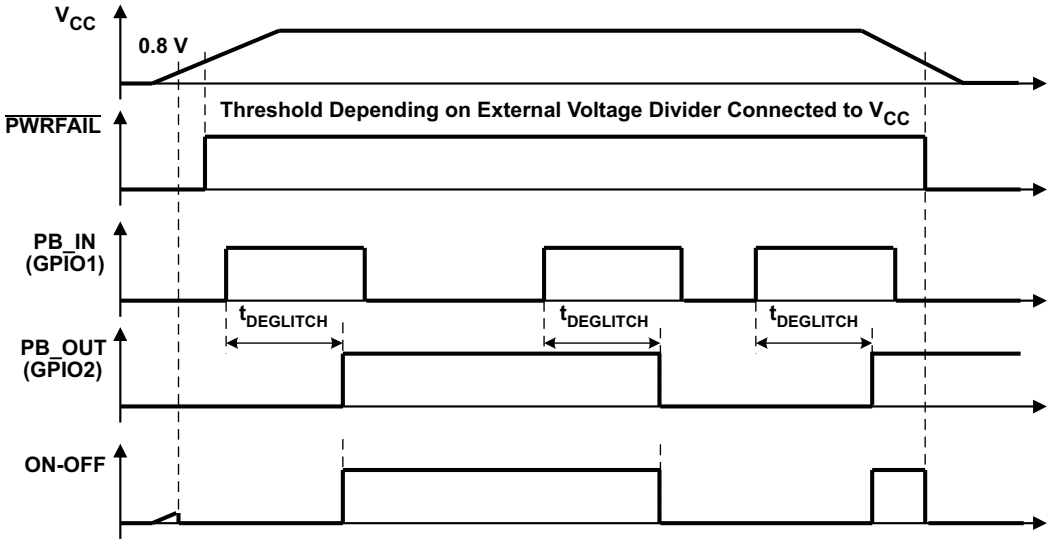

Figure 4. PB-ON-OFF Timing

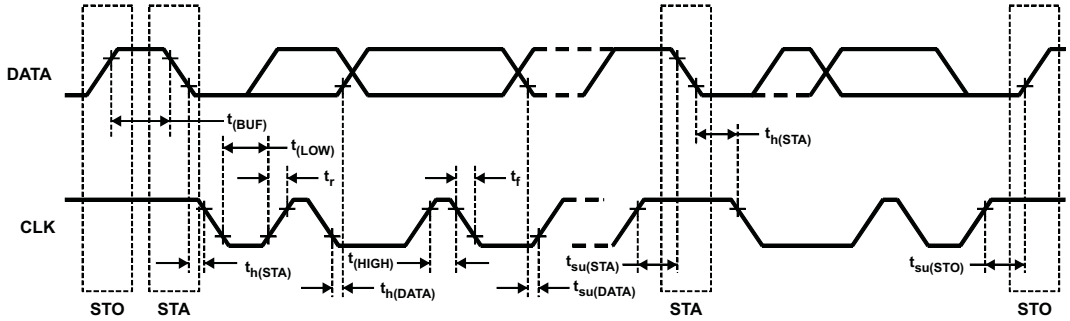

Figure 5. Serial I/F Timing

Copyright © 2005–2016, Texas Instruments Incorporated

7.12 Typical Characteristics

Table 1. Table of Graphs

		FIGURE
η	Efficiency vs Output current	Figure 6, Figure 7, Figure 8, Figure 9, Figure 10, Figure 11, Figure 12
	Line transient response	Figure 13, Figure 14, Figure 15
	Load transient response	Figure 16, Figure 17, Figure 18
	VDCDC2 PFM operation	Figure 19
	VDCDC2 low ripple PFM operation	Figure 20
	VDCDC2 PWM operation	Figure 21
	Startup VDCDC1, VDCDC2 and VDCDC3	Figure 22
	Startup LDO1 and LDO2	Figure 23
	Line transient response	Figure 24, Figure 25, Figure 26
	Load transient response	Figure 27, Figure 28, Figure 29

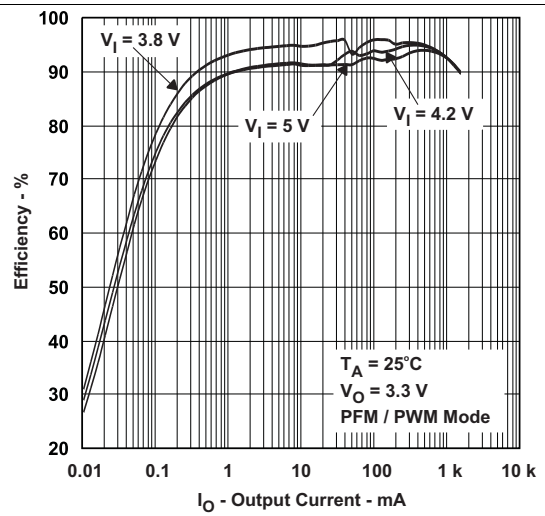

Figure 6. DCDC1: Efficiency vs Output Current

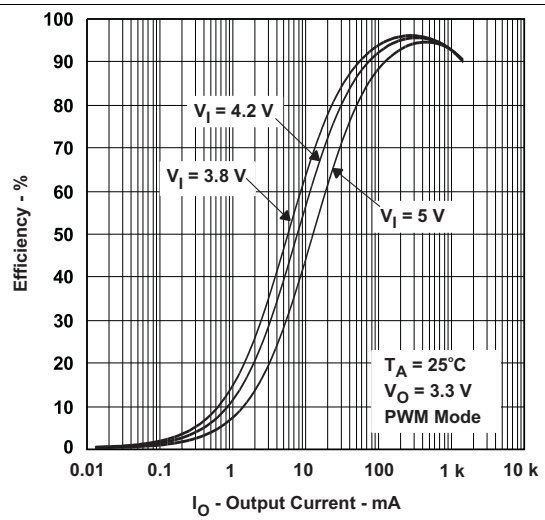

Figure 7. DCDC1: Efficiency vs Output Current

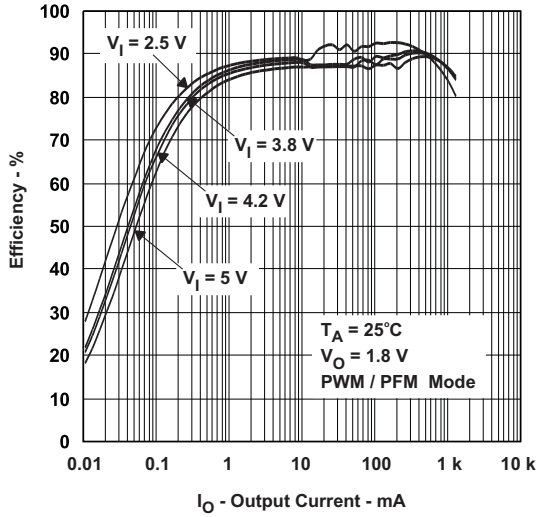

Figure 8. DCDC2: Efficiency vs Output Current

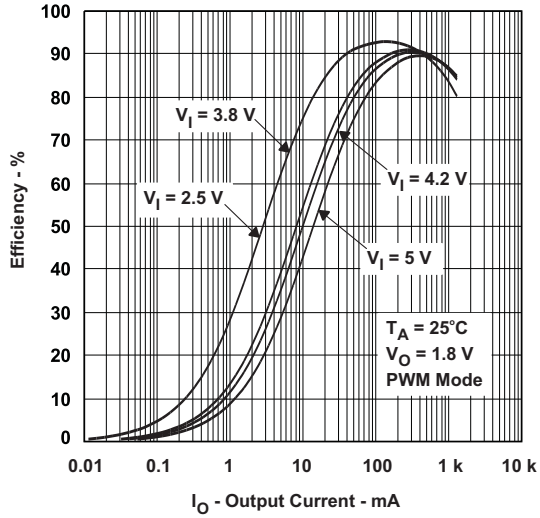

Figure 9. DCDC2: Efficiency vs Output Current

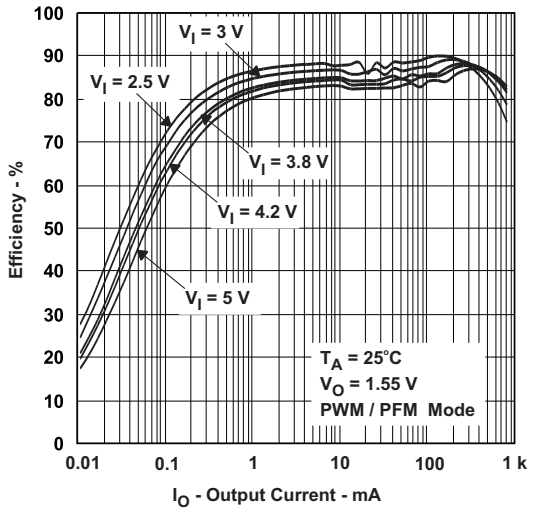

Figure 10. DCDC3: Efficiency vs Output Current

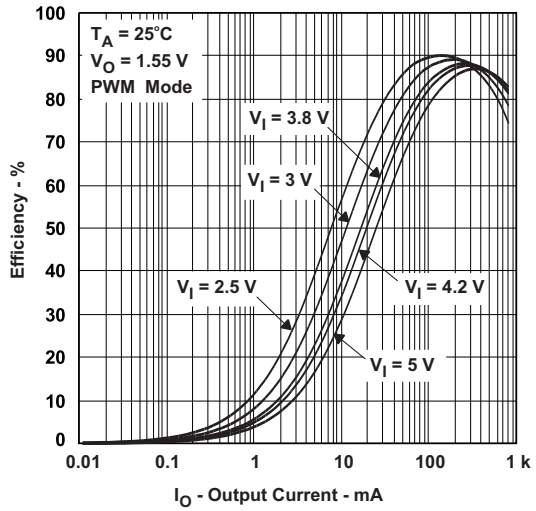

Figure 11. DCDC3: Efficiency vs Output Current

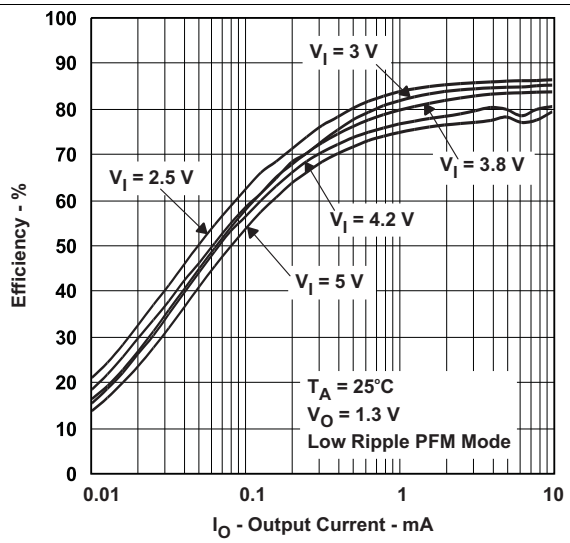

Figure 12. DCDC3: Efficiency vs Output Current

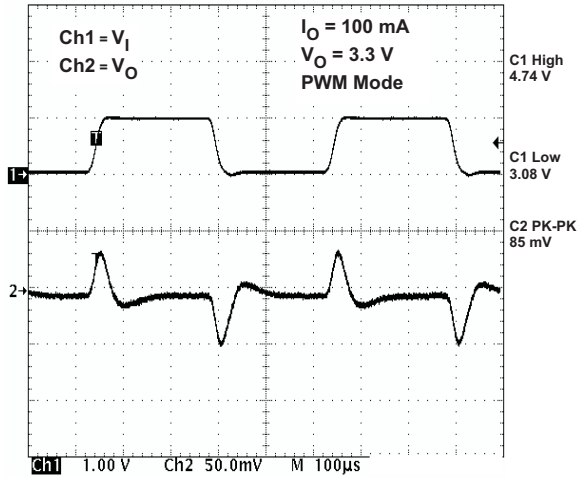

Figure 13. VDCDC1 Line Transient Response

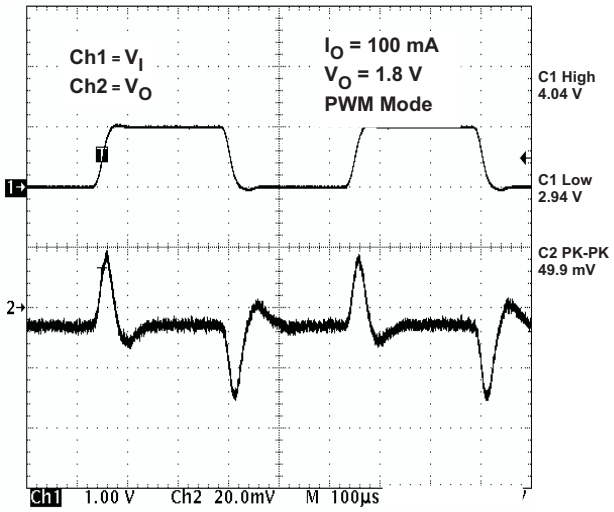

Figure 14. VDCDC2 Line Transient Response

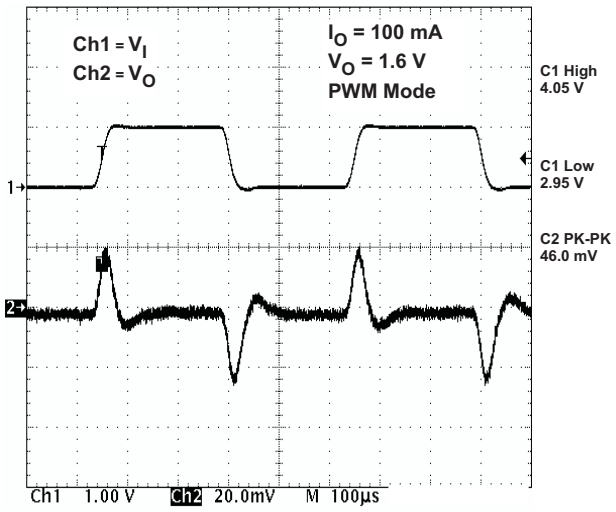

Figure 15. VDCDC3 Line Transient Response

Copyright © 2005–2016, Texas Instruments Incorporated

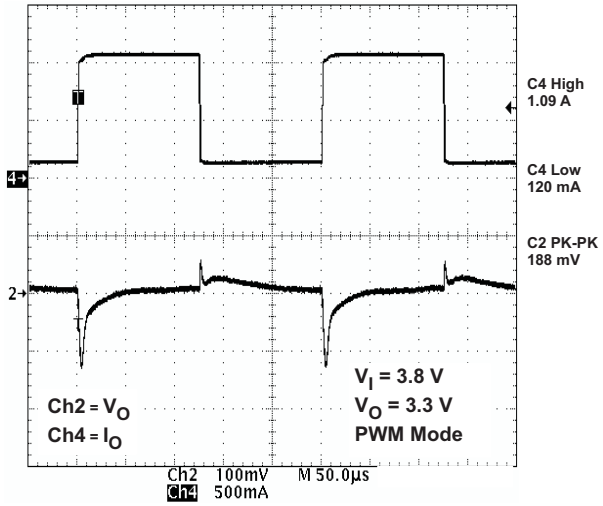

Figure 16. VDCDC1 Load Transient Response

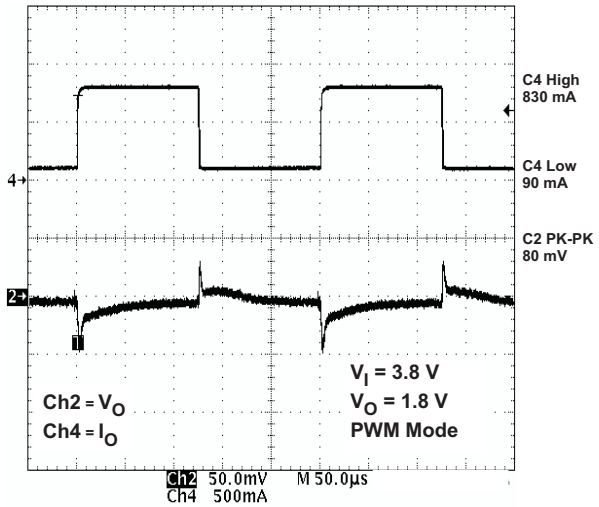

Figure 17. VDCDC2 Load Transient Response

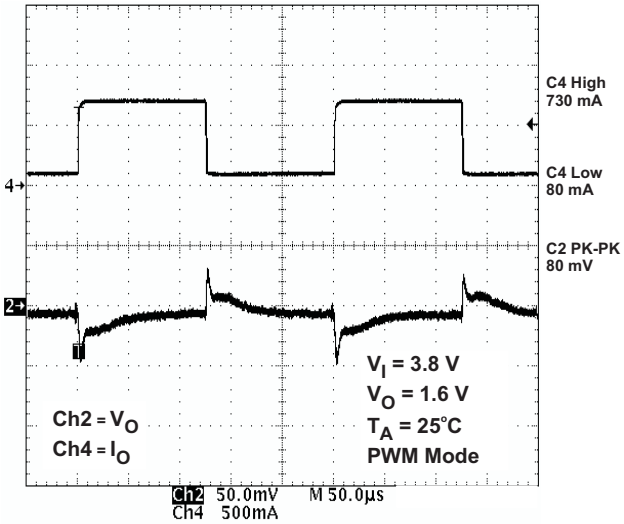

Figure 18. VDCDC3 Load Transient Response

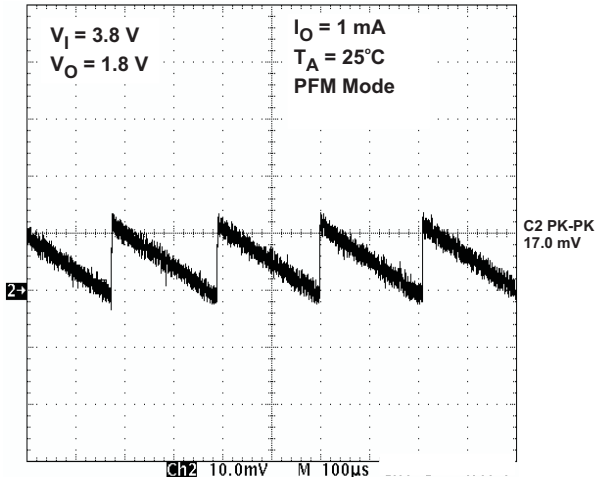

Figure 19. VDCDC2 Output Voltage Ripple

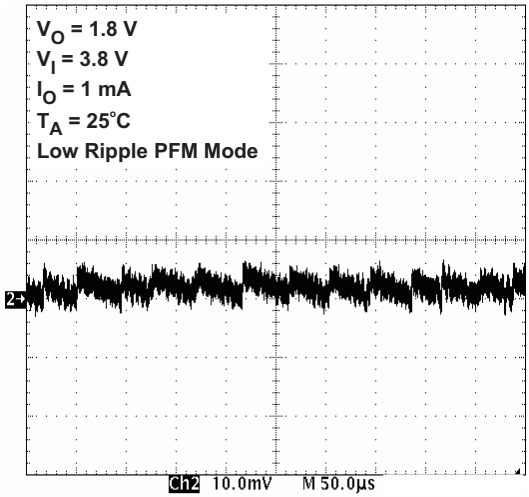

Figure 20. VDCDC2 Output Voltage Ripple

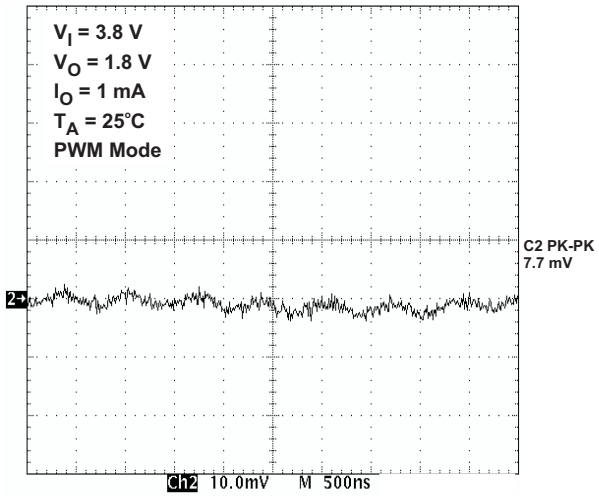

Figure 21. VDCDC2 Output Voltage Ripple

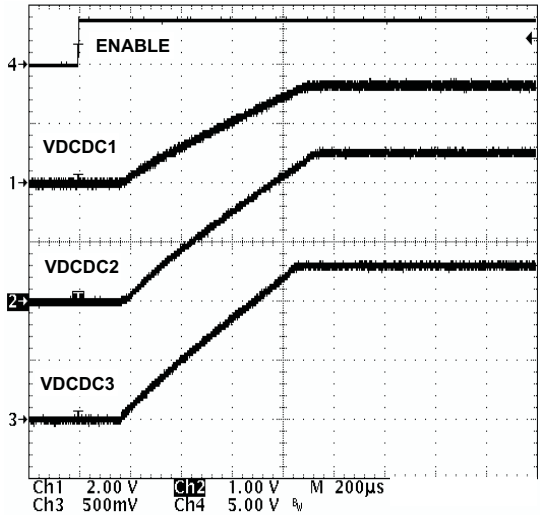

Figure 22. Startup VDCDC1, VDCDC2, and VDCDC3

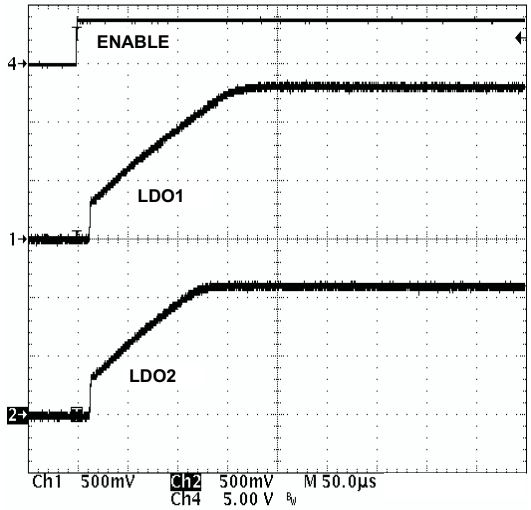

Figure 23. Startup LDO1 and LDO2

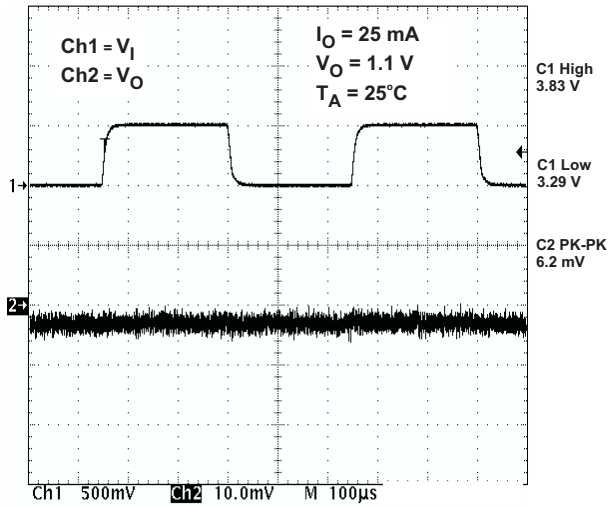

Figure 24. LDO1 Line Transient Response

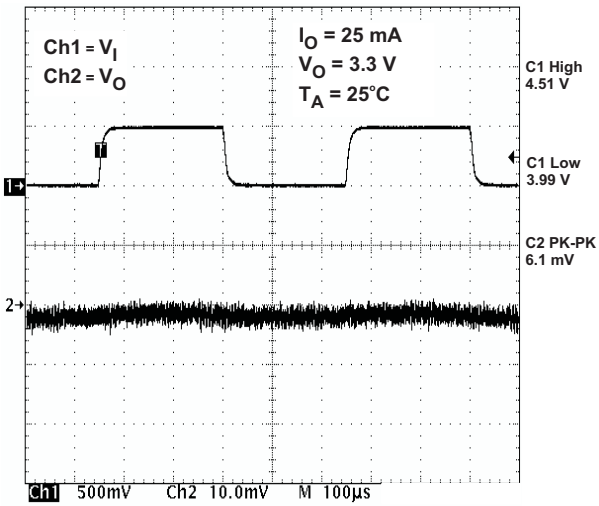

Figure 25. LDO2 Line Transient Response

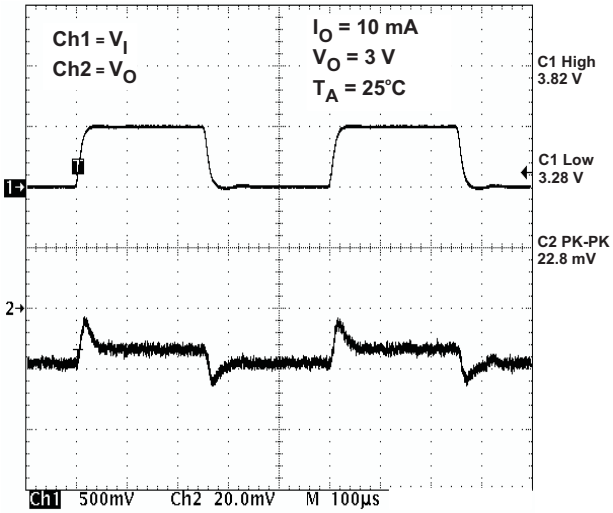

Figure 26. VRTC Line Transient Response

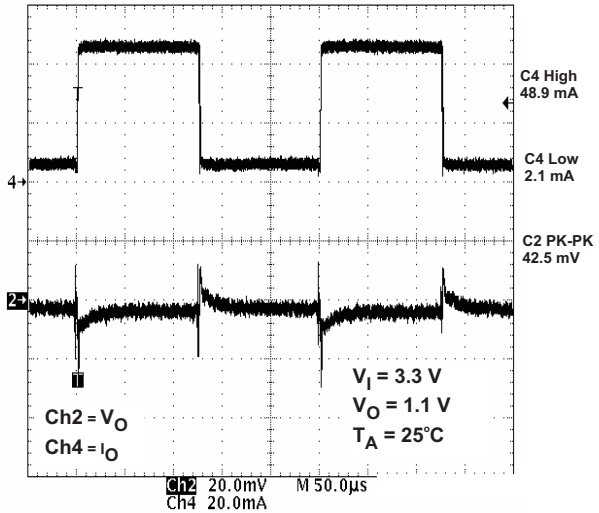

Figure 27. LDO1 Load Transient Response

Copyright © 2005–2016, Texas Instruments Incorporated

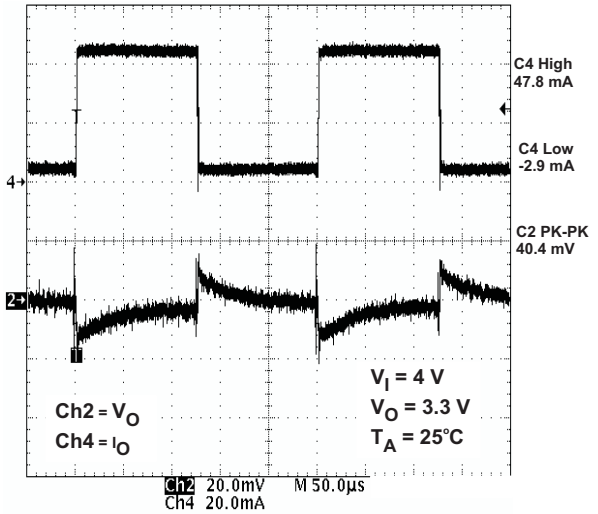

Figure 28. LDO2 Load Transient Response

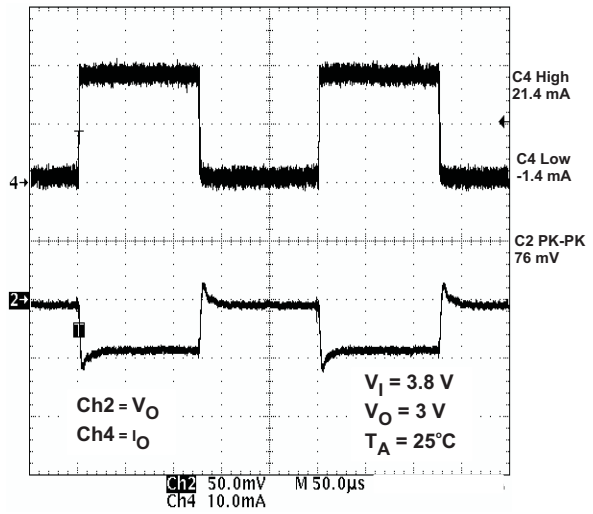

Figure 29. VRTC Load Transient Response

8 Detailed Description

8.1 Overview

TPS65020 has 5 regulator channels, 3 DCDCs and 2 LDOs. DCDC3 has a dynamic voltage scaling feature, DVS, that allows for power reduction to CORE supplies during idle operation or over voltage during heavy duty operation. With DVS and 2 more DCDCs plus 2 LDOs, the TPS65020 is ideal for CORE, Memory, IO, and peripheral power for the entire system of a wide range of suitable applications.

The device incorporates enables for the DCDCs and LDOs, I^2C for device control, pushbutton and a reset interface that complete the system and allow for the TPS65020 to be adapted for different kinds of processors or FPGAs.

For noise-sensitive circuits, the DCDCs can be synchronized out of phase from one another, reducing the peak noise at the switching frequency. Each converter can be forced to operate in PWM mode to ensure constant switching frequency across the entire load range. However, for low load efficiency performance the DCDCs automatically enter PSM mode which reduces the switching frequency when the load current is low, saving power at idle operation.

Copyright © 2005–2016, Texas Instruments Incorporated

8.2 Functional Block Diagram

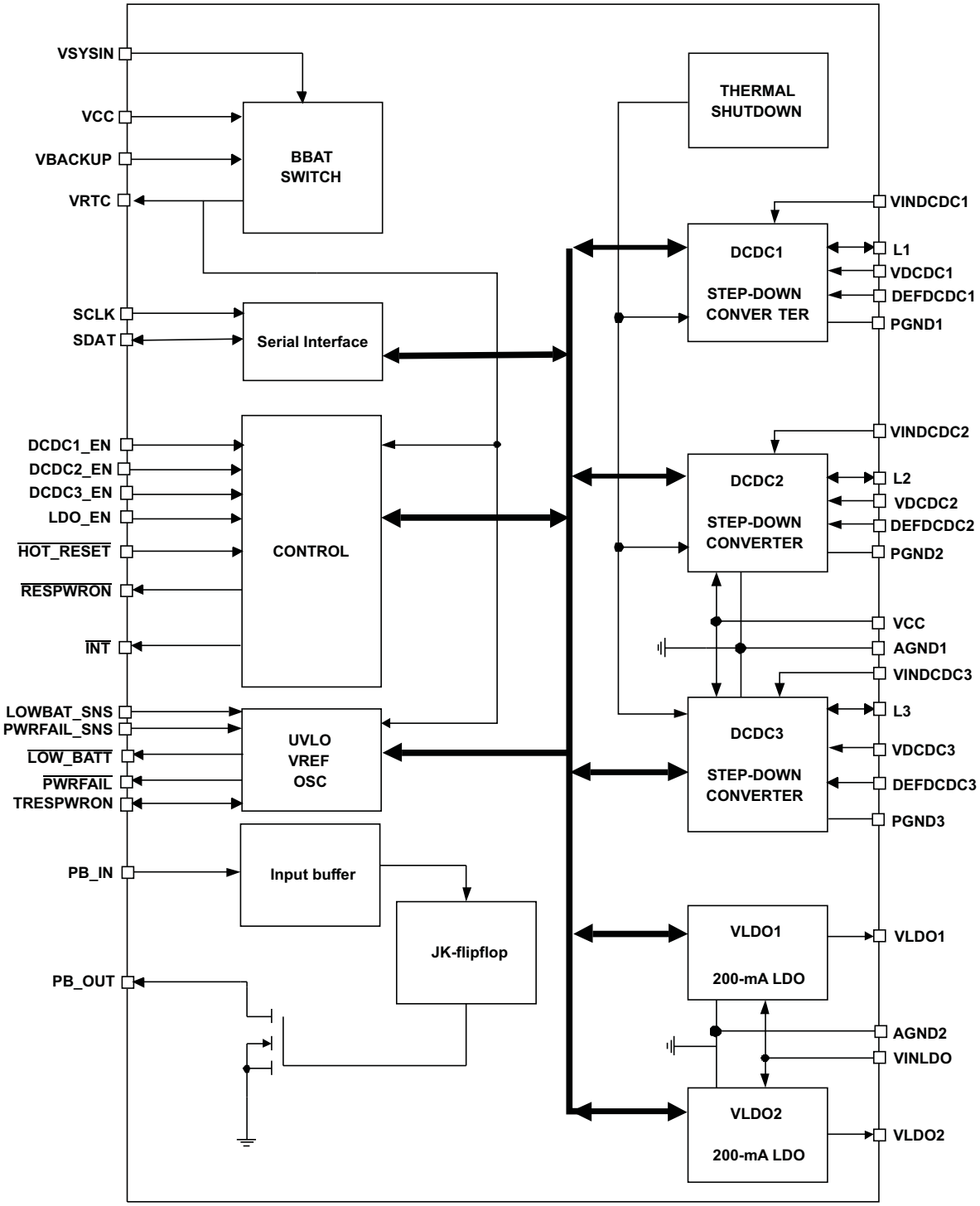

8.3 Feature Description

8.3.1 VRTC Output and Operation With or Without Backup Battery

The VRTC pin is an always-on output, intended to supply up to 20 mA to a permanently required rail. This is the VCC_BATT rail of the Intel PXA270 Bulverde processor for example.

In applications using a backup battery, the backup voltage can be either directly connected to the TPS65020 VBACKUP pin if a Li-Ion cell is used, or through a boost converter (for example, TPS61070) if a single NiMH battery is used. The voltage applied to the VBACKUP pin is fed through a PMOS switch to the VRTC pin. The TPS65020 asserts the $\overline{\text{RESPWRON}}$ signal if VRTC drops below 2.4 V. This, together with 250 mV at 20-mA dropout for the PMOS switch means that the voltage applied at VBACKUP must be greater than 2.65 V for normal system operation.

When the voltage at the VSYSIN pin exceeds 2.65 V, the path from VBACKUP to VRTC is cut, and VRTC is supplied by a similar PMOS switch from the voltage source connected to the VSYSIN input. Typically this is the VDCDC1 converter but can be any voltage source within the appropriate range.

In systems where no backup battery is used, the VBACKUP pin is connected to GND. In this case, a low power LDO is enabled, supplied from V_{CC} and capable of delivering 20 mA to the 3-V output. This LDO is disabled if the voltage at the VSYSIN input exceeds 2.65 V. VRTC is then supplied from the external source connected to this pin as previously described.

Inside TPS65020 there is a switch (Vmax switch) which selects the higher voltage between V_{CC} and VBACKUP. This is used as the supply voltage for some basic functions. The functions powered from the output of the Vmax switch are:

- $\overline{\text{INT}}$ output
- $\overline{\text{RESPWRON}}$ output
- $\overline{\text{HOT_RESET}}$ input
- $\overline{\text{LOW_BATT}}$ output
- $\overline{\text{PWRFAIL}}$ output
- Enable pins for DC-DC converters, LDO1 and LDO2
- Undervoltage lockout comparator (UVLO)
- Reference system with low frequency timing oscillators
- $\overline{\text{LOW_BATT}}$ and $\overline{\text{PWRFAIL}}$ comparators

PB-IN, PB-OUT, the main 1.5-MHz oscillator, and the I^2C interface are only powered from V_{CC}.

Copyright © 2005–2016, Texas Instruments Incorporated

Feature Description (continued)

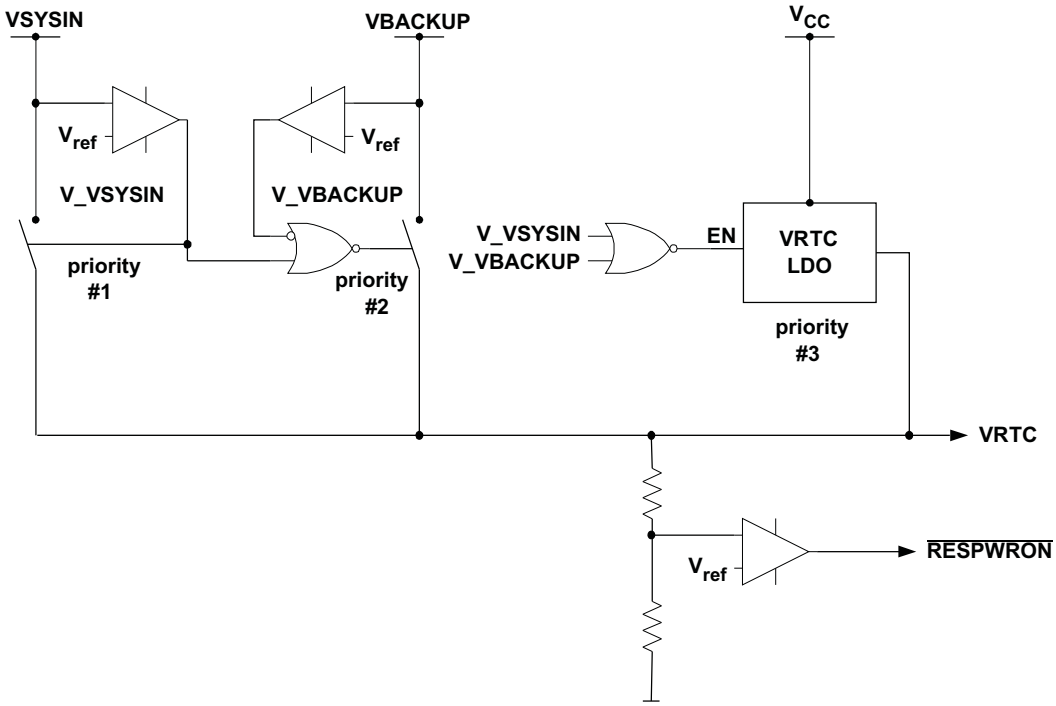

V_VSYSIN, V_VBACKUP thresholds: falling = 2.55 V, rising = 2.65 V ±3%

$\overline{\text{RESPWRON}}$ thresholds: falling = 2.4 V, rising = 2.52 V ±3%

Figure 30. RTC and nRESPWRON

8.3.2 Step-Down Converters, VDCDC1, VDCDC2, and VDCDC3

The TPS65020 incorporates three synchronous step-down converters operating typically at 1.5-MHz fixed-frequency pulse width modulation (PWM) at moderate to heavy load currents. At light-load currents, the converters automatically enter the power save mode (PSM), and operate with pulse frequency modulation (PFM). The VDCDC1 converter is capable of delivering 1.2-A output current, the VDCDC2 converter is capable of delivering 1 A and the VDCDC3 converter is capable of delivering up to 800 mA.

The converter output voltages can be programmed through the DEFDCDC1, DEFDCDC2, and DEFDCDC3 pins. The pins can either be connected to GND, VCC, or to a resistor divider between the output voltage and GND. The VDCDC1 converter defaults to 3 V or 3.3 V depending on the DEFDCDC1 configuration pin. If DEFDCDC1 is tied to ground, the default is 3 V. If it is tied to VCC, the default is 3.3 V. When the DEFDCDC1 pin is connected to a resistor divider, the output voltage can be set in the range of 0.6 V to VINDCDC1 V. See the *Application Information* section for more details.

The VDCDC2 converter defaults to 1.8 V or 2.5 V depending on the DEFDCDC2 configuration pin. If DEFDCDC2 is tied to ground, the default is 1.8 V. If it is tied to VCC, the default is 2.5 V. When the DEFDCDC2 pin is connected to a resistor divider, the output voltage can be set in the range of 0.6 V to VINDCDC2 V.

The VDCDC3 converter defaults to 1.3 V or 1.55 V depending on the DEFDCDC3 configuration pin. If DEFDCDC3 is tied to ground the default is 1.3 V. If it is tied to VCC, the default is 1.55 V. When the DEFDCDC3 pin is connected to a resistor divider, the output voltage can be set in the range of 0.6 V to VINDCDC3 V. The core voltage can be reprogrammed through the serial interface in the range of 0.8 V to 1.6 V with a programmable slew rate. The converter is forced into PWM operation whilst any programmed voltage change is underway, whether the voltage is being increased or decreased. The DEFCORE and DEFSLEW registers are used to program the output voltage and slew rate during voltage transitions.

Feature Description (continued)

The step-down converter outputs (when enabled) are monitored by power-good (PG) comparators, the outputs of which are available through the serial interface. The outputs of the DC-DC converters can be optionally discharged through on-chip 300-Ω resistors when the DC-DC converters are disabled. This feature can be enabled using the I^2C interface.

During PWM operation, the converters use a unique fast response voltage mode controller scheme with input voltage feedforward to achieve good line and load regulation allowing the use of small ceramic input and output capacitors. At the beginning of each clock cycle initiated by the clock signal, the P-channel MOSFET switch is turned on. The inductor current ramps up until the comparator trips and the control logic turns off the switch. The current limit comparator also turns off the switch if the current limit of the P-channel switch is exceeded. After the adaptive dead-time used to prevent shoot through current, the N-channel MOSFET rectifier is turned on, and the inductor current ramps down. The next cycle is initiated by the clock signal, again turning off the N-channel rectifier and turning on the P-channel switch.

The three DC-DC converters operate synchronized to each other with the VDCDC1 converter as the master. A 180° phase shift between the VDCDC1 switch turn on and the VDCDC2 and a further 90° shift to the VDCDC3 switch turn on decreases the input RMS current and smaller input capacitors can be used. This is optimized for a typical application where the VDCDC1 converter regulates a Li-Ion battery voltage of 3.7 V to 3.3 V, the VDCDC2 converter from 3.7 V to 2.5 V, and the VDCDC3 converter from 3.7 V to 1.5 V. The phase of the three converters can be changed using the CON_CTRL register.

8.3.3 Power Save Mode Operation

As the load current decreases, the converters enter the power save mode operation. During PSM, the converters operate in a burst mode (PFM mode) with a frequency between 750 kHz and 1.5 MHz, nominal for one burst cycle. However, the frequency between different burst cycles depends on the actual load current and is typically far less than the switching frequency with a minimum quiescent current to maintain high efficiency.

To optimize the converter efficiency at light load, the average current is monitored and if in PWM mode the inductor current remains below a certain threshold, then PSM is entered. The typical threshold to enter PSM is calculated using the equations in Equation 1, Equation 2, and Equation 3.

$$I_{PFMDCDC1}\ enter = \frac{VINDCDC1}{24\ \Omega} \tag{1}$$

$$I_{PFMDCDC2}\ enter = \frac{VINDCDC2}{26\ \Omega} \tag{2}$$

$$I_{PFMDCDC3}\ enter = \frac{VINDCDC3}{39\ \Omega} \tag{3}$$

During the PSM the output voltage is monitored with a comparator, and by maximum skip burst width. As the output voltage falls below the threshold, set to the nominal V_O, the P-channel switch turns on and the converter effectively delivers a constant current defined using the equations in Equation 4, Equation 5, and Equation 6.

$$I_{PFMDCDC1}\ leave = \frac{VINDCDC1}{18\ \Omega} \tag{4}$$

$$I_{PFMDCDC2}\ leave = \frac{VINDCDC2}{20\ \Omega} \tag{5}$$

$$I_{PFMDCDC3}\ leave = \frac{VINDCDC3}{29\ \Omega} \tag{6}$$

If the load is below the delivered current then the output voltage rises until the same threshold is crossed in the other direction. All switching activity ceases, reducing the quiescent current to a minimum until the output voltage has again dropped below the threshold. The power save mode is exited, and the converter returns to PWM mode if either of the following conditions are met:

1. the output voltage drops 2% below the nominal V_O due to increasing load current
2. the PFM burst time exceeds 16 × 1 / fs (10.67 µs typical).

Copyright © 2005–2016, Texas Instruments Incorporated

Feature Description (continued)

These control methods reduce the quiescent current to typically 14 µA per converter, and the switching activity to a minimum, thus achieving the highest converter efficiency. Setting the comparator thresholds at the nominal output voltage at light-load current results in a low output voltage ripple. The ripple depends on the comparator delay and the size of the output capacitor. Increasing capacitor values makes the output ripple tend to zero. The PSM is disabled through the I^2C interface to force the individual converters to stay in fixed-frequency PWM mode.

8.3.4 Low Ripple Mode

Setting Bit 3 in register CON-CTRL to 1 enables the low ripple mode for all of the DC-DC converters if operated in PFM mode. For an output current less than approximately 10 mA, the output voltage ripple in PFM mode is reduced, depending on the actual load current. The lower the actual output current on the converter, the lower the output ripple voltage. For an output current above 10 mA, there is only minor difference in output voltage ripple between PFM mode and low ripple PFM mode. As this feature also increases switching frequency, it is used to keep the switching frequency above the audible range in PFM mode down to a low output current.

8.3.5 Soft-Start

Each of the three converters has an internal soft-start circuit that limits the inrush current during start-up. The soft-start is realized by using a very low current to initially charge the internal compensation capacitor. The soft-start time is typically 750 µs if the output voltage ramps from 5% to 95% of the final target value. If the output is already precharged to some voltage when the converter is enabled, then this time is reduced proportionally. There is a short delay of typically 170 µs between the converter being enabled and switching activity starting. The delay allows the converter to bias itself properly, to recognize if the output is precharged, and if so to prevent discharging of the output while the internal soft-start ramp catches up with the output voltage.

8.3.6 100% Duty Cycle Low-Dropout Operation

The TPS65020 converters offer a low input to output voltage difference while still maintaining operation with the use of the 100% duty cycle mode. In this mode the P-channel switch is constantly turned on. This is particularly useful in battery-powered applications to achieve longest operation time by taking full advantage of the whole battery voltage range. The minimum input voltage required to maintain DC regulation depends on the load current and output voltage. It is calculated in Equation 7.

$$Vin_{min} = Vout_{min} + Iout_{max} \times \left(r_{DS(on)} + R_L\right) \quad (7)$$

where

- $Iout_{max}$ = maximum load current (Note: ripple current in the inductor is zero under these conditions)
- $r_{DS(on)}max$ = maximum P-channel switch $r_{DS(on)}$
- R_L = DC resistance of the inductor
- $Vout_{min}$ = nominal output voltage minus 2% tolerance limit

8.3.7 Active Discharge When Disabled

When the VDCDC1, VDCDC2, and VDCDC3 converters are disabled, due to an UVLO, DCDCx_EN, or OVERTEMP condition, it is possible to actively pull down the outputs. This feature is disabled per default and is individually enabled through the CON_CTRL2 register in the serial interface. When this feature is enabled, the VDCDC1, VDCDC2, and VDCDC3 outputs are discharged by a 300-Ω (typical) load which is active as long as the converters are disabled.

8.3.8 Power-Good Monitoring

All three step-down converters and both the LDO1 and LDO2 linear regulators have power-good comparators. Each comparator indicates when the relevant output voltage has dropped 10% below its target value with 5% hysteresis. The outputs of these comparators are available in the PGOODZ register through the serial interface. An interrupt is generated when any voltage rail drops below the 10% threshold. The comparators are disabled when the converters are disabled and the relevant PGOODZ register bits indicate that power is good.

Copyright © 2005–2016, Texas Instruments Incorporated

Feature Description (continued)

8.3.9 Low-Dropout Voltage Regulators

The low-dropout voltage regulators are designed to operate well with low-value ceramic input and output capacitors. They operate with input voltages down to 1.5 V. The LDOs offer a maximum dropout voltage of 300 mV at rated output current. Each LDO supports a current limit feature. Both LDOs are enabled by the LDO_EN pin, both LDOs can be disabled or programmed through the serial interface using the REG_CTRL and LDO_CTRL registers. The LDOs also have reverse conduction prevention. This allows the possibility to connect external regulators in parallel in systems with a backup battery. The TPS65020 step-down and LDO voltage regulators automatically power down when the V_{CC} voltage drops below the UVLO threshold or when the junction temperature rises above 160°C.

8.3.10 Undervoltage Lockout

The undervoltage lockout circuit for the five regulators on the TPS65020 prevents the device from malfunctioning at low-input voltages and from excessive discharge of the battery. It disables the converters and LDOs. The UVLO circuit monitors the VCC pin, the threshold is set internally to 2.35 V with 5% (120 mV) hysteresis. Note that when any of the DC-DC converters are running, there is an input current at the VCC pin, which is up to 3 mA when all three converters are running in PWM mode. This current must be taken into consideration if an external RC filter is used at the VCC pin to remove switching noise from the TPS65020 internal analog circuitry supply.

8.3.11 Power-Up Sequencing

The TPS65020 power-up sequencing is designed to be entirely flexible and customer driven. This is achieved by providing separate enable pins for each switch-mode converter, and a common enable signal for the LDOs. The relevant control pins are described in Table 2.

Table 2. Control Pins and Status Outputs for DC-DC Converters

PIN NAME	INPUT OUTPUT	FUNCTION
DEFDCDC3	I	Defines the default voltage of the VDCDC3 switching converter. DEFDCDC3 = 0 defaults VDCDC3 to 1.3 V, DEFDCDC3 = VCC defaults VDCDC3 to 1.55 V.
DEFDCDC2	I	Defines the default voltage of the VDCDC2 switching converter. DEFDCDC2 = 0 defaults VDCDC2 to 1.8 V, DEFDCDC2 = VCC defaults VDCDC2 to 2.5 V.
DEFDCDC1	I	Defines the default voltage of the VDCDC1 switching converter. DEFDCDC1 = 0 defaults VDCDC1 to 3 V, DEFDCDC1 = VCC defaults VDCDC1 to 3.3 V.
DCDC3_EN	I	Set DCDC3_EN = 0 to disable and DCDC3_EN = 1 to enable the VDCDC3 converter
DCDC2_EN	I	Set DCDC2_EN = 0 to disable and DCDC2_EN = 1 to enable the VDCDC2 converter
DCDC1_EN	I	Set DCDC1_EN = 0 to disable and DCDC1_EN = 1 to enable the VDCDC1 converter
$\overline{\text{HOT_RESET}}$	I	The $\overline{\text{HOT_RESET}}$ pin generates a reset ($\overline{\text{RESPWRON}}$) for the processor.$\overline{\text{HOT_RESET}}$ does not alter any TPS65020 settings except the output voltage of VDCDC3. Activating $\overline{\text{HOT_RESET}}$ sets the voltage of VDCDC3 to its default value defined with the DEFDCDC3 pin. A 1-MΩ pullup resistor to VCC is integrated in TPS65020. $\overline{\text{HOT_RESET}}$ is internally de-bounced by the TPS65020.
$\overline{\text{RESPWRON}}$	O	$\overline{\text{RESPWRON}}$ is held low when power is initially applied to the TPS65020. The VRTC voltage is monitored: $\overline{\text{RESWPRON}}$ is low when VRTC < 2.4 V and remains low for a time defined by the external capacitor at the TRESPWRON pin. $\overline{\text{RESPWRON}}$ can also be forced low by activation of the $\overline{\text{HOT_RESET}}$ pin.
TRESPWRON	I	Connect a capacitor here to define the RESET time at the $\overline{\text{RESPWRON}}$ pin. 1 nF typically gives 100 ms.

8.4 Device Functional Modes

The TPS6502x devices are either in the ON or the OFF mode. The OFF mode is entered when the voltage on VCC is below the UVLO threshold, 2.35 V (typically). Once the voltage at VCC has increased above UVLO, the device enters ON mode. In the ON mode, the DCDCs and LDOs are available for use.

Copyright © 2005–2016, Texas Instruments Incorporated

8.5 Programming

8.5.1 System Reset + Control Signals

The $\overline{\text{RESPWRON}}$ signal can be used as a global reset for the application. It is an open-drain output. The $\overline{\text{RESPWRON}}$ signal is generated according to the power-good comparator of VRTC, and remains low for $t_{nrespwron}$ seconds after VRTC has risen above 2.52 V (falling threshold is 2.4 V, 5% hysteresis). $t_{nrespwron}$ is set by an external capacitor at the TRESPWRON pin. 1 nF gives typically 100 ms. $\overline{\text{RESPWRON}}$ is also triggered by the $\overline{\text{HOT_RESET}}$ input. This input is internally debounced, with a filter time of typically 30 ms.

The $\overline{\text{PWRFAIL}}$ and $\overline{\text{LOW_BAT}}$ signals are generated by two voltage detectors using the PWRFAIL_SNS and LOWBAT_SNS input signals. Each input signal is compared to a 1 V threshold (falling edge) with 5% (50 mV) hysteresis.

The VDCDC3 converter is reset to its default output voltage defined by the DEFDCDC3 input, when $\overline{\text{HOT_RESET}}$ is asserted. Other I^2C registers are not affected. Generally, the VDCDC3 converter is set to its default voltage with one of these conditions: $\overline{\text{HOT_RESET}}$ active, VRTC lower than its threshold voltage, undervoltage lockout (UVLO) condition, $\overline{\text{RESPWRON}}$ active, both VDCDC3-converter AND VDCDC1-converter disabled. In addition, the voltage of VDCDC3 changes to 1xxx0, if the VDCDC1 converter is disabled. Where xxx is the state before VDCDC1 was disabled.

8.5.1.1 PB_IN and PB_OUT

In the TPS65020 the PB_IN pin is defined as an input. It is active high and debounces the input signal. For example from a push button, before passing it to a latch associated with PB_OUT (active-low). This feature allows the implementation of a push-button on-off-switch. PB_OUT is actively pulled low per default. See the *Application Information* section.

8.5.1.2 Interrupt Management and the $\overline{\text{INT}}$ Pin

The $\overline{\text{INT}}$ pin combines the outputs of the PGOOD comparators from each DC-DC converter and LDOs. The $\overline{\text{INT}}$ pin is used as a POWER_OK pin indicating when all enabled supplies are in regulation. If the PGOODZ register is read through the serial interface, any active bits are then blocked from the $\overline{\text{INT}}$ output pin.

Interrupts can be masked using the MASK register; default operation is not to mask any DCDC or LDO interrupts because this provides the POWER_OK function.

8.5.2 Serial Interface

The serial interface is compatible with the standard and fast mode I^2C specifications, allowing transfers at up to 400 kHz. The interface adds flexibility to the power supply solution, enabling most functions to be programmed to new values depending on the instantaneous application requirements and charger status to be monitored. Register contents remain intact as long as V_{CC} remains above 2 V. The TPS65020 has a 7-bit address: 1001000, other addresses are available upon contact with the factory. Attempting to read data from the register addresses not listed in this section results in FFh being read out.

For normal data transfer, DATA is allowed to change only when CLK is low. Changes when CLK is high are reserved for indicating the start and stop conditions. During data transfer, the data line must remain stable whenever the clock line is high. There is one clock pulse per bit of data. Each data transfer is initiated with a start condition and terminated with a stop condition. When addressed, the TPS65020 device generates an acknowledge bit after the reception of each byte. The master device (microprocessor) must generate an extra clock pulse that is associated with the acknowledge bit. The TPS65020 device must pull down the DATA line during the acknowledge clock pulse so that the DATA line is a stable low during the high period of the acknowledge clock pulse. The DATA line is a stable low during the high period of the acknowledge–related clock pulse. Setup and hold times must be taken into account. During read operations, a master must signal the end of data to the slave by not generating an acknowledge bit on the last byte that was clocked out of the slave. In this case, the slave TPS65020 device must leave the data line high to enable the master to generate the stop condition

Programming (continued)

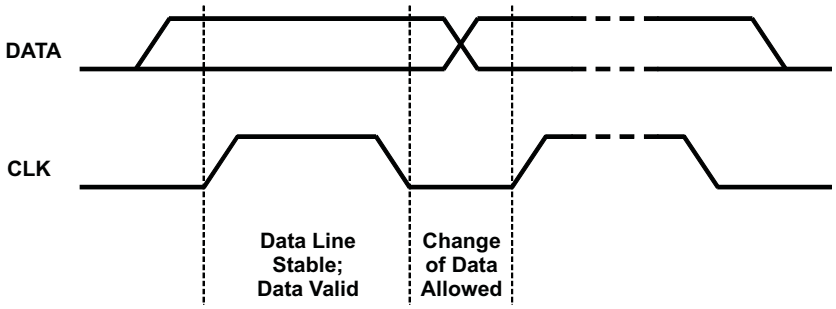

Figure 31. Bit Transfer on the Serial Interface

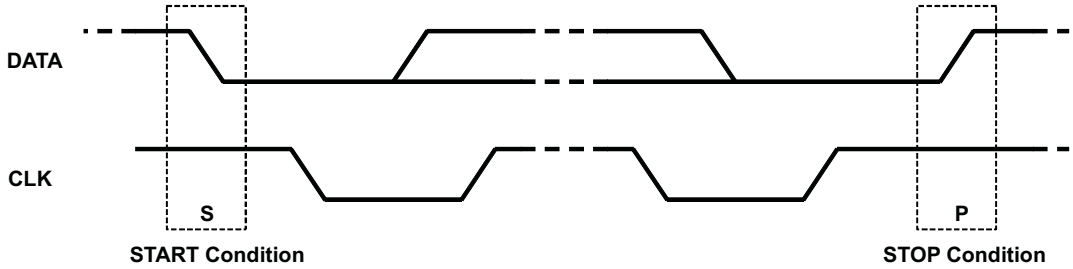

Figure 32. START and STOP Conditions

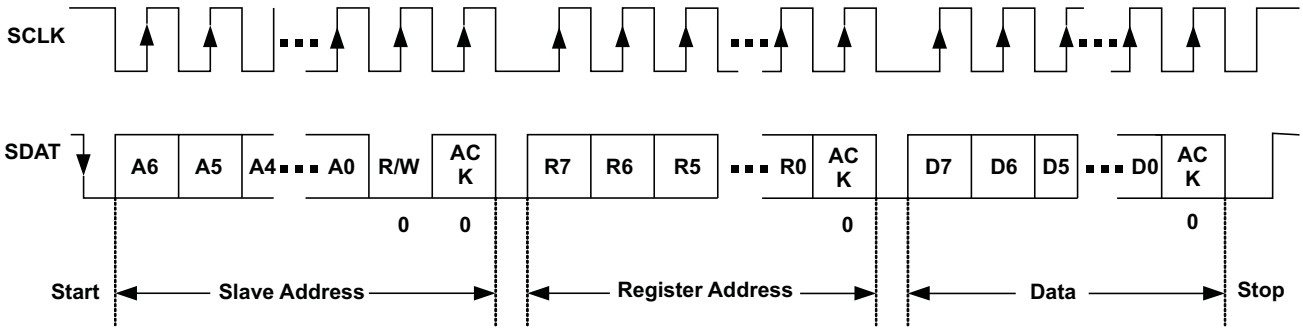

Note: SLAVE = TPS65020

Figure 33. Serial I/F WRITE to TPS65020 Device

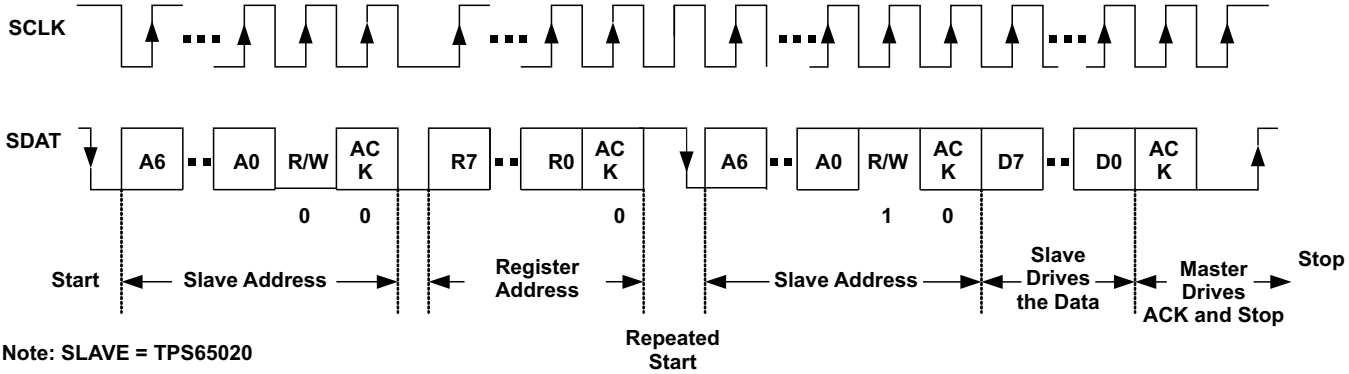

Note: SLAVE = TPS65020

Figure 34. Serial I/F READ from TPS65020: Protocol A

Copyright © 2005–2016, Texas Instruments Incorporated

Programming (continued)

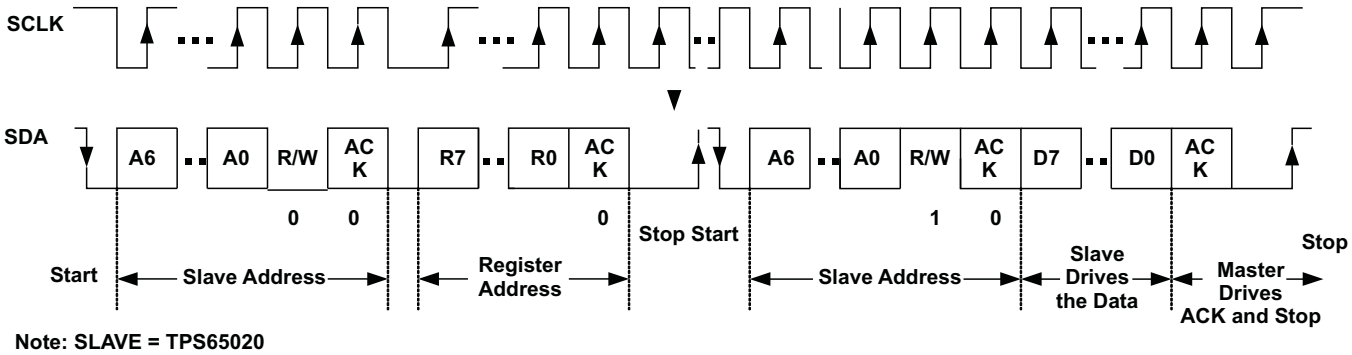

Figure 35. Serial I/F READ from TPS65020: Protocol B

8.6 Register Maps

8.6.1 VERSION Register Address: 00h (Read Only)

Table 3. VERSION Register

VERSION	B7	B6	B5	4244238.gif B4	B3	B2	B1	B0
Bit name and function	0	0	0	1	1	0	0	1
Read/Write	R	R	R	R	R	R	R	R

8.6.2 PGOODZ Register Address: 01h (Read Only)

Table 4. PGOODZ Register

PGOODZ	B7	B6	B5	B4	B3	B2	B1	B0
Bit name and function	PWRFAILZ	LOWBATTZ	PGOODZ VDCDC1	PGOODZ VDCDC2	PGOODZ VDCDC3	PGOODZ LDO2	PGOODZ LDO1	–
Set by signal	PWRFAIL	LOWBATT	PGOODZ VDCDC1	PGOODZ VDCDC2	PGOODZ VDCDC3	PGOODZ LDO2	PGOODZ LDO1	–
Default value loaded	PWRFAILZ	LOWBATTZ	PGOOD VDCDC1	PGOOD VDCDC2	PGOOD VDCDC3	PGOOD LDO2	PGOOD LDO1	–
Read/Write	R	R	R	R	R	R	R	R

Bit 7 PWRFAILZ:

0 = indicates that the PWRFAIL_SNS input voltage is above the 1-V threshold

1 = indicates that the PWRFAIL_SNS input voltage is below the 1-V threshold

Bit 6 LOWBATTZ:

0 = indicates that the LOWBATT_SNS input voltage is above the 1-V threshold

1 = indicates that the LOWBATT_SNS input voltage is below the 1-V threshold

Bit 5 PGOODZ VDCDC1:

0 = indicates that the VDCDC1 converter output voltage is within its nominal range.
This bit is zero if the VDCDC1 converter is disabled.

1 = indicates that the VDCDC1 converter output voltage is below its target regulation voltage

Bit 4 PGOODZ VDCDC2:

0 = indicates that the VDCDC2 converter output voltage is within its nominal range.
This bit is zero if the VDCDC2 converter is disabled.

1 = indicates that the VDCDC2 converter output voltage is below its target regulation voltage

Bit 3 PGOODZ VDCDC3: .

0 = indicates that the VDCDC3 converter output voltage is within its nominal range.
This bit is zero if the VDCDC3 converter is disabled and during a DVM controlled output voltage transition.

1 = indicates that the VDCDC3 converter output voltage is below its target regulation voltage

Bit 2 PGOODZ LDO2:

0 = indicates that the LDO2 output voltage is within its nominal range.
This bit is zero if LDO2 is disabled.

1 = indicates that LDO2 output voltage is below its target regulation voltage

Bit 1 PGOODZ LDO1:

0 = indicates that the LDO1 output voltage is within its nominal range.
This bit is zero if LDO1 is disabled.

Copyright © 2005–2016, Texas Instruments Incorporated

1 = indicates that the LDO1 output voltage is below its target regulation voltage

8.6.3 MASK Register Address: 02h (Read and Write), Default Value: C0h

The MASK register can be used to mask particular fault conditions from appearing at the $\overline{\text{INT}}$ pin. MASK<n> = 1 masks PGOODZ<n>.

Table 5. MASK Register

MASK	B7	B6	B5	B4	B3	B2	B1	B0
Bit name and function	MASK PWRFAILZ	MASK LOWBATTZ	MASK VDCDC1	MASK VDCDC2	MASK VDCDC3	MASK LDO2	MASK LDO1	–
Default	1	1	0	0	0	0	0	0
Default value loaded	UVLO	UVLO	UVLO	UVLO	UVLO	UVLO	UVLO	UVLO
Read/Write	R/W	R/W	R/W	R/W	R/W	R/W	R/W	R/W

8.6.4 REG_CTRL Register Address: 03h (Read and Write), Default Value: FFh

The REG_CTRL register is used to disable or enable the power supplies through the serial interface. The contents of the register are logically AND'ed with the enable pins to determine the state of the supplies. A UVLO condition resets the REG_CTRL to 0xFF, so the state of the supplies defaults to the state of the enable pin. The REG_CTRL bits are automatically reset to default when the corresponding enable pin is low.

Table 6. REG_CTRL Register

REG_CTRL	B7	B6	B5	B4	B3	B2	B1	B0
Bit name and function	–	–	VDCDC1 ENABLE	VDCDC2 ENABLE	VDCDC3 ENABLE	LDO2 ENABLE	LDO1 ENABLE	–
Default	1	1	1	1	1	1	1	–
Set by signal	–	–	DCDC1_ENZ	DCDC2_ENZ	DCDC3_ENZ	LDO_ENZ	LDO_ENZ	–
Default value loaded	–	–	UVLO	UVLO	UVLO	UVLO	UVLO	–
Read/Write	–	–	R/W	R/W	R/W	R/W	R/W	–

Bit 5 VDCDC1 ENABLE

DCDC1 Enable. This bit is logically AND'ed with the state of the DCDC1_EN pin to turn on the DCDC1 converter. Reset to 1 by a UVLO condition, the bit can be written to 0 or 1 through the serial interface. The bit is reset to 1 when the pin DCDC1_EN is pulled to GND, allowing DCDC1 to turn on when DCDC1_EN returns high.

Bit 4 VDCDC2 ENABLE

DCDC2 Enable. This bit is logically AND'ed with the state of the DCDC2_EN pin to turn on the DCDC2 converter. Reset to 1 by a UVLO condition, the bit can be written to 0 or 1 through the serial interface. The bit is reset to 1 when the pin DCDC2_EN is pulled to GND, allowing DCDC2 to turn on when DCDC2_EN returns high.

Bit 3 VDCDC3 ENABLE

DCDC3 Enable. This bit is logically AND'ed with the state of the DCDC3_EN pin to turn on the DCDC3 converter. Reset to 1 by a UVLO condition, the bit can be written to 0 or 1 through the serial interface. The bit is reset to 1 when the pin DCDC3_EN is pulled to GND, allowing DCDC3 to turn on when DCDC3_EN returns high.

Bit 2 LDO2 ENABLE

LDO2 Enable. This bit is logically AND'ed with the state of the LDO2_EN pin to turn on LDO2. Reset to 1 by a UVLO condition, the bit can be written to 0 or 1 through the serial interface. The bit is reset to 1 when the pin LDO_EN is pulled to GND, allowing LDO2 to turn on when LDO_EN returns high.

Bit 1 LDO1 ENABLE

LDO1 Enable. This bit is logically AND'ed with the state of the LDO1_EN pin to turn on LDO1. Reset to 1 by a UVLO condition, the bit can be written to 0 or 1 through the serial interface. The bit is reset to 1 when the pin LDO_EN is pulled to GND, allowing LDO1 to turn on when LDO_EN returns high.

8.6.5 CON_CTRL Register Address: 04h (Read and Write), Default Value: B0h

The CON_CTRL register is used to force any or all of the converters into forced PWM operation, when low output voltage ripple is vital. It is also used to control the phase shift between the three converters to minimize the input rms current, hence reduce the required input blocking capacitance. The DCDC1 converter is taken as the reference and consequently has a fixed zero phase shift.

Table 7. CON_CTRL Register

CON_CTRL	B7	B6	B5	B4	B3	B2	B1	B0
Bit name and function	DCDC2 PHASE1	DCDC2 PHASE0	DCDC3 PHASE1	DCDC3 PHASE0	LOW RIPPLE	FPWM DCDC2	FPWM DCDC1	FPWM DCDC3
Default	1	0	1	1	0	0	0	0
Default value loaded	UVLO	UVLO	UVLO	UVLO	UVLO	UVLO	UVLO	UVLO
Read/Write	R/W	R/W	R/W	R/W	R/W	R/W	R/W	R/W

Table 8. DCDC2 and DCDC3 Phase Delay

CON_CTRL<7:6>	DCDC2 CONVERTER DELAYED BY		CON_CTRL<5:4>	DCDC3 CONVERTER DELAYED BY
00	zero		00	zero
01	1/4 cycle		01	1/4 cycle
10	1/2 cycle		10	1/2 cycle
11	3/4 cycle		11	3/4 cycle

Bit 3 LOW RIPPLE:

0 = PFM mode operation optimized for high efficiency for all converters

1 = PFM mode operation optimized for low-output voltage ripple for all converters

Bit 2 FPWM DCDC2:

0 = DCDC2 converter operates in PWM / PFM mode

1 = DCDC2 converter is forced into fixed-frequency PWM mode

Bit 1 FPWM DCDC1:

0 = DCDC1 converter operates in PWM / PFM mode

1 = DCDC1 converter is forced into fixed-frequency PWM mode

Bit 0 FPWM DCDC3:

0 = DCDC3 converter operates in PWM / PFM mode

1 = DCDC3 converter is forced into fixed-frequency PWM mode

Copyright © 2005–2016, Texas Instruments Incorporated

8.6.6 CON_CTRL2 Register Address: 05h (Read and Write), Default Value: 40h

The CON_CTRL2 register can be used to take control the inductive converters.

Table 9. CON_CTRL2 Register

CON_CTRL2	B7	B6	B5	B4	B3	B2	B1	B0
Bit name and function	GO	CORE ADJ Allowed	–	–	–	DCDC2 Discharge	DCDC1 Discharge	DCDC3 Discharge
Default	0	1	0	0	0	0	0	0
Default value loaded	UVLO + DONE	UVLO	–	–	–	UVLO	UVLO	UVLO
Read/Write	R/W	R/W	–	–	–	R/W	R/W	R/W

Bit 7 GO:

0 = no change in the output voltage for the DCDC3 converter

1 = the output voltage of the DCDC3 converter is changed to the value defined in DEFCORE with the slew rate defined in DEFSLEW. This bit is automatically cleared when the DVM transition is complete. The transition is considered complete in this case when the desired output voltage code has been reached, not when the VDCDC3 output voltage is actually in regulation at the desired voltage.

Bit 6 CORE ADJ Allowed:

0 = the output voltage is set with the I^2C register

1 = DEFDCDC3 is either connected to GND or VCC or an external voltage divider. When connected to GND or VCC, VDCDC3 defaults to 1.3 V or 1.55 V respectively at start-up

Bit 2 – 0 0 = the output capacitor of the associated converter is not actively discharged when the converter is disabled

1 = the output capacitor of the associated converter is actively discharged when the converter is disabled. This decreases the fall time of the output voltage at light load

8.6.7 DEFCORE. Register Address: 06h (Read and Write), Default Value: 14h/1Eh

Table 10. DEFCORE Register

DEFCORE	B7	B6	B5	B4	B3	B2	B1	B0
Bit name and function	–	–	–	CORE4	CORE3	CORE2	CORE1	CORE0
Default	0	0	0	1	DEFDCDC3	1	DEFDCDC3	0
Default value loaded	–	–	–	RESET(1)	RESET(1)	RESET(1)	RESET(1)	RESET(1)
Read/Write	–	–	–	R/W	R/W	R/W	R/W	R/W

RESET(1): DEFCORE is reset to its default value by one of these events:

- undervoltage lockout (UVLO)
- DCDC1 AND DCDC3 disabled
- $\overline{\text{HOT_RESET}}$ pulled low
- $\overline{\text{RESPWRON}}$ active
- VRTC below threshold

Table 11. DCDC3 DVS Voltages

CORE4	CORE3	CORE2	CORE1	CORE0	VDCDC3		CORE4	CORE3	CORE2	CORE1	CORE0	VDCDC3
0	0	0	0	0	0.8 V		1	0	0	0	0	1.2 V
0	0	0	0	1	0.825 V		1	0	0	0	1	1.225 V
0	0	0	1	0	0.85 V		1	0	0	1	0	1.25 V
0	0	0	1	1	0.875 V		1	0	0	1	1	1.275 V
0	0	1	0	0	0.9 V		1	0	1	0	0	1.3 V
0	0	1	0	1	0.925 V		1	0	1	0	1	1.325 V
0	0	1	1	0	0.95 V		1	0	1	1	0	1.35 V
0	0	1	1	1	0.975 V		1	0	1	1	1	1.375 V
0	1	0	0	0	1 V		1	1	0	0	0	1.4 V
0	1	0	0	1	1.025 V		1	1	0	0	1	1.425 V
0	1	0	1	0	1.05 V		1	1	0	1	0	1.45 V
0	1	0	1	1	1.075 V		1	1	0	1	1	1.475 V
0	1	1	0	0	1.1 V		1	1	1	0	0	1.5 V
0	1	1	0	1	1.125 V		1	1	1	0	1	1.525 V
0	1	1	1	0	1.15 V		1	1	1	1	0	1.55 V
0	1	1	1	1	1.175 V		1	1	1	1	1	1.6 V

8.6.8 DEFSLEW Register Address: 07h (Read and Write), Default Value: 06h

Table 12. DEFSLEW Register

DEFSLEW	B7	B6	B5	B4	B3	B2	B1	B0
Bit name and function	–	–	–	–	–	SLEW2	SLEW1	SLEW0
Default	–	–	–	–	–	1	1	0
Default value loaded	–	–	–	–	–	UVLO	UVLO	UVLO
Read/Write	–	–	–	–	–	R/W	R/W	R/W

Copyright © 2005–2016, Texas Instruments Incorporated

Table 13. DCDC3 DVS Slew Rate

SLEW2	SLEW1	SLEW0	VDCDC3 SLEW RATE
0	0	0	0.15 mV/µs
0	0	1	0.3 mV/µs
0	1	0	0.6 mV/µs
0	1	1	1.2 mV/µs
1	0	0	2.4 mV/µs
1	0	1	4.8 mV/µs
1	1	0	9.6 mV/µs
1	1	1	Immediate

8.6.9 LDO_CTRL Register Address: 08h (Read and Write), Default Value: 23h

The LDO_CTRL registers can be used to set the output voltage of LDO1 and LDO2.

Table 14. LDO_CTRL Register

LDO_CTRL	B7	B6	B5	B4	B3	B2	B1	B0
Bit name and function	–	LDO2_2	LDO2_1	LDO2_0	–	LDO1_2	LDO1_1	LDO1_0
Default	–	0	1	0	–	0	1	1
Default value loaded	–	UVLO	UVLO	UVLO	–	UVLO	UVLO	UVLO
Read/Write	–	R/W	R/W	R/W	–	R/W	R/W	R/W

Table 15. LDO2 and LDO3 I2C Voltage Options

LDO1_2	LDO1_1	LDO1_0	LDO1 OUTPUT VOLTAGE		LDO2_2	LDO2_1	LDO2_0	LDO2 OUTPUT VOLTAGE
0	0	0	1 V		0	0	0	1 V
0	0	1	1.05 V		0	0	1	1.05 V
0	1	0	1.1 V		0	1	0	1.1 V
0	1	1	1.3 V		0	1	1	1.3 V
1	0	0	1.8 V		1	0	0	1.8 V
1	0	1	2.5 V		1	0	1	2.5 V
1	1	0	3 V		1	1	0	3 V
1	1	1	3.3 V		1	1	1	3.3 V

Copyright © 2005–2016, Texas Instruments Incorporated

9 Application and Implementation

NOTE

Information in the following applications sections is not part of the TI component specification, and TI does not warrant its accuracy or completeness. TI's customers are responsible for determining suitability of components for their purposes. Customers must validate and test their design implementation to confirm system functionality.

9.1 Application Information

9.1.1 Input Voltage Connection

The low power section of the control circuit for the step-down converters DCDC1, DCDC2, and DCDC3 is supplied by the VCC pin while the circuitry with high power such as the power stage is powered from the VINDCDC1, VINDCDC2, and VINDCDC3 pins. For proper operation of the step-down converters, VINDCDC1, VINDCDC2, VNDCDC3, and VCC must be tied to the same voltage rail. Step-down converters that are not planned to be used, still must be powered from their input pin on the same rails than the other step-down converters and VCC.

LDO1 and LDO2 share a supply voltage pin which can be powered from the V_{CC} rails or from a voltage lower than V_{CC}, for example, the output of one of the step-down converters as long as it is operated within the input voltage range of the LDOs. If both LDOs are not used, the VINLDO pin can be tied to GND.

9.1.2 Unused Regulators

In case a step-down converter is not used, its input supply voltage pin VINDCDCx still needs to be connected to the V_{CC} rail along with supply input of the other step-down converters. TI recommends closing the control loop such that an inductor and output capacitor is added in the same way as it would be when operated normally. If one of the LDOs is not used, its output capacitor must be added as well. If both LDOs are not used, the input supply pin as well as the output pins of the LDOs (VINLDO, VLDO1, VLDO2) must be tied to GND.

9.1.3 Implementing a Push-Button On-Off Function Using PB_IN and PB_OUT

In mobile phone applications, the device must not automatically power up when the battery is inserted. Using PB_IN and PB_OUT prevents power up. After the main battery is inserted, the PB_OUT open-drain output is low. When this pins is connected with $\overline{\text{PWRFAIL}}$, the signal is pulled low, preventing the Intel PXA270 start up.

See the latest version of Intels technical specifications about the Intel PXA270 Processor Family for additional information on the functionality of this chip and possible limitations.

Copyright © 2005–2016, Texas Instruments Incorporated

Application Information (continued)

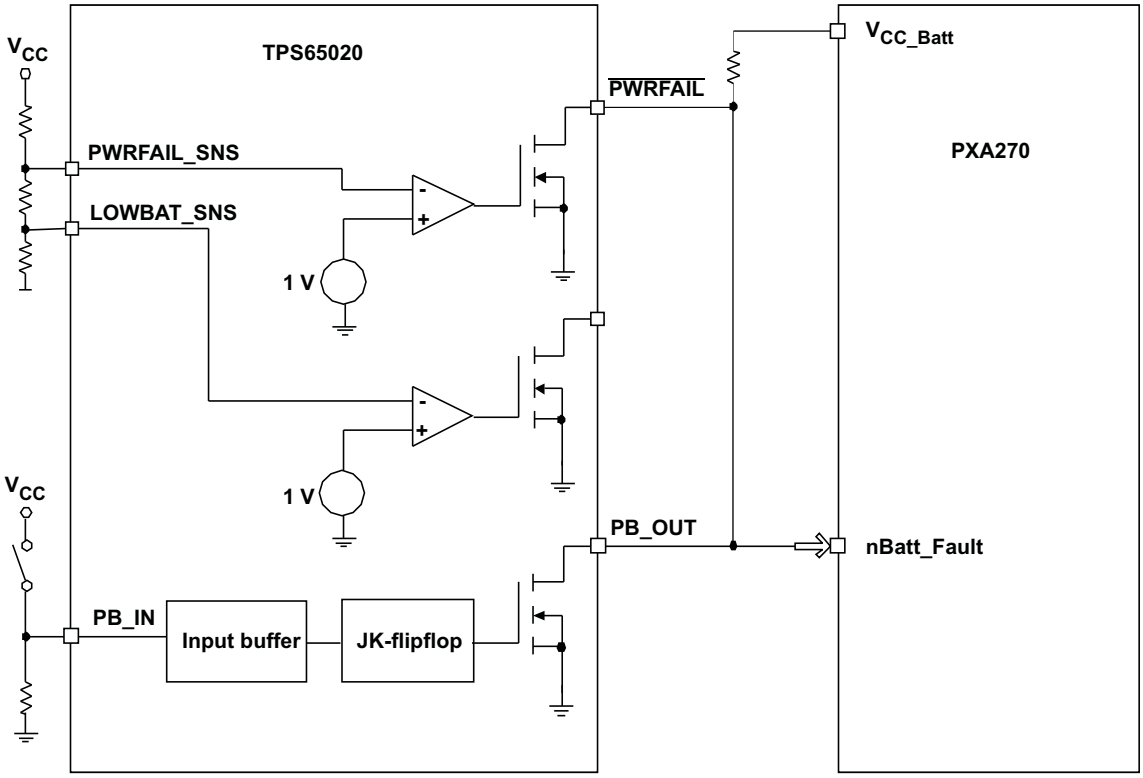

Figure 36. Control of the PXA270

9.2 Typical Application

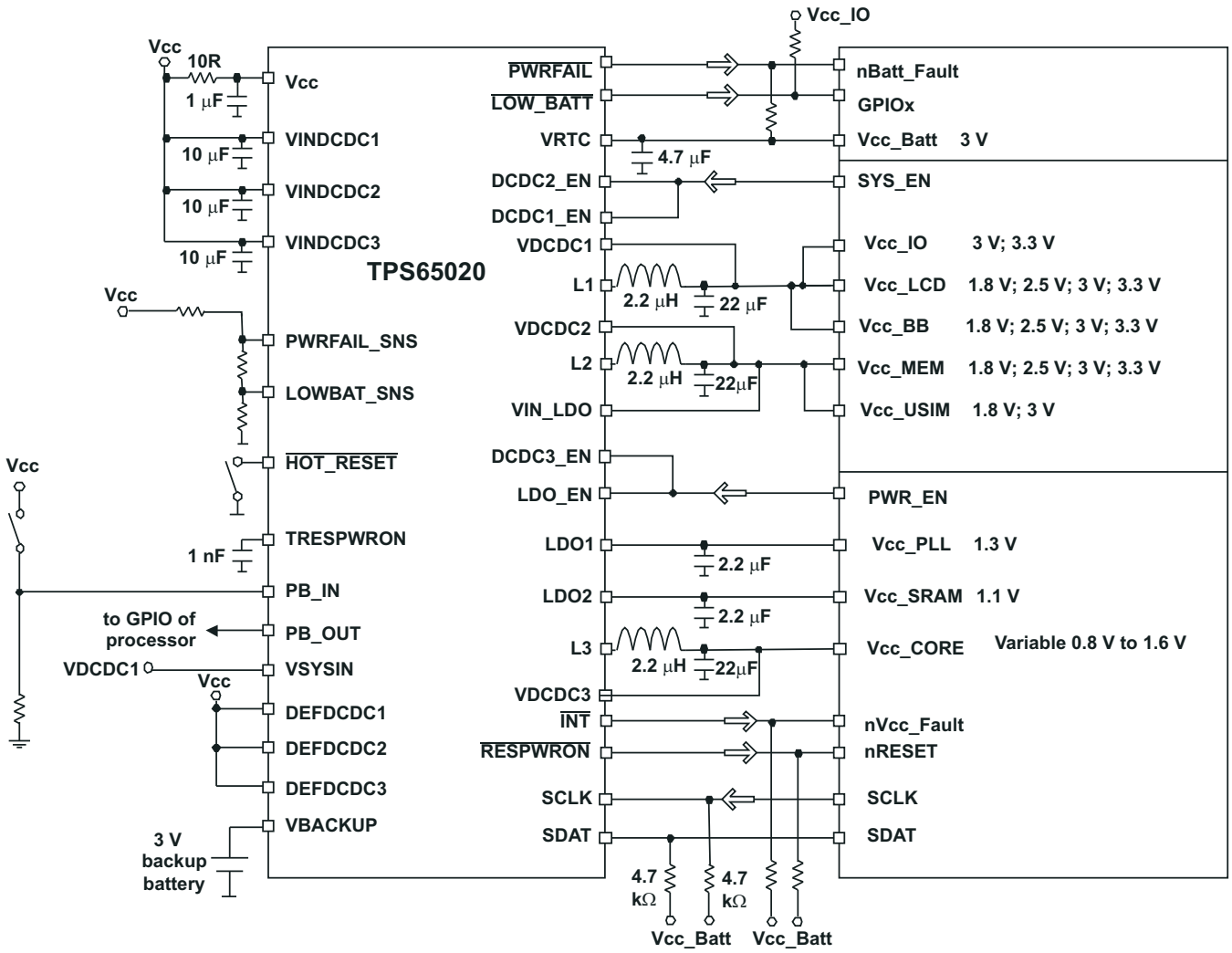

Figure 37. Typical Configuration for the Intel PXA270 Bulverde Processor

9.2.1 Design Requirements

The TPS6502x devices have only a few design requirements. Use the following parameters for the design examples:

- 1-µF bypass capacitor on VCC, located as close as possible to the VCC pin to ground
- VCC and VINDCDCx must be connected to the same voltage supply with minimal voltage difference.
- Input capacitors must be present on the VINDCDCx and VIN_LDO supplies if used
- Output inductor and capacitors must be used on the outputs of the DCDC converters if used
- Output capacitors must be used on the outputs of the LDOs if used

9.2.2 Detailed Design Procedure

9.2.2.1 Inductor Selection for the DC-DC Converters

Each of the converters in the TPS65020 typically use a 3.3-µH output inductor. Larger or smaller inductor values are used to optimize the performance of the device for specific operation conditions. The selected inductor has to be rated for its DC resistance and saturation current. The DC resistance of the inductance influences directly the efficiency of the converter. Therefore, an inductor with lowest DC resistance must be selected for highest efficiency.

Copyright © 2005–2016, Texas Instruments Incorporated

Typical Application (continued)

For a fast transient response, a 2.2-µH inductor in combination with a 22-µF output capacitor is recommended.

Equation 8 calculates the maximum inductor current under static load conditions. The saturation current of the inductor must be rated higher than the maximum inductor current as calculated with Equation 8. This is needed because during heavy-load transient the inductor current rises above the value calculated under Equation 8.

$$\Delta I_L = Vout \times \frac{1 - \frac{Vout}{Vin}}{L \times f} \tag{8}$$

$$I_{Lmax} = I_{outmax} + \frac{\Delta I_L}{2}$$

where

- f = Switching Frequency (1.5 MHz typical)
- L = Inductor Value
- ΔI_L = Peak-to-Peak inductor ripple current
- I_{LMAX} = Maximum Inductor current (9)

The highest inductor current occurs at maximum Vin.

Open-core inductors have a soft saturation characteristic, and they can usually handle higher inductor currents versus a comparable shielded inductor.

A more conservative approach is to select the inductor current rating just for the maximum switch current of the TPS65020 (2 A for the VDCDC1 and VDCDC2 converters, and 1.3 A for the VDCDC3 converter). The core material from inductor to inductor differs and has an impact on the efficiency especially at high switching frequencies.

See Table 16 and the typical applications for possible inductors.

Table 16. Tested Inductors

DEVICE	INDUCTOR VALUE	TYPE	COMPONENT SUPPLIER
DCDC3 converter	3.3 µH	CDRH2D14NP-3R3	Sumida
	3.3 µH	LPS3010-332	Coilcraft
	3.3 µH	VLF4012AT-3R3M1R3	TDK
	2.2 µH	VLF4012AT-2R2M1R5	TDK
	2.2 µH	NR3015T2R2	Taiyo-Yuden
DCDC2 converter	3.3 µH	CDRH2D18/HPNP-3R3	Sumida
	3.3 µH	VLF4012AT-3R3M1R3	TDK
	2.2 µH	VLCF4020-2R2	TDK
DCDC1 converter	3.3 µH	CDRH3D14/HPNP-3R2	Sumida
	3.3 µH	CDRH4D28C-3R2	Sumida
	3.3 µH	MSS5131-332	Coilcraft
	2.2 µH	VLCF4020-2R2	TDK

9.2.2.2 Output Capacitor Selection

The advanced fast response voltage mode control scheme of the inductive converters implemented in the TPS65020 allow the use of small ceramic capacitors with a typical value of 10 µF for a 3.3-µH inductor for each converter without having large output voltage under and overshoots during heavy-load transients.

For a fast transient response a 22-µF capacitor with a 2.2-µH inductor must be used on each converter.

Ceramic capacitors having low ESR values have the lowest output voltage ripple and are recommended. See Table 17 for recommended components.

If ceramic output capacitors are used, the capacitor RMS ripple current rating always meets the application requirements. Just for completeness, the RMS ripple current is calculated in Equation 10.

$$I_{RMSCout} = \frac{1 - \frac{Vout}{Vin}}{L \times f} \times \frac{1}{2 \times \sqrt{3}} \quad (10)$$

At nominal load current, the inductive converters operate in PWM mode. The overall output voltage ripple is the sum of the voltage spike caused by the output capacitor ESR plus the voltage ripple caused by charging and discharging the output capacitor:

$$I_{RMSCout} = \frac{1 - \frac{Vout}{Vin}}{L \times f} \times \left(\frac{1}{8 \times Cout \times f} + ESR\right)$$

where

- the highest output voltage ripple occurs at the highest input voltage V_{in} (11)

At light-load currents, the converters operate in PSM and the output voltage ripple is dependent on the output capacitor value. The output voltage ripple is set by the internal comparator delay and the external capacitor. The typical output voltage ripple is less than 1% of the nominal output voltage.

9.2.2.3 Input Capacitor Selection

Because of the nature of the buck converter having a pulsating input current, a low ESR input capacitor is required for best input voltage filtering and minimizing the interference with other circuits caused by high input voltage spikes. Each DC-DC converter requires a 10-µF ceramic input capacitor on its input pin VINDCDCx. The input capacitor is increased without any limit for better input voltage filtering. The VCC pin is separated from the input for the DC-DC converters. A filter resistor of up to 10R and a 1-µF capacitor is used for decoupling the VCC pin from switching noise. Note that the filter resistor may affect the UVLO threshold because up to 3 mA can flow through this resistor into the VCC pin when all converters are running in PWM mode.

Table 17. Possible Capacitors

CAPACITOR VALUE	CASE SIZE	COMPONENT SUPPLIER	COMMENTS
22 µF	1206	TDK C3216X5R0J226M	Ceramic
22 µF	1206	Taiyo Yuden JMK316BJ226ML	Ceramic
10 µF	0805	Taiyo Yuden JMK212BJ106M	Ceramic
10 µF	0805	TDK C2012X5R0J106M	Ceramic
22 µF	0805	TDK C2012X5R0J226MT	Ceramic
22 µF	0805	Taiyo Yuden JMK212BJ226MG	Ceramic

9.2.2.4 Output Voltage Selection

The DEFDCDC1, DEFDCDC2, and DEFDCDC3 pins are used to set the output voltage for each step-down converter. See the table for the default voltages if the pins are pulled to GND or to VCC. If a different voltage is needed, an external resistor divider can be added to the DEFDCDCx pin as shown in Figure 38.

The output voltage of VDCDC3 is set with the I^2C interface. If the voltage is changed from the default, using the DEFCORE register, the output voltage only depends on the register value. Any resistor divider at DEFDCDC3 does not change the voltage set with the register. Bit B6 in the CON_CTRL2 register is used to switch between the internal voltage setting or the voltage set with the external DEFDCDC3 pin for the VDCDC3 converter.

Table 18. Voltage Options

PIN	LEVEL	DEFAULT OUTPUT VOLTAGE
DEFDCDC1	VCC	3.3 V
	GND	3 V
DEFDCDC2	VCC	2.5 V
	GND	1.8 V
DEFDCDC3	VCC	1.55 V
	GND	1.3 V

Copyright © 2005–2016, Texas Instruments Incorporated

Figure 38 illustrations how to use an external resistor divider at DEFDCDCx.

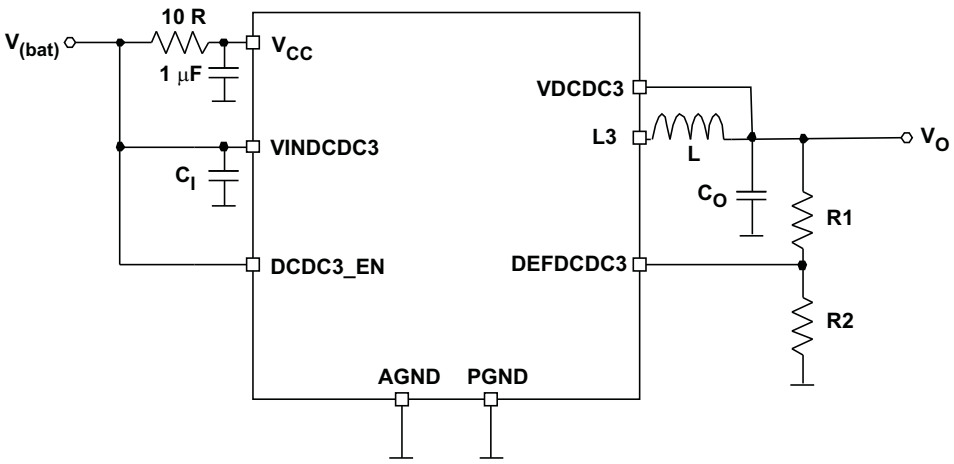

Figure 38. External Resistor Divider

When a resistor divider is connected to DEFDCDCx, the output voltage can be set from 0.6 V up to the input voltage $V_{(bat)}$. The total resistance (R1+R2) of the voltage divider must be kept in the 1-MR range to maintain a high efficiency at light load.

$V_{(DEFDCDCx)} = 0.6$ V

$$V_{OUT} = V_{DEFDCDCx} \times \frac{R1 + R2}{R2} \qquad R1 = R2 \times \left(\frac{V_{OUT}}{V_{DEFDCDCx}}\right) - R2 \tag{12}$$

9.2.2.5 VRTC Output

The VRTC output is typically connected to the V_{CC}_Batt pin of a Intel PXA270 processor. During power-up of the processor, the TPS65020 internally switches from the LDO or the backup battery to the system voltage connected at the VSYSIN pin (see Figure 30). It is required to add a capacitor of 4.7-µF minimum to the VRTC pin, even the output may be unused.

9.2.2.6 LDO1 and LDO2

The LDOs default voltage is 1.1 V for LDO2 and 1.3 V for LDO1. They are intended to provide power to VCC_PLL and the VCC_SRAM pin on a PXA270 processor. The minimum output capacitor required is 2.2 µF. The LDOs output voltage is changed to different voltages between 1 V and 3.3 V using the I^2C interface. Therefore, they can also be used as general-purpose LDOs in applications powering processors different from PXA270. The supply voltage for the LDOs needs to be connected to the VINLDO pin, giving the flexibility to connect the lowest voltage available in the system, and providing the highest efficiency.

9.2.2.7 TRESPWRON

This is the input to a capacitor that defines the reset delay time after the voltage at VRTC rises above 2.52 V. The timing is generated by charging and discharging the capacitor with a current of 2 µA between a threshold of 0.25 V and 1 V for 128 cycles. A 1-nF capacitor gives a delay time of 100 ms.

While there is no real upper and lower limit for the capacitor connected to TRESPWRON, TI recommends not leaving signal pins open.

$$t_{(reset)} = 2 \times 128 \times \left(\frac{(1\text{ V} - 0.25\text{ V}) \times C_{(reset)}}{2\ \mu\text{A}}\right) \tag{13}$$

where

- $t_{(reset)}$ is the reset delay time
- $C_{(reset)}$ is the capacitor connected to the TRESPWRON pin

The minimum and maximum values for the timing parameters called ICONST (2 µA), TRESPWRON_UPTH (1 V), and TRESPWRON_LOWTH (0.25 V) can be found under the *Electrical Characteristics*.

9.2.2.8 VCC Filter

An RC filter connected at the VCC input is used to prevent noise from the internal supply for the bandgap and other analog circuitry. A typical resistor value of 1 Ω and 1 µF is used to filter the switching spikes generated by the DC-DC converters. A resistor larger than 10 Ω must not be used because the current (up to 3 mA) into VCC causes a voltage drop at the resistor. This causes the undervoltage lockout circuitry connected internally at VCC to switch off too early.

9.2.3 Application Curves

Graphs were taken using the EVM with the inductor and output capacitor combinations in Table 19.

Table 19. Inductor and Output Capacitor Combinations

CONVERTER	INDUCTOR	OUTPUT CAPACITOR	OUTPUT CAPACITOR VALUE
VDCDC1	VLCF4020-2R2	C2012X5R0J106M	2 × 10 µF
VDCDC2	VLCF4020-2R2	C2012X5R0J106M	2 × 10 µF
VDCDC3	VLF4012AT-2R2M1R5	C2012X5R0J106M	2 × 10 µF

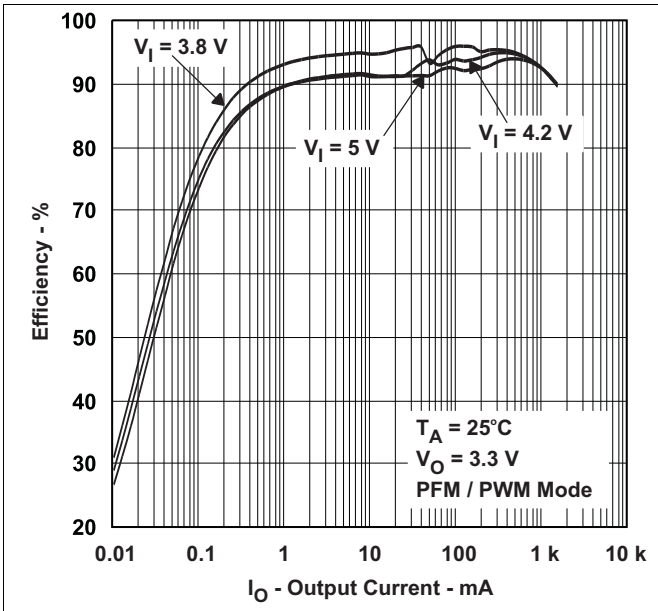

Figure 39. DCDC1 Efficiency

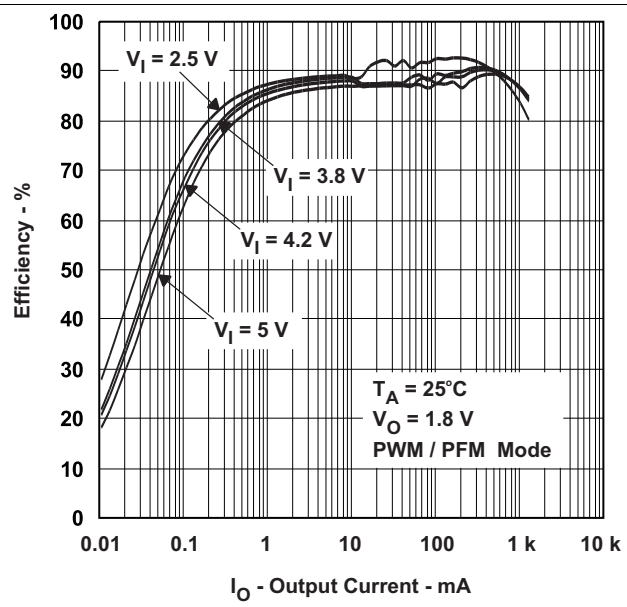

Figure 40. DCDC2 Efficiency

Copyright © 2005–2016, Texas Instruments Incorporated

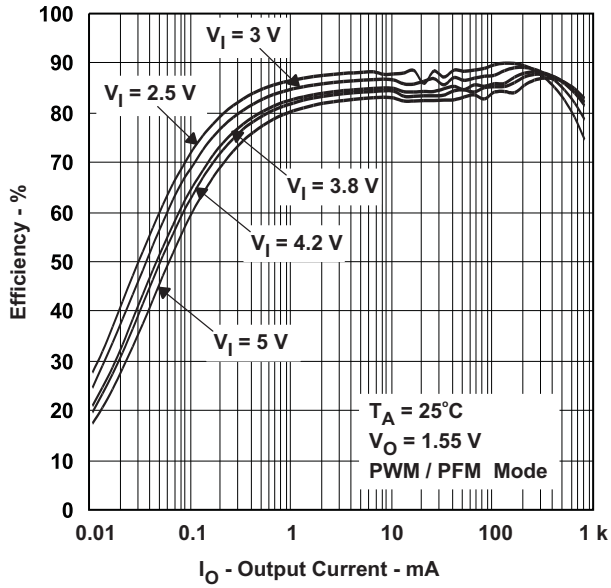

Figure 41. DCDC3 Efficiency

10 Power Supply Recommendations

10.1 Requirements for Supply Voltages Below 3.0 V

For a supply voltage on pins V_{CC}, VINDCDC1, VINDCDC2, and VINDCDC3 below 3.0 V, TI recommends enabling the DCDC1, DCDC2, and DCDC3 converters in sequence. If all 3 step-down converters are enabled at the same time while the supply voltage is close to the internal reset detection threshold, a reset may be generated during power-up. Therefore, TI recommends enabling DC-DC converters in sequence. This can be done by driving one or two of the enable pins with a RC delay or by driving the enable pin by the output voltage of one of the other step-down converters. If a voltage above 3.0 V is applied on pin VBACKUP while V_{CC} and VINDCDCx is below 3.0 V, there is no restriction in the power-up sequencing as VBACKUP is used to power the internal circuitry.

11 Layout

11.1 Layout Guidelines

As for all switching power supplies, the layout is an important step in the design. Proper function of the device demands careful attention to PCB layout. Take care in board layout to get the specified performance. If the layout is not carefully done, the regulators may show poor line regulation, load regulation, or both, and stability issues, as well as EMI problems. It is critical to provide a low impedance ground path. Therefore, use wide and short traces for the main current paths. The input capacitors must be placed as close as possible to the IC pins as well as the inductor and output capacitor.

For TPS65020, connect the PGND pins of the device to the PowerPAD land of the PCB and connect the analog ground connections (AGND) to the PGND at the PowerPAD. It is essential to provide a good thermal and electrical connection of all GND pins using multiple vias to the GND-plane. Keep the common path to the AGND pins, which returns the small signal components, and the high current of the output capacitors as short as possible to avoid ground noise. The VDCDCx line must be connected right to the output capacitor and routed away from noisy components and traces (for example, the L1, L2, and L3 traces).

11.2 Layout Example

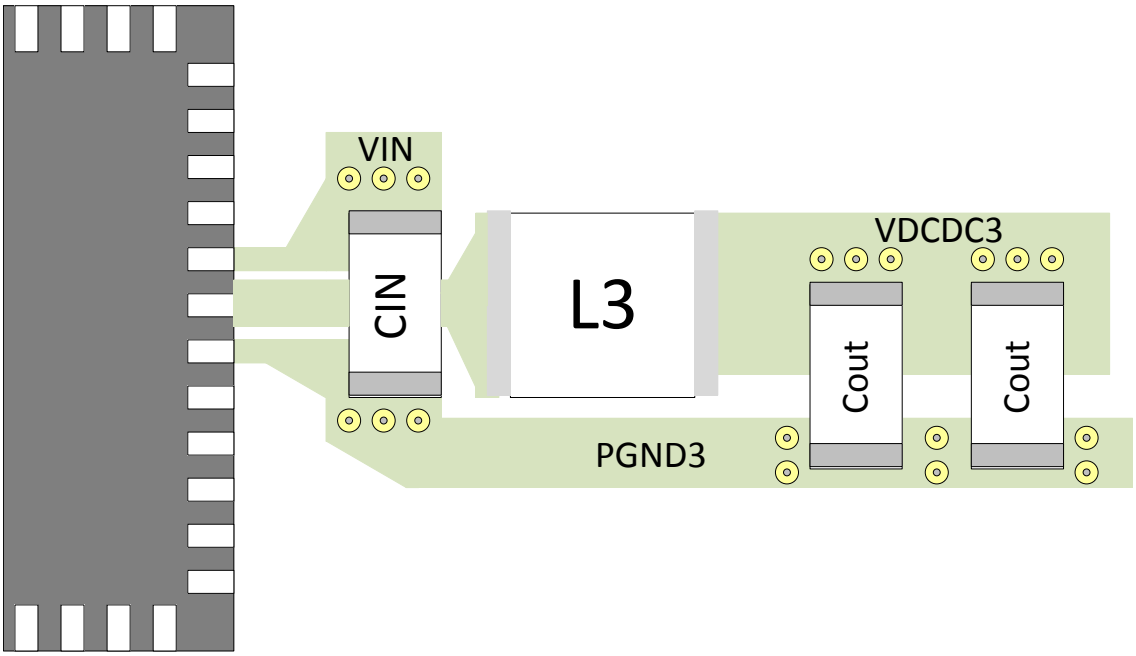

Figure 42. Layout Example of a DCDC Converter

Copyright © 2005–2016, Texas Instruments Incorporated

12 Device and Documentation Support

12.1 Device Support

12.1.1 Third-Party Products Disclaimer

TI'S PUBLICATION OF INFORMATION REGARDING THIRD-PARTY PRODUCTS OR SERVICES DOES NOT CONSTITUTE AN ENDORSEMENT REGARDING THE SUITABILITY OF SUCH PRODUCTS OR SERVICES OR A WARRANTY, REPRESENTATION OR ENDORSEMENT OF SUCH PRODUCTS OR SERVICES, EITHER ALONE OR IN COMBINATION WITH ANY TI PRODUCT OR SERVICE.

12.2 Community Resources

The following links connect to TI community resources. Linked contents are provided "AS IS" by the respective contributors. They do not constitute TI specifications and do not necessarily reflect TI's views; see TI's Terms of Use.

TI E2E™ Online Community ***TI's Engineer-to-Engineer (E2E) Community.*** Created to foster collaboration among engineers. At e2e.ti.com, you can ask questions, share knowledge, explore ideas and help solve problems with fellow engineers.

Design Support ***TI's Design Support*** Quickly find helpful E2E forums along with design support tools and contact information for technical support.

12.3 Trademarks

TMS320, OMAP, PowerPAD, E2E are trademarks of Texas Instruments.
Intel is a registered trademark of Intel Corporation.
All other trademarks are the property of their respective owners.

12.4 Electrostatic Discharge Caution

These devices have limited built-in ESD protection. The leads should be shorted together or the device placed in conductive foam during storage or handling to prevent electrostatic damage to the MOS gates.

12.5 Glossary

SLYZ022 — *TI Glossary*.

This glossary lists and explains terms, acronyms, and definitions.

13 Mechanical, Packaging, and Orderable Information

The following pages include mechanical, packaging, and orderable information. This information is the most current data available for the designated devices. This data is subject to change without notice and revision of this document. For browser-based versions of this data sheet, refer to the left-hand navigation.

PACKAGING INFORMATION

Orderable part number	Status (1)	Material type (2)	Package | Pins	Package qty | Carrier	RoHS (3)	Lead finish/ Ball material (4)	MSL rating/ Peak reflow (5)	Op temp (°C)	Part marking (6)
TPS65020RHAR	Active	Production	VQFN (RHA) | 40	2500 | LARGE T&R	Yes	NIPDAU	Level-3-260C-168 HR	-40 to 85	TPS 65020
TPS65020RHAR.B	Active	Production	VQFN (RHA) | 40	2500 | LARGE T&R	Yes	NIPDAU	Level-3-260C-168 HR	-40 to 85	TPS 65020
TPS65020RHAT	Active	Production	VQFN (RHA) | 40	250 | SMALL T&R	Yes	NIPDAU	Level-3-260C-168 HR	-40 to 85	TPS 65020
TPS65020RHAT.B	Active	Production	VQFN (RHA) | 40	250 | SMALL T&R	Yes	NIPDAU	Level-3-260C-168 HR	-40 to 85	TPS 65020
TPS65020RHATG4	Active	Production	VQFN (RHA) | 40	250 | SMALL T&R	Yes	NIPDAU	Level-3-260C-168 HR	-40 to 85	TPS 65020
TPS65020RHATG4.B	Active	Production	VQFN (RHA) | 40	250 | SMALL T&R	Yes	NIPDAU	Level-3-260C-168 HR	-40 to 85	TPS 65020

(1) **Status:** For more details on status, see our product life cycle.

(2) **Material type:** When designated, preproduction parts are prototypes/experimental devices, and are not yet approved or released for full production. Testing and final process, including without limitation quality assurance, reliability performance testing, and/or process qualification, may not yet be complete, and this item is subject to further changes or possible discontinuation. If available for ordering, purchases will be subject to an additional waiver at checkout, and are intended for early internal evaluation purposes only. These items are sold without warranties of any kind.

(3) **RoHS values:** Yes, No, RoHS Exempt. See the TI RoHS Statement for additional information and value definition.

(4) **Lead finish/Ball material:** Parts may have multiple material finish options. Finish options are separated by a vertical ruled line. Lead finish/Ball material values may wrap to two lines if the finish value exceeds the maximum column width.

(5) **MSL rating/Peak reflow:** The moisture sensitivity level ratings and peak solder (reflow) temperatures. In the event that a part has multiple moisture sensitivity ratings, only the lowest level per JEDEC standards is shown. Refer to the shipping label for the actual reflow temperature that will be used to mount the part to the printed circuit board.

(6) **Part marking:** There may be an additional marking, which relates to the logo, the lot trace code information, or the environmental category of the part.

Multiple part markings will be inside parentheses. Only one part marking contained in parentheses and separated by a "~" will appear on a part. If a line is indented then it is a continuation of the previous line and the two combined represent the entire part marking for that device.

Important Information and Disclaimer: The information provided on this page represents TI's knowledge and belief as of the date that it is provided. TI bases its knowledge and belief on information provided by third parties, and makes no representation or warranty as to the accuracy of such information. Efforts are underway to better integrate information from third parties. TI has taken and continues to take reasonable steps to provide representative and accurate information but may not have conducted destructive testing or chemical analysis on incoming materials and chemicals. TI and TI suppliers consider certain information to be proprietary, and thus CAS numbers and other limited information may not be available for release.

In no event shall TI's liability arising out of such information exceed the total purchase price of the TI part(s) at issue in this document sold by TI to Customer on an annual basis.

TAPE AND REEL INFORMATION

REEL DIMENSIONS

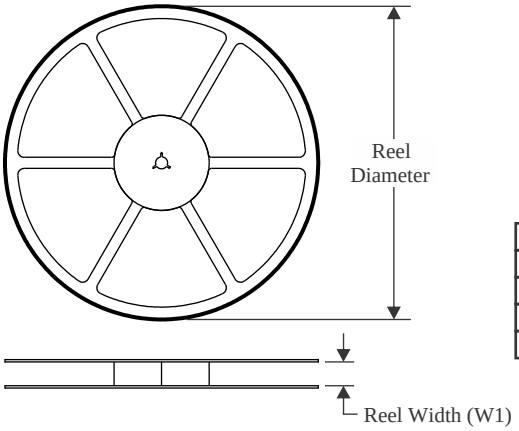

TAPE DIMENSIONS

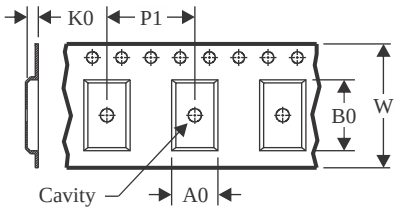

A0	Dimension designed to accommodate the component width
B0	Dimension designed to accommodate the component length
K0	Dimension designed to accommodate the component thickness
W	Overall width of the carrier tape
P1	Pitch between successive cavity centers

QUADRANT ASSIGNMENTS FOR PIN 1 ORIENTATION IN TAPE

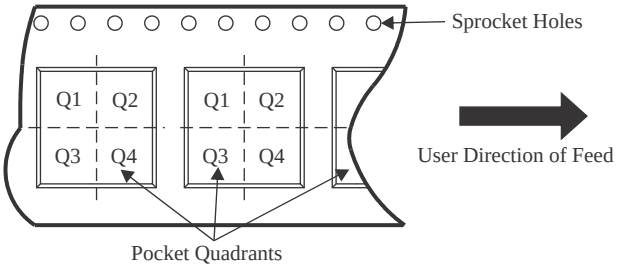

*All dimensions are nominal

Device	Package Type	Package Drawing	Pins	SPQ	Reel Diameter (mm)	Reel Width W1 (mm)	A0 (mm)	B0 (mm)	K0 (mm)	P1 (mm)	W (mm)	Pin1 Quadrant
TPS65020RHAR	VQFN	RHA	40	2500	330.0	16.4	6.3	6.3	1.1	12.0	16.0	Q2
TPS65020RHAT	VQFN	RHA	40	250	180.0	16.4	6.3	6.3	1.1	12.0	16.0	Q2
TPS65020RHATG4	VQFN	RHA	40	250	180.0	16.4	6.3	6.3	1.1	12.0	16.0	Q2

TAPE AND REEL BOX DIMENSIONS

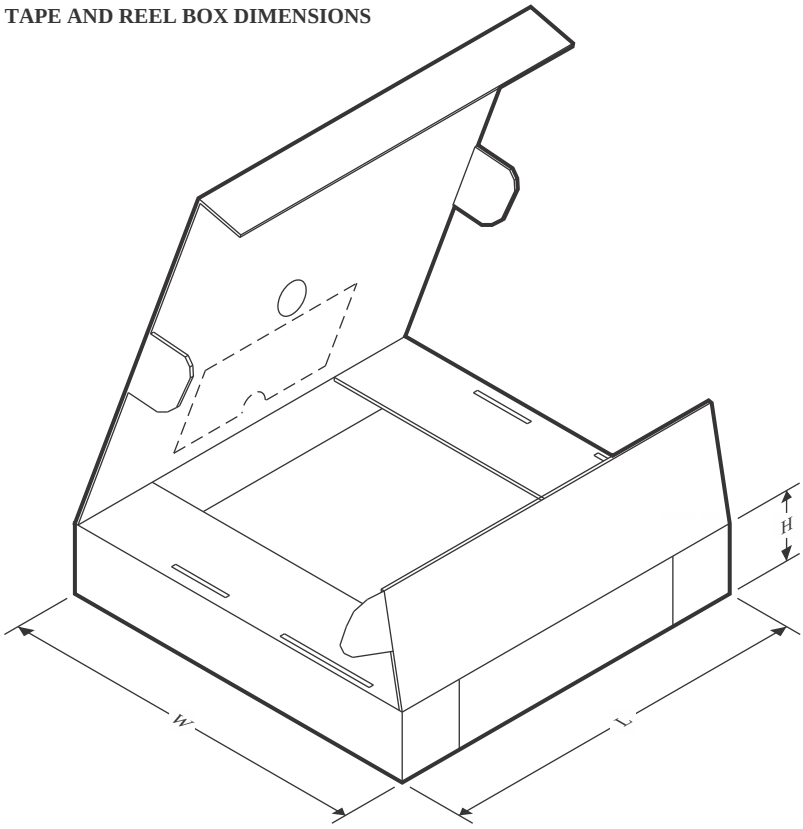

*All dimensions are nominal

Device	Package Type	Package Drawing	Pins	SPQ	Length (mm)	Width (mm)	Height (mm)
TPS65020RHAR	VQFN	RHA	40	2500	353.0	353.0	32.0
TPS65020RHAT	VQFN	RHA	40	250	213.0	191.0	35.0
TPS65020RHATG4	VQFN	RHA	40	250	213.0	191.0	35.0

GENERIC PACKAGE VIEW

RHA 40

VQFN - 1 mm max height

6 x 6, 0.5 mm pitch

PLASTIC QUAD FLATPACK - NO LEAD

This image is a representation of the package family, actual package may vary.
Refer to the product data sheet for package details.

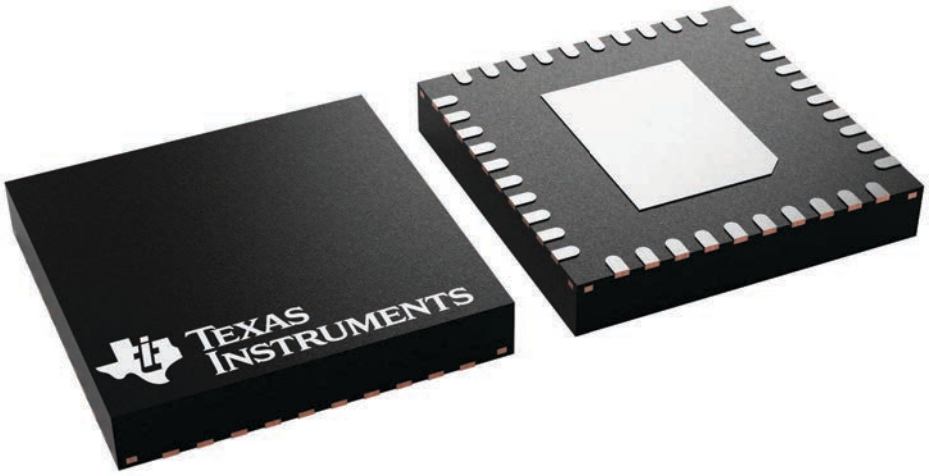

4225870/A

PACKAGE OUTLINE

RHA0040B

VQFN - 1 mm max height

PLASTIC QUAD FLATPACK - NO LEAD

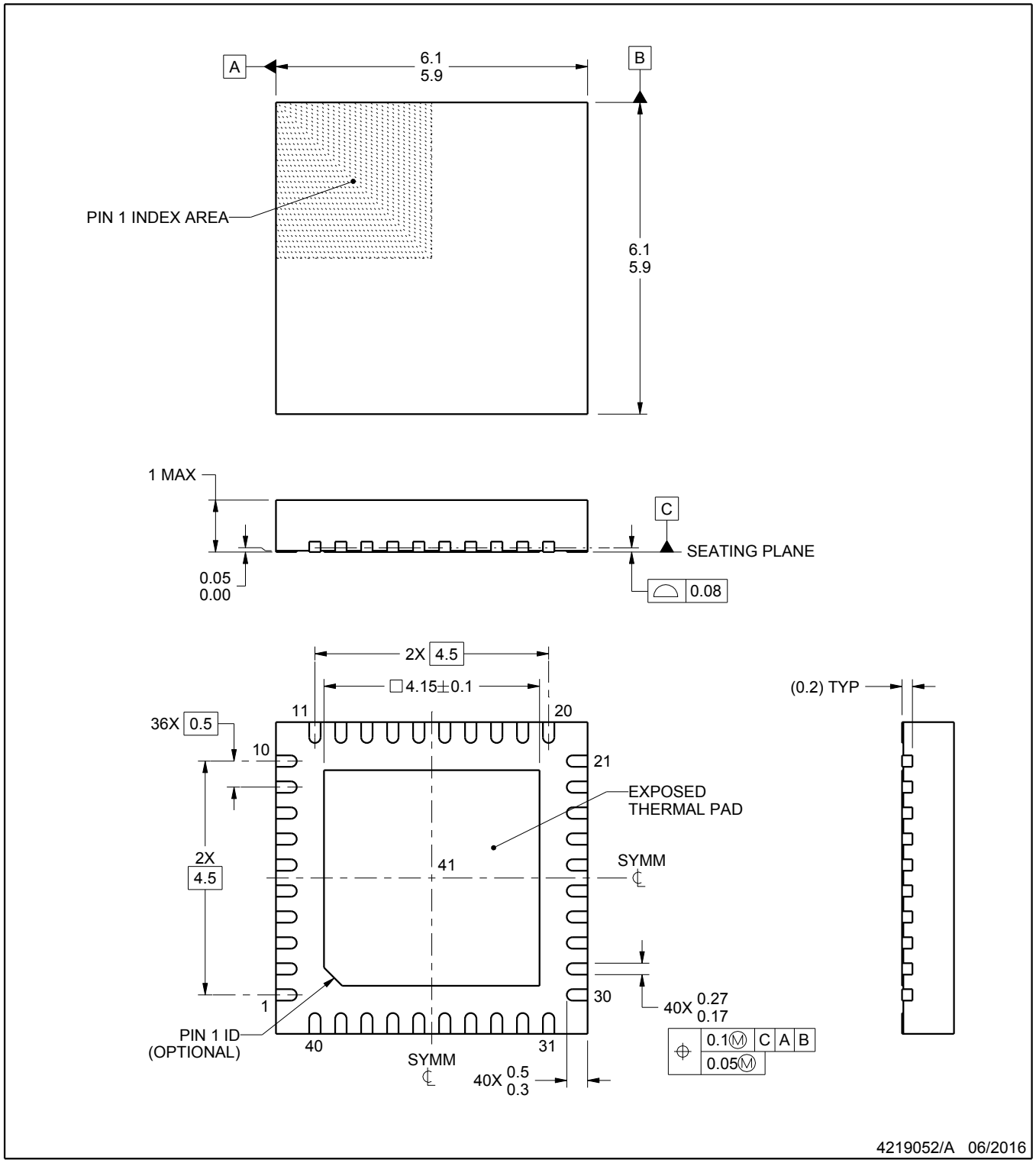

NOTES:

1. All linear dimensions are in millimeters. Any dimensions in parenthesis are for reference only. Dimensioning and tolerancing per ASME Y14.5M.
2. This drawing is subject to change without notice.
3. The package thermal pad must be soldered to the printed circuit board for thermal and mechanical performance.

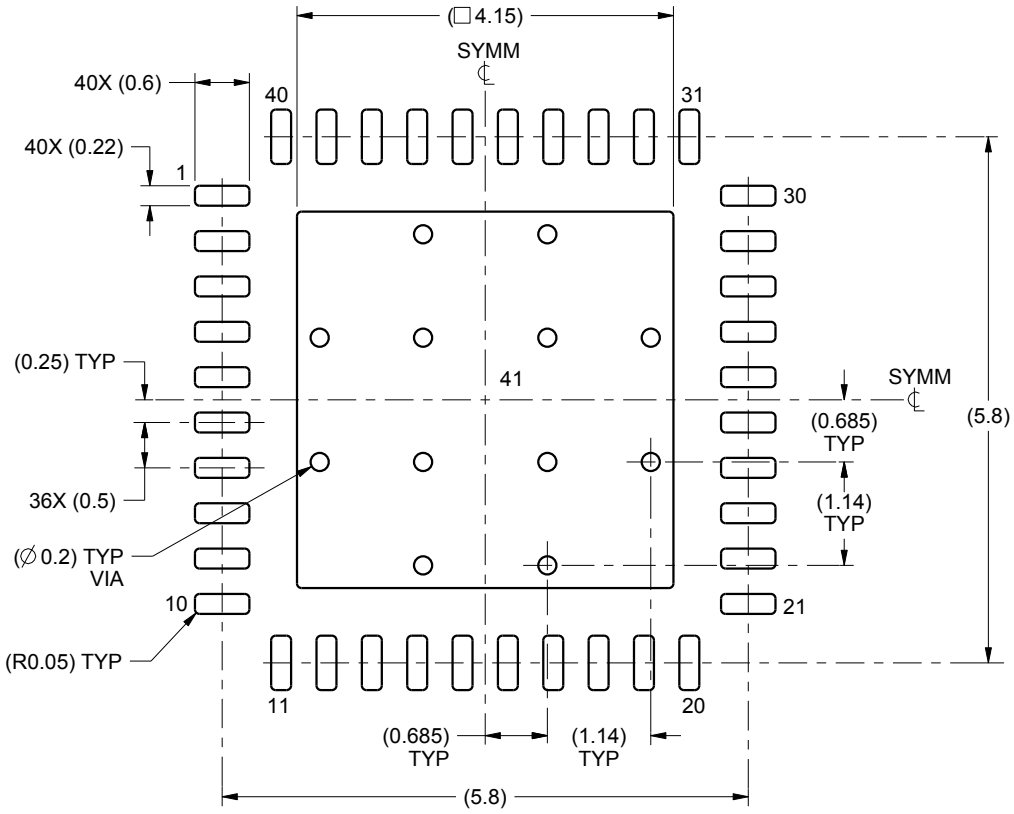

LAND PATTERN EXAMPLE
SCALE:12X

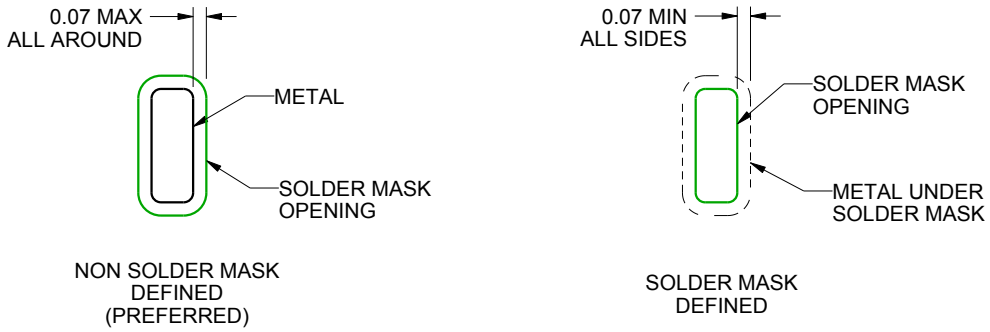

SOLDER MASK DETAILS

4219052/A 06/2016

NOTES: (continued)

4. This package is designed to be soldered to a thermal pad on the board. For more information, see Texas Instruments literature number SLUA271 (www.ti.com/lit/slua271).

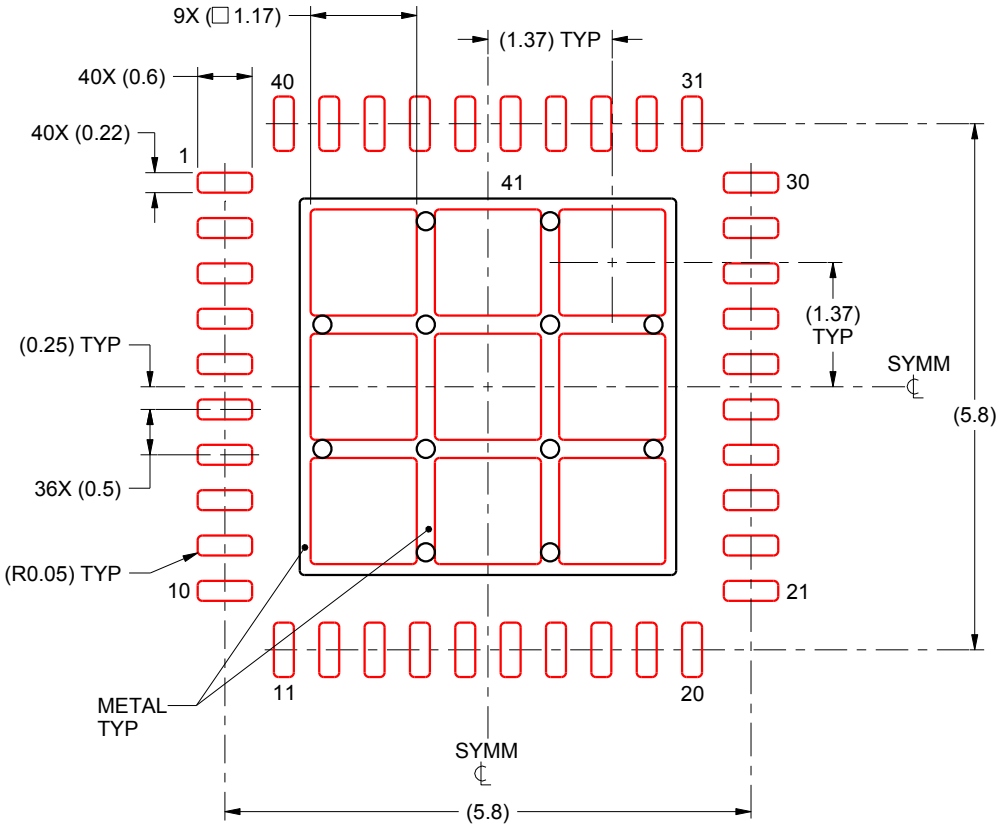

SOLDER PASTE EXAMPLE
BASED ON 0.125 mm THICK STENCIL

EXPOSED PAD 41:
72% PRINTED SOLDER COVERAGE BY AREA UNDER PACKAGE
SCALE:12X

4219052/A 06/2016

NOTES: (continued)

5. Laser cutting apertures with trapezoidal walls and rounded corners may offer better paste release. IPC-7525 may have alternate design recommendations.

IMPORTANT NOTICE AND DISCLAIMER

TI PROVIDES TECHNICAL AND RELIABILITY DATA (INCLUDING DATASHEETS), DESIGN RESOURCES (INCLUDING REFERENCE DESIGNS), APPLICATION OR OTHER DESIGN ADVICE, WEB TOOLS, SAFETY INFORMATION, AND OTHER RESOURCES “AS IS” AND WITH ALL FAULTS, AND DISCLAIMS ALL WARRANTIES, EXPRESS AND IMPLIED, INCLUDING WITHOUT LIMITATION ANY IMPLIED WARRANTIES OF MERCHANTABILITY, FITNESS FOR A PARTICULAR PURPOSE OR NON-INFRINGEMENT OF THIRD PARTY INTELLECTUAL PROPERTY RIGHTS.

These resources are intended for skilled developers designing with TI products. You are solely responsible for (1) selecting the appropriate TI products for your application, (2) designing, validating and testing your application, and (3) ensuring your application meets applicable standards, and any other safety, security, regulatory or other requirements.

These resources are subject to change without notice. TI grants you permission to use these resources only for development of an application that uses the TI products described in the resource. Other reproduction and display of these resources is prohibited. No license is granted to any other TI intellectual property right or to any third party intellectual property right. TI disclaims responsibility for, and you fully indemnify TI and its representatives against any claims, damages, costs, losses, and liabilities arising out of your use of these resources.

TI’s products are provided subject to TI’s Terms of Sale, TI’s General Quality Guidelines, or other applicable terms available either on ti.com or provided in conjunction with such TI products. TI’s provision of these resources does not expand or otherwise alter TI’s applicable warranties or warranty disclaimers for TI products. Unless TI explicitly designates a product as custom or customer-specified, TI products are standard, catalog, general purpose devices.

TI objects to and rejects any additional or different terms you may propose.

Copyright © 2026, Texas Instruments Incorporated

Last updated 10/2025