TPS6116xA White LED Driver with PWM Brightness Control in 2-mm x 2-mm WSON Package

1 Features

- Input Voltage Range: 2.7 V to 18 V
- 26-V Open LED Protection for TPS61160A
  38-V Open LED Protection for TPS61161A
- 200mV Reference Voltage With ±2% Accuracy
- PWM Interface for Brightness Control
- Built-in Soft Start
- Up to 90% Efficiency
- 2-mm × 2-mm × 0.8-mm 6-Pin WSON Package With Thermal Pad

2 Applications

- Cellular Phones
- Portable Media Players
- Ultra Mobile Devices
- GPS Receivers
- White LED Backlighting for Media Form Factor Display

3 Description

With a 40-V rated integrated switch FET, the TPS61160A/61A is a boost converter that drives LEDs in series. The boost converter runs at 600-kHz fixed switching frequency to reduce output ripple, improve conversion efficiency, and allows for the use of small external components.

The default white LED current is set with the external sensor resistor R_{set}, and the feedback voltage is regulated to 200 mV, as shown in the typical application. During the operation, the LED current can be controlled by a pulse width modulation (PWM) signal applied to the CTRL pin through which the duty cycle determines the feedback reference voltage. In PWM dimming mode, the TPS61160A/61A does not burst the LED current; therefore, it does not generate audible noises on the output capacitor. For maximum protection, the device features integrated open LED protection that disables the TPS61160A/61A to prevent the output from exceeding the absolute maximum ratings during open LED conditions.

The TPS61160A/61A is available in a space-saving, 2-mm × 2-mm WSON package with thermal pad.

Device Information(1)

PART NUMBER	PACKAGE	OPEN LED PROTECTION
TPS61160A	WSON (6)	TPS61160A use 26 V (typical)
TPS61161A		TPS61161A use 38 V (typical)

(1) For all available packages, see the orderable addendum at the end of the data sheet.

Typical Application of TPS61161A

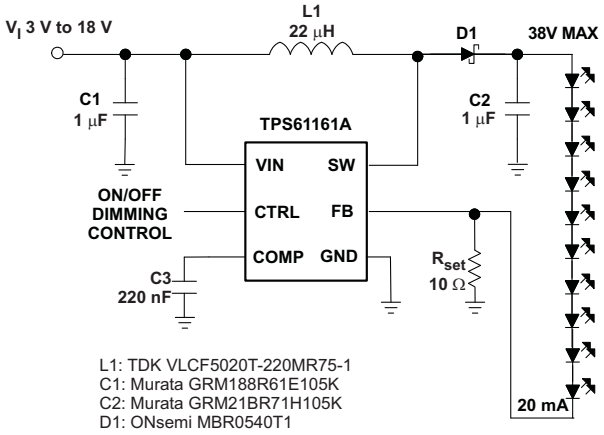

An IMPORTANT NOTICE at the end of this data sheet addresses availability, warranty, changes, use in safety-critical applications, intellectual property matters and other important disclaimers. PRODUCTION DATA.

Table of Contents

1 Features ... 1
2 Applications ... 1
3 Description ... 1
4 Revision History ... 2
5 Pin Configuration and Functions ... 3
6 Specifications ... 4
6.1 Absolute Maximum Ratings ... 4
6.2 ESD Ratings ... 4
6.3 Recommended Operating Conditions ... 4
6.4 Thermal Information ... 5
6.5 Dissipation Ratings ... 5
6.6 Electrical Characteristics ... 6
6.7 Typical Characteristics ... 7
7 Detailed Description ... 9
7.1 Overview ... 9
7.2 Functional Block Diagram ... 9
7.3 Feature Description ... 9
7.4 Device Functional Modes ... 11
8 Application and Implementation ... 12
8.1 Application Information ... 12
8.2 Typical Applications ... 12
9 Power Supply Recommendations ... 20
10 Layout ... 21
10.1 Layout Guidelines ... 21
10.2 Layout Example ... 21
10.3 Thermal Considerations ... 21
11 Device and Documentation Support ... 22
11.1 Device Support ... 22
11.2 Documentation Support ... 22
11.3 Related Links ... 22
11.4 Receiving Notification of Documentation Updates ... 22
11.5 Community Resources ... 22
11.6 Trademarks ... 22
11.7 Electrostatic Discharge Caution ... 22
11.8 Glossary ... 23
12 Mechanical, Packaging, and Orderable Information ... 23

4 Revision History

NOTE: Page numbers for previous revisions may differ from page numbers in the current version.

Changes from Revision B (October 2014) to Revision C — **Page**

- Changed *Handling Ratings* to *ESD Ratings;* moved storage temperature to *Abs Max t*able ... 4
- Deleted the "Duty" rows the Recommended Operating Conditions; added "t_{PWM_MIN}" row ... 4
- Added *Receiving Notification of Documentation Updates* and *Community Resources* ... 22

Changes from Revision A (July 2011) to Revision B — **Page**

- Added *Device Information* and *Handling Rating* tables, *Feature Description*, *Device Functional Modes*, *Application and Implementation*, *Power Supply Recommendations*, *Layout*, *Device and Documentation Support*, and *Mechanical, Packaging, and Orderable Information* sections; moved some curves to *Application Curves* section; change "QFN" to "SON" ... 1
- Changed (reversed) the Vi=5V and Vi=3.6V characteristic labels in Figure 3 ... 7

Changes from Original (March 2009) to Revision A — **Page**

- Deleted "6 LEDs" and "10 LEDs" from the second feature bullet for TPS61160A and TPS61161A Open-LED Protection, respectively ... 1
- Deleted "for up to 10 LEDs in Series" from title ... 1
- Added "38V Max" to Typical Application of TPS61161A, top of LED string ... 1
- Changed from "...for driving up to 10 white LED" to "...for driving white LED" in first sentence of OPERATION section. ... 9
- Changed text of last sentence in "OPEN LED PROTECTION" section to clarify circuit description ... 10
- Changed Figure 11 to show separate terminals for COMP and FB ... 11
- Changed Li-Ion Driver for 6 White LEDs With External PWM Dimming Network to clarify schematic ... 15

Copyright © 2009–2016, Texas Instruments Incorporated

5 Pin Configuration and Functions

DRV Package
6-Pin WSON With Thermal Pad
Top View

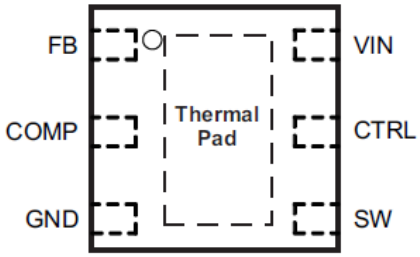

Pin Functions

PIN		I/O	DESCRIPTION
NAME	NO.		
COMP	2	O	Output of the transconductance error amplifier. Connect an external capacitor to this pin to compensate the regulator.
CTRL	5	I	Control pin of the boost regulator. Enable and disable device. PWM signal can be applied to the pin for LED brightness dimming as well.
FB	1	I	Feedback pin for current. Connect the sense resistor from FB to GND.
GND	3	O	Ground
SW	4	I	This is the switching node of the IC. Connect the inductor between the VIN and SW pin. This pin is also used to sense the output voltage for open LED protection
VIN	6	I	The input supply pin for the IC. Connect VIN to a supply voltage between 2.7 V and 18 V.
Thermal Pad			The thermal pad should be soldered to the analog ground plane. If possible, use thermal via to connect to ground plane for ideal power dissipation.

Copyright © 2009–2016, Texas Instruments Incorporated

6 Specifications

6.1 Absolute Maximum Ratings

over operating free-air temperature range (unless otherwise noted)(1)

		MIN	MAX	UNIT
V_I	Supply voltages on VIN(2)	–0.3	20	V
	Voltages on CTRL(2)	–0.3	20	V
	Voltage on FB and COMP(2)	–0.3	3	V
	Voltage on SW(2)	–0.3	40	V
P_D	Continuous power dissipation	See *Dissipation Ratings*		
T_J	Operating junction temperature	–40	150	°C
T_{stg}	Storage temperature	–65	150	°C

(1) Stresses beyond those listed under *Absolute Maximum Ratings* may cause permanent damage to the device. These are stress ratings only, and functional operation of the device at these or any other conditions beyond those indicated under *Recommended Operating Conditions* is not implied. Exposure to absolute-maximum-rated conditions for extended periods may affect device reliability.
(2) All voltage values are with respect to network ground terminal.

6.2 ESD Ratings

			MIN	MAX	UNIT
$V_{(ESD)}$	Electrostatic discharge	Human body model (HBM), per ANSI/ESDA/JEDEC JS-001, all pins(1)		4000	V
		Charged device model (CDM), per JEDEC specification JESD22-C101, all pins(2)		1000	

(1) JEDEC document JEP155 states that 500-V HBM allows safe manufacturing with a standard ESD control process.
(2) JEDEC document JEP157 states that 250-V CDM allows safe manufacturing with a standard ESD control process.

6.3 Recommended Operating Conditions

		MIN	NOM	MAX	UNIT
V_I	Input voltage, V_{IN}	2.7		18	V
V_O	Output voltage	V_{IN}		38	V
L	Inductor(1)	10		22	µH
f_{dim}	PWM dimming frequency(2)	5		100	kHz
t_{PWM_MIN}	Minimum pulse width at PWM input		50		ns
C_{IN}	Input capacitor	1			µF
C_O	Output capacitor(1)	0.47		10	µF
T_A	Operating ambient temperature	–40		85	°C
T_J	Operating junction temperature	–40		125	°C

(1) These values are recommended values that have been successfully tested in several applications. Other values may be acceptable in other applications but should be fully tested by the user.
(2) The device can support the frequency range from 1 kHz to 5 kHz, based on the specification, t_{off} . The output ripple needs to be considered in the range of 1 kHz to 5 kHz.

Copyright © 2009–2016, Texas Instruments Incorporated

6.4 Thermal Information

THERMAL METRIC[1]		TPS61160A, TPS61161A	UNIT
		DRV (WSON)	
		6 PINS	
$R_{\theta JA}$	Junction-to-ambient thermal resistance	140	°C/W
$R_{\theta JC(top)}$	Junction-to-case (top) thermal resistance	20	

(1) For more information about traditional and new thermal metrics, see the *IC Package Thermal Metrics* application report, SPRA953.

6.5 Dissipation Ratings

BOARD PACKAGE	$R_{\theta JC}$	$R_{\theta JA}$	DERATING FACTOR ABOVE T_A = 25°C	T_A < 25°C	T_A = 70°C	T_A = 85°C
Low-K[1]DRV	20°C/W	140°C/W	7.1 mW/°C	715 mW	395 mW	285 mW
High-K [2]DRV	20°C/W	65°C/W	15.4 mW/°C	1540 mW	845 mW	615 mW

(1) The JEDEC low-K (1s) board used to derive this data was a 3 in × 3 in, two-layer board with 2-ounce copper traces on top of the board.
(2) The JEDEC high-K (2s2p) board used to derive this data was a 3 in × 3 in, multilayer board with 1-ounce internal power and ground planes and 2-ounce copper traces on top and bottom of the board.

Copyright © 2009–2016, Texas Instruments Incorporated

6.6 Electrical Characteristics

V_{IN} = 3.6 V, CTRL = V_{IN}; for Min/Max values T_A = –40°C to 85°C, typical values are at T_A = 25°C (unless otherwise noted)

PARAMETER		TEST CONDITIONS	MIN	TYP	MAX	UNIT
SUPPLY CURRENT						
V_I	Input voltage range, V_{IN}		2.7		18	V
I_Q	Operating quiescent current into V_{IN}	Device PWM switching no load			1.8	mA
I_{SD}	Shutdown current	CRTL = GND, V_{IN} = 4.2 V			1	µA
UVLO	Undervoltage lockout threshold	VIN falling		2.2	2.5	V
V_{hys}	Undervoltage lockout hysteresis			70		mV
ENABLE AND REFERENCE CONTROL						
$V_{(CTRLh)}$	CTRL logic high voltage	V_{IN} = 2.7 V to 18 V	1.2			V
$V_{(CTRLl)}$	CTRL logic low voltage	V_{IN} = 2.7 V to 18 V			0.4	V
$R_{(CTRL)}$	CTRL pull down resistor		400	800	1600	kΩ
t_{off}	CTRL pulse width to shutdown	CTRL high to low	2.5			ms
VOLTAGE AND CURRENT CONTROL						
V_{REF}	Voltage feedback regulation voltage		196	200	204	mV
$V_{(REF_PWM)}$	Voltage feedback regulation voltage under brightness control	V_{FB} = 50 mV	47	50	53	mV
		V_{FB} = 20 mV	17	20	23	
I_{FB}	Voltage feedback input bias current	V_{FB} = 200 mV			2	µA
f_S	Oscillator frequency		500	600	700	kHz
D_{max}	Maximum duty cycle	V_{FB} = 100 mV	90%	93%		
t_{min_on}	Minimum on pulse width			40		ns
I_{sink}	Comp pin sink current			100		µA
I_{source}	Comp pin source current			100		µA
G_{ea}	Error amplifier transconductance		240	320	400	µmho
R_{ea}	Error amplifier output resistance			6		MΩ
f_{ea}	Error amplifier crossover frequency	5 pF connected to COMP		500		kHz
POWER SWITCH						
$R_{DS(on)}$	N-channel MOSFET on-resistance	V_{IN} = 3.6 V		0.3	0.6	Ω
		V_{IN} = 3 V			0.7	
I_{LN_NFET}	N-channel leakage current	V_{SW} = 35 V, T_A = 25°C			1	µA
OC and OLP						
I_{LIM}	N-Channel MOSFET current limit	D = D_{max}	0.56	0.7	0.84	A
I_{LIM_Start}	Start up current limit	D = D_{max}		0.4		A
t_{Half_LIM}	Time step for half current limit			5		ms
V_{ovp}	Open LED protection threshold	Measured on the SW pin, TPS61160A TPS61161A	25 37	26 38	27 39	V
$V_{(FB_OVP)}$	Open LED protection threshold on FB	Measured on the FB pin, percentage of Vref, Vref = 200 mV and 20 mV		50%		
t_{REF}	V_{REF} filter time constant			180		µs
t_{step}	V_{REF} ramp up time			213		µs
THERMAL SHUTDOWN						
$T_{shutdown}$	Thermal shutdown threshold			160		°C
$T_{hysteresis}$	Thermal shutdown threshold hysteresis			15		°C

Copyright © 2009–2016, Texas Instruments Incorporated

6.7 Typical Characteristics

Table 1. Table of Graphs

		FIGURE
Efficiency TPS61160A/61A	V_{IN} = 3.6 V; 4, 6, 8, 10 LEDs; L = 22 µH	Figure 1
Efficiency TPS61160A		Figure 2
Efficiency TPS61161A		Figure 3
Current limit	T_A = 25°C	Figure 4
Current limit		Figure 5
PWM dimming linearity	V_{IN} = 3.6 V; PWM Freq = 10 kHz and 40 kHz	Figure 6
Output ripple at PWM dimming	8 LEDs; V_{IN} = 3.6 V; I_{LOAD} = 20 mA; PWM Freq = 10 kHz	Figure 7
Switching waveform	8 LEDs; V_{IN} = 3.6 V; I_{LOAD} = 20 mA; L = 22 µH	Figure 8
Start-up	8 LEDs; V_{IN} = 3.6 V; I_{LOAD} = 20 mA; L =22 µH	Figure 9
Open LED protection	8 LEDs; V_{IN} = 3.6 V; I_{LOAD} = 20 mA; L = 22 µH	Figure 10

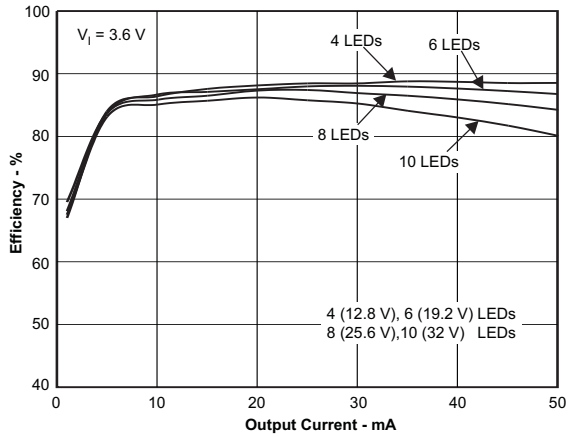

Figure 1. Efficiency vs Output Current

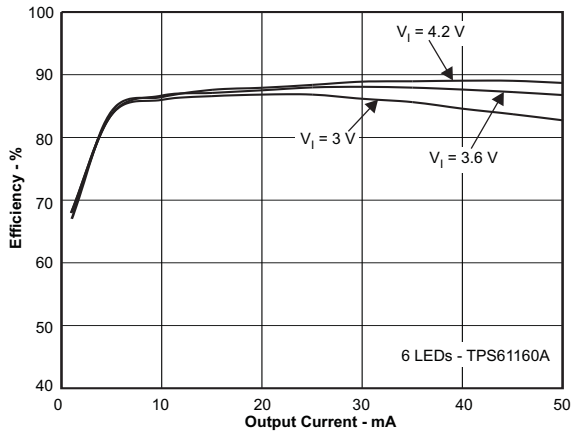

Figure 2. Efficiency vs Output Current

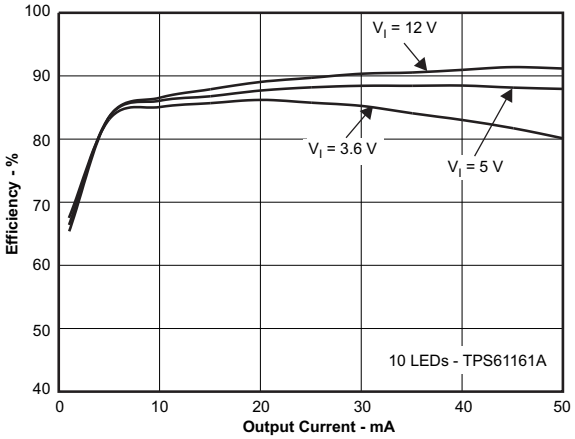

Figure 3. Efficiency vs Output Current

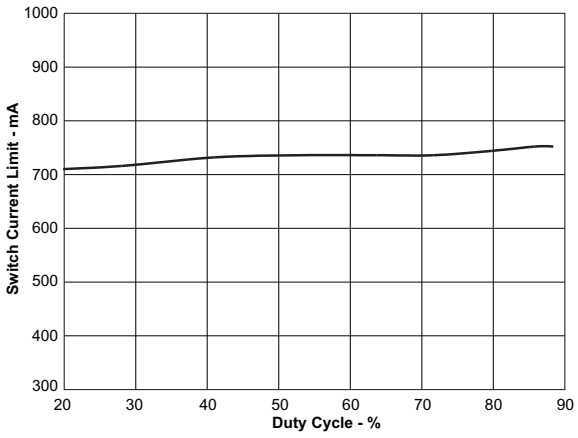

Figure 4. Switch Current Limit vs Duty Cycle

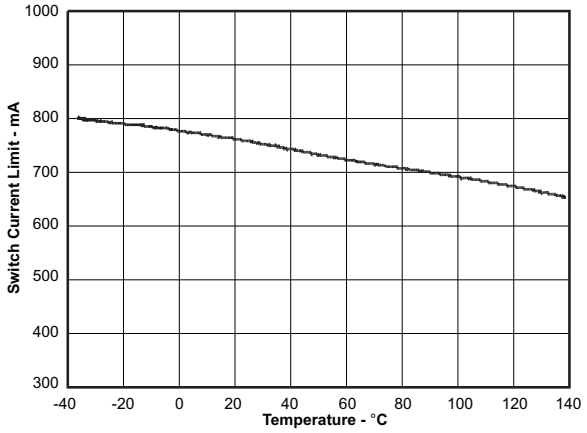

Figure 5. Switch Current Limit vs Temperature

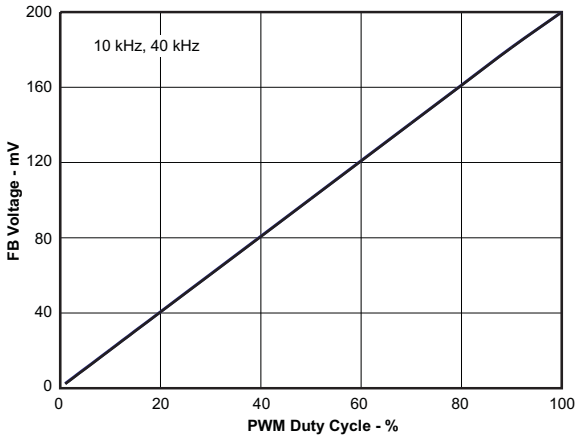

Figure 6. FB Voltage vs PWM Duty Cycle

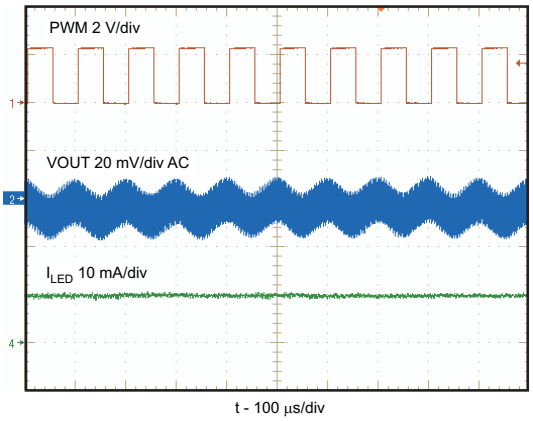

Figure 7. Output Ripple at PWM Dimming

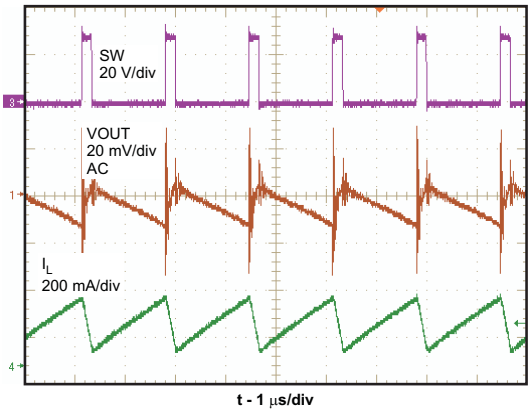

Figure 8. Switching Waveform

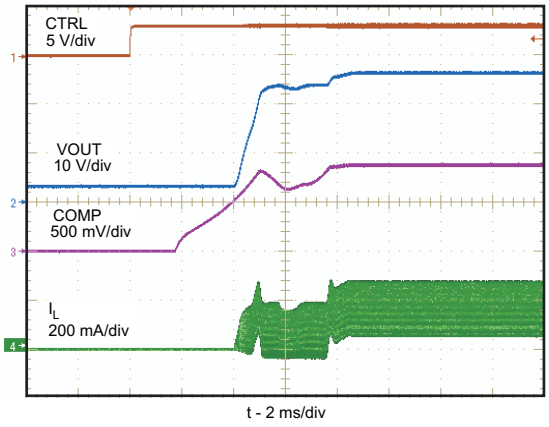

Figure 9. Start-Up

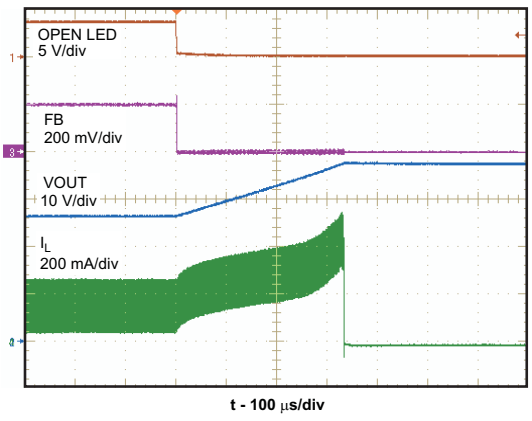

Figure 10. Open LED Protection

Copyright © 2009–2016, Texas Instruments Incorporated

7 Detailed Description

7.1 Overview

The TPS61160A/61A is a high-efficiency, high output voltage boost converter in small package size that is ideal for driving white LED in series. The serial LED connection provides even illumination by sourcing the same output current through all LEDs, eliminating the need for expensive factory calibration. The device integrates 40-V/0.7-A switch FET and operates in pulse width modulation (PWM) with 600-kHz fixed switching frequency. For operation see the block diagram. The duty cycle of the converter is set by the error amplifier output and the current signal applied to the PWM control comparator. The control architecture is based on traditional current-mode control; therefore, a slope compensation is added to the current signal to allow stable operation for duty cycles larger than 50%. The feedback loop regulates the FB pin to a low reference voltage (200 mV typical), reducing the power dissipation in the current sense resistor.

7.2 Functional Block Diagram

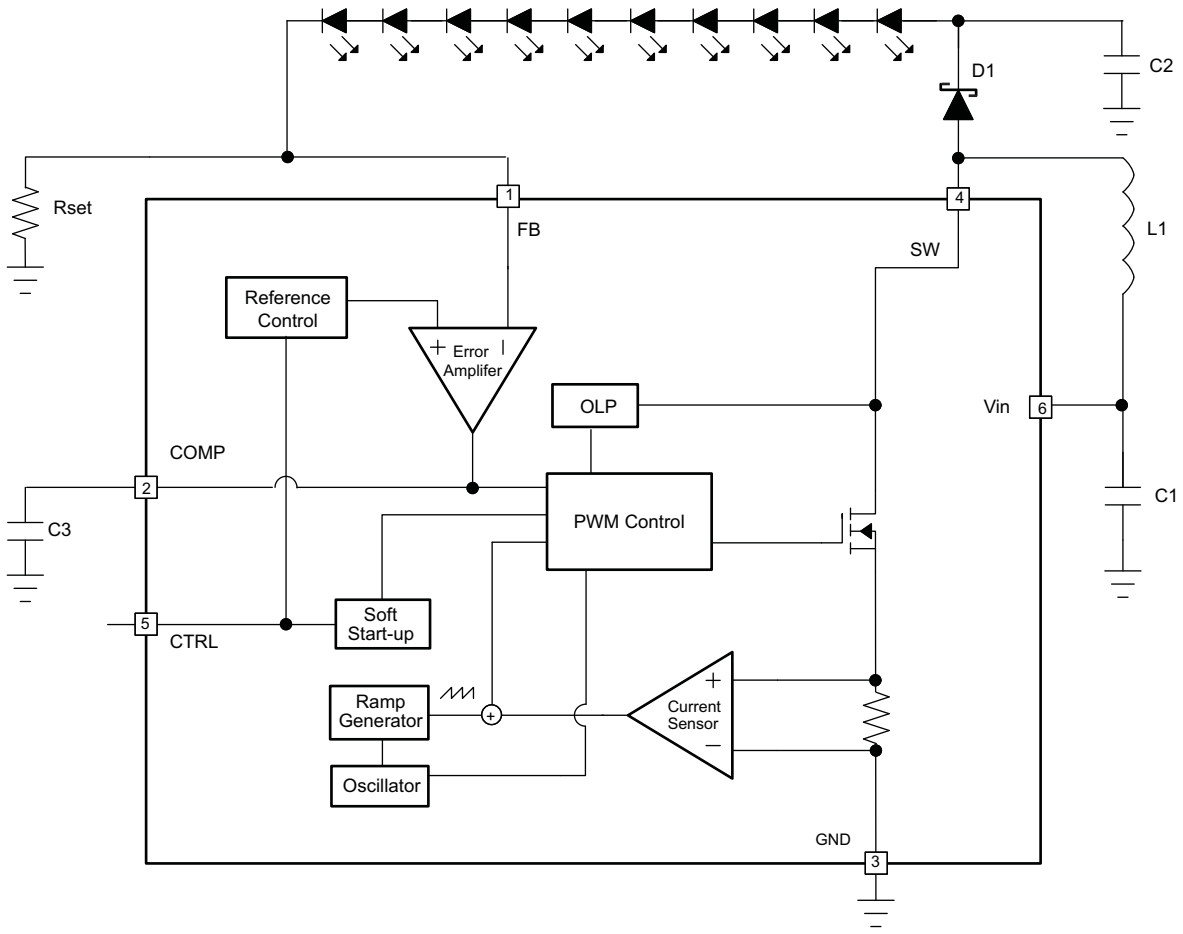

7.3 Feature Description

7.3.1 Soft Start-Up

Soft-start circuitry is integrated into the IC to avoid a high inrush current during start-up. After the device is enabled, the voltage at FB pin ramps up to the reference voltage in 32 steps, each step takes 213 μs. This ensures that the output voltage rises slowly to reduce the input current. Additionally, for the first 5 msec after the COMP voltage ramps, the current limit of the switch is set to half of the normal current limit spec. During this period, the input current is kept below 400 mA (typical). See the start-up waveform of a typical example, Figure 9.

Copyright © 2009–2016, Texas Instruments Incorporated

Feature Description (continued)

7.3.2 Open LED Protection

Open LED protection circuitry prevents IC damage as the result of white LED disconnection. The TPS61160A/61A monitors the voltage at the SW pin and FB pin during each switching cycle. The circuitry turns off the switch FET and shuts down the IC when both of the following conditions persist for 8 switching clock cycles: (1) the SW voltage exceeds the V_{OVP} threshold and (2) the FB voltage is less than half of regulation voltage. As a result, the output voltage falls to the level of the input supply. The device remains in shutdown mode until it is enabled by toggling the CTRL pin logic. To allow the use of inexpensive low-voltage output capacitor, the TPS61160A/61A has different open lamp protection thresholds. The threshold is set at 26 V for the TPS61160A and 38 V for the TPS61161A. Select the appropriate device so that the product of the number of external LEDs and each LED's maximum forward voltage plus the 200 mV reference voltage does not exceed the minimum OVP threshold or (n_{LEDS} X $V_{LED(MAX)}$) + 200 mV ≤ $V_{OVP(MIN)}$.

7.3.3 Shutdown

The TPS61160A/61A enters shutdown mode when the CTRL voltage is logic low for more than 2.5 ms. During shutdown, the input supply current for the device is less than 1 μA (max). Although the internal FET does not switch in shutdown, there is still a DC current path between the input and the LEDs through the inductor and Schottky diode. The minimum forward voltage of the LED array must exceed the maximum input voltage to ensure that the LEDs remain off in shutdown; however, in the typical application with two or more LEDs, the forward voltage is large enough to reverse bias the Schottky and keep leakage current low.

7.3.4 Current Program

The FB voltage is regulated by a low 0.2-V reference voltage. The LED current is programmed externally using a current-sense resistor in series with the LED string. The value of the RSET is calculated using Equation 1:

$$I_{LED} = \frac{V_{FB}}{R_{SET}} \quad (1)$$

where

- I_{LED} = output current of LEDs
- V_{FB} = regulated voltage of FB
- R_{SET} = current sense resistor

The output current tolerance depends on the FB accuracy and the current sensor resistor accuracy.

7.3.5 PWM Brightness Dimming

When the CTRL pin is constantly high, the FB voltage is regulated to 200 mV typically. However, the CTRL pin allows a PWM signal to reduce this regulation voltage; therefore, it achieves LED brightness dimming. The relationship between the duty cycle and FB voltage is given by Equation 2.

$$V_{FB} = Duty \times 200\ mV \quad (2)$$

where

- Duty = duty cycle of the PWM signal
- 200 mV = internal reference voltage

As shown in Figure 11, the IC chops up the internal 200-mV reference voltage at the duty cycle of the PWM signal. The pulse signal is then filtered by an internal low pass filter. The output of the filter is connected to the error amplifier as the reference voltage for the FB pin regulation. Therefore, although a PWM signal is used for brightness dimming, only the WLED DC current is modulated, which is often referred as analog dimming. This eliminates the audible noise which often occurs when the LED current is pulsed in replica of the frequency and duty cycle of PWM control. Unlike other scheme which filters the PWM signal for analog dimming, TPS61160A/61A regulation voltage is independent of the PWM logic voltage level which often has large variations.

For optimum performance, use the PWM dimming frequency in the range of 5 kHz to 100 kHz. The requirement of minimum dimming frequency comes from the output ripple. Low frequency causes high output ripple. Because the CTRL pin is logic only pin, applying an external RC filter to the pin does not work.

Copyright © 2009–2016, Texas Instruments Incorporated

Feature Description (continued)

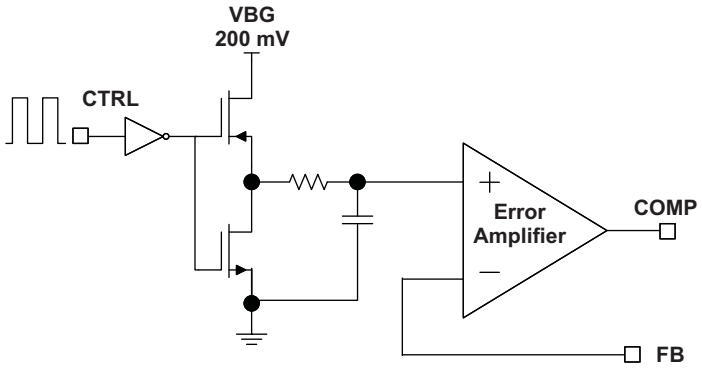

Figure 11. Block Diagram of Programmable FB Voltage Using PWM Signal

To use lower PWM dimming, add an external RC network connected to the FB pin as shown in Figure 15).

7.3.6 Undervoltage Lockout

An undervoltage lockout prevents operation of the device at input voltages below typical 2.2 V. When the input voltage is below the undervoltage threshold, the device is shutdown and the internal switch FET is turned off. If the input voltage rises by undervoltage lockout hysteresis, the IC restarts.

7.3.7 Thermal Shutdown

An internal thermal shutdown turns off the device when the typical junction temperature of 160°C is exceeded. The device is released from shutdown automatically when the junction temperature decreases by 15°C.

7.4 Device Functional Modes

7.4.1 Operation with CTRL

When the CTRL pin is held below the VIL threshold, the device is disabled, and switching is inhibited. The IC quiescent current is reduced in this state. When V_{IN} is above the UVLO threshold, and the CTRL terminal is increased above the VIH threshold the soft-start sequence initiates then the device becomes active.

7.4.2 External PWM Dimming

For assistance in selecting the proper values for Rset, R1-R3, RFLTR, CFLTR and D2 for the specific application, refer to *How to Use Analog Dimming With the TPS6116x* (SLVA471) and/or *Design Tool for Analog Dimming Using a PWM Signal* (http://www.ti.com/lit/zip/slvc366). Also see *Choosing Component Values* section below.

Copyright © 2009–2016, Texas Instruments Incorporated

8 Application and Implementation

NOTE

Information in the following applications sections is not part of the TI component specification, and TI does not warrant its accuracy or completeness. TI's customers are responsible for determining suitability of components for their purposes. Customers should validate and test their design implementation to confirm system functionality.

8.1 Application Information

The TPS61160A/61A provides a complete high-performance LED lighting solution for mobile devices supporting a single string of 6 (TPS61160A) or 10 (TPS61161A) white LEDs.

8.2 Typical Applications

8.2.1 Typical Application of TPS61161A

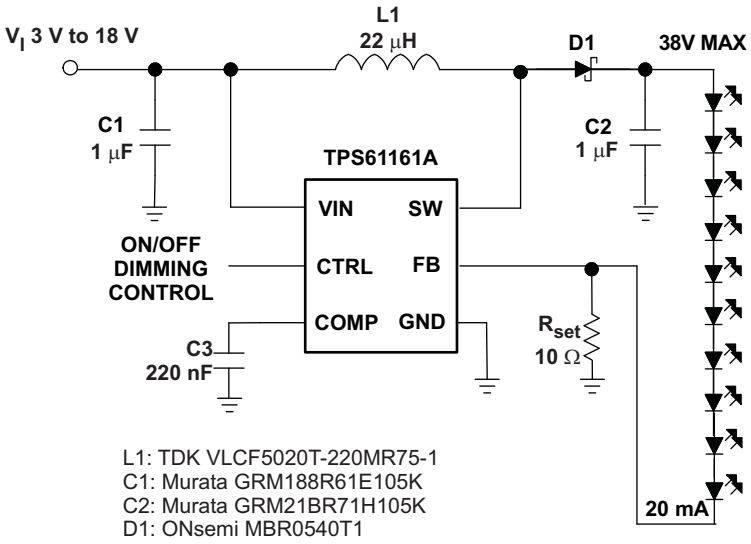

Figure 12. Typical Application of TPS61161A

8.2.1.1 Design Requirements

DESIGN PARAMETER	EXAMPLE VALUE
Inductor	22 µH
Minimum input voltage	3 V
Number of series LED	10
LED maximum forward voltage (Vf)	3.3 V
Schottky diode forward voltage (Vf)	0.2 V
Efficiency (η)	85%
Switching frequency (SW)	600 kHz

Copyright © 2009–2016, Texas Instruments Incorporated

Applying Equation 3 and Equation 4, when V_{IN} is 3 V, 10 LEDs output equivalent to V_{OUT} of 32.2 V, the inductor is 22 μH, the Schottky forward voltage is 0.2 V, the maximum output current is 47 mA in typical condition.

8.2.1.2 Detailed Design Procedure

8.2.1.2.1 Maximum Output Current

The overcurrent limit in a boost converter limits the maximum input current, and thus maximum input power for a given input voltage. Maximum output power is less than maximum input power due to power conversion losses. Therefore, the current limit setting, input voltage, output voltage and efficiency can all change maximum current output. The current limit clamps the peak inductor current; therefore, the ripple has to be subtracted to derive maximum DC current. The ripple current is a function of switching frequency, inductor value and duty cycle. Equation 3 and Equation 4 take into account of all the above factors for maximum output current calculation.

$$I_p = \frac{1}{\left[L \times F_s \times \left(\frac{1}{V_{out} + V_f - V_{in}} + \frac{1}{V_{in}}\right)\right]} \quad (3)$$

where

- I_p = inductor peak to peak ripple
- L = inductor value
- V_f = Schottky diode forward voltage
- Fs = switching frequency
- V_{out} = output voltage of the boost converter. It is equal to the sum of VFB and the voltage drop across LEDs

$$I_{out_max} = \frac{V_{in} \times \left(I_{lim} - I_p / 2\right) \times \eta}{V_{out}} \quad (4)$$

where

- I_{out_max} = maximum output current of the boost converter
- I_{lim} = over current limit
- η = efficiency

8.2.1.2.2 Inductor Selection

The selection of the inductor affects steady state operation as well as transient behavior and loop stability. These factors make it the most important component in power regulator design. There are three important inductor specifications, inductor value, DC resistance and saturation current. Considering inductor value alone is not enough.

The inductor value determines the inductor ripple current. Choose an inductor that can handle the necessary peak current without saturating, according to half of the peak-to-peak ripple current given by Equation 3, pause the inductor DC current given by:

$$I_{in_DC} = \frac{V_{out} \times I_{out}}{V_{in} \times \eta} \quad (5)$$

Inductor values can have ±20% tolerance with no current bias. When the inductor current approaches saturation level, its inductance can decrease 20% to 35% from the 0A value depending on how the inductor vendor defines saturation current. Using an inductor with a smaller inductance value forces discontinuous PWM when the inductor current ramps down to zero before the end of each switching cycle. This reduces the boost converter's maximum output current, causes large input voltage ripple and reduces efficiency. Large inductance value provides much more output current and higher conversion efficiency. For these reasons, a 10 μH to 22 μH inductor value range is recommended. A 22 μH inductor optimized the efficiency for most application while maintaining low inductor peak to peak ripple. *Table 2* lists the recommended inductor for the TPS61160A/61A. When recommending inductor value, the factory has considered –40% and +20% tolerance from its nominal value.

Copyright © 2009–2016, Texas Instruments Incorporated

TPS61160A/61A has built-in slope compensation to avoid sub-harmonic oscillation associated with current mode control. If the inductor value is lower than 10 μH, the slope compensation may not be adequate, and the loop can be unstable. Therefore, customers need to verify the inductor in their application if it is different from the recommended values.

Table 2. Recommended Inductors for TPS61160A/61A

PART NUMBER	L (μH)	DCR MAX (Ω)	SATURATION CURRENT (mA)	SIZE (L × W × H mm)	VENDOR
LQH3NPN100NM0	10	0.3	750	3 × 3 × 1.5	Murata
VLCF5020T-220MR75-1	22	0.4	750	5 × 5 × 2.0	TDK
CDH3809/SLD	10	0.3	570	4 × 4 × 1.0	Sumida
A997AS-220M	22	0.4	510	4 × 4 × 1.8	TOKO

8.2.1.2.3 Schottky Diode Selection

The high switching frequency of the TPS61160A/61A demands a high-speed rectification for optimum efficiency. Ensure that the diode average and peak current rating exceeds the average output current and peak inductor current. In addition, the diode's reverse breakdown voltage must exceed the open LED protection voltage. The ONSemi MBR0540 and the ZETEX ZHCS400 are recommended for TPS61160A/61A.

8.2.1.2.4 Compensation Capacitor Selection

The compensation capacitor C3 (see *Functional Block Diagram*), connected from COMP pin to GND, is used to stabilize the feedback loop of the TPS61160A/61A. Use a 220-nF ceramic capacitor for C3.

8.2.1.2.5 Input and Output Capacitor Selection

The output capacitor is mainly selected to meet the requirements for the output ripple and loop stability. This ripple voltage is related to the capacitor's capacitance and its equivalent series resistance (ESR). Assuming a capacitor with zero ESR, the minimum capacitance needed for a given ripple can be calculated by

$$C_{out} = \frac{(V_{out} - V_{in}) \times I_{out}}{V_{out} \times F_S \times V_{ripple}}$$

where

- V_{ripple} = peak-to-peak output ripple (6)

The additional output ripple component caused by ESR is calculated using:

$$V_{ripple_ESR} = R_{ESR} \times I_{out} \quad (7)$$

Due to its low ESR, Vripple_ESR can be neglected for ceramic capacitors, but must be considered if tantalum or electrolytic capacitors are used.

Care must be taken when evaluating a ceramic capacitor's derating under dc bias, aging and AC signal. For example, larger form factor capacitors (in 1206 size) have a resonant frequencies in the range of the switching frequency. So the effective capacitance is significantly lower. The DC bias can also significantly reduce capacitance. Ceramic capacitors can loss as much as 50% of its capacitance at its rated voltage. Therefore, leave the margin on the voltage rating to ensure adequate capacitance at the required output voltage.

The capacitor in the range of 1 μF to 4.7 μF is recommended for input side. The output requires a capacitor in the range of 0.47 μF to 10 μF. The output capacitor affects the loop stability of the boost regulator. If the output capacitor is below the range, the boost regulator can potentially become unstable. For example, if use the output capacitor of 0.1 μF, a 470 nF compensation capacitor has to be used for the loop stable.

The popular vendors for high value ceramic capacitors are:

TDK (http://www.component.tdk.com/components.php)

Murata (http://www.murata.com/cap/index.html)

Copyright © 2009–2016, Texas Instruments Incorporated

8.2.1.3 Application Curves

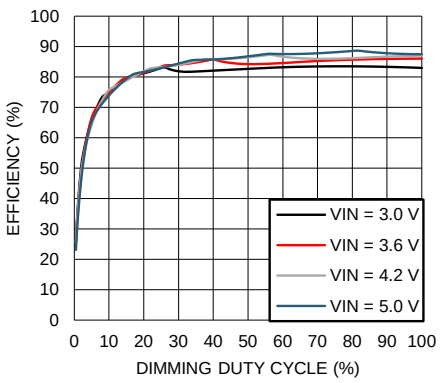

Figure 13. Efficiency vs Dimming Duty Cycle

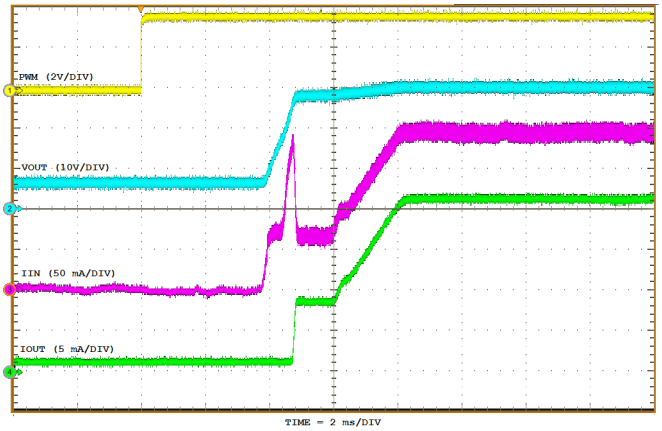

Figure 14. Start-Up with 10 Series LEDs (DPWM = 100%)

8.2.2 Li-Ion Driver for 6 White LEDs

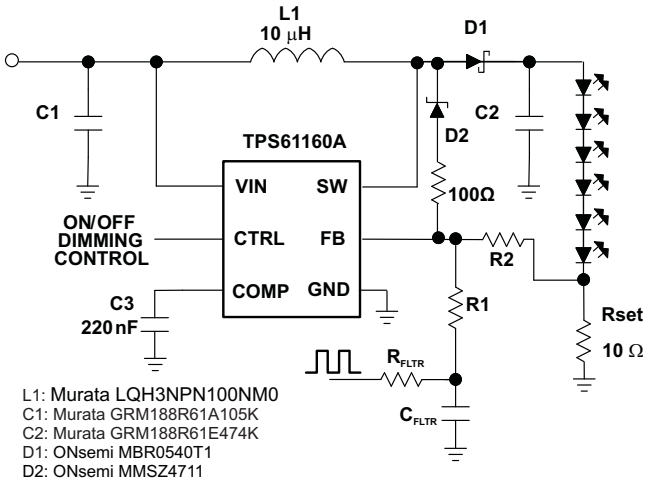

Figure 15. Li-Ion Driver for 6 White LEDs With External PWM Dimming Network

8.2.2.1 Design Requirements

DESIGN PARAMETER	EXAMPLE VALUE
Inductor	22 µH
Minimum input voltage	3 V
Number of series LED	6
LED maximum forward voltage (Vf)	3.2 V
Schottky diode forward voltage (Vf)	0.2 V
Efficiency	82%
Switching frequency (f_{SW})	600 kHz
External PWM output voltage	3 V
External PWM frequency	20 kHz

Copyright © 2009–2016, Texas Instruments Incorporated

Applying Equation 3 and Equation 4, when V_{IN} is 3 V, 6 LEDs output equivalent to V_{OUT} of 19.4 V, the inductor is 22 μH, the Schottky forward voltage is 0.2 V, the maximum output current is 76 mA in typical condition.

8.2.2.2 Detailed Design Procedure

8.2.2.2.1 Choosing Component Values

As per SLVA471, the values of R_{FLTR}, C_{FLTR}, R_1, R_2, and R_{SET} are determined by the system parameters and error tolerance. The main source of LED current error is leakage current from the FB pin. The error gets worse as the LED current decreases. The error due to leakage current is given by *Functional Block Diagram*, where the impedance seen by the FB pin has a major impact. To reduce error due to the leakage current, the impedance seen by the FB pin needs to be small. Because R_2 is much smaller than $R_1 + R_{FLTR}$, R_2 must be chosen to be small to minimize the impedance seen by the FB pin. In general, R_2 must be chosen to be 1 kΩ or less. If greater accuracy at smaller currents is needed, then R_2 must be chosen to be even smaller.

$$\%\text{error} = \frac{I_{FB}}{\frac{V_{FB}}{(R_1 + R_{FLTR}) // R_2} - \frac{D \times V_{PWM(H)} + (1 - D)V_{PWM(L)}}{R_1 + R_{FLTR}}} \quad (8)$$

Once R_2 has been chosen, the value of R_{SET} and $R_1 + R_{FLTR}$ can be calculated using Equation 9, Equation 10, Equation 11, and Equation 12. The individual values of R_1 and R_{FLTR} can be any combination that sums up to $R_1 + R_{FLTR}$. In general, choosing R_1 and R_{FLTR} to be the same value gives a minimum requirement for C_{FLTR}.

$$V_{PWM(min)} = D_{(min)}V_{PWM(H)} + (1 - D_{(min)})V_{PWM(L)} \quad (9)$$

$$V_{PWM(max)} = D_{(max)}V_{PWM(H)} + (1 - D_{(max)})V_{PWM(L)} \quad (10)$$

$$R_{SET} = \frac{V_{FB}\left(V_{PWM(max)} - V_{PWM(min)}\right)}{V_{PWM(max)}I_{LED(max)} - V_{FB}I_{LED(max)} + V_{FB}I_{LED(min)} - V_{PWM(min)}I_{LED(min)}} \quad (11)$$

$$R_1 + R_{FLTR} = \frac{R_2(I_{LED(max)}(V_{PWM(max)} - V_{FB}) - I_{LED(min)}(V_{PWM(min)} - V_{FB}))}{V_{FB}(I_{LED(max)} - I_{LED(min)})} + \frac{V_{PWM(max)} - V_{PWM(min)}}{I_{LED(max)} - I_{LED(min)}} \quad (12)$$

Finally, C_{FLTR} can be chosen based on the amount of filtering desired or to provide a gradual dimming effect that is popular in many lighting products. At a minimum, C_{FLTR} must be chosen to provide at least 20 dB of attenuation at the PWM frequency. Equation 13 can be used to calculate the minimum capacitor value to provide this attenuation.

$$C_{FLTR} = \frac{1}{2\pi (R_{FLTR} // R_1)\frac{f_{pwm}}{10}} \quad (13)$$

To provide gradual dimming, a large capacitor must be chosen to provide a long transient time when changing the PWM duty cycle. Equation 14 shows how to calculate the recommended corner frequency of the RC filter based on the 10% to 90% rise time. Once the corner frequency is known, it can be used to calculate the required capacitor using Equation 15.

$$f_{RC} = \frac{0.35}{t_r} \quad (14)$$

$$C_{FLTR} = \frac{1}{2\pi (R_{FLTR} // R_1) f_{RC}} \quad (15)$$

For example, a design with R_{FLTR} and R_1 equal to 10 kΩ and a desired rise time of 500 ms requires a corner frequency of 0.7 Hz and a capacitor of 47 μF.

Copyright © 2009–2016, Texas Instruments Incorporated

8.2.2.3 Application Curves

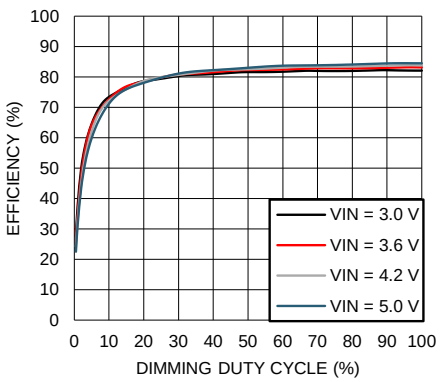

Figure 16. Efficiency vs Dimming Duty Cycle

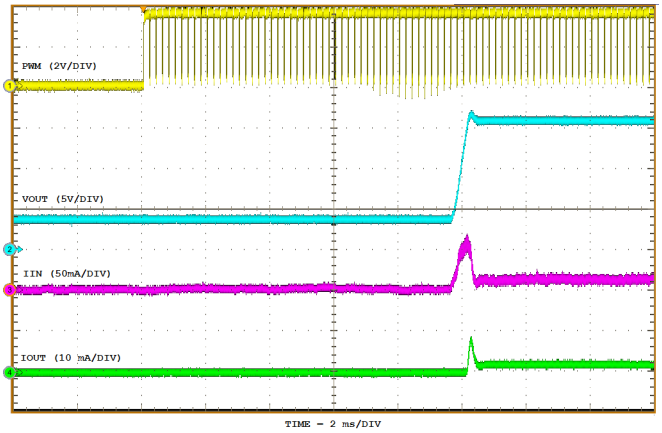

Figure 17. Start-Up with 6 series LEDs (External PWM, DPWM = 10%)

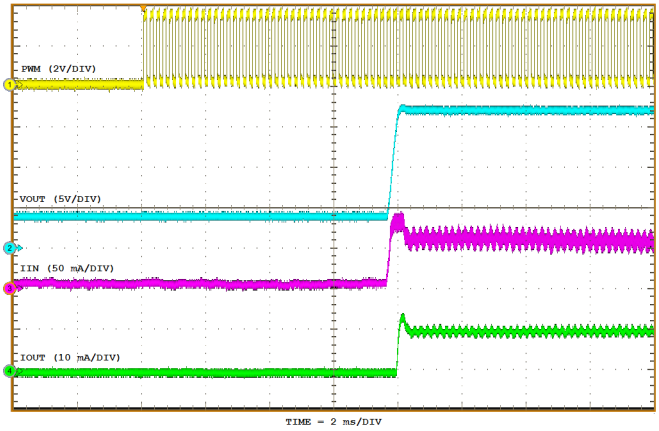

Figure 18. Start-Up with 6 Series LEDs (External PWM, DPWM = 50%)

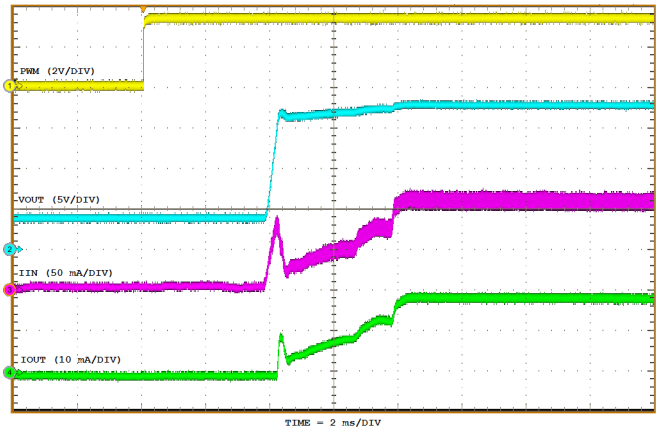

Figure 19. Start-Up with 6 Series LEDs (External PWM, DPWM = 100%)

Copyright © 2009–2016, Texas Instruments Incorporated

8.2.3 Li-Ion Driver for 6 White LEDs With External PWM Dimming Network

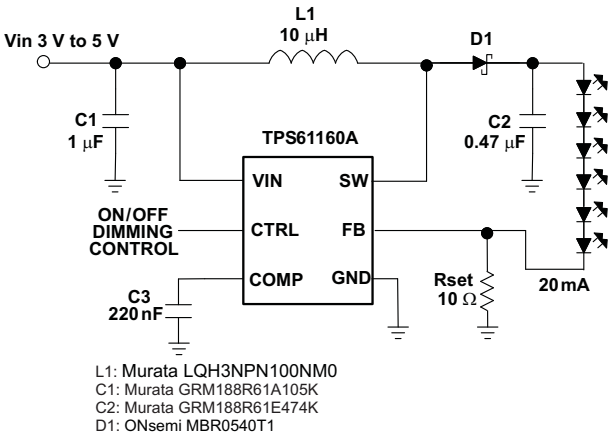

Figure 20. Li-Ion Driver for 6 White LEDs

8.2.3.1 Design Requirements

DESIGN PARAMETER	EXAMPLE VALUE
Inductor	22 µH
Minimum input voltage	3 V
Number of series LED	6
LED maximum forward voltage (Vf)	3.2 V
Schottky diode forward voltage (Vf)	0.2 V
Efficiency (η)	82%
Switching frequency	600 kHz

Applying Equation 3 and Equation 4, when V_{IN} is 3 V, 6 LEDs output equivalent to V_{OUT} of 19.4 V, the inductor is 22 µH, the Schottky forward voltage is 0.2 V, the maximum output current is 76 mA in typical condition.

8.2.3.2 Detailed Design Procedure

See *Detailed Design Procedure*.

8.2.3.3 Application Curves

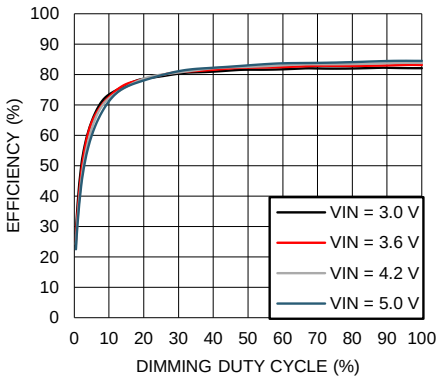

Figure 21. Efficiency vs Duty Cycle

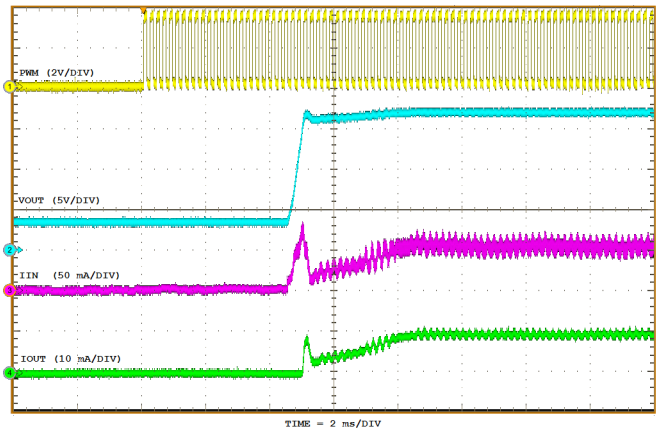

Figure 22. Start-Up with 6 Series LEDs (DPWM = 50%)

Copyright © 2009–2016, Texas Instruments Incorporated

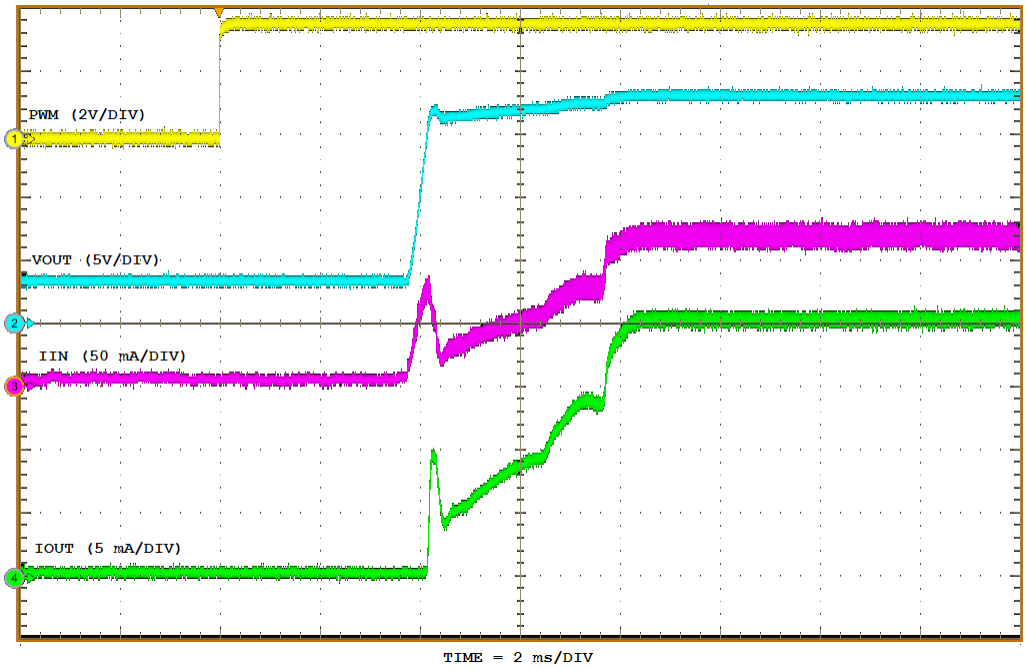

Figure 23. Start-Up with 6 Series LEDs (DPWM = 100%)

8.2.4 Li-Ion Driver for 8 White LEDs

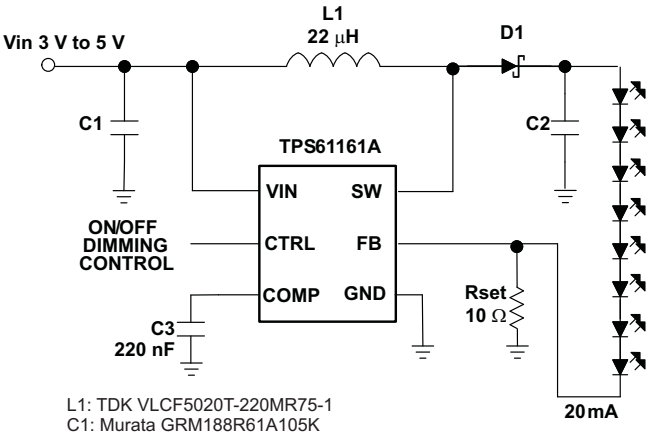

L1: TDK VLCF5020T-220MR75-1
C1: Murata GRM188R61A105K
C2: Murata GRM21BR71H105K
D1: ONsemi MBR0540T1

Figure 24. Li-Ion Driver for 8 White LEDs

8.2.4.1 Design Requirements

DESIGN PARAMETER	EXAMPLE VALUE
LED current	0.02 A
Minimum input voltage	3 V
Number of series LED	8
LED maximum forward voltage (Vf)	3.3 V
Schottky diode forward voltage	0.2 V
Efficiency (η)	86%
Switching frequency	600 kHz

Applying Equation 3 and Equation 4, when V_{IN} is 3 V, 8 LEDs output equivalent to V_{OUT} of 25.8 V, the inductor is 22 µH, the Schottky forward voltage is 0.2 V, the maximum output current is 60 mA in typical condition.

8.2.4.2 Detailed Design Procedure

See *Detailed Design Procedure*.

8.2.4.3 Application Curves

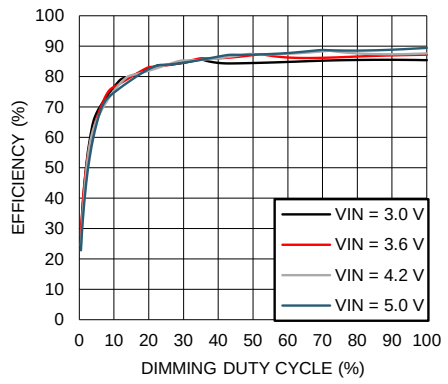

Figure 25. Efficiency vs. Dimming Duty Cycle

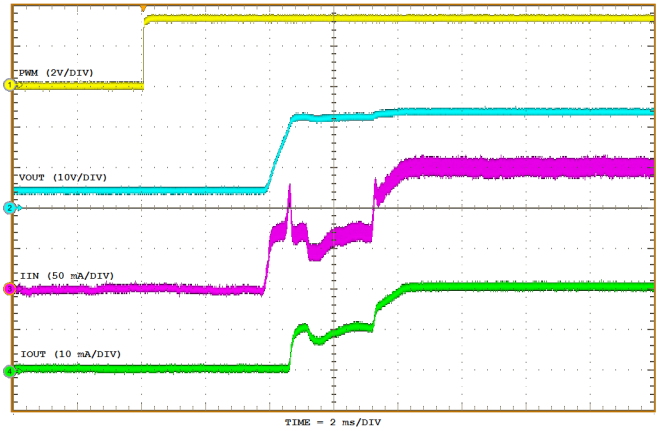

Figure 26. Start-Up with 8 Series LEDs (DPWM = 100%)

9 Power Supply Recommendations

The TPS61160A/61A is designed to operate from an input supply range of 2.7 V to 18 V. This input supply must be well regulated and provide the peak current required by the number of series LEDs and inductor selected.

Copyright © 2009–2016, Texas Instruments Incorporated

10 Layout

10.1 Layout Guidelines

As for all switching power supplies, especially those high frequency and high current ones, layout is an important design step. If layout is not carefully done, the regulator could suffer from instability as well as noise problems. To reduce switching losses, the SW pin rise and fall times are made as short as possible. To prevent radiation of high frequency resonance problems, proper layout of the high frequency switching path is essential. Minimize the length and area of all traces connected to the SW pin and always use a ground plane under the switching regulator to minimize inter-plane coupling. The loop including the PWM switch, Schottky diode, and output capacitor, contains high current rising and falling in nanosecond and should be kept as short as possible. The input capacitor needs not only to be close to the VIN pin, but also to the GND pin in order to reduce the supply ripple of the device. Figure 27 shows a sample layout.

10.2 Layout Example

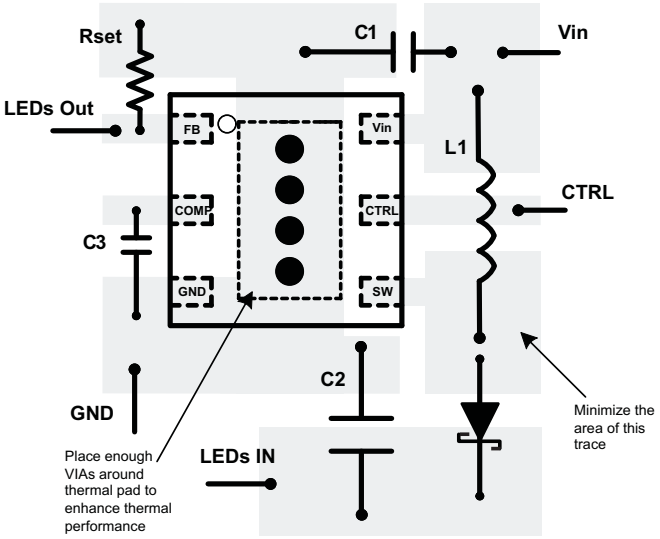

Figure 27. Sample Layout

10.3 Thermal Considerations

The maximum junction temperature of the device must be restricted to 125°C under normal operating conditions. This restriction limits the power dissipation of the TPS61160A/61A. Calculate the maximum allowable dissipation, $P_{D(max)}$, and keep the actual dissipation less than or equal to $P_{D(max)}$. The maximum-power-dissipation limit is determined using Equation 16:

$$P_{D(max)} = \frac{125°C - T_A}{R_{\theta JA}} \quad (16)$$

where

- T_A is the maximum ambient temperature for the application.
- $R_{\theta JA}$ is the thermal resistance junction-to-ambient given in *Dissipation Ratings* .

The TPS61160A/61A comes in a thermally enhanced QFN package. This package includes a thermal pad that improves the thermal capabilities of the package. The $R_{\theta JA}$ of the QFN package greatly depends on the PCB layout and thermal pad connection. The thermal pad must be soldered to the analog ground on the PCB. Using thermal vias underneath the thermal pad as illustrated in the layout example. Also see the *QFN/SON PCB Attachment* application report (SLUA271).

Copyright © 2009–2016, Texas Instruments Incorporated

11 Device and Documentation Support

11.1 Device Support

11.1.1 Third-Party Products Disclaimer

TI'S PUBLICATION OF INFORMATION REGARDING THIRD-PARTY PRODUCTS OR SERVICES DOES NOT CONSTITUTE AN ENDORSEMENT REGARDING THE SUITABILITY OF SUCH PRODUCTS OR SERVICES OR A WARRANTY, REPRESENTATION OR ENDORSEMENT OF SUCH PRODUCTS OR SERVICES, EITHER ALONE OR IN COMBINATION WITH ANY TI PRODUCT OR SERVICE.

11.2 Documentation Support

11.2.1 Related Documentation

For related documentation, see the following application reports:

QFN/SON PCB Attachment (SLUA271).

How to Use Analog Dimming With the TPS6116x (SLVA471).

Design Tool for Analog Dimming Using a PWM Signal (http://www.ti.com/lit/zip/slvc366).

11.3 Related Links

Table 3 below lists quick access links. Categories include technical documents, support and community resources, tools and software, and quick access to sample or buy.

Table 3. Related Links

PARTS	PRODUCT FOLDER	SAMPLE & BUY	TECHNICAL DOCUMENTS	TOOLS & SOFTWARE	SUPPORT & COMMUNITY
TPS61160A	Click here	Click here	Click here	Click here	Click here
TPS61161A	Click here	Click here	Click here	Click here	Click here

11.4 Receiving Notification of Documentation Updates

To receive notification of documentation updates, navigate to the device product folder on ti.com. In the upper right corner, click on *Alert me* to register and receive a weekly digest of any product information that has changed. For change details, review the revision history included in any revised document.

11.5 Community Resources

The following links connect to TI community resources. Linked contents are provided "AS IS" by the respective contributors. They do not constitute TI specifications and do not necessarily reflect TI's views; see TI's Terms of Use.

TI E2E™ Online Community ***TI's Engineer-to-Engineer (E2E) Community.*** Created to foster collaboration among engineers. At e2e.ti.com, you can ask questions, share knowledge, explore ideas and help solve problems with fellow engineers.

Design Support ***TI's Design Support*** Quickly find helpful E2E forums along with design support tools and contact information for technical support.

11.6 Trademarks

E2E is a trademark of Texas Instruments.
All other trademarks are the property of their respective owners.

11.7 Electrostatic Discharge Caution



These devices have limited built-in ESD protection. The leads should be shorted together or the device placed in conductive foam during storage or handling to prevent electrostatic damage to the MOS gates.

Copyright © 2009–2016, Texas Instruments Incorporated

11.8 Glossary

SLYZ022 — *TI Glossary*.

This glossary lists and explains terms, acronyms, and definitions.

12 Mechanical, Packaging, and Orderable Information

The following pages include mechanical, packaging, and orderable information. This information is the most current data available for the designated devices. This data is subject to change without notice and revision of this document. For browser-based versions of this data sheet, refer to the left-hand navigation.

Copyright © 2009–2016, Texas Instruments Incorporated

PACKAGING INFORMATION

Orderable part number	Status (1)	Material type (2)	Package | Pins	Package qty | Carrier	RoHS (3)	Lead finish/ Ball material (4)	MSL rating/ Peak reflow (5)	Op temp (°C)	Part marking (6)
TPS61160ADRVR	Active	Production	WSON (DRV) | 6	3000 | LARGE T&R	Yes	NIPDAU	Level-2-260C-1 YEAR	-40 to 85	OBV
TPS61160ADRVR.B	Active	Production	WSON (DRV) | 6	3000 | LARGE T&R	Yes	NIPDAU	Level-2-260C-1 YEAR	-40 to 85	OBV
TPS61160ADRVRG4	Active	Production	WSON (DRV) | 6	3000 | LARGE T&R	Yes	NIPDAU	Level-2-260C-1 YEAR	-40 to 85	OBV
TPS61160ADRVRG4.B	Active	Production	WSON (DRV) | 6	3000 | LARGE T&R	Yes	NIPDAU	Level-2-260C-1 YEAR	-40 to 85	OBV
TPS61160ADRVT	Active	Production	WSON (DRV) | 6	250 | SMALL T&R	Yes	NIPDAU	Level-2-260C-1 YEAR	-40 to 85	OBV
TPS61160ADRVT.B	Active	Production	WSON (DRV) | 6	250 | SMALL T&R	Yes	NIPDAU	Level-2-260C-1 YEAR	-40 to 85	OBV
TPS61161ADRVR	Active	Production	WSON (DRV) | 6	3000 | LARGE T&R	Yes	NIPDAU | SN	Level-2-260C-1 YEAR	-40 to 85	OBT
TPS61161ADRVR.B	Active	Production	WSON (DRV) | 6	3000 | LARGE T&R	Yes	NIPDAU	Level-2-260C-1 YEAR	-40 to 85	OBT
TPS61161ADRVRG4	Active	Production	WSON (DRV) | 6	3000 | LARGE T&R	Yes	NIPDAU	Level-2-260C-1 YEAR	-40 to 85	OBT
TPS61161ADRVRG4.B	Active	Production	WSON (DRV) | 6	3000 | LARGE T&R	Yes	NIPDAU	Level-2-260C-1 YEAR	-40 to 85	OBT
TPS61161ADRVT	Active	Production	WSON (DRV) | 6	250 | SMALL T&R	Yes	NIPDAU | SN | NIPDAUAG	Level-2-260C-1 YEAR	-40 to 85	OBT
TPS61161ADRVT.B	Active	Production	WSON (DRV) | 6	250 | SMALL T&R	Yes	NIPDAU	Level-2-260C-1 YEAR	-40 to 85	OBT

(1) **Status:** For more details on status, see our product life cycle.

(2) **Material type:** When designated, preproduction parts are prototypes/experimental devices, and are not yet approved or released for full production. Testing and final process, including without limitation quality assurance, reliability performance testing, and/or process qualification, may not yet be complete, and this item is subject to further changes or possible discontinuation. If available for ordering, purchases will be subject to an additional waiver at checkout, and are intended for early internal evaluation purposes only. These items are sold without warranties of any kind.

(3) **RoHS values:** Yes, No, RoHS Exempt. See the TI RoHS Statement for additional information and value definition.

(4) **Lead finish/Ball material:** Parts may have multiple material finish options. Finish options are separated by a vertical ruled line. Lead finish/Ball material values may wrap to two lines if the finish value exceeds the maximum column width.

(5) **MSL rating/Peak reflow:** The moisture sensitivity level ratings and peak solder (reflow) temperatures. In the event that a part has multiple moisture sensitivity ratings, only the lowest level per JEDEC standards is shown. Refer to the shipping label for the actual reflow temperature that will be used to mount the part to the printed circuit board.

(6) **Part marking:** There may be an additional marking, which relates to the logo, the lot trace code information, or the environmental category of the part.

Multiple part markings will be inside parentheses. Only one part marking contained in parentheses and separated by a "~" will appear on a part. If a line is indented then it is a continuation of the previous line and the two combined represent the entire part marking for that device.

Important Information and Disclaimer: The information provided on this page represents TI's knowledge and belief as of the date that it is provided. TI bases its knowledge and belief on information provided by third parties, and makes no representation or warranty as to the accuracy of such information. Efforts are underway to better integrate information from third parties. TI has taken and continues to take reasonable steps to provide representative and accurate information but may not have conducted destructive testing or chemical analysis on incoming materials and chemicals. TI and TI suppliers consider certain information to be proprietary, and thus CAS numbers and other limited information may not be available for release.

In no event shall TI's liability arising out of such information exceed the total purchase price of the TI part(s) at issue in this document sold by TI to Customer on an annual basis.

TAPE AND REEL INFORMATION

REEL DIMENSIONS

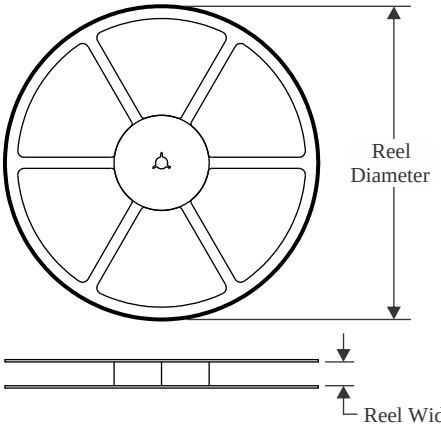

TAPE DIMENSIONS

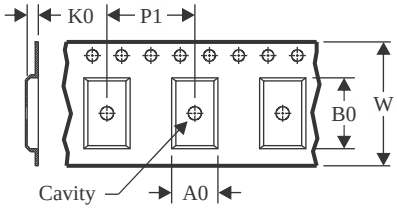

A0	Dimension designed to accommodate the component width
B0	Dimension designed to accommodate the component length
K0	Dimension designed to accommodate the component thickness
W	Overall width of the carrier tape
P1	Pitch between successive cavity centers

QUADRANT ASSIGNMENTS FOR PIN 1 ORIENTATION IN TAPE

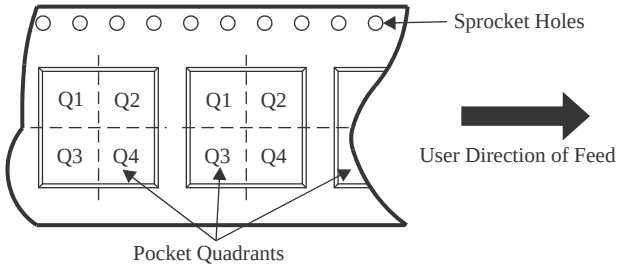

*All dimensions are nominal

Device	Package Type	Package Drawing	Pins	SPQ	Reel Diameter (mm)	Reel Width W1 (mm)	A0 (mm)	B0 (mm)	K0 (mm)	P1 (mm)	W (mm)	Pin1 Quadrant
TPS61160ADRVR	WSON	DRV	6	3000	180.0	8.4	2.3	2.3	1.15	4.0	8.0	Q2
TPS61160ADRVRG4	WSON	DRV	6	3000	180.0	8.4	2.3	2.3	1.15	4.0	8.0	Q2
TPS61160ADRVT	WSON	DRV	6	250	180.0	8.4	2.3	2.3	1.15	4.0	8.0	Q2
TPS61161ADRVR	WSON	DRV	6	3000	180.0	8.4	2.3	2.3	1.15	4.0	8.0	Q2
TPS61161ADRVR	WSON	DRV	6	3000	180.0	8.4	2.3	2.3	1.15	4.0	8.0	Q2
TPS61161ADRVR	WSON	DRV	6	3000	180.0	8.4	2.3	2.3	1.15	4.0	8.0	Q2
TPS61161ADRVRG4	WSON	DRV	6	3000	180.0	8.4	2.3	2.3	1.15	4.0	8.0	Q2
TPS61161ADRVT	WSON	DRV	6	250	180.0	8.4	2.3	2.3	1.15	4.0	8.0	Q2

TAPE AND REEL BOX DIMENSIONS

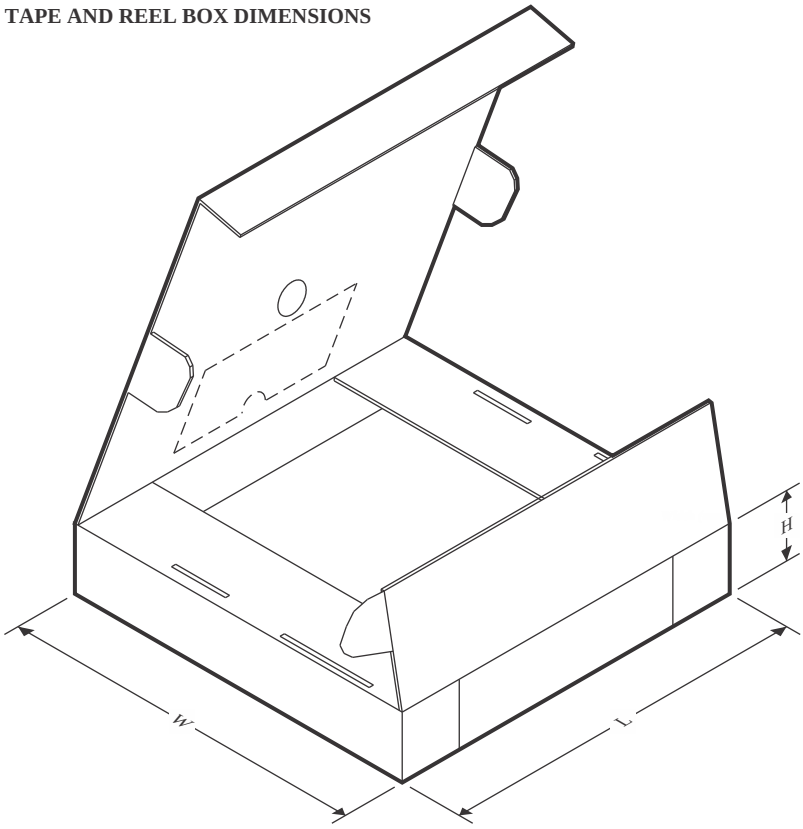

*All dimensions are nominal

Device	Package Type	Package Drawing	Pins	SPQ	Length (mm)	Width (mm)	Height (mm)
TPS61160ADRVR	WSON	DRV	6	3000	213.0	191.0	35.0
TPS61160ADRVRG4	WSON	DRV	6	3000	213.0	191.0	35.0
TPS61160ADRVT	WSON	DRV	6	250	213.0	191.0	35.0
TPS61161ADRVR	WSON	DRV	6	3000	210.0	185.0	35.0
TPS61161ADRVR	WSON	DRV	6	3000	213.0	191.0	35.0
TPS61161ADRVR	WSON	DRV	6	3000	210.0	185.0	35.0
TPS61161ADRVRG4	WSON	DRV	6	3000	210.0	185.0	35.0
TPS61161ADRVT	WSON	DRV	6	250	210.0	185.0	35.0

DRV 6 WSON - 0.8 mm max height

PLASTIC SMALL OUTLINE - NO LEAD

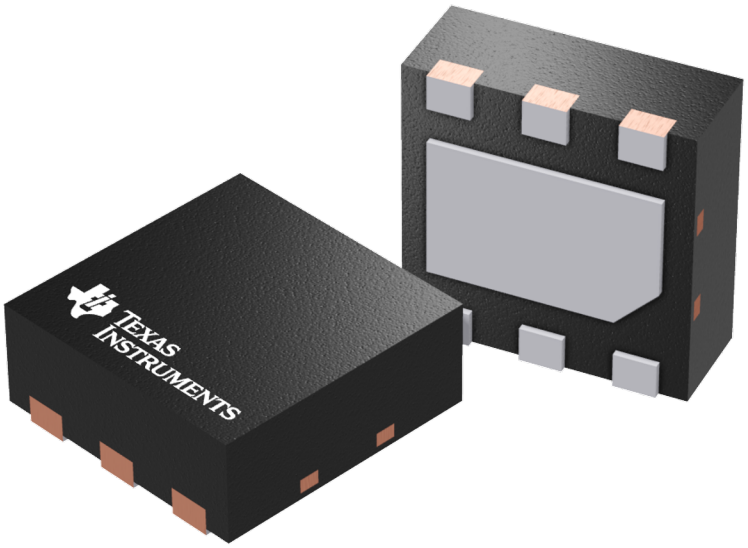

Images above are just a representation of the package family, actual package may vary.
Refer to the product data sheet for package details.

DRV0006D

PACKAGE OUTLINE

WSON - 0.8 mm max height

PLASTIC SMALL OUTLINE - NO LEAD

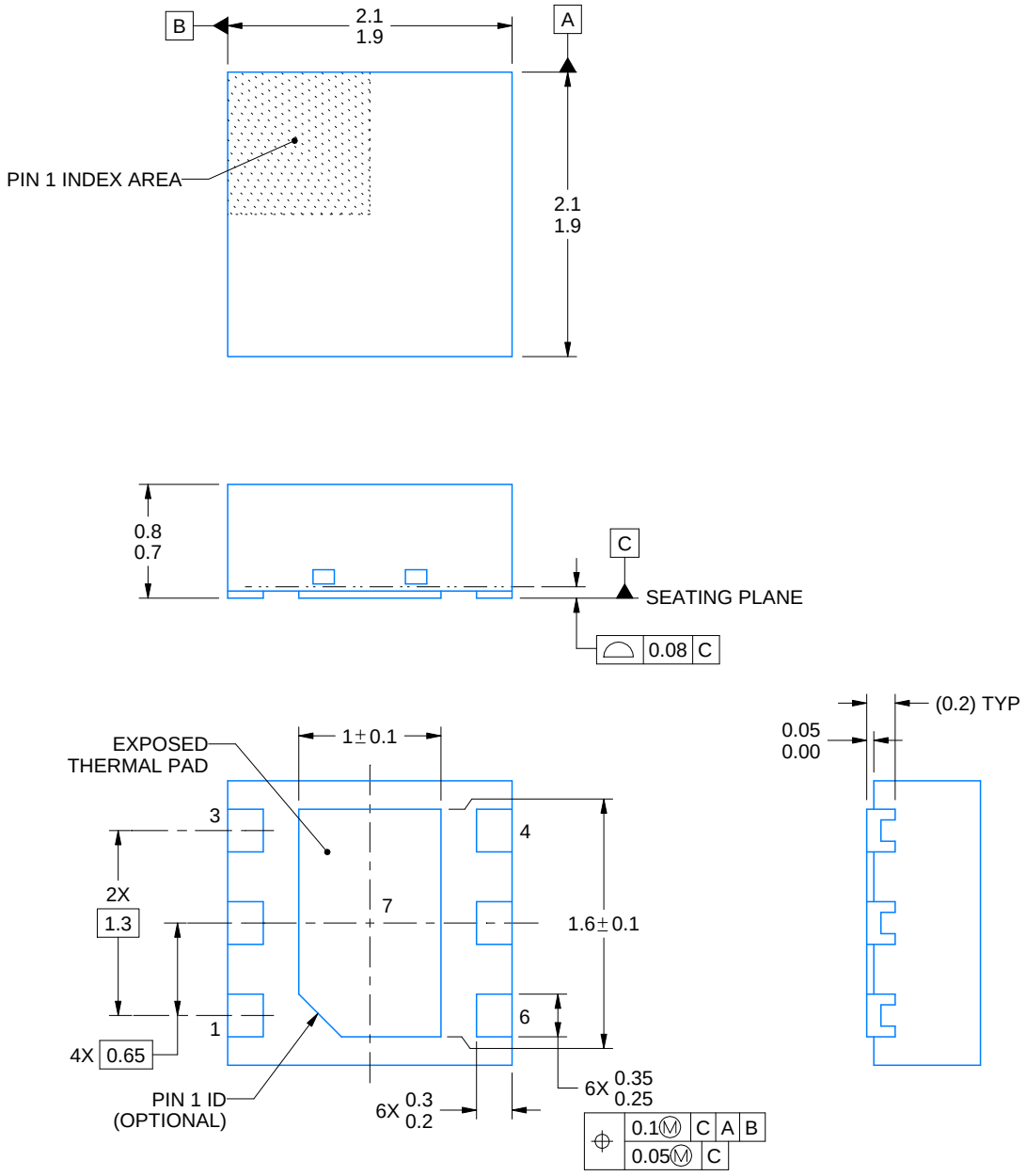

4225563/A 12/2019

NOTES:

1. All linear dimensions are in millimeters. Any dimensions in parenthesis are for reference only. Dimensioning and tolerancing per ASME Y14.5M.
2. This drawing is subject to change without notice.
3. The package thermal pad must be soldered to the printed circuit board for thermal and mechanical performance.

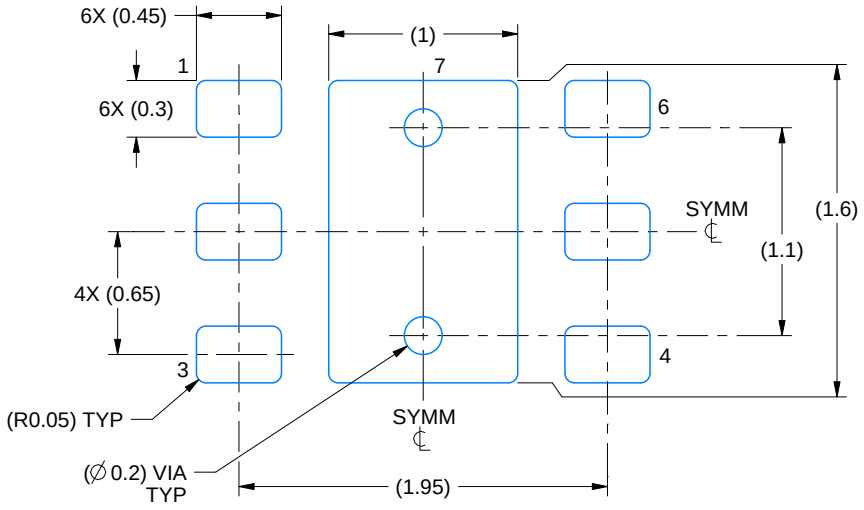

LAND PATTERN EXAMPLE
EXPOSED METAL SHOWN
SCALE:25X

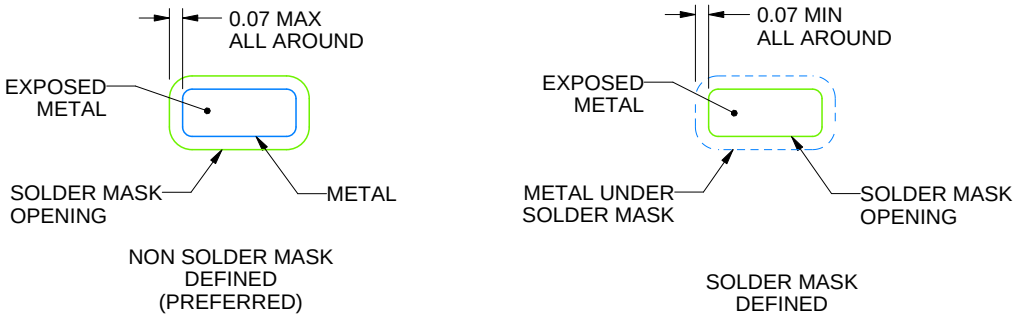

SOLDER MASK DETAILS

4225563/A 12/2019

NOTES: (continued)

4. This package is designed to be soldered to a thermal pad on the board. For more information, see Texas Instruments literature number SLUA271 (www.ti.com/lit/slua271).
5. Vias are optional depending on application, refer to device data sheet. If some or all are implemented, recommended via locations are shown.

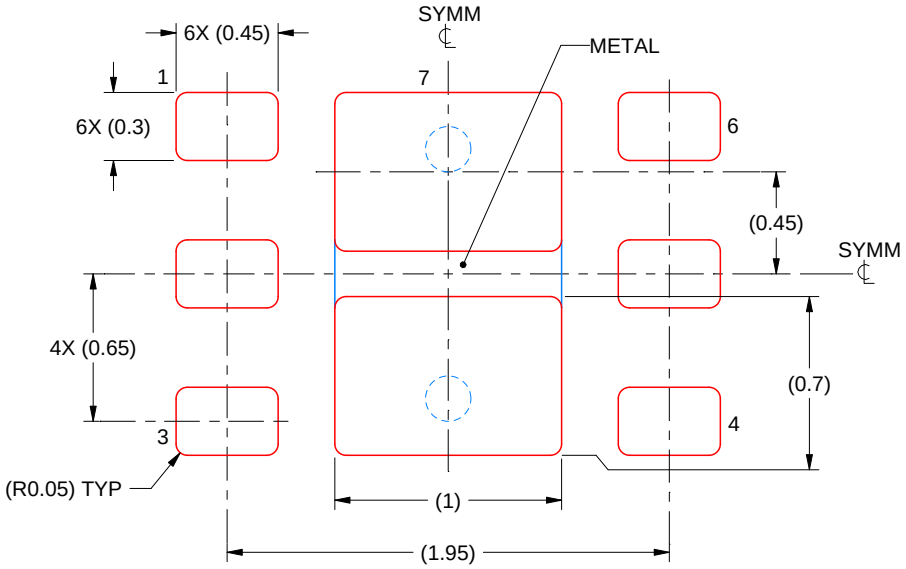

SOLDER PASTE EXAMPLE
BASED ON 0.125 mm THICK STENCIL

EXPOSED PAD #7
88% PRINTED SOLDER COVERAGE BY AREA UNDER PACKAGE
SCALE:30X

4225563/A 12/2019

NOTES: (continued)

6. Laser cutting apertures with trapezoidal walls and rounded corners may offer better paste release. IPC-7525 may have alternate design recommendations.

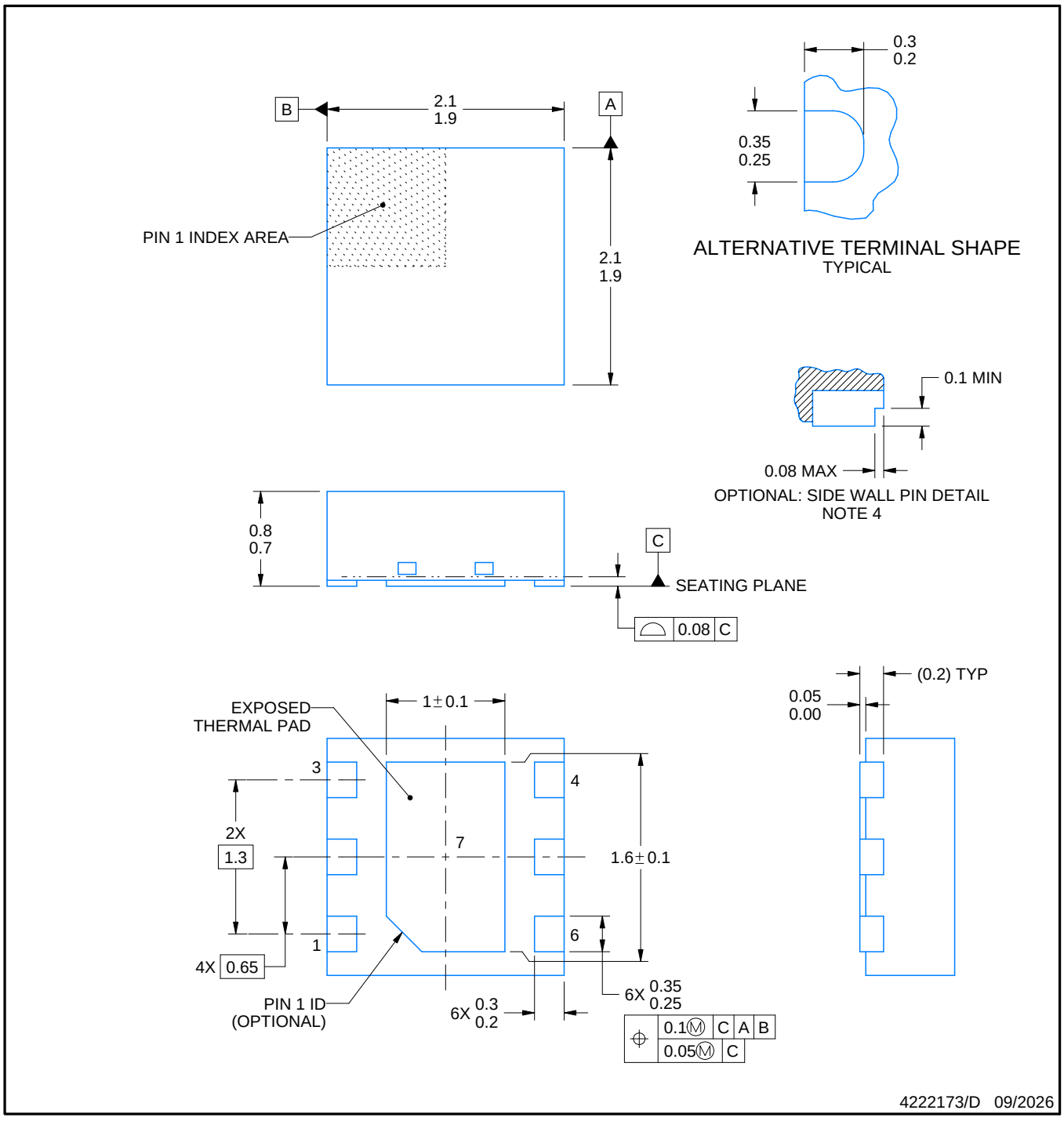

NOTES:

1. All linear dimensions are in millimeters. Any dimensions in parenthesis are for reference only. Dimensioning and tolerancing per ASME Y14.5M.
2. This drawing is subject to change without notice.
3. The package thermal pad must be soldered to the printed circuit board for thermal and mechanical performance.
4. Minimum 0.1 mm solder wetting on pin side wall. Available for wettable flank version only.

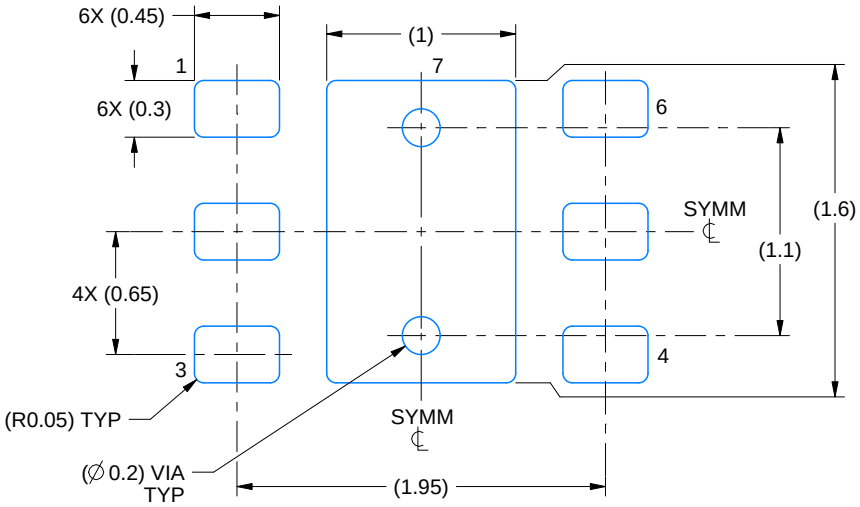

LAND PATTERN EXAMPLE
SCALE:25X

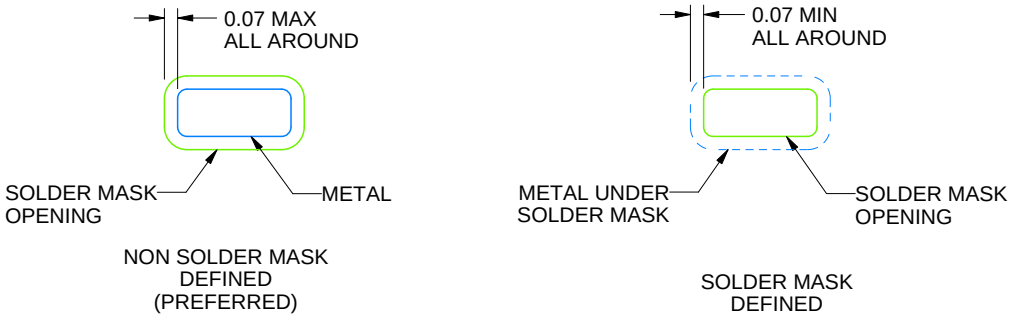

SOLDER MASK DETAILS

4222173/D 09/2026

NOTES: (continued)

5. This package is designed to be soldered to a thermal pad on the board. For more information, see Texas Instruments literature number SLUA271 (www.ti.com/lit/slua271).
6. Vias are optional depending on application, refer to device data sheet. If some or all are implemented, recommended via locations are shown.

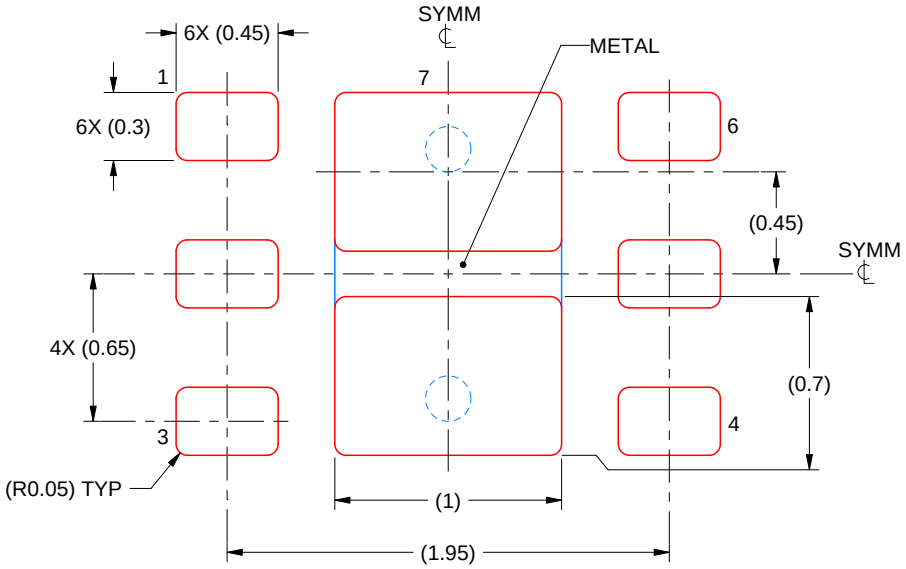

SOLDER PASTE EXAMPLE
BASED ON 0.125 mm THICK STENCIL

EXPOSED PAD #7
88% PRINTED SOLDER COVERAGE BY AREA UNDER PACKAGE
SCALE:30X

4222173/D 09/2026

NOTES: (continued)

7. Laser cutting apertures with trapezoidal walls and rounded corners may offer better paste release. IPC-7525 may have alternate design recommendations.

IMPORTANT NOTICE AND DISCLAIMER

TI PROVIDES TECHNICAL AND RELIABILITY DATA (INCLUDING DATASHEETS), DESIGN RESOURCES (INCLUDING REFERENCE DESIGNS), APPLICATION OR OTHER DESIGN ADVICE, WEB TOOLS, SAFETY INFORMATION, AND OTHER RESOURCES “AS IS” AND WITH ALL FAULTS, AND DISCLAIMS ALL WARRANTIES, EXPRESS AND IMPLIED, INCLUDING WITHOUT LIMITATION ANY IMPLIED WARRANTIES OF MERCHANTABILITY, FITNESS FOR A PARTICULAR PURPOSE OR NON-INFRINGEMENT OF THIRD PARTY INTELLECTUAL PROPERTY RIGHTS.

These resources are intended for skilled developers designing with TI products. You are solely responsible for (1) selecting the appropriate TI products for your application, (2) designing, validating and testing your application, and (3) ensuring your application meets applicable standards, and any other safety, security, regulatory or other requirements.

These resources are subject to change without notice. TI grants you permission to use these resources only for development of an application that uses the TI products described in the resource. Other reproduction and display of these resources is prohibited. No license is granted to any other TI intellectual property right or to any third party intellectual property right. TI disclaims responsibility for, and you fully indemnify TI and its representatives against any claims, damages, costs, losses, and liabilities arising out of your use of these resources.

TI’s products are provided subject to TI’s Terms of Sale, TI’s General Quality Guidelines, or other applicable terms available either on ti.com or provided in conjunction with such TI products. TI’s provision of these resources does not expand or otherwise alter TI’s applicable warranties or warranty disclaimers for TI products. Unless TI explicitly designates a product as custom or customer-specified, TI products are standard, catalog, general purpose devices.

TI objects to and rejects any additional or different terms you may propose.

Copyright © 2026, Texas Instruments Incorporated

Last updated 10/2025