TPS51200 Sink and Source DDR Termination Regulator

1 Features

- Input voltage: supports 2.5v rail and 3.3v rail
- VLDOIN voltage range: 1.1V to 3.5V
- Sink and source termination regulator includes droop compensation
- Requires minimum output capacitance of 20µF (Typically 3 × 10µF MLCCs) for memory termination applications (DDR)
- PGOOD to monitor output regulation
- EN Input
- REFIN input allows for flexible input tracking either directly or through resistor divider
- Remote sensing (VOSNS)
- ±10mA buffered reference (REFOUT)
- Built-in soft start, UVLO, and OCL
- Thermal shutdown
- Supports DDR, DDR2, DDR3, DDR3L, low-power DDR3, and DDR4 VTT applications
- 10-Pin VSON package with thermal pad

2 Applications

- Memory termination regulator for DDR, DDR2, DDR3, DDR3L, low-power DDR3 and DDR4
- Notebooks, desktops, and servers
- Telecom and datacom
- Base stations
- LCD-TVs and PDP-TVs
- Copiers and printers
- Set-top boxes

3 Description

The TPS51200 device is a sink and source double data rate (DDR) termination regulator specifically designed for low input voltage, low-cost, low-noise systems where space is a key consideration.

The TPS51200 maintains a fast transient response and requires a minimum output capacitance of only 20µF. The TPS51200 supports a remote sensing function and all power requirements for DDR, DDR2, DDR3, DDR3L, Low-Power DDR3 and DDR4 VTT bus termination.

In addition, the TPS51200 provides an open-drain PGOOD signal to monitor the output regulation and an EN signal that can be used to discharge VTT during S3 (suspend to RAM) for DDR applications.

The TPS51200 is available in the thermally efficient 10-pin VSON thermal pad package, and is rated both Green and Pb-free. It is specified from –40°C to +85°C.

Device Information

PART NUMBER	PACKAGE(1)	BODY SIZE (NOM)
TPS51200	VSON (10)	3.00mm × 3.00mm

(1) For all available packages, see the orderable addendum at the end of the data sheet.

Simplified DDR Application

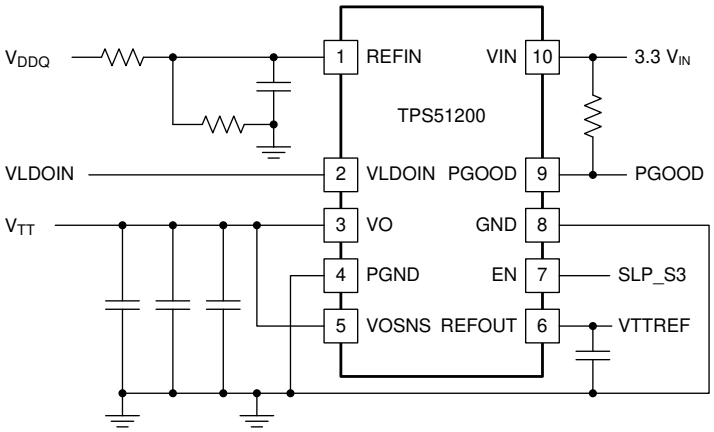

Copyright © 2016, Texas Instruments Incorporated

An IMPORTANT NOTICE at the end of this data sheet addresses availability, warranty, changes, use in safety-critical applications, intellectual property matters and other important disclaimers. PRODUCTION DATA.

Table of Contents

1 Features.....1
2 Applications.....1
3 Description.....1
4 Pin Configuration and Functions.....3
5 Specifications.....4
5.1 Absolute Maximum Ratings.....4
5.2 ESD Ratings.....4
5.3 Recommended Operating Conditions.....4
5.4 Thermal Information.....4
5.5 Electrical Characteristics.....5
5.6 Typical Characteristics.....7
6 Detailed Description.....10
6.1 Overview.....10
6.2 Functional Block Diagram.....10
6.3 Feature Description.....10
6.4 Device Functional Modes.....16
7 Application and Implementation.....17
7.1 Application Information.....17
7.2 Typical Application.....17
7.3 System Examples.....20
7.4 Power Supply Recommendations.....25
7.5 Layout.....26
8 Device and Documentation Support.....29
8.1 Device Support.....29
8.2 Documentation Support.....29
8.3 Receiving Notification of Documentation Updates.....29
8.4 Support Resources.....29
8.5 Trademarks.....29
8.6 Electrostatic Discharge Caution.....29
8.7 Glossary.....29
9 Revision History.....30
10 Mechanical, Packaging, and Orderable Information.....31

Copyright © 2025 Texas Instruments Incorporated

4 Pin Configuration and Functions

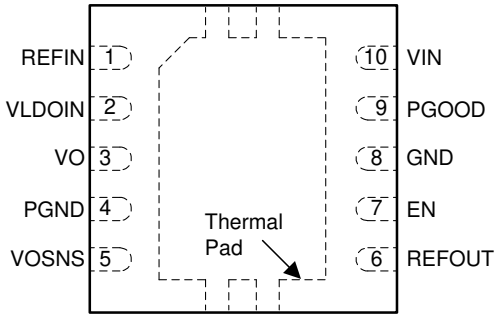

Figure 4-1. TPS51200 DRC Package, 10-Pin VSON (Top View)

Table 4-1. Pin Functions

PIN		I/O[2]	DESCRIPTION
NAME	NO.		
EN	7	I	For DDR VTT application, connect EN to SLP_S3. For any other application, use the EN pin as the ON/OFF function.
GND	8	G	Signal ground.
PGND[1]	4	G	Power ground for the LDO.
PGOOD	9	O	Open-drain, power-good indicator.
REFIN	1	I	Reference input.
REFOUT	6	O	Reference output. Connect to GND through 0.1µF ceramic capacitor. If there is a REFOUT capacitors at DDR side, keep total capacitance on REFOUT pin below 0.47µF. The REFOUT pin can not be open.
VIN	10	I	2.5V or 3.3V power supply. A ceramic decoupling capacitor with a value between 1µF and 4.7µF is required.
VLDOIN	2	I	Supply voltage for the LDO.
VO	3	O	Power output for the LDO.
VOSNS	5	I	Voltage sense input for the LDO. Connect to positive terminal of the output capacitor or the load.

(1) Thermal pad connection. See Figure 7-12 in the *Section 7.5.3* section for additional information.
(2) I = Input, O = Output , G = Ground

5 Specifications

5.1 Absolute Maximum Ratings

over operating free-air temperature range (unless otherwise noted) [1]

		MIN	MAX	UNIT
Input voltage[2]	REFIN, VIN, VLDOIN, VOSNS	–0.3	3.6	V
	EN	–0.3	6.5	
	PGND to GND	–0.3	0.3	
Output voltage[2]	REFOUT, VO	–0.3	3.6	V
	PGOOD	–0.3	6.5	
Operating junction temperature, T_J		–40	150	°C
Storage temperature, T_{stg}		–55	150	°C

(1) Stresses beyond those listed under *Absolute Maximum Ratings* may cause permanent damage to the device. These are stress ratings only, which do not imply functional operation of the device at these or any other conditions beyond those indicated under *Recommended Operating Conditions*. Exposure to absolute-maximum-rated conditions for extended periods may affect device reliability.
(2) All voltage values are with respect to the network ground terminal unless otherwise noted.

5.2 ESD Ratings

			VALUE	UNIT
$V_{(ESD)}$	Electrostatic discharge	Human-body model (HBM), per ANSI/ESDA/JEDEC JS-001[1]	±2000	V
		Charged-device model (CDM), per JEDEC specification JESD22C101[2]	±500	

(1) JEDEC document JEP155 states that 500V HBM allows safe manufacturing with a standard ESD control process.
(2) JEDEC document JEP157 states that 250V CDM allows safe manufacturing with a standard ESD control process.

5.3 Recommended Operating Conditions

over operating free-air temperature range (unless otherwise noted)

		MIN	NOM	MAX	UNIT
Supply voltages	VIN	2.375		3.500	V
Voltage	EN, VLDOIN, VOSNS	–0.1		3.5	V
	REFIN	0.5		1.8	
	PGOOD, VO	–0.1		3.5	
	REFOUT	–0.1		1.8	
	PGND	–0.1		0.1	
Operating free-air temperature, T_A		–40		85	°C

5.4 Thermal Information

THERMAL METRIC[1]		TPS51200 DRC (VSON) 10 PINS	UNIT
$R_{\theta JA}$	Junction-to-ambient thermal resistance	84.6	°C/W
$R_{\theta JC(top)}$	Junction-to-case (top) thermal resistance	55.6	°C/W
$R_{\theta JB}$	Junction-to-board thermal resistance	30.0	°C/W
ψ_{JT}	Junction-to-top characterization parameter	5.5	°C/W
ψ_{JB}	Junction-to-board characterization parameter	30.1	°C/W
$R_{\theta JC(bot)}$	Junction-to-case (bottom) thermal resistance	10.9	°C/W

(1) For more information about traditional and new thermal metrics, see the *Semiconductor and IC Package Thermal Metrics* application report, SPRA953.

Copyright © 2025 Texas Instruments Incorporated

5.5 Electrical Characteristics

Over recommended free-air temperature range, V_{VIN} = 3.3V, V_{VLDOIN} = 1.8V, V_{REFIN} = 0.9V, V_{VOSNS} = 0.9V, V_{EN} = V_{VIN}, C_{OUT} = 3 × 10µF and circuit shown in Figure 7-1. (unless otherwise noted)

PARAMETER		TEST CONDITIONS	MIN	TYP	MAX	UNIT
SUPPLY CURRENT						
I_{IN}	Supply current	T_A = 25°C, V_{EN} = 3.3V, No Load		0.7	1	mA
$I_{IN(SDN)}$	Shutdown current	T_A = 25°C, V_{EN} = 0V, V_{REFIN} = 0, No Load		65	80	µA
		T_A = 25°C, V_{EN} = 0V, V_{REFIN} > 0.4V, No Load		200	400	
I_{LDOIN}	Supply current of VLDOIN	T_A = 25°C, V_{EN} = 3.3V, No Load		1	50	µA
$I_{LDOIN(SDN)}$	Shutdown current of VLDOIN	T_A = 25°C, V_{EN} = 0V, No Load		0.1	50	µA
INPUT CURRENT						
I_{REFIN}	Input current, REFIN	V_{EN} = 3.3 V			1	µA
VO OUTPUT						
V_{VOSNS}	Output DC voltage, VO	V_{REFOUT} = 1.25V (DDR1), I_O = 0A		1.25		V
			–15		15	mV
		V_{REFOUT} = 0.9V (DDR2), I_O = 0A		0.9		V
			–15		15	mV
		V_{REFOUT} = 0.75V (DDR3), I_O = 0A		0.75		V
			–15		15	mV
		V_{REFOUT} = 0.675V (DDR3L), I_O = 0 A		0.675		V
			–15		15	mV
		V_{REFOUT} = 0.6V (DDR4), I_O = 0A		0.6		V
			–15		15	mV
V_{VOTOL}	Output voltage tolerance to REFOUT	–2A < I_{VO} < 2A	–25		25	mV
I_{VOSRCL}	VO source current Limit	With reference to REFOUT, V_{OSNS} = 90% × V_{REFOUT}	3		4.5	A
I_{VOSNCL}	VO sink current Limit	With reference to REFOUT, V_{OSNS} = 110% × V_{REFOUT}	3.5		5.5	A
I_{DSCHRG}	Discharge current, VO	V_{REFIN} = 0V, V_{VO} = 0.3V, V_{EN} = 0V, T_A = 25°C		18	25	Ω
POWERGOOD COMPARATOR						
$V_{TH(PG)}$	VO PGOOD threshold	PGOOD window lower threshold with respect to REFOUT	–23.5%	–20%	–17.5%	
		PGOOD window upper threshold with respect to REFOUT	17.5%	20%	23.5%	
		PGOOD hysteresis		5%		
$t_{PGSTUPDLY}$	PGOOD start-up delay	Start-up rising edge, VOSNS within 15% of REFOUT		2		ms
$V_{PGOODLOW}$	Output low voltage	I_{SINK} = 4 mA			0.4	V
$t_{PBADDLY}$	PGOOD bad delay	VOSNS is outside of the ±20% PGOOD window		10		µs
$I_{PGOODLK}$	Leakage current(1)	V_{OSNS} = V_{REFIN} (PGOOD high impedance), V_{PGOOD} = V_{VIN} + 0.2V			1	µA
REFIN AND REFOUT						
V_{REFIN}	REFIN voltage range		0.5		1.8	V
$V_{REFINUVLO}$	REFIN undervoltage lockout	REFIN rising	360	390	420	mV
$V_{REFINUVHYS}$	REFIN undervoltage lockout hysteresis			20		mV
V_{REFOUT}	REFOUT voltage			REFIN		V

5.5 Electrical Characteristics (continued)

Over recommended free-air temperature range, V_{VIN} = 3.3V, V_{VLDOIN} = 1.8V, V_{REFIN} = 0.9V, V_{VOSNS} = 0.9V, V_{EN} = V_{VIN}, C_{OUT} = 3 × 10µF and circuit shown in Figure 7-1. (unless otherwise noted)

PARAMETER		TEST CONDITIONS	MIN	TYP	MAX	UNIT
$V_{REFOUTTOL}$	REFOUT voltage tolerance to V_{REFIN}	–1mA < I_{REFOUT} < 1mA, V_{REFIN} = 1.25V	–12		12	mV
		–1mA < I_{REFOUT} < 1mA, V_{REFIN} = 0.9V	–12		12	
		–1mA < I_{REFOUT} < 1mA, V_{REFIN} = 0.75V	–12		12	
		–1mA < I_{REFOUT} < 1mA, V_{REFIN} = 0.675V	–12		12	
		–1mA < I_{REFOUT} < 1mA, V_{REFIN} = 0.6V	–12		12	
$I_{REFOUTSRCL}$	REFOUT source current limit	V_{REFOUT} = 0V	10	40		mA
$I_{REFOUTSNCL}$	REFOUT sink current limit	V_{REFOUT} = 0V	10	40		mA
UVLO AND EN LOGIC THRESHOLD						
$V_{VINUVVIN}$	UVLO threshold	Wake up, T_A = 25°C	2.2	2.3	2.375	V
		Hysteresis		50		mV
V_{ENIH}	High-level input voltage	Enable	1.7			V
V_{ENIL}	Low-level input voltage	Enable			0.3	
V_{ENYST}	Hysteresis voltage	Enable		0.5		
I_{ENLEAK}	Logic input leakage current	EN, T_A = 25°C	–1		1	µA
THERMAL SHUTDOWN						
T_{SON}	Thermal shutdown threshold(1)	Shutdown temperature		150		°C
		Hysteresis		25		

(1) Ensured by design. Not production tested.

Copyright © 2025 Texas Instruments Incorporated

5.6 Typical Characteristics

3 × 10µF MLCCs (0805) are used on the output

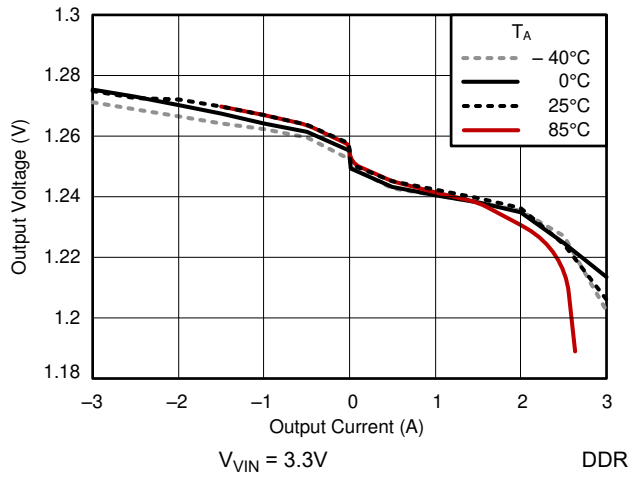

Figure 5-1. Load Regulation

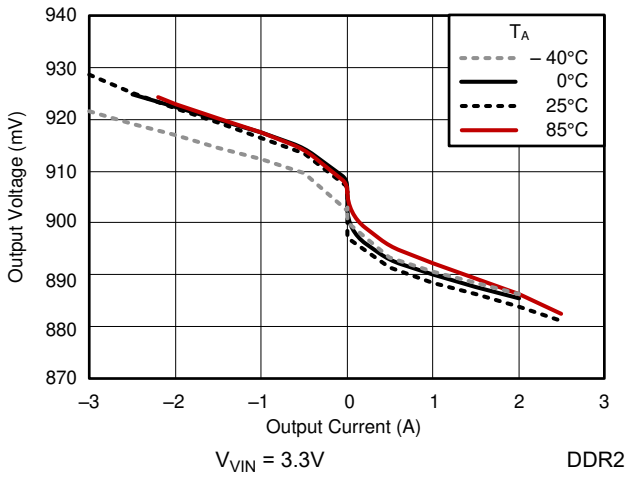

Figure 5-2. Load Regulation

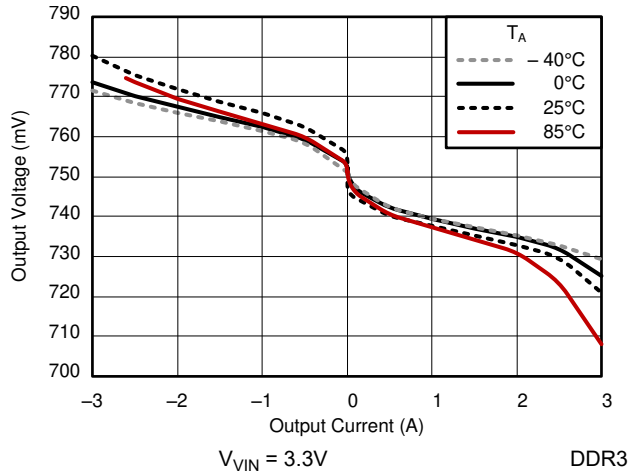

Figure 5-3. Load Regulation

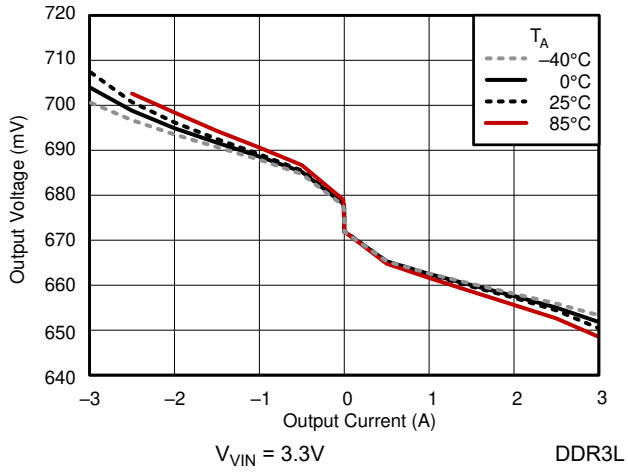

Figure 5-4. Load Regulation

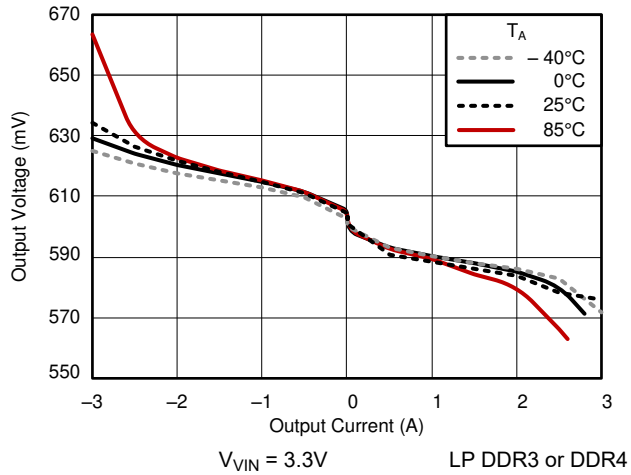

Figure 5-5. Load Regulation

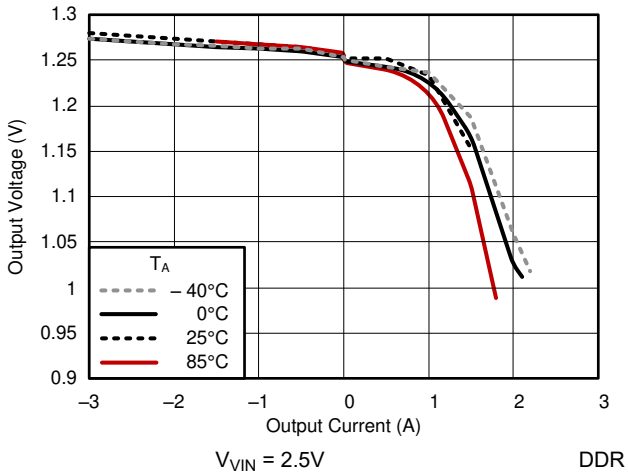

Figure 5-6. Load Regulation

5.6 Typical Characteristics (continued)

3 × 10µF MLCCs (0805) are used on the output

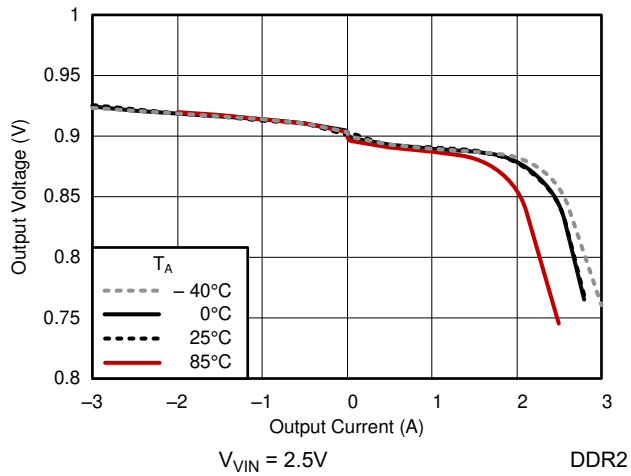

Figure 5-7. Load Regulation

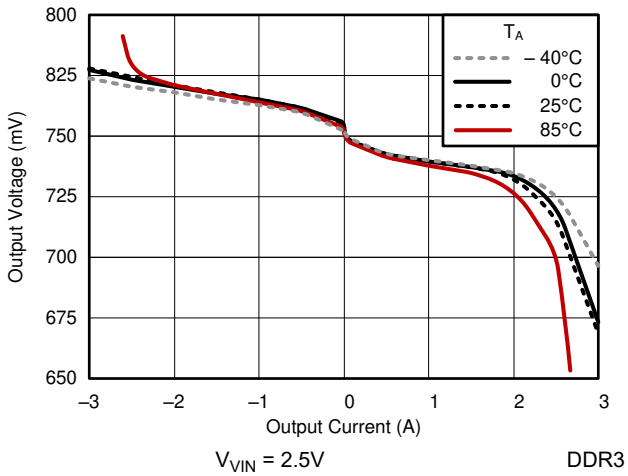

Figure 5-8. Load Regulation

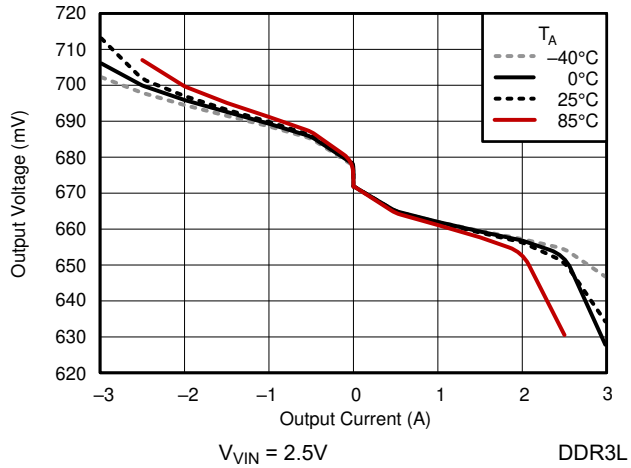

Figure 5-9. Load Regulation

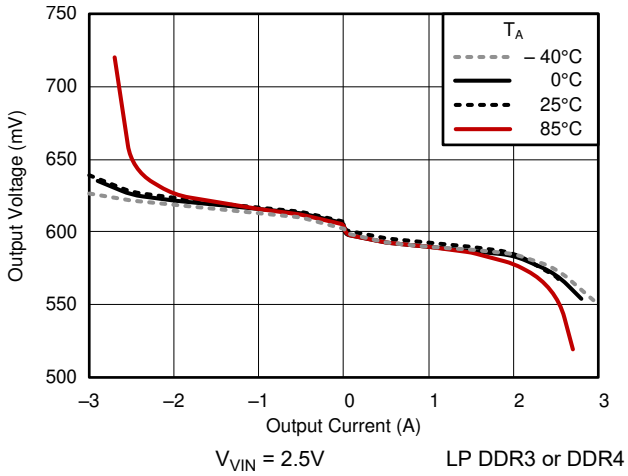

Figure 5-10. Load Regulation

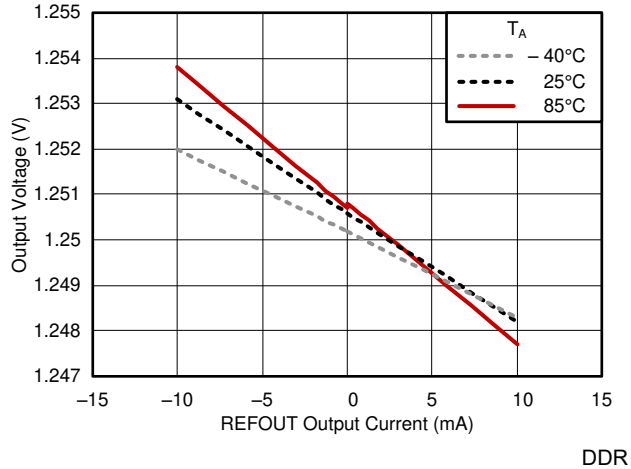

Figure 5-11. REFOUT Load Regulation

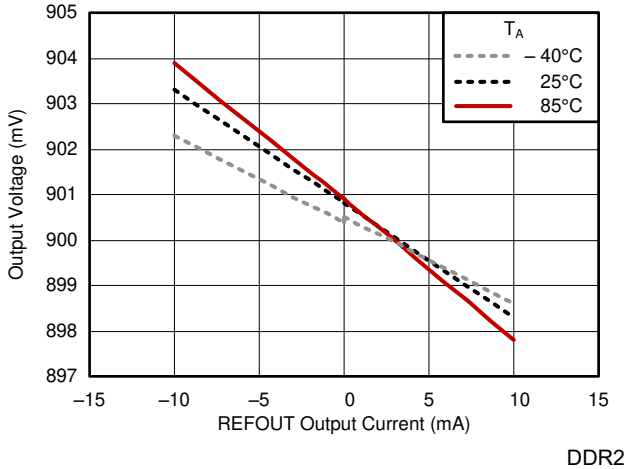

Figure 5-12. REFOUT Load Regulation

Copyright © 2025 Texas Instruments Incorporated

5.6 Typical Characteristics (continued)

3 × 10µF MLCCs (0805) are used on the output

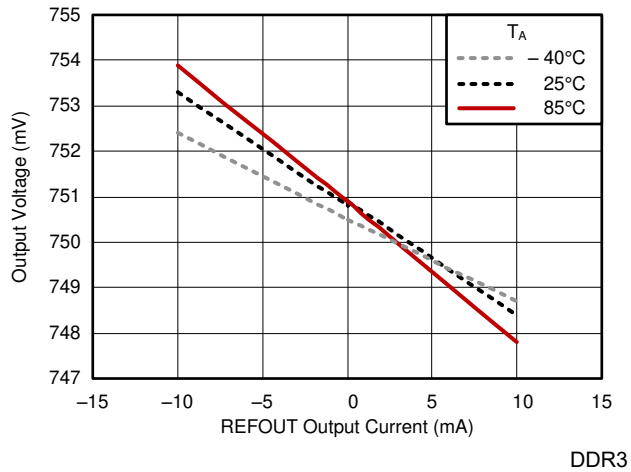

Figure 5-13. REFOUT Load Regulation

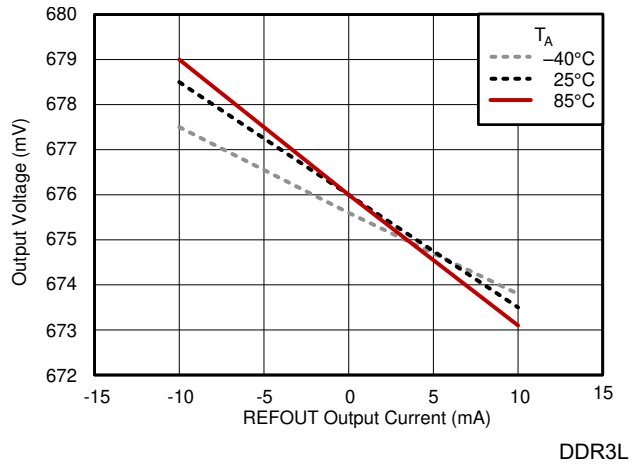

Figure 5-14. REFOUT Load Regulation

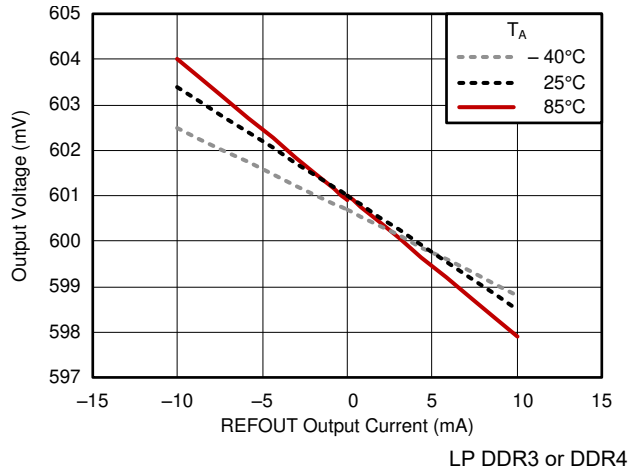

Figure 5-15. REFOUT Load Regulation

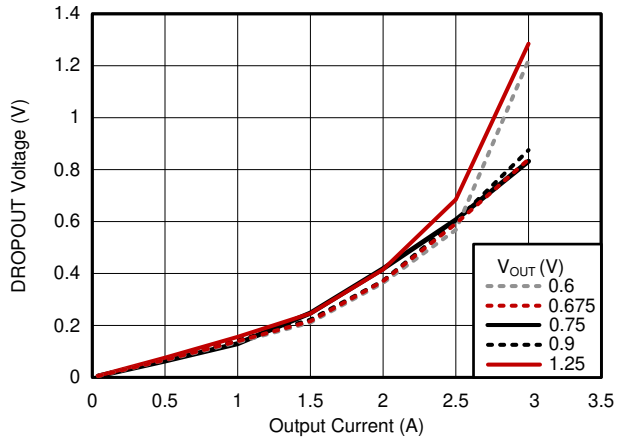

Figure 5-16. DROPOUT Voltage vs. Output Current

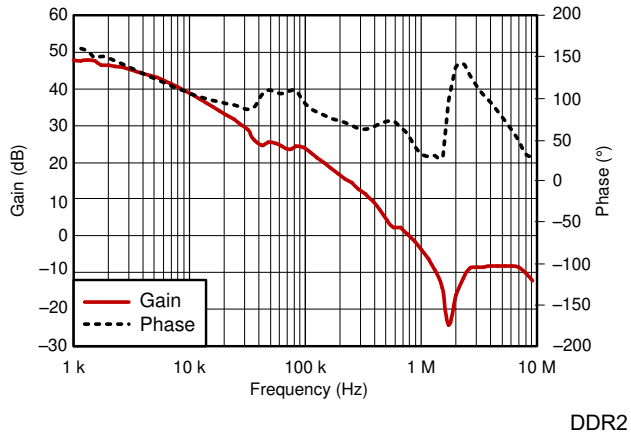

Figure 5-17. Bode Plot

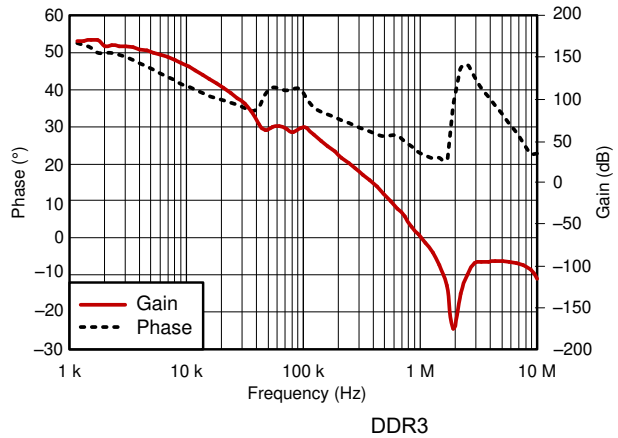

Figure 5-18. Bode Plot

6 Detailed Description

6.1 Overview

The TPS51200 device is a sink and source double data rate (DDR) termination regulator specifically designed for low input voltage, low-cost, low-noise systems where space is a key consideration.

The device maintains a fast transient response and only requires a minimum output capacitance of 20µF. The device supports a remote sensing function and all power requirements for DDR, DDR2, DDR3, DDR3L, Low Power DDR3, and DDR4 VTT bus termination.

6.2 Functional Block Diagram

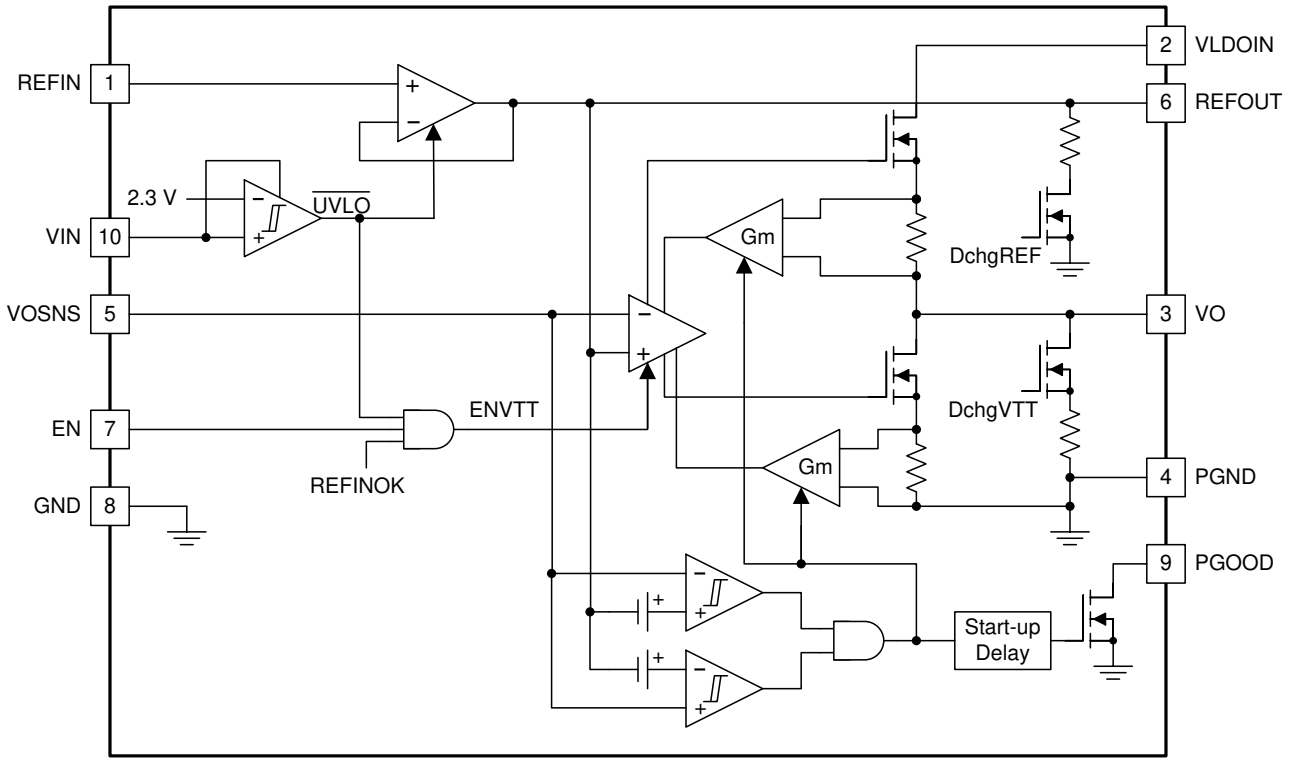

Copyright © 2016, Texas Instruments Incorporated

6.3 Feature Description

6.3.1 Sink and Source Regulator (VO Pin)

The TPS51200 is a sink and source tracking termination regulator specifically designed for low input voltage, low-cost, and low external component count systems where space is a key application parameter. The device integrates a high-performance, low-dropout (LDO) linear regulator that is capable of both sourcing and sinking current. The LDO regulator employs a fast feedback loop so that small ceramic capacitors can be used to support the fast load transient response. To achieve tight regulation with minimum effect of trace resistance, connect a remote sensing terminal, VOSNS, to the positive terminal of each output capacitor as a separate trace from the high current path from VO.

6.3.2 Reference Input (REFIN Pin)

The output voltage, VO, is regulated to REFOUT. When REFIN is configured for standard DDR termination applications, REFIN can be set by an external equivalent ratio voltage divider connected to the memory supply bus (VDDQ). The TPS51200 device supports REFIN voltages from 0.5V to 1.8V, making it versatile and ideal for many types of low-power LDO applications.

Copyright © 2025 Texas Instruments Incorporated

6.3.3 Reference Output (REFOUT Pin)

When it is configured for DDR termination applications, REFOUT generates the DDR VTT reference voltage for the memory application. It is capable of supporting both a sourcing and sinking load of 10mA. REFOUT becomes active when REFIN voltage rises to 0.390V and VIN is above the UVLO threshold. When REFOUT is less than 0.375V, it is disabled and subsequently discharges to GND through an internal 10kΩ MOSFET. REFOUT is independent of the EN pin state.

6.3.4 Soft-Start Sequencing

A current clamp implements the soft-start function of the VO pin. The current clamp allows the output capacitors to be charged with low and constant current, providing a linear ramp-up of the output voltage. When VO is outside of the powergood window, the current clamp level is one-half of the full overcurrent limit (OCL) level. When VO rises or falls within the PGOOD window, the current clamp level switches to the full OCL level. The soft-start function is completely symmetrical and the overcurrent limit works for both directions. The soft-start function works not only from GND to the REFOUT voltage, but also from VLDOIN to the REFOUT voltage.

6.3.5 Enable Control (EN Pin)

When EN is driven high, the VO regulator begins normal operation. When the device drives EN low, VO discharges to GND through an internal 18Ω MOSFET. REFOUT remains on when the device drives EN low. Ensure that the EN pin voltage remains lower than or equal to V_{VIN} at all times.

6.3.6 Powergood Function (PGOOD Pin)

The TPS51200 device provides an open-drain PGOOD output that goes high when the VO output is within ±20% of REFOUT. PGOOD de-asserts within 10µs after the output exceeds the size of the powergood window. During initial VO start-up, PGOOD asserts high 2ms (typ) after the VO enters power good window. Because PGOOD is an open-drain output, a pull-up resistor with a value between 1kΩ and 100kΩ, placed between PGOOD and a stable active supply voltage rail is required.

6.3.7 Current Protection (VO Pin)

The LDO has a constant overcurrent limit (OCL). The OCL level reduces by one-half when the output voltage is not within the powergood window. This reduction is a non-latch protection.

6.3.8 UVLO Protection (VIN Pin)

For VIN undervoltage lockout (UVLO) protection, the TPS51200 monitors VIN voltage. When the VIN voltage is lower than the UVLO threshold voltage, both the VO and REFOUT regulators are powered off. This shutdown is a non-latch protection.

6.3.9 Thermal Shutdown

The TPS51200 monitors junction temperature. If the device junction temperature exceeds the threshold value, (typically 150°C), the VO and REFOUT regulators both shut off, discharged by the internal discharge MOSFETs. This shutdown is a non-latch protection.

6.3.10 Tracking Start-up and Shutdown

The TPS51200 also supports tracking start-up and shutdown when the EN pin is tied directly to the system bus and not used to turn on or turn off the device. During tracking start-up, VO follows REFOUT once REFIN voltage is greater than 0.39V. REFIN follows the rise of VDDQ rail through a voltage divider. The typical soft-start time (t_{SS}) for the VDDQ rail is approximately 3ms, however it may vary depending on the system configuration. The soft-start time of the VO output no longer depends on the OCL setting, but it is a function of the soft-start time of the VDDQ rail. PGOOD is asserted 2ms after V_{VO} is within ±20% of REFOUT. During tracking shutdown, the VO pin voltage falls following REFOUT until REFOUT reaches 0.37V. When REFOUT falls below 0.37V, the internal discharge MOSFETs turn on and quickly discharge both REFOUT and VO to GND. PGOOD is deasserted when VO is beyond the ±20% range of REFOUT. Figure 6-2 shows the typical timing diagram for an application that uses tracking start-up and shutdown.

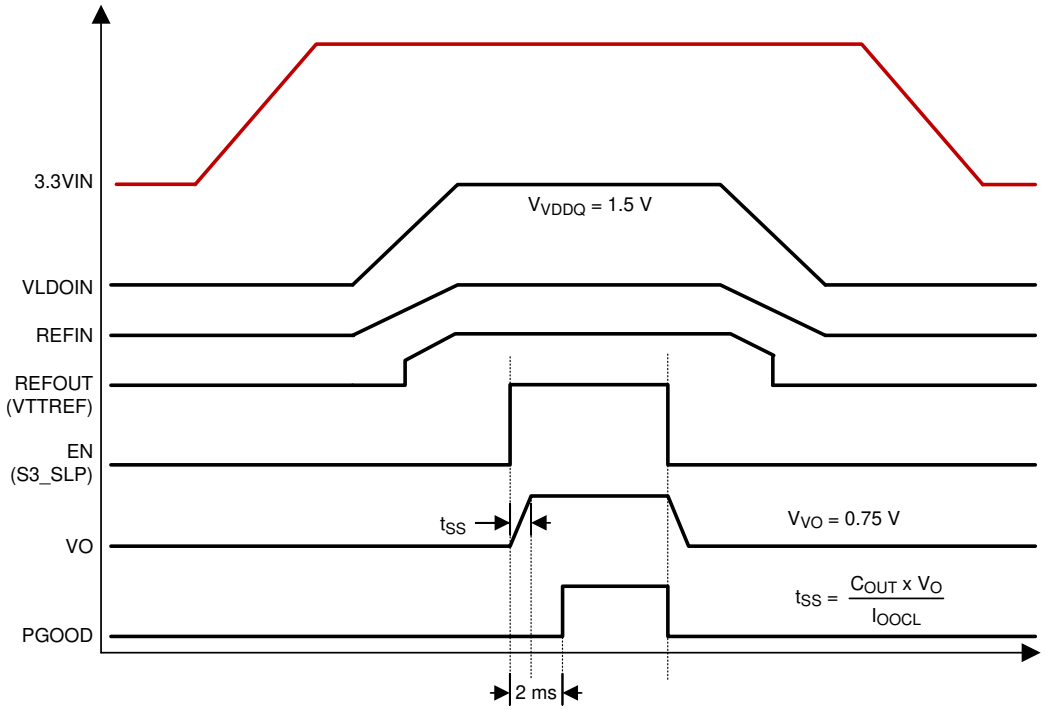

Figure 6-1. Typical Timing Diagram for S3 and Pseudo-S5 Support

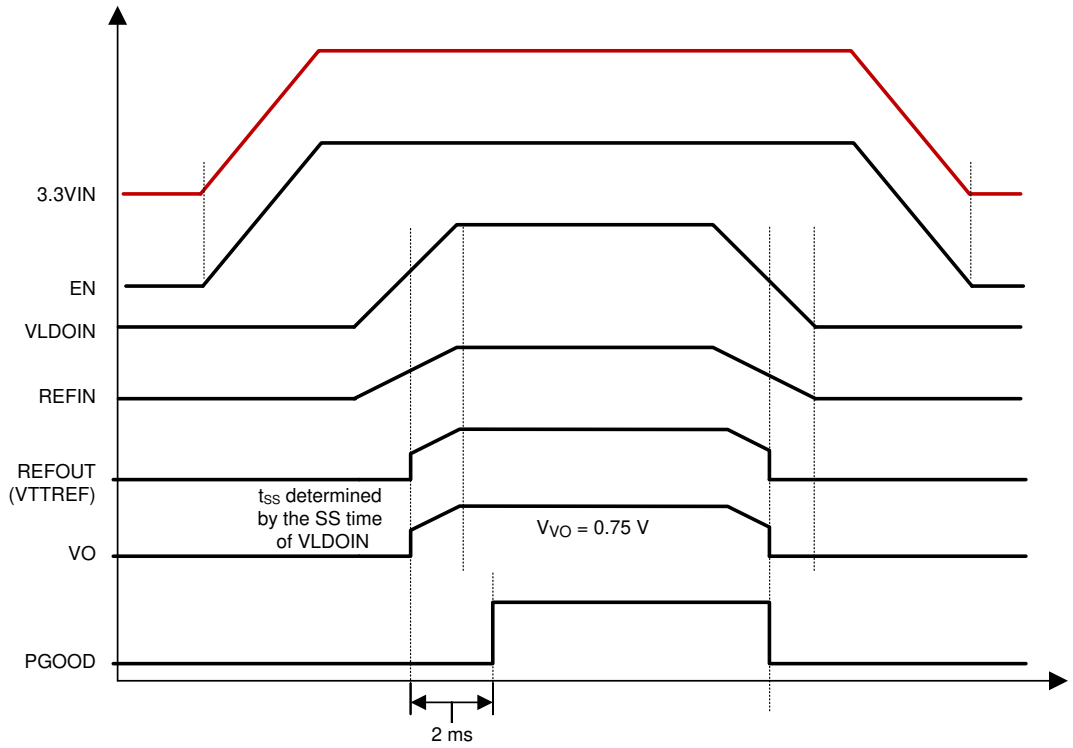

Figure 6-2. Typical Timing Diagram of Tracking Start-up and Shutdown

Copyright © 2025 Texas Instruments Incorporated

6.3.11 Output Tolerance Consideration for VTT DIMM Applications

The TPS51200 is specifically designed to power up the memory termination rail (as shown in Figure 6-3). The DDR memory termination structure determines the main characteristics of the VTT rail, which is to be able to sink and source current while maintaining acceptable VTT tolerance. See Figure 6-4 for typical characteristics for a single memory cell.

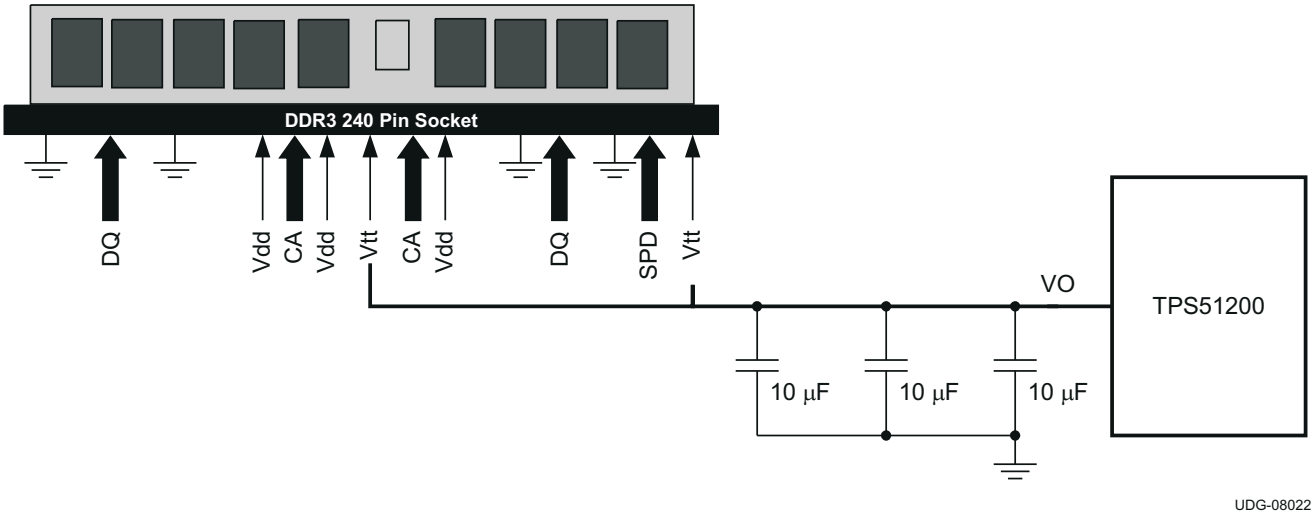

Figure 6-3. Typical Application Diagram for DDR3 VTT DIMM using TPS51200

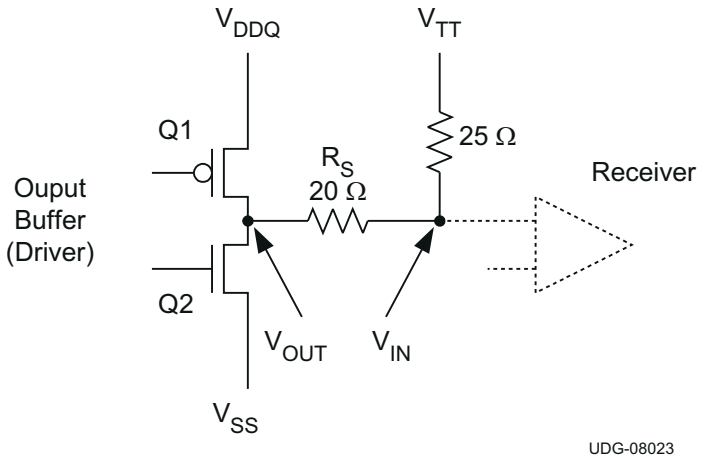

Figure 6-4. DDR Physical Signal System Bi-Directional SSTL Signaling

In Figure 6-4, when Q1 is on and Q2 is off:

- Current flows from VDDQ via the termination resistor to VTT
- VTT sinks current

In Figure 6-4, when Q2 is on and Q1 is off:

- Current flows from VTT via the termination resistor to GND
- VTT sources current

Because VTT accuracy has a direct impact on the memory signal integrity, it is imperative to understand the tolerance requirement on VTT. Equation 1 applies to both DC and AC conditions and is based on JEDEC VTT specifications for DDR and DDR2 (JEDEC standard: DDR JESD8-9B May 2002; DDR2 JESD8-15A Sept 2003).

Copyright © 2025 Texas Instruments Incorporated

$$V_{VTTREF} - 40mV < V_{VTT} < V_{VTTREF} + 40mV \quad (1)$$

The specification itself indicates that VTT must keep track of VTTREF for proper signal conditioning.

The TPS51200 ensures the regulator output voltage to be as shown in Equation 2, which applies to both DC and AC conditions.

$$V_{VTTREF} - 25mV < V_{VTT} < V_{VTTREF} + 25mV \quad (2)$$

where

- $-2A < I_{VTT} < 2A$

The regulator output voltage is measured at the regulator side, not the load side. The tolerance is applicable to DDR, DDR2, DDR3, DDR3L, Low Power DDR3, and DDR4 applications (see Table 6-1 for detailed information). To meet the stability requirement, a minimum output capacitance of 20µF is needed. Considering the actual tolerance on the MLCC capacitors, three 10µF ceramic capacitors sufficiently meet the VTT accuracy requirement.

Table 6-1. DDR, DDR2, DDR3 and LP DDR3 Termination Technology

	DDR	DDR2	DR3	LOW POWER DDR3
FSB Data Rates	200, 266, 333, and 400MHz	400, 533, 677, and 800MHz	800, 1066, 1330, and 1600MHz	
Termination	Motherboard termination to VTT for all signals	On-die termination for data group. VTT termination for address, command and control signals	On-die termination for data group. VTT termination for address, command and control signals	
Termination Current Demand	Maximum source/sink transient currents of up to 2.6A to 2.9A	Not as demanding	Not as demanding	
		Only 34 signals (address, command, control) tied to VTT	Only 34 signals (address, command, control) tied to VTT	
		ODT handles data signals	ODT handles data signals	
		Less than 1A of burst current	Less than 1A of burst current	
Voltage Level	2.5V Core and I/O 1.25V VTT	1.8V Core and I/O 0.9V VTT	1.5V Core and I/O 0.75V VTT	1.2V Core and I/O 0.6V VTT

The TPS51200 uses transconductance (g_M) to drive the LDO. The transconductance and output current of the device determine the voltage droop between the reference input and the output regulator. The typical transconductance level is 250S at 2A and changes with respect to the load in order to conserve the quiescent current (that is, the transconductance is very low at no load condition). The (g_M) LDO regulator is a single pole system. Only the output capacitance determines the unity gain bandwidth for the voltage loop, as a result of the bandwidth nature of the transconductance (see Equation 3).

$$f_{UGBW} = \frac{g_M}{2 \times \pi \times C_{OUT}} \quad (3)$$

where

- f_{UGBW} is the unity gain bandwidth
- g_M is transconductance
- C_{OUT} is the output capacitance

Consider these two limitations to this type of regulator that come from the output bulk capacitor requirement. In order to maintain stability, the zero location contributed by the ESR of the output capacitors must be greater than the –3dB point of the current loop. This constraint means that higher ESR capacitors should not be used in the design. In addition, the impedance characteristics of the ceramic capacitor should be well understood in order

Copyright © 2025 Texas Instruments Incorporated

to prevent the gain peaking effect around the transconductance (g_M) –3dB point because of the large ESL, the output capacitor and parasitic inductance of the VO pin voltage trace.

6.3.12 REFOUT (V_{REF}) Consideration for DDR2 Applications

During TPS51200 tracking start-up, the REFIN voltage follows the rise of the VDDQ rail through a voltage divider, and REFOUT (V_{REF}) follows REFIN once the REFIN voltage is greater than 0.39V. When the REFIN voltage is lower than 0.39V, V_{REF} is 0V.

The JEDEC *DDR2 SDRAM Standard* (JESD79-2E) states that V_{REF} must track VDDQ/2 within ±0.3V accuracy during the start-up period. To allow the TPS51200

device to meet the JEDEC DDR2 specification, a resistor divider can be used to provide the V_{REF} signal to the DIMM. The resistor divider ratio is 0.5 to ensure that the V_{REF} voltage equals VDDQ/2.

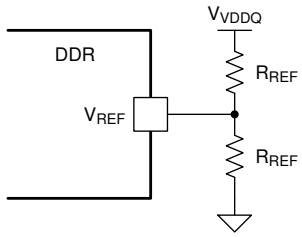

Figure 6-5. Resistor Divider Circuit

When selecting the resistor value, consider the impact of the leakage current from the DIMM V_{REF} pin on the reference voltage. Use Equation 4 to calculate resistor values.

$$R_{REF} \leq \frac{2 \times \Delta V_{REF}}{I_{REF}} \tag{4}$$

where

- R_{REF} is the resistor value
- ΔV_{REF} is the V_{REF} DC variation requirement
- I_{REF} is the maximum total V_{REF} leakage current from DIMMs

Consider the MT47H64M16 DDR2 SDRAM component from Micron as an example. The MT47H64M16 datasheet shows the maximum V_{REF} leakage current of each DIMM is ±2µA, and $V_{REF(DC)}$ variation must be within ±1% of VDDQ. In this DDR2 application, the VDDQ voltage is 1.8V. Assuming one TPS51200 device needs to power 4 DIMMs, the maximum total V_{REF} leakage current is ±8µA. Based on the calculations, the resistor value should be lower than 4.5kΩ. To ensure sufficient margin, 100Ω is the suggested resistor value. With two 100Ω resistors, the maximum V_{REF} variation is 0.4mV, and the power loss on each resistor is 8.1mW.

Copyright © 2025 Texas Instruments Incorporated

6.4 Device Functional Modes

6.4.1 Low Input Voltage Applications

TPS51200 can be used in an application system that offers either a 2.5V rail or a 3.3V rail. If only a 5V rail is available, consider using the TPS51100 device as an alternative. The TPS51200 device has a minimum input voltage requirement of 2.375V. If a 2.5V rail is used, ensure that the absolute minimum voltage (both DC and transient) at the device pin is be 2.375V or greater. The voltage tolerance for a 2.5V rail input is between –5% and 5% accuracy, or better.

6.4.2 S3 and Pseudo-S5 Support

The TPS51200 provides S3 support by an EN function. The EN pin could be connected to an SLP_S3 signal in the end application. Both REFOUT and VO are on when EN = high (S0 state). REFOUT is maintained while VO is turned off and discharged via an internal discharge MOSFET when EN = low (S3 state). When EN = low and the REFIN voltage is less than 0.390V, TPS51200 enters pseudo-S5 state. Both VO and REFOUT outputs are turned off and discharged to GND through internal MOSFETs when pseudo-S5 support is engaged (S4 or S5 state). Figure 6-1 shows a typical start-up and shutdown timing diagram for an application that uses S3 and pseudo-S5 support.

Copyright © 2025 Texas Instruments Incorporated

7 Application and Implementation

Note

Information in the following applications sections is not part of the TI component specification, and TI does not warrant its accuracy or completeness. TI's customers are responsible for determining suitability of components for their purposes, as well as validating and testing their design implementation to confirm system functionality.

7.1 Application Information

7.2 Typical Application

This design example describes a 3.3V_{IN}, DDR3 configuration.

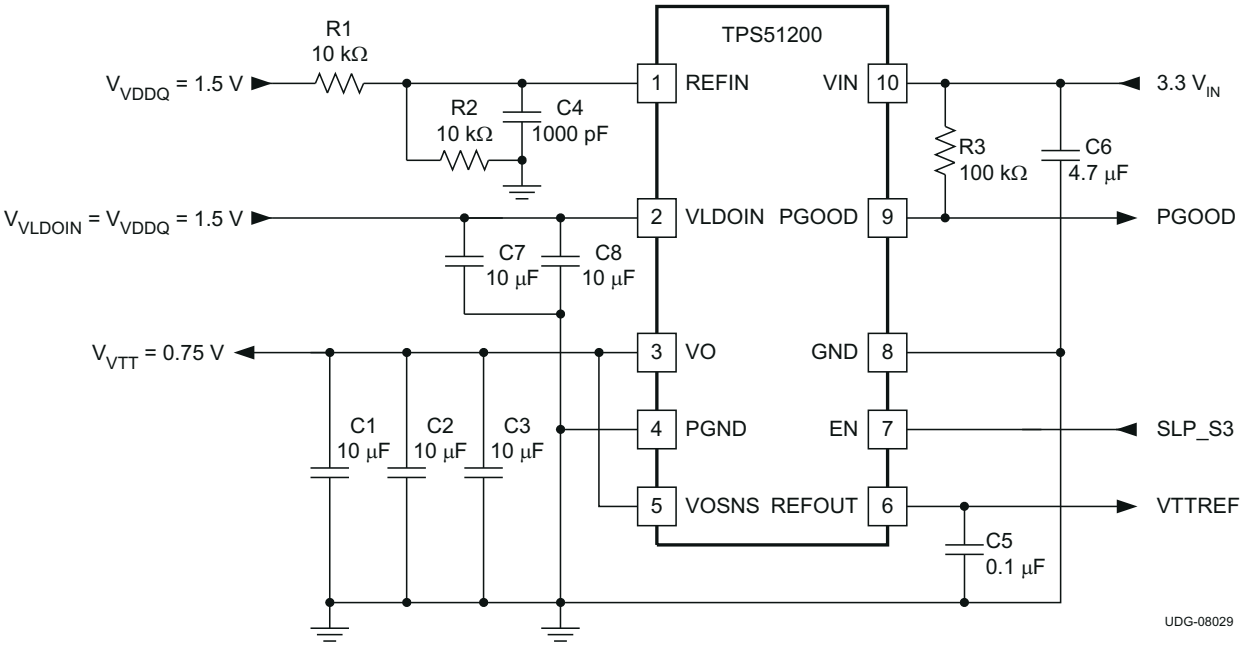

Figure 7-1. 3.3V_{IN}, DDR3 Configuration

Table 7-1. 3.3V_{IN}, DDR3 Application List of Materials

REFERENCE DESIGNATOR	DESCRIPTION	SPECIFICATION	PART NUMBER	MANUFACTURER
R1, R2	Resistor	10kΩ		
R3		100kΩ		
C1, C2, C3	Capacitor	10µF, 6.3V	GRM21BR70J106KE76L	Murata
C4		1000pF		
C5		0.1µF		
C6		4.7µF, 6.3V	GRM21BR60J475KA11L	Murata
C7, C8		10µF, 6.3V	GRM21BR70J106KE76L	Murata

7.2.1 Design Requirements

- V_{IN} = 3.3V
- V_{DDDQ} = 1.5V
- V_{VLDOIN} = V_{VDDQ} = 1.5V
- V_{VTT} = 0.75V

7.2.2 Detailed Design Procedure

7.2.2.1 Input Voltage Capacitor

Add a ceramic capacitor, with a value between 1.0µF and 4.7µF, placed close to the VIN pin, to stabilize the bias supply (2.5V rail or 3.3V rail) from any parasitic impedance from the supply.

7.2.2.2 VLDO Input Capacitor

Depending on the trace impedance between the VLDOIN bulk power supply to the device, a transient increase of source current is supplied mostly by the charge from the VLDOIN input capacitor. Use a 10µF (or greater) ceramic capacitor to supply this transient charge. Provide more input capacitance as more output capacitance is used at the VO pin. In general, use one-half of the C_{OUT} value for input.

7.2.2.3 Output Capacitor

For stable operation, the total capacitance of the VO output pin must be greater than 20µF. Attach three, 10µF ceramic capacitors in parallel to minimize the effect of equivalent series resistance (ESR) and equivalent series inductance (ESL). If the ESR is greater than 2mΩ, insert an RC filter between the output and the VOSNS input to achieve loop stability. The RC filter time constant should be almost the same as or slightly lower than the time constant of the output capacitor and its ESR.

Copyright © 2025 Texas Instruments Incorporated

7.2.3 Application Curves

Figure 7-2 shows the bode plot simulation for this DDR3 design example of the TPS51200 device.

The unity-gain bandwidth is approximately 1MHz and the phase margin is 52°. The 0dB level is crossed, the gain peaks because of the ESL effect. However, the peaking maintains a level well below 0 dB.

Figure 7-3 shows the load regulation and Figure 7-4 shows the transient response for a typical DDR3 configuration. When the regulator is subjected to ±1.5A load step and release, the output voltage measurement shows no difference between the dc and ac conditions.

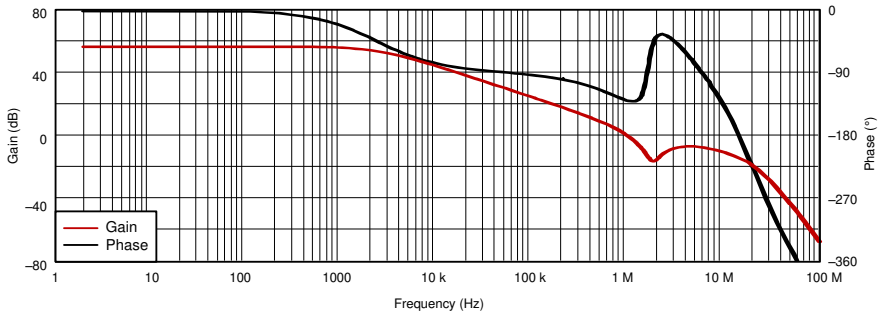

V_{IN} = 3.3 V
I_{IO} = 2A

V_{VLDOIN} = 1.5 V
3 × 10µF capacitors

V_{VO} = 0.75 V
ESR = 2.5mΩ
ESL = 800pH

Figure 7-2. DDR3 Design Example Bode Plot

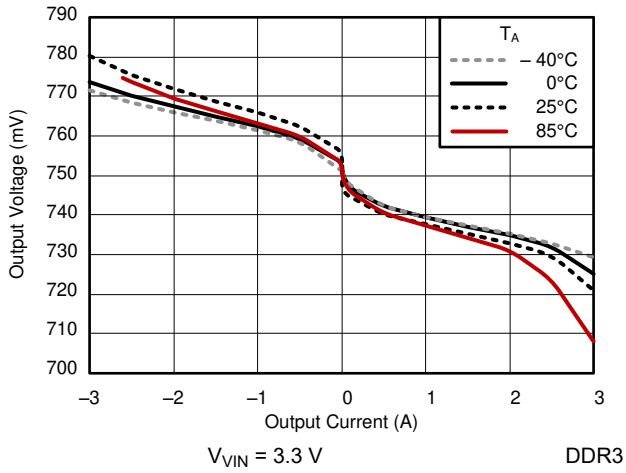

V_{VIN} = 3.3 V

DDR3

Figure 7-3. Load Regulation

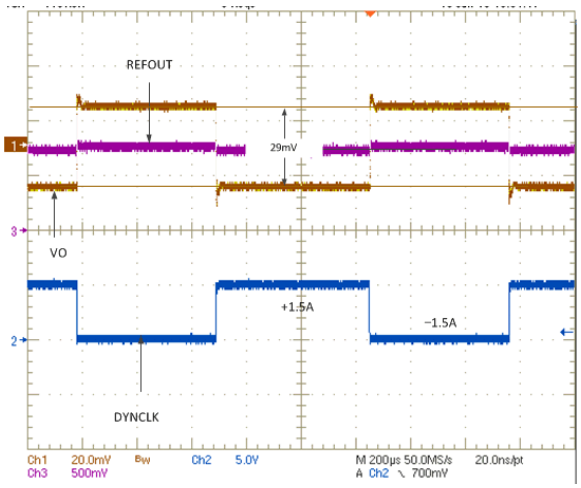

Figure 7-4. Transient Waveform

7.3 System Examples

7.3.1 3.3V_{IN}, DDR2 Configuration

This section describes a 3.3V_{IN}, DDR2 configuration application.

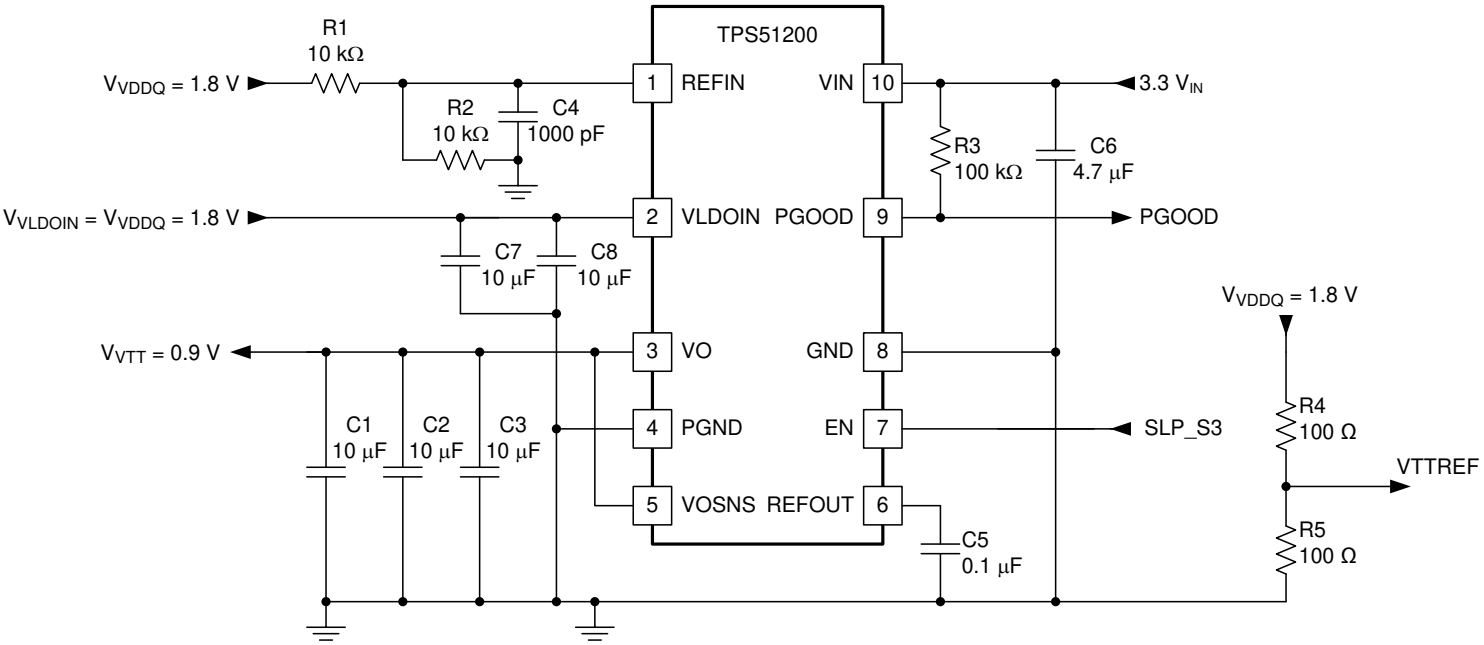

Figure 7-5. 3.3V_{IN}, DDR2 Configuration

Table 7-2. 3.3V_{IN}, DDR2 Configuration List of Materials

REFERENCE DESIGNATOR	DESCRIPTION	SPECIFICATION	PART NUMBER	MANUFACTURER
R1, R2	Resistor	10kΩ		
R3		100kΩ		
R4, R5		100Ω		
C1, C2, C3	Capacitor	10µF, 6.3V	GRM21BR70J106KE76L	Murata
C4		1000pF		
C5		0.1µF		
C6		4.7µF, 6.3V	GRM21BR60J475KA11L	Murata
C7, C8		10µF, 6.3V	GRM21BR70J106KE76L	Murata

Copyright © 2025 Texas Instruments Incorporated

7.3.2 2.5V_{IN}, DDR3 Configuration

This design example describes a 2.5V_{IN}, DDR3 configuration application.

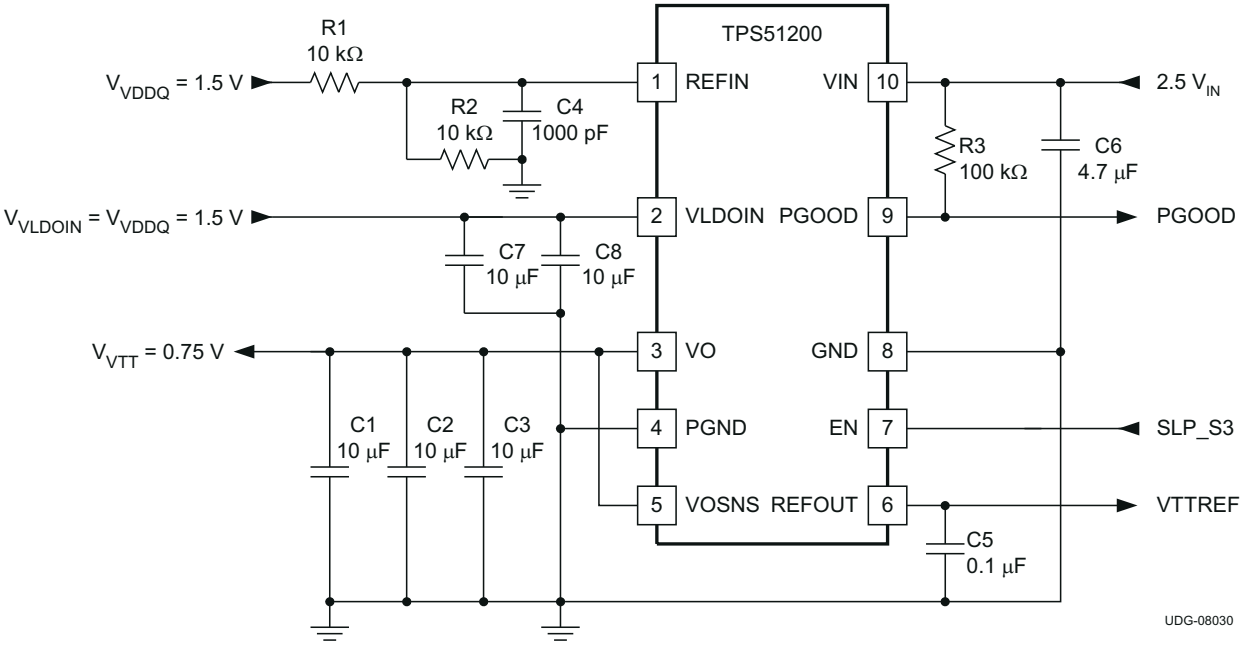

Figure 7-6. 2.5V_{IN}, DDR3 Configuration

Table 7-3. 2.5V_{IN}, DDR3 Configuration List of Materials

REFERENCE DESIGNATOR	DESCRIPTION	SPECIFICATION	PART NUMBER	MANUFACTURER
R1, R2	Resistor	10kΩ		
R3		100kΩ		
C1, C2, C3	Capacitor	10µF, 6.3V	GRM21BR70J106KE76L	Murata
C4		1000pF		
C5		0.1µF		
C6		4.7µF, 6.3V	GRM21BR60J475KA11L	Murata
C7, C8		10µF, 6.3V	GRM21BR70J106KE76L	Murata

7.3.3 3.3V_{IN}, LP DDR3 or DDR4 Configuration

This example describes a 3.3V_{IN}, LP DDR3 or DDR4 configuration application.

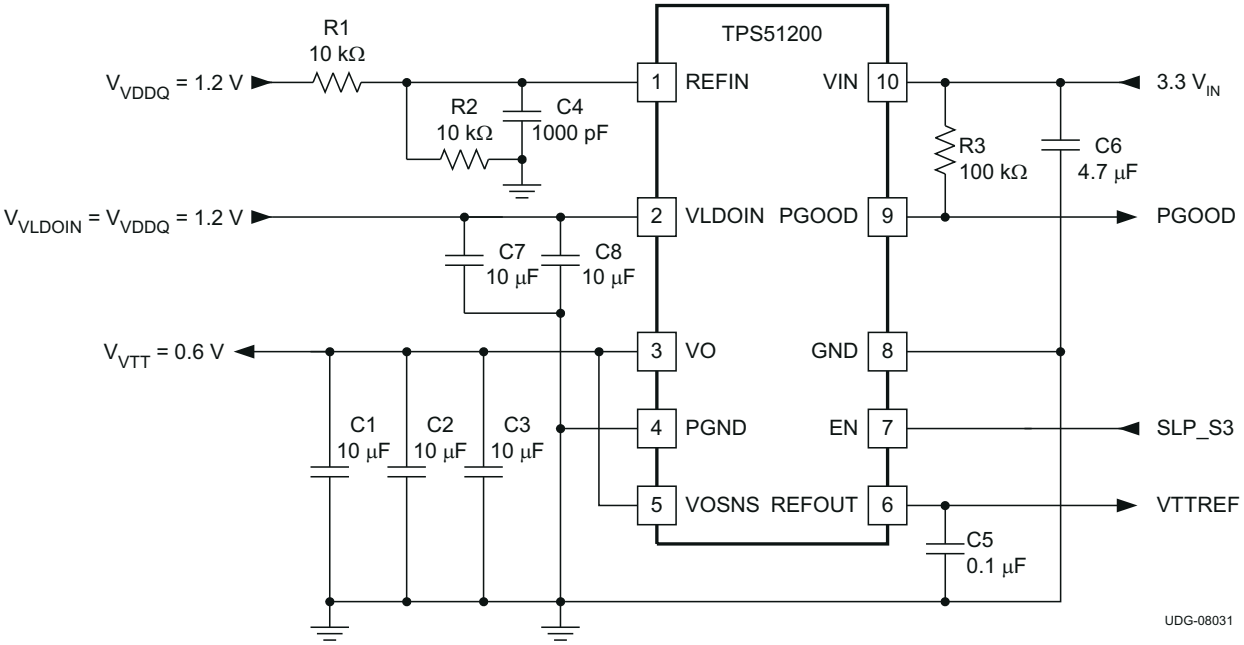

Figure 7-7. 3.3V_{IN}, LP DDR3 or DDR4 Configuration

Table 7-4. 3.3V_{IN}, LP DDR3 or DDR4 Configuration

REFERENCE DESIGNATOR	DESCRIPTION	SPECIFICATION	PART NUMBER	MANUFACTURER
R1, R2	Resistor	10kΩ		
R3		100kΩ		
C1, C2, C3	Capacitor	10µF, 6.3V	GRM21BR70J106KE76L	Murata
C4		1000pF		
C5		0.1µF		
C6		4.7µF, 6.3V	GRM21BR60J475KA11L	Murata
C7, C8		10µF, 6.3V	GRM21BR70J106KE76L	Murata

Copyright © 2025 Texas Instruments Incorporated

7.3.4 3.3V_{IN}, DDR3 Tracking Configuration

This design example describes a 3.3V_{IN}, DDR3 tracking configuration application.

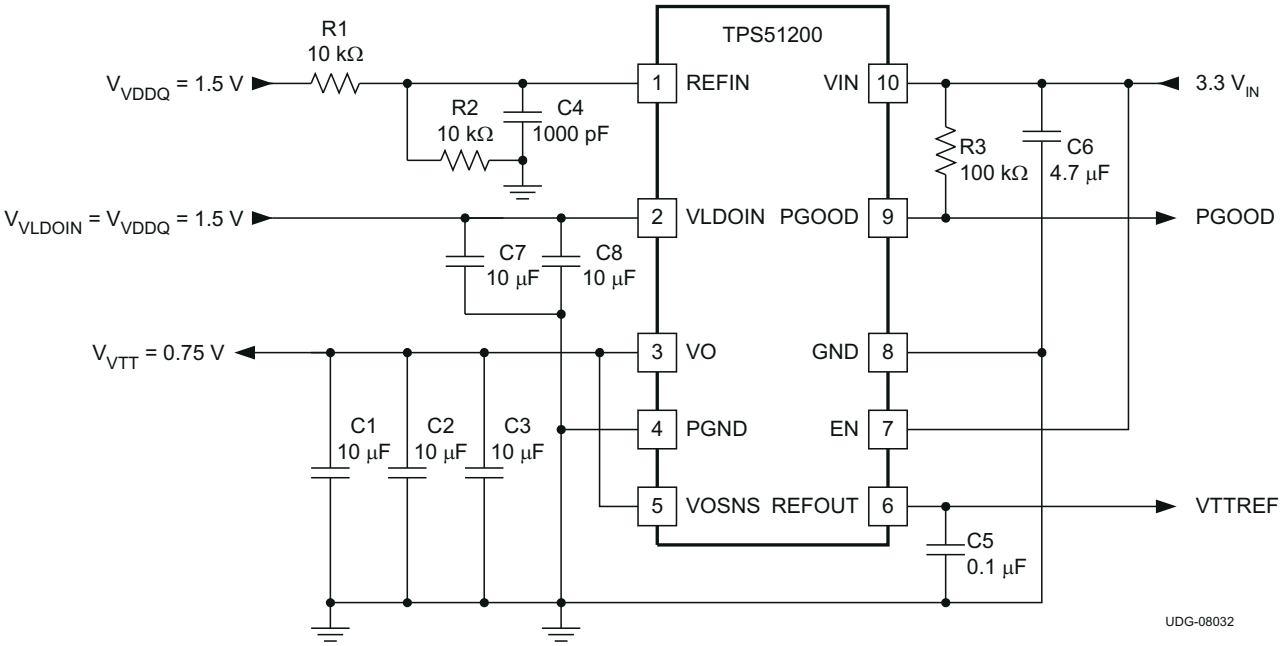

Figure 7-8. 3.3V_{IN}, DDR3 Tracking Configuration

Table 7-5. 3.3V_{IN}, DDR3 Tracking Configuration List of Materials

REFERENCE DESIGNATOR	DESCRIPTION	SPECIFICATION	PART NUMBER	MANUFACTURER
R1, R2	Resistor	10kΩ		
R3		100kΩ		
C1, C2, C3	Capacitor	10µF, 6.3V	GRM21BR70J106KE76L	Murata
C4		1000pF		
C5		0.1µF		
C6		4.7µF, 6.3V	GRM21BR60J475KA11L	Murata
C7, C8		10µF, 6.3V	GRM21BR70J106KE76L	Murata

7.3.5 3.3V_{IN}, LDO Configuration

This example describes a 3.3V_{IN}, LDO configuration application.

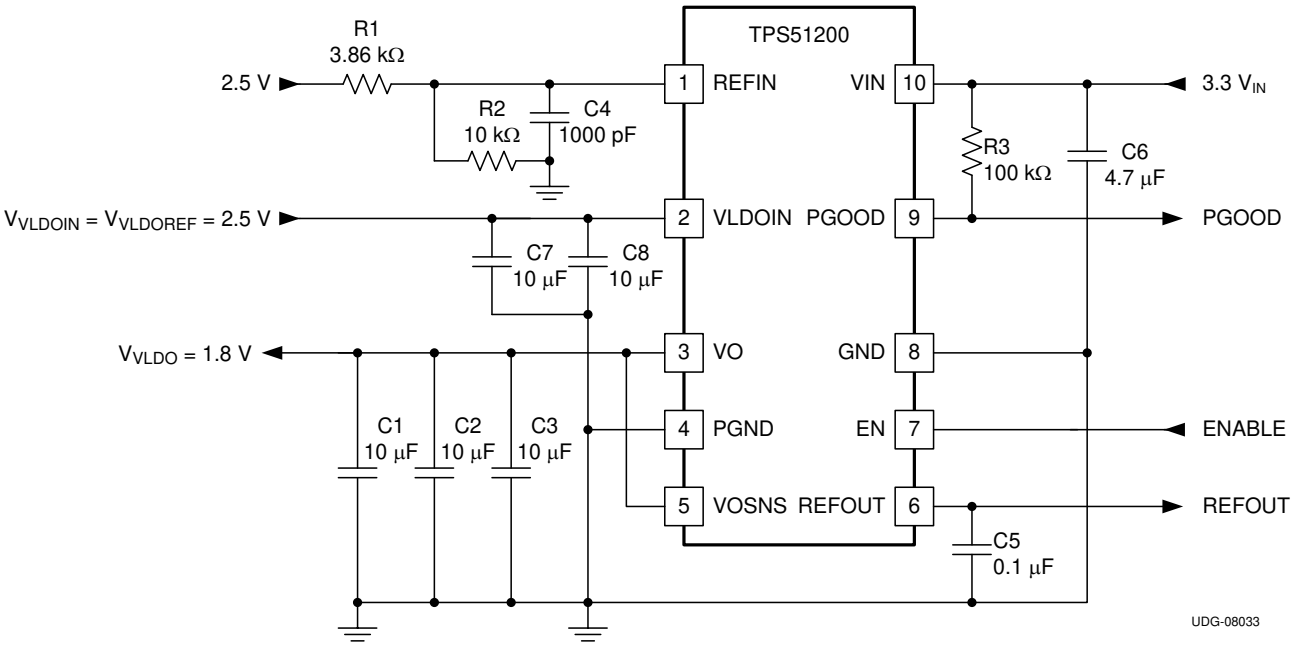

Figure 7-9. 3.3V_{IN}, LDO Configuration

Table 7-6. 3.3V_{IN}, LDO Configuration List of Materials

REFERENCE DESIGNATOR	DESCRIPTION	SPECIFICATION	PART NUMBER	MANUFACTURER
R1	Resistor	3.86kΩ		
R2		10kΩ		
R3		100kΩ		
C1, C2, C3	Capacitor	10µF, 6.3V	GRM21BR70J106KE76L	Murata
C4		1000pF		
C5		0.1µF		
C6		4.7µF, 6.3V	GRM21BR60J475KA11L	Murata
C7, C8		10µF, 6.3V	GRM21BR70J106KE76L	Murata

Copyright © 2025 Texas Instruments Incorporated

7.3.6 3.3V_{IN}, DDR3 Configuration with LFP

This design example describes a 3.3V_{IN}, DDR3 configuration with LFP application.

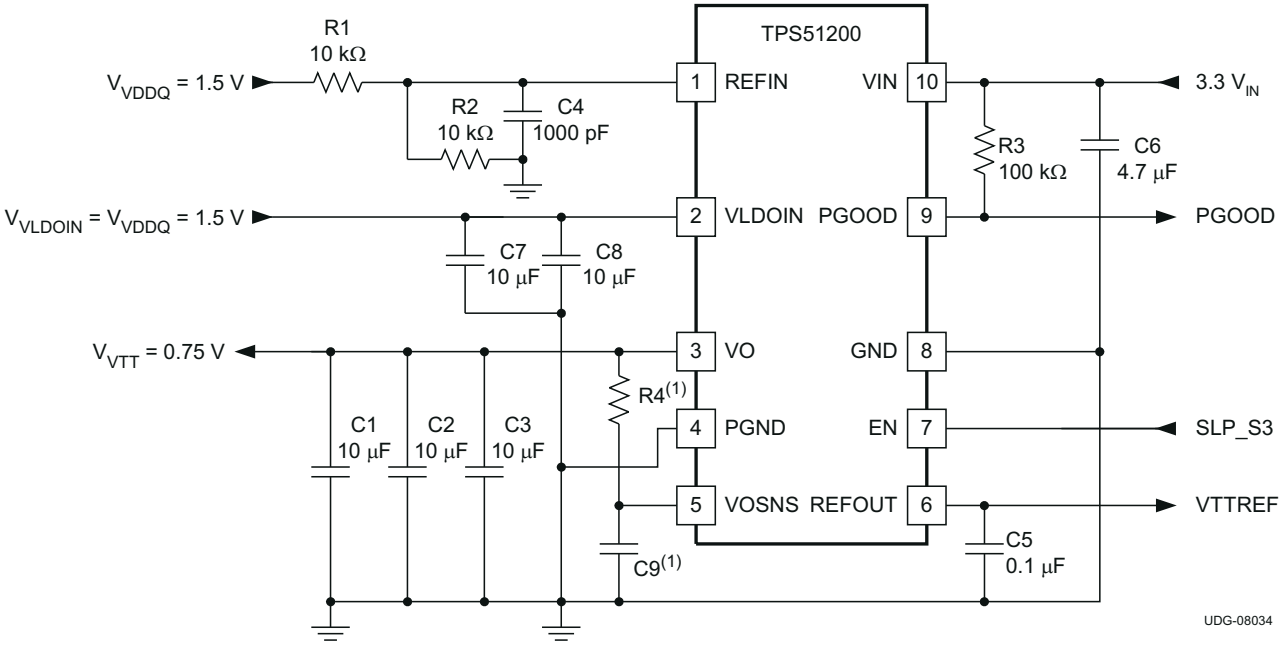

Figure 7-10. 3.3V_{IN}, DDR3 Configuration with LFP

Table 7-7. 3.3V_{IN}, DDR3 Configuration with LFP List of Materials

REFERENCE DESIGNATOR	DESCRIPTION	SPECIFICATION	PART NUMBER	MANUFACTURER
R1, R2	Resistor	10kΩ		
R3		100kΩ		
R4(1)				
C1, C2, C3	Capacitor	10µF, 6.3V	GRM21BR70J106KE76L	Murata
C4		1000pF		
C5		0.1µF		
C6		4.7µF, 6.3V	GRM21BR60J475KA11L	Murata
C7, C8		10µF, 6.3V	GRM21BR70J106KE76L	Murata
C9(1)				

(1) Choose values for R4 and C9 to reduce the parasitic effect of the trace (between VO and the output MLCCs) and the output capacitors (ESR and ESL).

7.4 Power Supply Recommendations

This device is designed to operate from an input bias voltage from 2.375V to 3.5V, with LDO input from 1.1 V to 3.5 V. Refer to Figure 6-1 and Figure 6-2 for recommended power-up sequence. Maintain a EN voltage equal or lower than V_{VIN} at all times. VLDOIN can ramp up earlier than VIN if the sequence in Figure 6-1 and Figure 6-2 cannot be used. The input supplies should be well regulated. VLDOIN decoupling capacitance of 2 × 10µF is recommended, and VIN decoupling capacitance of 1 × 4.7µF is recommended.

7.5 Layout

7.5.1 Layout Guidelines

Consider the following points before starting the TPS51200 device layout design.

- Place the input capacitors as close to VDLOIN pin as possible with short and wide connection.
- Place the output capacitor as close to VO pin as possible with short and wide connection. Place a ceramic capacitor with a value of at least 10µF as close to VO pin if the rest of output capacitors need to be placed on the load side.
- Connect the VOSNS pin to the positive node of output capacitors as a separate trace. In DDR VTT application, connect the VO sense trace to DIMM side to ensure the VTT voltage at DIMM side is well regulated.
- Consider adding low-pass filter at VOSNS if the VO sense trace is very long.
- Connect the GND pin and PGND pin to the thermal pad directly.
- TPS51200 uses its thermal pad to dissipate heat. In order to effectively remove heat fromTPS51200 package, place numerous ground vias on the thermal pad. Use large ground copper plane, especially the copper plane on surface layer, to pour over those vias on thermal pad.
- Consult the TPS51200EVM User's Guide (SLUU323) for detailed layout recommendations.

7.5.2 Layout Example

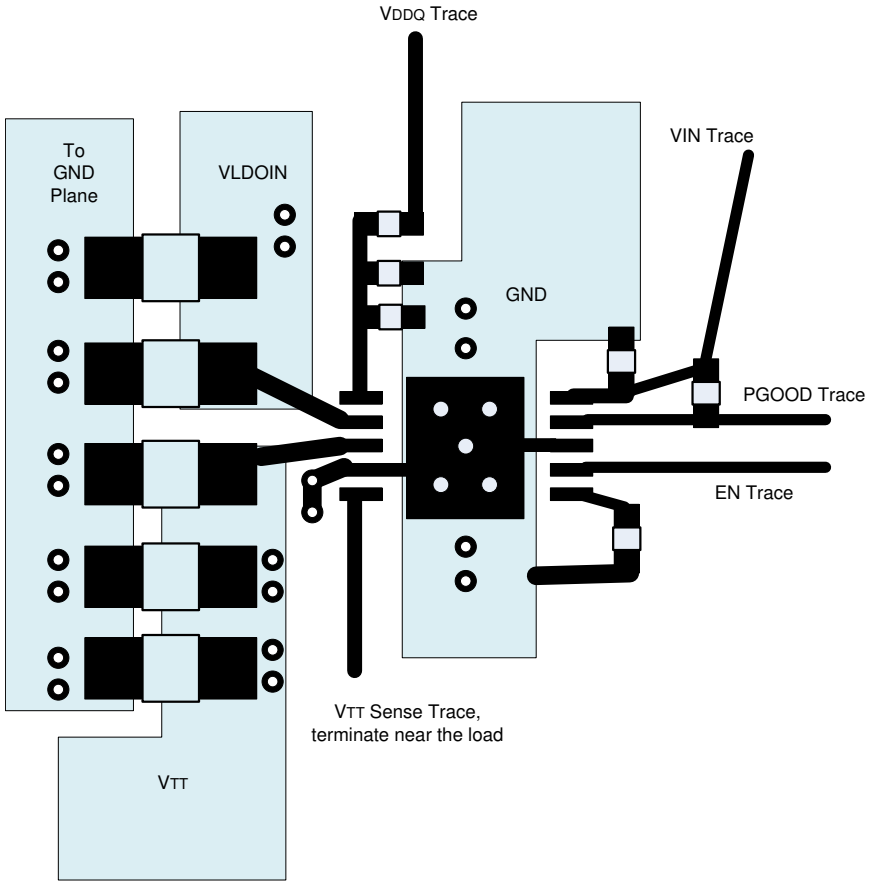

Figure 7-11. Layout Recommendation

Copyright © 2025 Texas Instruments Incorporated

7.5.3 Thermal Design Considerations

Because the TPS51200 is a linear regulator, the VO current flows in both source and sink directions, thereby dissipating power from the device. When the device is sourcing current, the voltage difference shown in Equation 5 calculates the power dissipation.

$$P_{D_SRC} = (V_{VLDOIN} - V_{VO}) \times I_{O_SRC} \tag{5}$$

In this case, if the VLDOIN pin is connected to an alternative power supply lower than the V_{DDQ} voltage, overall power loss can be reduced. During the sink phase, the device applies the VO voltage across the internal LDO regulator. Equation 6 calculates he power dissipation, P_{D_SNK} can be calculated by .

$$P_{D_SNK} = V_{VO} \times I_{SNK} \tag{6}$$

Because the device does not sink and source current at the same time and the I/O current may vary rapidly with time, the actual power dissipation should be the time average of the above dissipations over the thermal relaxation duration of the system. The current used for the internal current control circuitry from the VIN supply and the VLDOIN supply are other sources of power consumption. This power can be estimated as 5mW or less during normal operating conditions and must be effectively dissipated from the package.

Maximum power dissipation allowed by the package is calculated by Equation 7.

$$P_{PKG} = \frac{T_{J(max)} - T_{A(max)}}{\theta_{JA}} \tag{7}$$

where

- $T_{J(max)}$ is 125°C
- $T_{A(max)}$ is the maximum ambient temperature in the system
- θ_{JA} is the thermal resistance from junction to ambient

Note

Because Equation 7 demonstrates the effects of heat spreading in the ground plane, use it as a guideline only. Do not use Equation 7 to estimate actual thermal performance in real application environments.

In an application where the device is mounted on PCB, TI strongly recommends using ψ_{JT} and ψ_{JB}, as explained in the section pertaining to estimating junction temperature in the *Semiconductor and IC Package Thermal Metrics* application report, SPRA953. Using the thermal metrics ψ_{JT} and ψ_{JB}, as shown in the *Section 5.4* table, estimate the junction temperature with corresponding formulas shown in Equation 8. The older θ_{JC} top parameter specification is listed as well for the convenience of backward compatibility.

$$T_J = T_T + \Psi_{JT} \times P_D \tag{8}$$

$$T_J = T_B + \Psi_{JB} \times P_D \tag{9}$$

where

- P_D is the power dissipation shown in Equation 5 and Equation 6
- T_T is the temperature at the center-top of the IC package
- T_B is the PCB temperature measured 1mm away from the thermal pad package on the PCB surface (see Figure 7-13).

Note

Both T_T and T_B can be measured on actual application boards using a thermo-gun (an infrared thermometer). For more information about measuring T_T and T_B, see the application report *Using New Thermal Metrics* (SBVA025).

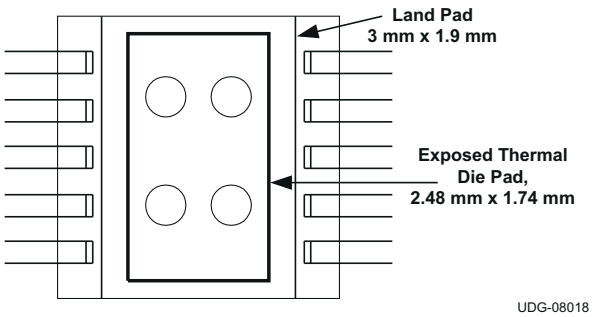

Figure 7-12. Recommended Land Pad Pattern

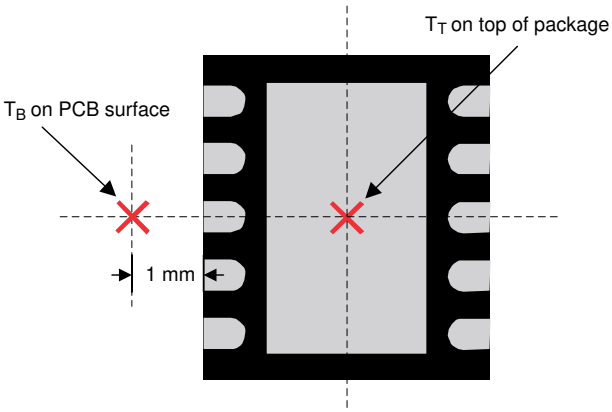

Figure 7-13. Package Thermal Measurement

Copyright © 2025 Texas Instruments Incorporated

8 Device and Documentation Support

8.1 Device Support

8.1.1 Development Support

8.1.1.1 Evaluation Modules

An evaluation module (EVM) is available to assist in the initial circuit performance evaluation using the TPS51200 device. The TPS51200EVM evaluation module and related user's guide (SLUU323) can be requested at the Texas Instruments website through the product folders or purchased directly from the TI eStore.

8.1.1.2 Spice Models

Computer simulation of circuit performance using SPICE is often useful when analyzing the performance of analog circuits and systems. A SPICE model for the TPS51200 device is available here.

8.2 Documentation Support

8.2.1 Related Documentation

- *Using New Thermal Metrics*, SBVA025
- *Semiconductor and IC Package Thermal Metrics*, SPRA953
- *Using the TPS51200 EVM Sink/Source DDR Termination Regulator*, SLUU323
- For more information on the TPS51100 device, see the product folder on ti.com.

8.3 Receiving Notification of Documentation Updates

To receive notification of documentation updates, navigate to the device product folder on ti.com. Click on *Notifications* to register and receive a weekly digest of any product information that has changed. For change details, review the revision history included in any revised document.

8.4 Support Resources

TI E2E™ support forums are an engineer's go-to source for fast, verified answers and design help — straight from the experts. Search existing answers or ask your own question to get the quick design help you need.

Linked content is provided "AS IS" by the respective contributors. They do not constitute TI specifications and do not necessarily reflect TI's views; see TI's Terms of Use.

8.5 Trademarks

TI E2E™ is a trademark of Texas Instruments.
All trademarks are the property of their respective owners.

8.6 Electrostatic Discharge Caution

This integrated circuit can be damaged by ESD. Texas Instruments recommends that all integrated circuits be handled with appropriate precautions. Failure to observe proper handling and installation procedures can cause damage.

ESD damage can range from subtle performance degradation to complete device failure. Precision integrated circuits may be more susceptible to damage because very small parametric changes could cause the device not to meet its published specifications.

8.7 Glossary

TI Glossary	This glossary lists and explains terms, acronyms, and definitions.

9 Revision History

NOTE: Page numbers for previous revisions may differ from page numbers in the current version.

Changes from Revision D (February 2020) to Revision E (September 2025)	Page
• Updated the numbering format for tables, figures, and cross-references throughout the document	1
• Updated $R_{\theta JA}$ metric from 55.6°C/W to 84.6°C/W	4
• Updated $R_{\theta JC(top)}$ metric from 84.6°C/W to 55.6°C/W	4

Changes from Revision C (November 2016) to Revision D (February 2020)	Page
• Added "keep total REFOUT capacitance below 0.47µF" in Pin Functions table	3

Changes from Revision B (September 2016) to Revision C (November 2016)	Page
• Added references to DDR3L DRAM technology throughout	1
• Added DDR3L test conditions to *Output DC voltage, VO* and *REFOUT* specification	5
• Added Figure 5-4	7
• Added Figure 5-9	7
• Updated Figure 5-16 to include DDR3L data	7

Changes from Revision A (September 2015) to Revision B (May 2016)	Page
• Changed " –10mA < I_{REFOUT} < 10mA" to "–1mA < I_{REFOUT} < 1mA" in all test conditions for the *REFOUT voltage tolerance to V_{REFIN}* specification	5
• Changed all MIN and MAX values from "15" to "12" for all test conditions for the *REFOUT voltage tolerance to V_{REFIN}* specification	5
• Updated Figure 6-1	11
• Added *Section 6.3.12* section	15
• Updated Figure 7-5 and Table 7-2	20
• Added clarity to *Section 7.5.1* section	26

Changes from Revision * (February 2008) to Revision A (September 2015)	Page
• Added *Pin Configuration and Functions* section, *ESD Rating* table, *Feature Description* section, *Device Functional Modes*, *Application and Implementation* section, *Power Supply Recommendations* section, *Layout* section, *Device and Documentation Support* section, and *Mechanical, Packaging, and Orderable Information* section	1
• Changed “PowerPAD” references to “thermal pad” throughout	3
• Deleted *Dissipation Ratings* table	4

Copyright © 2025 Texas Instruments Incorporated

10 Mechanical, Packaging, and Orderable Information

The following pages include mechanical, packaging, and orderable information. This information is the most current data available for the designated devices. This data is subject to change without notice and revision of this document. For browser-based versions of this data sheet, refer to the left-hand navigation.

PACKAGING INFORMATION

Orderable part number	Status (1)	Material type (2)	Package | Pins	Package qty | Carrier	RoHS (3)	Lead finish/ Ball material (4)	MSL rating/ Peak reflow (5)	Op temp (°C)	Part marking (6)
TPS51200DRCR	Active	Production	VSON (DRC) | 10	3000 | LARGE T&R	Yes	NIPDAU	Level-2-260C-1 YEAR	-40 to 85	1200
TPS51200DRCR.A	Active	Production	VSON (DRC) | 10	3000 | LARGE T&R	Yes	NIPDAU	Level-2-260C-1 YEAR	-40 to 85	1200
TPS51200DRCR.B	Active	Production	VSON (DRC) | 10	3000 | LARGE T&R	Yes	NIPDAU	Level-2-260C-1 YEAR	-40 to 85	1200
TPS51200DRCRG4	Active	Production	VSON (DRC) | 10	3000 | LARGE T&R	Yes	NIPDAU	Level-2-260C-1 YEAR	-40 to 85	1200
TPS51200DRCT	Active	Production	VSON (DRC) | 10	250 | SMALL T&R	Yes	NIPDAU	Level-2-260C-1 YEAR	-40 to 85	1200
TPS51200DRCT.A	Active	Production	VSON (DRC) | 10	250 | SMALL T&R	Yes	NIPDAU	Level-2-260C-1 YEAR	-40 to 85	1200
TPS51200DRCT.B	Active	Production	VSON (DRC) | 10	250 | SMALL T&R	Yes	NIPDAU	Level-2-260C-1 YEAR	-40 to 85	1200
TPS51200DRCTG4	Active	Production	VSON (DRC) | 10	250 | SMALL T&R	Yes	NIPDAU	Level-2-260C-1 YEAR	-40 to 85	1200

(1) **Status:** For more details on status, see our product life cycle.

(2) **Material type:** When designated, preproduction parts are prototypes/experimental devices, and are not yet approved or released for full production. Testing and final process, including without limitation quality assurance, reliability performance testing, and/or process qualification, may not yet be complete, and this item is subject to further changes or possible discontinuation. If available for ordering, purchases will be subject to an additional waiver at checkout, and are intended for early internal evaluation purposes only. These items are sold without warranties of any kind.

(3) **RoHS values:** Yes, No, RoHS Exempt. See the TI RoHS Statement for additional information and value definition.

(4) **Lead finish/Ball material:** Parts may have multiple material finish options. Finish options are separated by a vertical ruled line. Lead finish/Ball material values may wrap to two lines if the finish value exceeds the maximum column width.

(5) **MSL rating/Peak reflow:** The moisture sensitivity level ratings and peak solder (reflow) temperatures. In the event that a part has multiple moisture sensitivity ratings, only the lowest level per JEDEC standards is shown. Refer to the shipping label for the actual reflow temperature that will be used to mount the part to the printed circuit board.

(6) **Part marking:** There may be an additional marking, which relates to the logo, the lot trace code information, or the environmental category of the part.

Multiple part markings will be inside parentheses. Only one part marking contained in parentheses and separated by a "~" will appear on a part. If a line is indented then it is a continuation of the previous line and the two combined represent the entire part marking for that device.

Important Information and Disclaimer: The information provided on this page represents TI's knowledge and belief as of the date that it is provided. TI bases its knowledge and belief on information provided by third parties, and makes no representation or warranty as to the accuracy of such information. Efforts are underway to better integrate information from third parties. TI has taken and continues to take reasonable steps to provide representative and accurate information but may not have conducted destructive testing or chemical analysis on incoming materials and chemicals. TI and TI suppliers consider certain information to be proprietary, and thus CAS numbers and other limited information may not be available for release.

In no event shall TI's liability arising out of such information exceed the total purchase price of the TI part(s) at issue in this document sold by TI to Customer on an annual basis.

OTHER QUALIFIED VERSIONS OF TPS51200 :

- Automotive : TPS51200-Q1
- Enhanced Product : TPS51200-EP

NOTE: Qualified Version Definitions:

- Automotive - Q100 devices qualified for high-reliability automotive applications targeting zero defects
- Enhanced Product - Supports Defense, Aerospace and Medical Applications

TAPE AND REEL INFORMATION

REEL DIMENSIONS

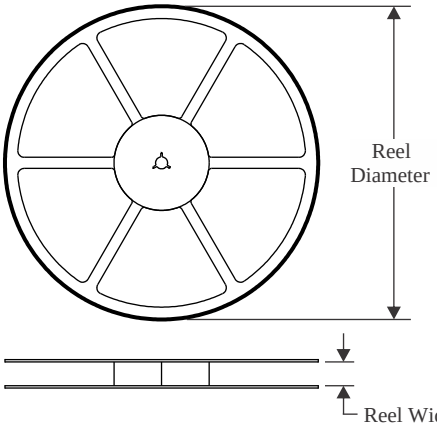

TAPE DIMENSIONS

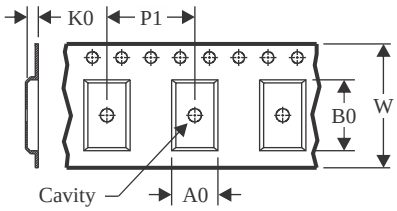

A0	Dimension designed to accommodate the component width
B0	Dimension designed to accommodate the component length
K0	Dimension designed to accommodate the component thickness
W	Overall width of the carrier tape
P1	Pitch between successive cavity centers

QUADRANT ASSIGNMENTS FOR PIN 1 ORIENTATION IN TAPE

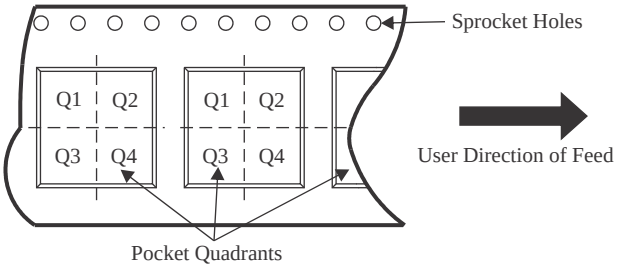

*All dimensions are nominal

Device	Package Type	Package Drawing	Pins	SPQ	Reel Diameter (mm)	Reel Width W1 (mm)	A0 (mm)	B0 (mm)	K0 (mm)	P1 (mm)	W (mm)	Pin1 Quadrant
TPS51200DRCR	VSON	DRC	10	3000	330.0	12.4	3.3	3.3	1.1	8.0	12.0	Q2
TPS51200DRCR	VSON	DRC	10	3000	330.0	12.4	3.3	3.3	1.1	8.0	12.0	Q2
TPS51200DRCR	VSON	DRC	10	3000	330.0	12.4	3.3	3.3	1.1	8.0	12.0	Q2
TPS51200DRCR	VSON	DRC	10	3000	330.0	12.4	3.3	3.3	1.1	8.0	12.0	Q2
TPS51200DRCT	VSON	DRC	10	250	180.0	12.5	3.3	3.3	1.1	8.0	12.0	Q2
TPS51200DRCT	VSON	DRC	10	250	180.0	12.4	3.3	3.3	1.1	8.0	12.0	Q2
TPS51200DRCT	VSON	DRC	10	250	180.0	12.4	3.3	3.3	1.1	8.0	12.0	Q2

TAPE AND REEL BOX DIMENSIONS

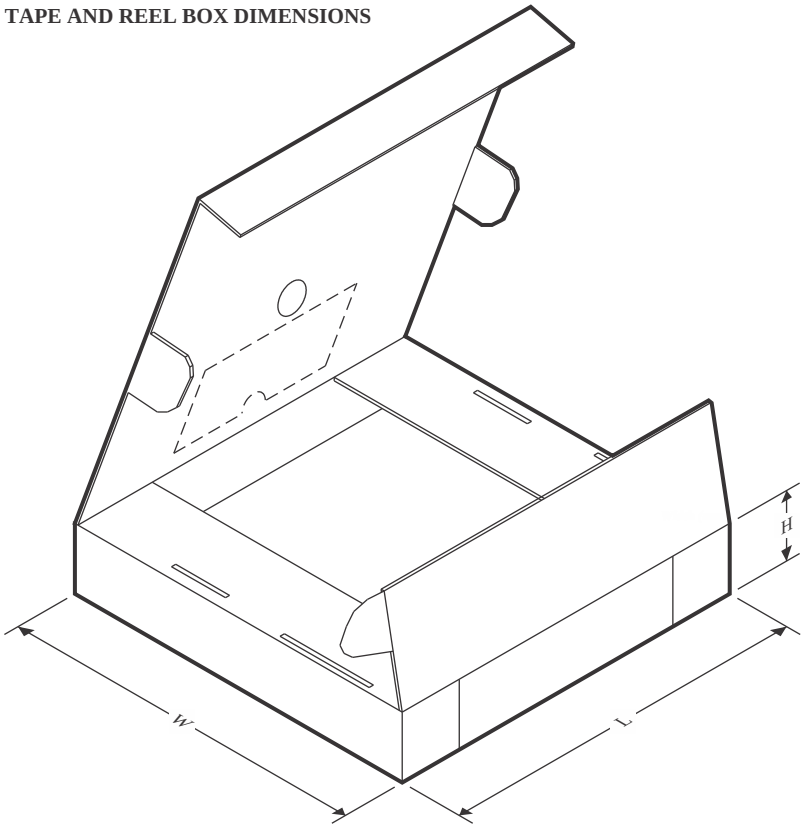

*All dimensions are nominal

Device	Package Type	Package Drawing	Pins	SPQ	Length (mm)	Width (mm)	Height (mm)
TPS51200DRCR	VSON	DRC	10	3000	353.0	353.0	32.0
TPS51200DRCR	VSON	DRC	10	3000	346.0	346.0	33.0
TPS51200DRCR	VSON	DRC	10	3000	360.0	360.0	36.0
TPS51200DRCR	VSON	DRC	10	3000	338.0	355.0	35.0
TPS51200DRCT	VSON	DRC	10	250	338.0	355.0	35.0
TPS51200DRCT	VSON	DRC	10	250	210.0	185.0	35.0
TPS51200DRCT	VSON	DRC	10	250	210.0	185.0	35.0

GENERIC PACKAGE VIEW

DRC 10

VSON - 1 mm max height

3 x 3, 0.5 mm pitch

PLASTIC SMALL OUTLINE - NO LEAD

This image is a representation of the package family, actual package may vary.
Refer to the product data sheet for package details.

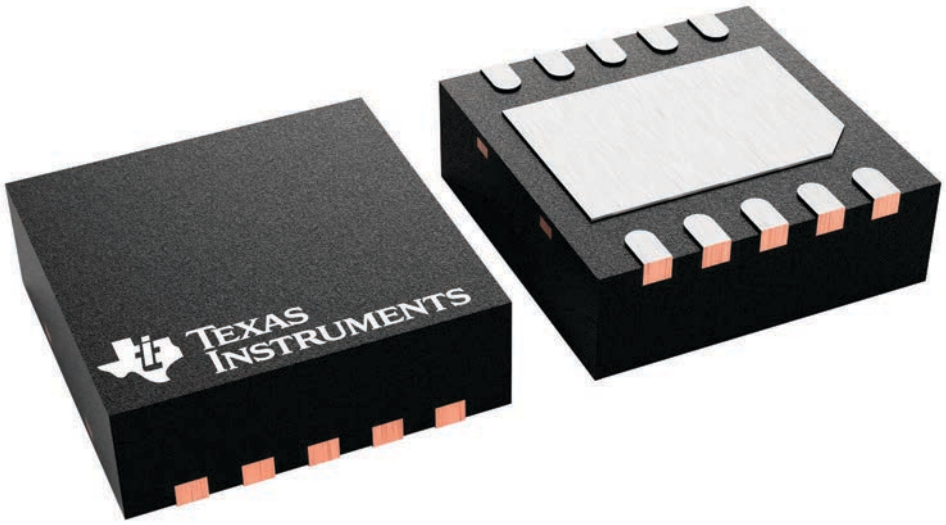

4226193/A

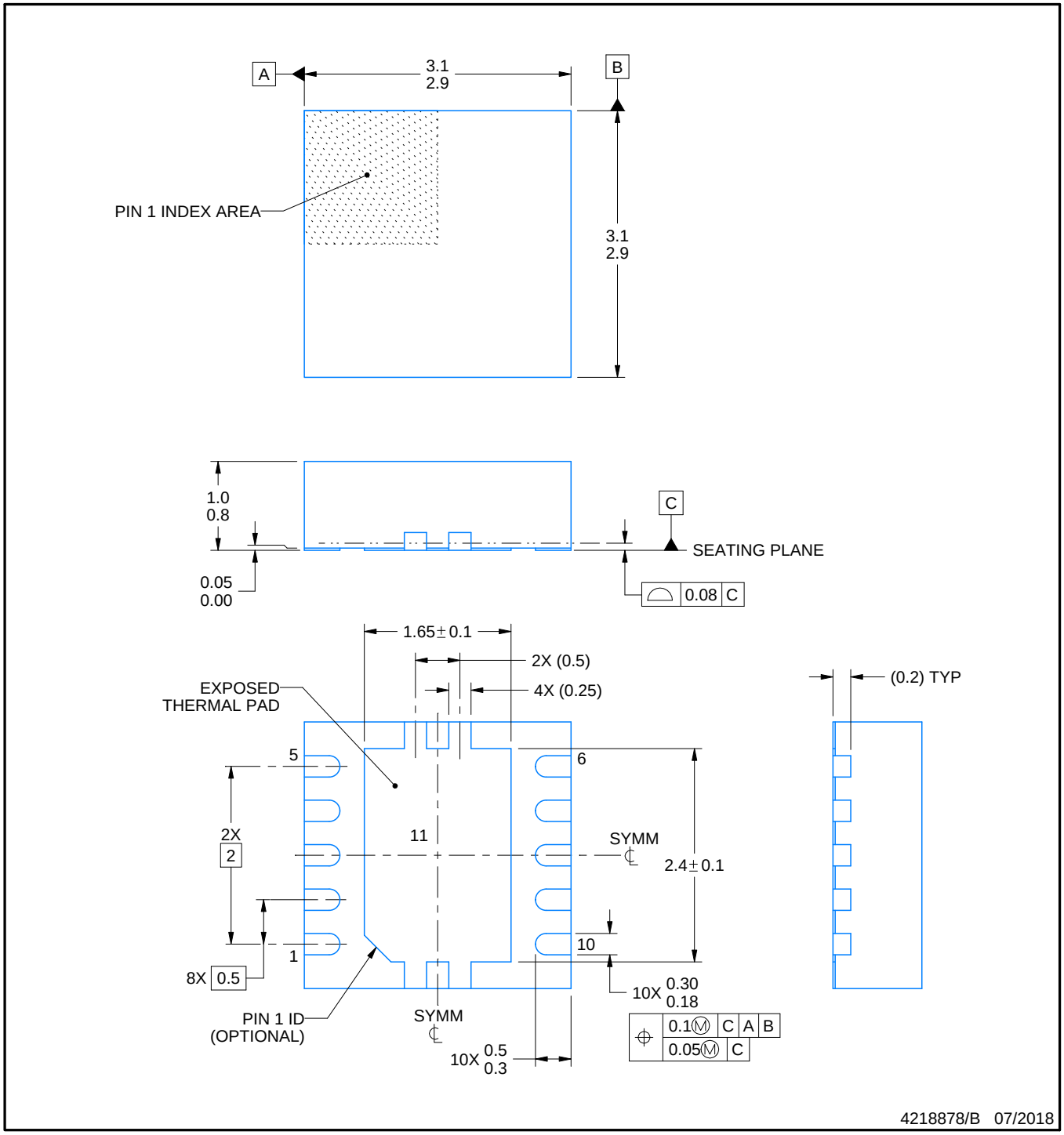

NOTES:

1. All linear dimensions are in millimeters. Any dimensions in parenthesis are for reference only. Dimensioning and tolerancing per ASME Y14.5M.
2. This drawing is subject to change without notice.
3. The package thermal pad must be soldered to the printed circuit board for optimal thermal and mechanical performance.

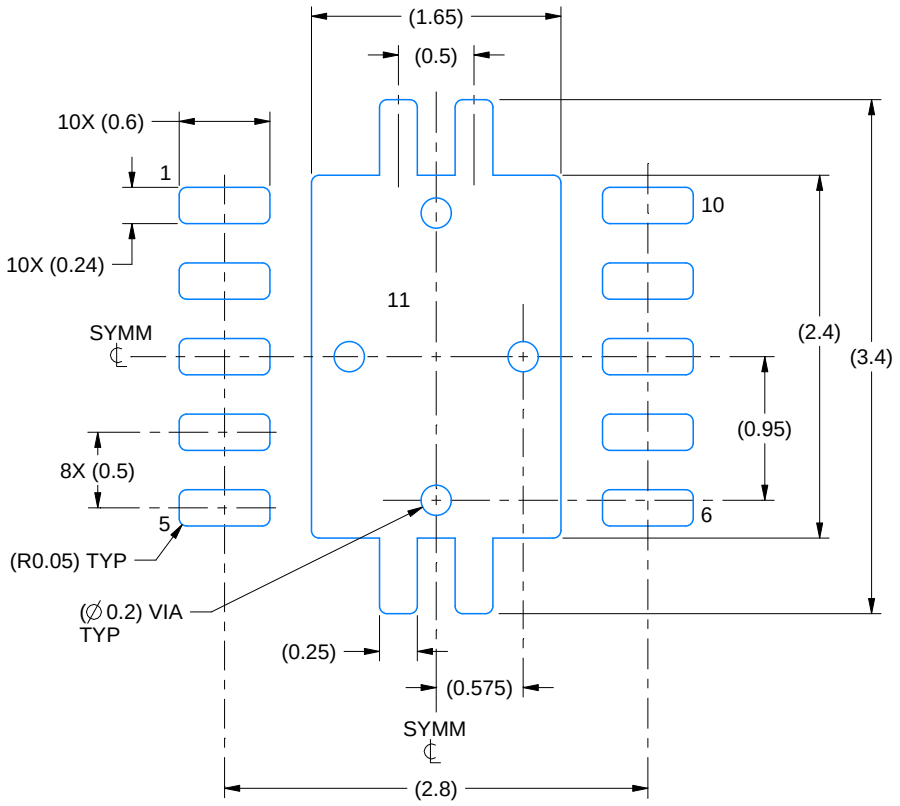

LAND PATTERN EXAMPLE
EXPOSED METAL SHOWN
SCALE:20X

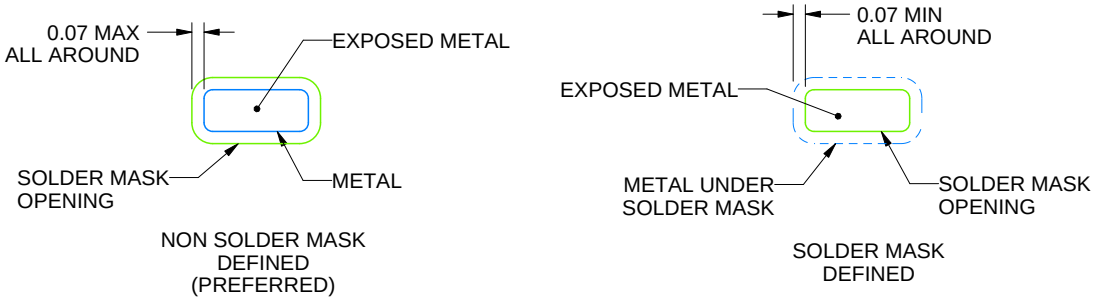

SOLDER MASK DETAILS

4218878/B 07/2018

NOTES: (continued)

4. This package is designed to be soldered to a thermal pad on the board. For more information, see Texas Instruments literature number SLUA271 (www.ti.com/lit/slua271).
5. Vias are optional depending on application, refer to device data sheet. If any vias are implemented, refer to their locations shown on this view. It is recommended that vias under paste be filled, plugged or tented.

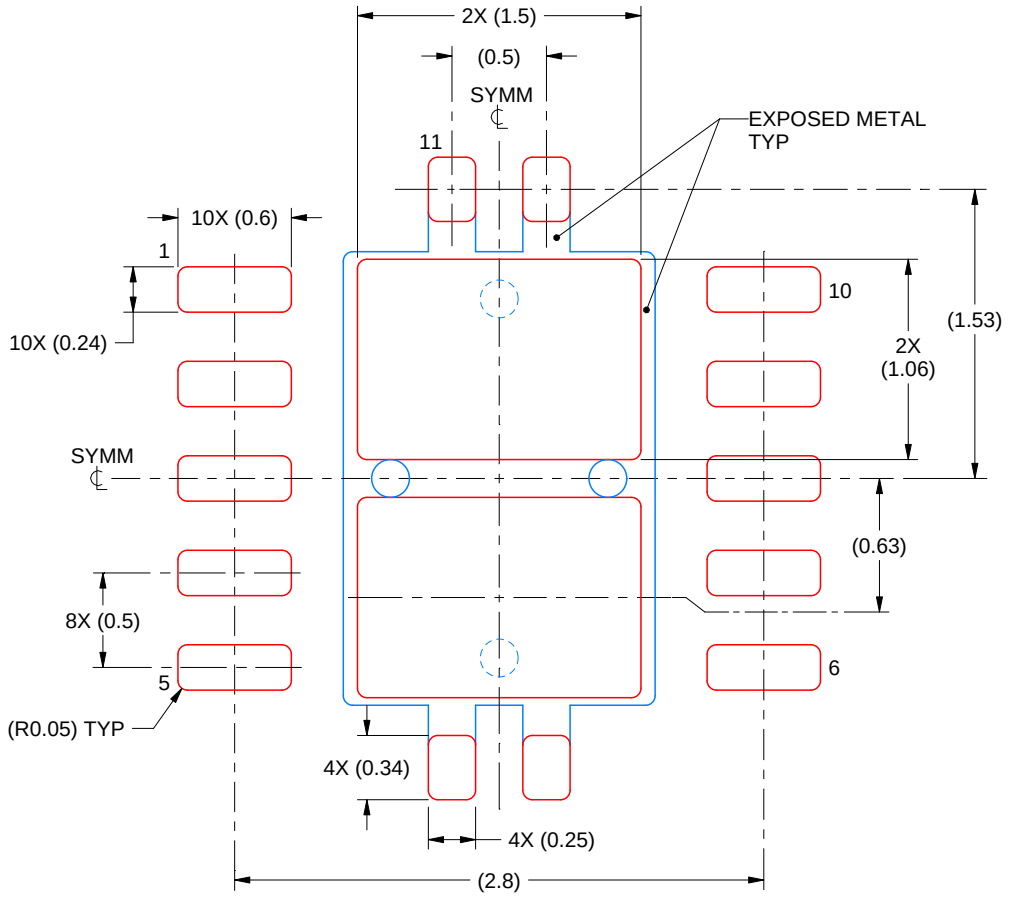

SOLDER PASTE EXAMPLE
BASED ON 0.125 mm THICK STENCIL

EXPOSED PAD 11:
80% PRINTED SOLDER COVERAGE BY AREA
SCALE:25X

4218878/B 07/2018

NOTES: (continued)

6. Laser cutting apertures with trapezoidal walls and rounded corners may offer better paste release. IPC-7525 may have alternate design recommendations.

IMPORTANT NOTICE AND DISCLAIMER

TI PROVIDES TECHNICAL AND RELIABILITY DATA (INCLUDING DATASHEETS), DESIGN RESOURCES (INCLUDING REFERENCE DESIGNS), APPLICATION OR OTHER DESIGN ADVICE, WEB TOOLS, SAFETY INFORMATION, AND OTHER RESOURCES “AS IS” AND WITH ALL FAULTS, AND DISCLAIMS ALL WARRANTIES, EXPRESS AND IMPLIED, INCLUDING WITHOUT LIMITATION ANY IMPLIED WARRANTIES OF MERCHANTABILITY, FITNESS FOR A PARTICULAR PURPOSE OR NON-INFRINGEMENT OF THIRD PARTY INTELLECTUAL PROPERTY RIGHTS.

These resources are intended for skilled developers designing with TI products. You are solely responsible for (1) selecting the appropriate TI products for your application, (2) designing, validating and testing your application, and (3) ensuring your application meets applicable standards, and any other safety, security, regulatory or other requirements.

These resources are subject to change without notice. TI grants you permission to use these resources only for development of an application that uses the TI products described in the resource. Other reproduction and display of these resources is prohibited. No license is granted to any other TI intellectual property right or to any third party intellectual property right. TI disclaims responsibility for, and you fully indemnify TI and its representatives against any claims, damages, costs, losses, and liabilities arising out of your use of these resources.

TI’s products are provided subject to TI’s Terms of Sale, TI’s General Quality Guidelines, or other applicable terms available either on ti.com or provided in conjunction with such TI products. TI’s provision of these resources does not expand or otherwise alter TI’s applicable warranties or warranty disclaimers for TI products. Unless TI explicitly designates a product as custom or customer-specified, TI products are standard, catalog, general purpose devices.

TI objects to and rejects any additional or different terms you may propose.

Copyright © 2026, Texas Instruments Incorporated

Last updated 10/2025