TPS4812-Q1 100V Low I_Q Automotive High-Side Switch Controller With Bi-directional IMON, Low Power Mode, Load Wakeup, I^2t, and Diagnostics

1 Features

- AEC-Q100 automotive qualified for grade 1 temperature
- 3.5V to 95V input range (100V absolute maximum)
- Reverse input and output protection down to –65V
- Integrated 12V charge pump
- Low I_Q = 20µA in low power mode ($\overline{LPM}$ = Low)
- Low 1µA shutdown current (EN/UVLO = Low)
- Dual gate drive: GATE: 0.5A src/2A sink G: 100µA src/0.39A sink
- Accurate I^2t overcurrent protection (IOC) with adjustable circuit breaker timer (I2t)
- Accurate and fast (5µs) short-circuit protection
- Fast transition (5µs) from low power mode to active mode using adjustable load wakeup threshold or $\overline{LPM}$ trigger with WAKE indication
- Accurate analog bi-directional current monitor output (IMON, I_DIR): ±2% at 30mV V_{SNS}
- NTC based overtemperature sensing (TMP) and monitoring output (ITMPO)
- Fault indication ($\overline{FLT}$) during short circuit fault, I^2t, charge pump UVLO, overtemperature
- TPS48120-Q1 (I^2t enabled), TPS48121-Q1 (I^2t disabled)
- Accurate (±2%) and adjustable undervoltage lockout (UVLO)

2 Applications

- Power distribution box
- Body control module
- DC/DC converter
- Battery management system

3 Description

TPS4812-Q1 is a family of low IQ smart high side drivers with protection and diagnostics. With wide operating voltage range of 3.5V to 95V, 100V absmax the device is suitable for 12V, 24V and 48V automotive system designs.

It has two integrated gate drives with 0.5A source and 2A sink (GATE) and 100µA source and 0.39A sink (G). With $\overline{LPM}$ Low, the low power path is kept ON and the main FETs are turned OFF with IQ of 20µA (typ). Auto Load wakeup threshold adjusted using R_{BYPASS} resistor placed across DRN and CS2–. IQ reduces to 1µA (typ) with EN/UVLO low.

The device has accurate bi-directional current sensing (±2%) output (IMON, I_DIR) with adjustable I^2t based overcurrent and short circuit protection using an external R_{SNS} resistor and $\overline{FLT}$ indication. Auto-retry and latch-off fault behavior can be configured. The device also has NTC based temperature sensing (TMP) and monitoring output (ITMPO) output for overtemperature detection of external FETs.

The TPS4812-Q1 is available in 23-pin VQFN package.

Package Information

PART NUMBER	PACKAGE(1)	PACKAGE SIZE(2)
TPS48120-Q1, TPS48121-Q1	RGE (VQFN, 23)	4.00mm × 4.00mm

(1) For all available packages, see the orderable addendum at the end of the data sheet.
(2) The package size (length × width) is a nominal value and includes pins, where applicable.

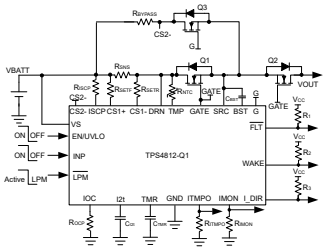

TPS48120-Q1 Application Circuit Driving PAAT Loads With Load Wakeup

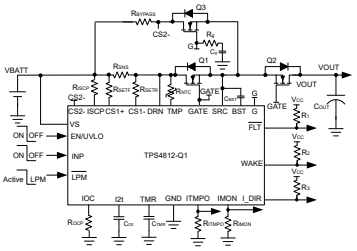

TPS48120-Q1 Application Circuit Driving PAAT Loads With Load Wakeup and Bulk Capacitor Charging

An IMPORTANT NOTICE at the end of this data sheet addresses availability, warranty, changes, use in safety-critical applications, intellectual property matters and other important disclaimers. PRODUCTION DATA.

Table of Contents

1 Features....1
2 Applications....1
3 Description....1
4 Device Comparison....3
5 Pin Configuration and Functions....4
6 Specifications....7
6.1 Absolute Maximum Ratings....7
6.2 ESD Ratings....7
6.3 Recommended Operating Conditions....7
6.4 Thermal Information....8
6.5 Electrical Characteristics....8
6.6 Switching Characteristics....10
6.7 Typical Characteristics....12
7 Parameter Measurement Information....14
8 Detailed Description....17
8.1 Overview....17
8.2 Functional Block Diagram....18
8.3 Feature Description....19
8.4 Device Functional Modes....33
9 Application and Implementation....39
9.1 Application Information....39
9.2 Typical Application 1: Driving Power at all times (PAAT) Loads With Automatic Load Wakeup....39
9.3 Typical Application 2: Driving Power at all times (PAAT) Loads With Automatic Load Wakeup and Output Bulk Capacitor Charging....45
9.4 Power Supply Recommendations....48
9.5 Layout....49
10 Device and Documentation Support....51
10.1 Receiving Notification of Documentation Updates....51
10.2 Support Resources....51
10.3 Trademarks....51
10.4 Electrostatic Discharge Caution....51
10.5 Glossary....51
11 Revision History....51
12 Mechanical, Packaging, and Orderable Information....51

Copyright © 2024 Texas Instruments Incorporated

4 Device Comparison

Table 4-1. Device Comparison

Device name /Feature	TPS48120-Q1	TPS48121-Q1
I^2T Protection	Yes	No

Copyright © 2024 Texas Instruments Incorporated

5 Pin Configuration and Functions

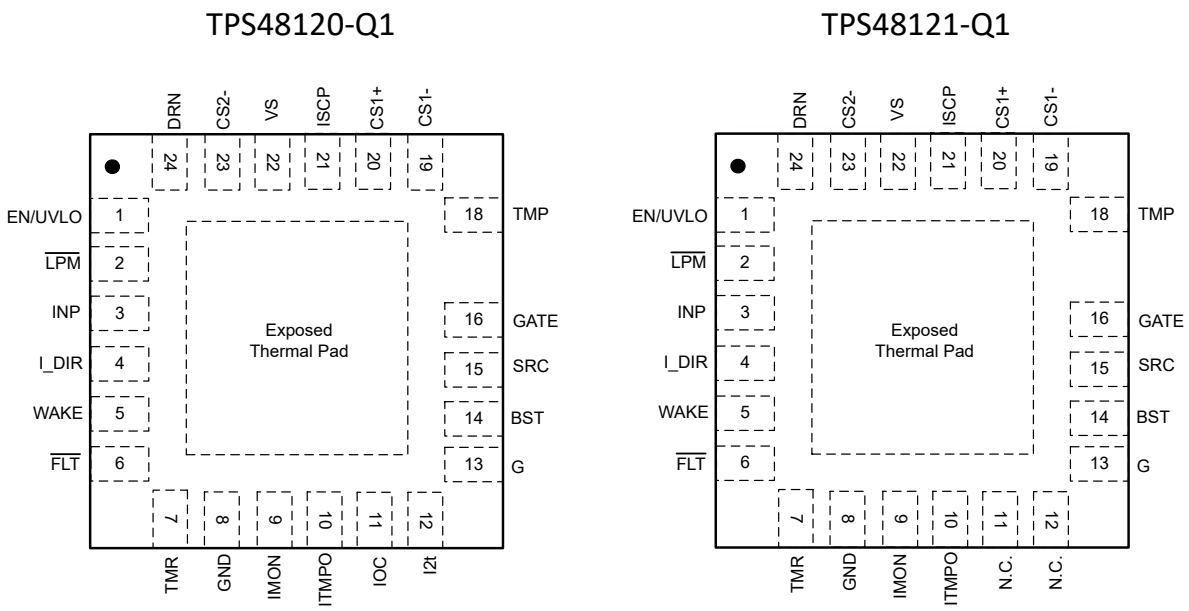

Figure 5-1. RGE Package, 23-Pin VQFN (Transparent Top View)

Table 5-1. Pin Functions

PIN			TYPE[1]	DESCRIPTION
NAME	TPS48120-Q1	TPS48121-Q1		
EN/UVLO	1	1	I	EN/UVLO input. A voltage on this pin above $V_{(UVLOR)}$ 1.21V enables normal operation. If EN/UVLO is below $V_{(UVLOF)}$ then Gate drives are turned OFF. Forcing this pin below $V_{(ENF)}$ 0.3V shuts down the device reducing quiescent current to approximately 1µA (typ). Optionally connect to the input supply through a resistive divider to set the undervoltage lockout. When EN/UVLO is left floating an internal pull down of 100nA pulls EN/UVLO low and keeps the device in OFF state.
$\overline{\text{LPM}}$	2	2	I	Mode control input. When driven high, the device enters into active mode. When driven low, the devices enter into low power mode. If low power mode is not required, $\overline{\text{LPM}}$ pin can be tied to EN/UVLO pin. When $\overline{\text{LPM}}$ is left floating an internal pull down of 100nA pulls $\overline{\text{LPM}}$ low.
INP	3	3	I	Input signal for external FET control. CMOS compatible input reference to GND that sets the state of GATE pin. INP has an internal weak pull down of 100nA to GND to keep GATE pulled to SRC when INP is left floating.
I_DIR	4	4	I	Open drain I_DIR output. This pin is asserted low by device when current through CS1+ and CS1– flows in reverse direction.

Copyright © 2024 Texas Instruments Incorporated

Table 5-1. Pin Functions (continued)

PIN			TYPE[1]	DESCRIPTION
NAME	TPS48120-Q1	TPS48121-Q1		
WAKE	5	5	O	Open drain WAKE output. This pin is asserted low by device when device enters into active mode (when $\overline{LPM}$ is driven high or when a load wakeup event has occurred).
$\overline{FLT}$	6	6	O	Open drain fault output. $\overline{FLT}$ goes low during charge pump UVLO, Main FET SCP, I^2t timer trigger, NTC based external FET overtemperature fault. This pin asserts low after the voltage on the I2t pin has reached the fault threshold of 2V. This pin indicates the main FET is about to turn off due to an overload condition. This pin asserts low along with GATE turn off during short-circuit. The $\overline{FLT}$ pin does not go to a high impedance state until the overcurrent condition and the auto-retry time expire.
TMR	7	7	I	Auto-retry or latch timer input after overcurrent fault. A capacitor across TMR pin to GND sets the times for retry periods. Leave open for fastest setting. Connect resistor across C_{TMR} from TMR pin to GND for latch-off functionality.
GND	8	8	G	Connect GND to system ground.
IMON	9	9	O	Analog bi-directional current monitor output. This pin sources a scaled down ratio of current through the external current sense resistor R_{SNS}. A resistor from this pin to GND converts current proportional to voltage. If unused, leave floating or can be connected to ground.
ITMPO	10	10	O	Analog temperature output. Analog voltage feedback provides a voltage proportional to thermistor temperature. If unused, leave floating.
IOC	11	—	I	Overcurrent detection setting. A resistor across IOC to GND sets the over current comparator threshold. IOC pin can also be driven externally using MCU.
N.C.	—	11	—	No connect.
I2t	12	—	O	I2t timer input. A capacitor across I2t pin to GND sets the times for overcurrent (t_{OC}).
N.C.	—	12	—	No connect.
G	13	13	O	Gate of external bypass FET. 100µA peak source and 0.39A sink capacity. Connect to the gate of the external bypass FET.
BST	14	14	O	High side bootstrapped supply. An external capacitor with a minimum value of 0.1µF should be connected between this pin and SRC. Voltage swing on this pin is 12V to (VIN + 12V).
SRC	15	15	O	Source connection of the external FET.
GATE	16	16	O	High current gate driver pull-up and pull-down. 0.5A peak source and 2A sink capacity. This pin pulls GATE up to BST and down to SRC. For the fastest tun-on and turn-off, tie this pin directly to the gate of the external high side MOSFET in main path.

Copyright © 2024 Texas Instruments Incorporated

Table 5-1. Pin Functions (continued)

PIN			TYPE[1]	DESCRIPTION
NAME	TPS48120-Q1	TPS48121-Q1		
TMP	18	18	I	Temperature input. Analog connection to external NTC thermistor Connect TMP pin directly to VS if this feature is not used
CS1–	19	19	I	Main path current sense negative input. Connect a resistor (R_{SETR}) across CS1– to the external current sense resistor to set IMON gain in reverse direction.
CS1+	20	20	I	Main path current sense positive input. Connect a resistor (R_{SETF}) across CS1+ to the external current sense resistor to set IMON gain in forward direction. Connect CS1+ and CS1– to VBATT if main FET current sensing is not used.
ISCP	21	21	I	Short-circuit detection threshold setting. Connect ISCP to DRN if short-circuit protection is not desired.
VS	22	22	P	Supply pin of the controller.
CS2–	23	23	I	Bypass path current sense negative input.
DRN	24	24	I	Main path SCP sense negative input. Connect DRN+ and CS2– together to VBATT after RSNS if bypass path is not used.
GND	Thermal Pad	—	—	Connect exposed thermal pad to GND plane.

(1) I = Input, O = Output, I/O = Input or Output, G = Ground, P = Power.

Copyright © 2024 Texas Instruments Incorporated

6 Specifications

6.1 Absolute Maximum Ratings

over operating free-air temperature range (unless otherwise noted)(1)

		MIN	MAX	UNIT
Input pins	VS, CS1+, CS1–, DRN, CS2–, ISCP, TMP to GND	–65	100	V
Input pins	VS, CS1+, CS1–, DRN, CS2–, ISCP, TMP to SRC	–65	100	V
Input pins	SRC to GND	–65	100	V
Input pins	GATE, G, BST to SRC	–0.3	19	V
Input pins	TMR to GND	–0.3	5.5	V
Input pins	IOC to GND, TPS48120-Q1 only	–1	5.5	V
Input pins	EN/UVLO, INP, $\overline{LPM}$; $V_{(VS)}$ > 0 V	–1	100	V
Input pins	EN/UVLO, INP, $\overline{LPM}$; $V_{(VS)}$ ≤ 0 V	$V_{(VS)}$	(100 + $V_{(VS)}$)	V
Input pins	CS1+ to CS1–	–0.3	0.4	V
Input pins	DRN to CS2–	–5	100	V
Output pins	$\overline{FLT}$, I_DIR, WAKE to GND	–1	20	V
Output pins	IMON to GND	–1	5.5	V
Output pins	I2t, ITMPO to GND, TPS48120-Q1 only	–1	7.5	V
Output pins	ITMPO to GND, TPS48121-Q1 only	–1	7.5	V
Output pins	GATE, G, BST to GND	–65	112	V
Sink current	$I_{(\overline{FLT})}$, $I_{(I_DIR)}$, $I_{(WAKE)}$		10	mA
Sink current	$I_{(CS1+)}$ to $I_{(CS1–)}$, 1msec ; $I_{(DRN)}$ to $I_{(CS2–)}$, 1msec		100	mA
Operating junction temperature, T_j (2)		–40	150	°C
Storage temperature, T_{stg}		–40	150	

(1) Operation outside the Absolute Maximum Ratings may cause permanent device damage. Absolute Maximum Ratings do not imply functional operation of the device at these or any other conditions beyond those listed under Recommended Operating Conditions. If used outside the Recommended Operating Conditions but within the Absolute Maximum Ratings, the device may not be fully functional, and this may affect device reliability, functionality, performance, and shorten the device lifetime.
(2) High junction temperatures degrade operating lifetimes. Operating lifetime is de-rated for junction temperatures greater than 125°C.

6.2 ESD Ratings

				VALUE	UNIT
$V_{(ESD)}$	Electrostatic discharge	Human body model (HBM), per AEC Q100-002(1)		±2000	V
		Charged device model (CDM), per AEC Q100-011	Corner pins	±750	
			Other pins	±500	

(1) AEC Q100-002 indicates that HBM stressing shall be in accordance with the ANSI/ESDA/JEDEC JS-001 specification.

6.3 Recommended Operating Conditions

over operating free-air temperature range (unless otherwise noted)(1)

		MIN	NOM	MAX	UNIT
Input pins	VS, CS1+, CS1–, DRN, CS2–, ISCP, TMP to GND	–60		95	V
Input pins	EN/UVLO, INP, $\overline{LPM}$	0		95	V
Input pins	IOC, TMR to GND, , TPS48120-Q1 only	0		5	V
Input pins	TMR to GND, TPS48121-Q1 only	0		5	V
Output pins	I2t, IMON, ITMPO to GND, TPS48120-Q1 only	0		5	V
Output pins	IMON, ITMPO to GND, TPS48121-Q1 only	0		5	V
Output pins	$\overline{FLT}$, WAKE, I_DIR to GND	0		15	V
External capacitor	VS, SRC to GND	22			nF

Copyright © 2024 Texas Instruments Incorporated

6.3 Recommended Operating Conditions (continued)

over operating free-air temperature range (unless otherwise noted)(1)

		MIN	NOM	MAX	UNIT
External capacitor	BST to SRC	0.1			µF
External capacitor	I2t to GND	10			nF
External capacitor	TMR to GND	1			nF
Tj	Operating junction temperature(2)	–40		150	°C

(1) Recommended Operating Conditions are conditions under which the device is intended to be functional. For specifications and test conditions, see Electrical Characteristics.
(2) High junction temperatures degrade operating lifetimes. Operating lifetime is de-rated for junction temperatures greater than 125°C.

6.4 Thermal Information

THERMAL METRIC(1)		TPS4812x-Q1 RGE (VQFN) 23 PINS	UNIT
$R_{\theta JA}$	Junction-to-ambient thermal resistance	43	°C/W
$R_{\theta JC(top)}$	Junction-to-case (top) thermal resistance	38.3	°C/W
$R_{\theta JB}$	Junction-to-board thermal resistance	20.8	°C/W
Ψ_{JT}	Junction-to-top characterization parameter	0.8	°C/W
Ψ_{JB}	Junction-to-board characterization parameter	20.7	°C/W

(1) For more information about traditional and new thermal metrics, see the Semiconductor and IC Package Thermal Metrics application report.

6.5 Electrical Characteristics

T_J = –40 °C to +125°C. $V_{(VS)}$ = 48 V, $V_{(BST-SRC)}$ = 12 V, $V_{(SRC)}$ = 0 V

PARAMETER		TEST CONDITIONS	MIN	TYP	MAX	UNIT
SUPPLY VOLTAGE (VS)						
VS	Operating input voltage		3.5		95	V
$V_{(S_PORR)}$	Input supply POR threshold, rising		2.06	2.6	3.12	V
$V_{(S_PORF)}$	Input supply POR threshold, falling		2	2.5	3.01	V
	Total System Quiescent current, $I_{(GND)}$	$V_{(EN/UVLO)}$ = $V_{(\overline{LPM})}$ = 2 V		430	525	µA
	Total System Quiescent current, $I_{(GND)}$	$V_{(EN/UVLO)}$ = $V_{(\overline{LPM})}$ = 2 V TPS48121-Q1 Only		370	470	µA
	Total System Quiescent current, $I_{(GND)}$	$V_{(EN/UVLO)}$ = 2V, $V_{(\overline{LPM})}$ = 0 V		20	24	µA
$I_{(SHDN)}$	SHDN current, $I_{(GND)}$	$V_{(SRC)}$ = 48 V, $V_{(EN/UVLO)}$ = 0 V, $V_{(SRC)}$ = 0 V		0.9	3.4	µA
$I_{(REV_VS)}$	$I_{(VS)}$ leakage current during Reverse Polarity	0 V ≤ $V_{(VS)}$ ≤ – 65 V			60	µA
$I_{(REV_SRC)}$	$I_{(SRC)}$ leakage current during Reverse Polarity	0 V ≤ $V_{(VS)}$ ≤ – 65 V			27	µA
ENABLE, UNDERVOLTAGE LOCKOUT (EN/UVLO) AND OVER VOLTAGE PROTECTION INPUT (OV)						
$V_{(UVLOR)}$	UVLO threshold voltage, rising		1.16	1.2	1.245	V
$V_{(UVLOF)}$	UVLO threshold voltage, falling		1.09	1.11	1.16	V
$V_{(ENR)}$	Enable threshold voltage for low Iq shutdown, rising				1	V
$V_{(ENF)}$	Enable threshold voltage for low Iq shutdown, falling		0.3			V
$I_{(EN/UVLO)}$	Enable input leakage current	$V_{(EN/UVLO)}$ = 48 V			500	nA

Copyright © 2024 Texas Instruments Incorporated

6.5 Electrical Characteristics (continued)

T_J = –40 °C to +125°C. $V_{(VS)}$ = 48 V, $V_{(BST-SRC)}$ = 12 V, $V_{(SRC)}$ = 0 V

PARAMETER		TEST CONDITIONS	MIN	TYP	MAX	UNIT
CHARGE PUMP (BST–SRC)						
$I_{(BST_LPM)}$	Charge Pump Supply current in LPM	$V_{(BST-SRC)}$ = 10 V, $V_{(EN/UVLO)}$ = 2 V, $V_{(\overline{LPM})}$ = 0 V	175	360	575	µA
$I_{(BST_AM)}$	Charge Pump Supply current in active mode	$V_{(BST-SRC)}$ = 12 V, $V_{(EN/UVLO)}$ = 2 V, $V_{(\overline{LPM})}$ = 2 V	300	540	775	µA
$V_{(BST\ UVLO)}$	$V_{(BST-SRC)}$ UVLO voltage threshold, rising	$V_{(EN/UVLO)}$ = 2 V	7	7.6	8.4	V
	$V_{(BST-SRC)}$ UVLO voltage threshold, falling	$V_{(EN/UVLO)}$ = 2 V	6	6.6	7.2	V
$VCP_{(AM_LOW)}$	Charge Pump Turn ON voltage in active mode	$V_{(EN/UVLO)}$ = 2 V, $V_{(\overline{LPM})}$ = 2 V	9.5	10.4	12.3	V
$VCP_{(AM_HIGH)}$	Charge Pump Turnoff voltage in active mode	$V_{(EN/UVLO)}$ = 2 V, $V_{(\overline{LPM})}$ = 2 V	10.42	11.3	13	V
$VCP_{(LPM_LOW)}$	Charge Pump Turn ON voltage in low power mode	$V_{(EN/UVLO)}$ = 2 V, $V_{(\overline{LPM})}$ = 0 V	8.3	9.3	10.6	V
$VCP_{(LPM_HIGH)}$	Charge Pump Turnoff voltage in low power mode	$V_{(EN/UVLO)}$ = 2 V, $V_{(\overline{LPM})}$ = 0 V	9.02	10.3	11.8	V
$VCP_{(VS_3V)}$	Charge Pump Voltage at $V_{(VS)}$ = 3 V	$V_{(EN/UVLO)}$ = 2 V	8			V
$V_{(G_GOOD)}$	G Drive Good rising threshold w.r.t BST when bypass comparator reference changes from 2 V to 200 mV			2.3		V
$I_{(SRC)}$	SRC pin leakage current	$V_{(EN/UVLO)}$ = 2 V, $V_{(INP)}$ = 0, $V_{(\overline{LPM})}$ = 2 V		1	1.57	µA
GATE DRIVER OUTPUTS (GATE, G)						
$I_{(GATE)}$	Peak Source Current			0.5		A
$I_{(GATE)}$	Peak Sink Current			2		A
$I_{(G)}$	Gate charge (sourcing) current, on state			100		µA
$I_{(G)}$	G Peak Sink Current			390		mA
CURRENT SENSE AND CURRENT MONITOR (CS1+, CS1–, IMON, I_DIR)						
$V_{(OS_SET)}$	Input referred offset (V_{SNS} to $V_{(IMON)}$ scaling)		-140		140	µV
$V_{(GE_SET)}$	Gain error (V_{SNS} to $V_{(IMON)}$ scaling)		–1		1	%
$V_{(IMON_Acc)}$	IMON accuracy	V_{SNS} = ±6 mV	–5		5	%
$V_{(IMON_Acc)}$	IMON accuracy	V_{SNS} = ±10 mV	–5		5	%
$V_{(IMON_Acc)}$	IMON accuracy	V_{SNS} = ±15 mV	–2		2	%
$V_{(IMON_Acc)}$	IMON accuracy	V_{SNS} = ±30 mV	–2		2	%
OVERCURRENT (I2t) AND SHORT CIRCUIT PROTECTION (IOC, I2t, ISCP, DRN)						
$V_{(OCP)}$	OCP threshold accuracy	15 mV ≥ $V_{(OCP)}$ ≥ 100 mV	–7.5		7.5	%
$I^2_{(I2t_Acc)}$	I^2 current accuracy on I2t pin	15 mV ≥ $V_{(OCP)}$ ≥ 100 mV V_{SNS} = $V_{(OCP)}$ + 50% of $V_{(OCP)}$	-15		15	%
$I^2_{(I2t_Acc)}$	I^2 current accuracy on I2t pin	15 mV ≥ $V_{(OCP)}$ ≥ 100 mV V_{SNS} = $V_{(OCP)}$ + 100% of $V_{(OCP)}$	-10		10	%
$I^2_{(I2t_Acc)}$	I^2 current accuracy on I2t pin	15 mV ≥ $V_{(OCP)}$ ≥ 100 mV V_{SNS} = $V_{(OCP)}$ + 200% of $V_{(OCP)}$	-10		10	%
$V_{(I2t_OC)}$	I2t pin voltage threshold for overcurrent shutdown		1.93	2	2.09	V
$I_{(I2t_Charge)}$	Charging current on I2t pin to $V_{(I2t_OFFSET)}$			5100		µA
$R_{(I2t_Discharge)}$	Internal switch discharge resistance			1200		Ω

Copyright © 2024 Texas Instruments Incorporated

6.5 Electrical Characteristics (continued)

T_J = –40 °C to +125°C. $V_{(VS)}$ = 48 V, $V_{(BST-SRC)}$ = 12 V, $V_{(SRC)}$ = 0 V

PARAMETER		TEST CONDITIONS	MIN	TYP	MAX	UNIT
$V_{(I2t_OFFSET)}$	I2t pin offset voltage		490	500	415	mV
$V_{(REF_OC)}$	IOC pin reference voltage		190	200	205	mV
$V_{(SCP)}$	SCP threshold accuracy	$V_{(SNS_SCP)}$ = 20 mV, $R_{(ISCP)}$ = 732 Ω	19	20	21	mV
$V_{(SCP)}$	SCP threshold accuracy	$V_{(SNS_SCP)}$ = 100 mV, $R_{(ISCP)}$ = 3.92 kΩ	95	100	105	mV
I_{SCP}	SCP Input Bias current		24.4	25	25.2	µA
LOAD WAKEUP COMPARATOR (CS2-, DRN)						
$V_{(LPM_SCP)}$	Short-circuit threshold in LPM		1.72	2	2.17	V
$V_{(LWU)}$	Load wakeup current threshold		177	200	218	mV
AUTO-RETRY OR LATCH-OFF TIMER (TMR)						
$I_{(TMR_SRC_FLT)}$	TMR source current		2	2.5	3	µA
$I_{(TMR_SNK)}$	TMR sink current		2	2.5	3	µA
$V_{(TMR_HIGH)}$	Voltage at TMR pin for AR counter rising threshold		1.04	1.23	1.42	V
$V_{(TMR_LOW)}$	Voltage at TMR pin for AR counter falling threshold		0.15	0.25	0.39	V
$N_{(A\text{-}R\ Count)}$				32		
TEMPERATURE MONITOR (CS1–, TMP, ITMPO)						
$V_{(REF_TMP)}$	Temperature amplifier internal reference voltage		475	500	525	mV
$V_{(ITMPO)}$	Temperature monitor output voltage at 150°C $R_{(NTC)}$ = 10 kΩ at 25°C	$R_{(TMP)}$ = 330 Ω, $R_{(NTC)}$ = 309 Ω at 150°C, $R_{(ITMPO)}$ = 2.55 kΩ	-6		6.64	%
$V_{(ITMPO)}$	Temperature monitor output voltage at 150°C $R_{(NTC)}$ = 47 kΩ at 25°C	$R_{(TMP)}$ = 1 kΩ, $R_{(NTC)}$ = 520 Ω at 150°C, $R_{(ITMPO)}$ = 6.19 kΩ	-6		6.67	%
$I_{(TMP)}$	TMP leakage current				100	nA
$V_{(TMP_OT)}$	Over temperature threshold		1.9	2	2.06	V
INPUT CONTROLS (INP, INP_G, $\overline{LPM}$), & FAULT FLAG ($\overline{FLT}$)						
$R_{(\overline{FLT})}$, $R_{(WAKE)}$, $R_{(I_DIR)}$	$\overline{FLT}$, WAKE, I_DIR Pull-down resistance			70		Ω
$I_{(\overline{FLT})}$, $I_{(WAKE)}$, $I_{(I_DIR)}$	$\overline{FLT}$, WAKE, I_DIR leakage current	0 V ≤ $V_{(\overline{FLT})}$ ≤ 20 V, 0 V ≤ $V_{(WAKE)}$ ≤ 20 V, 0 V ≤ $V_{(I_DIR)}$ ≤ 20 V			400	nA
$V_{(INP_H)}$, $V_{(\overline{LPM}_H)}$					2	V
$V_{(INP_L)}$, $V_{(\overline{LPM}_L)}$			0.72			V
$V_{(INP_Hys)}$, $V_{(\overline{LPM}_Hys)}$	INP, $\overline{LPM}$ Hysteresis			400		mV
$I_{(INP)}$, $I_{(\overline{LPM})}$	INP, $\overline{LPM}$ leakage current				200	nA

6.6 Switching Characteristics

T_J = –40 °C to +125°C. $V_{(VS)}$ = 48 V, $V_{(BST-SRC)}$ = 12 V, $V_{(SRC)}$ = 0 V

PARAMETER		TEST CONDITIONS	MIN	TYP	MAX	UNIT
$t_{GATE(INP_H)}$	INP Turn ON propogation Delay	INP ↑ to GATE ↑, $C_{L(GATE)}$ = 47 nF		1.2	2.5	µs
$t_{GATE(INP_L)}$	INP Turn OFF propogation Delay	INP ↓ to GATE ↓, $C_{L(GATE)}$ = 47 nF		0.35	1.5	µs
$t_{G_ON(\overline{LPM})}$	Active mode to LPM mode transition delay	$\overline{LPM}$ ↓ to G ↑, $C_{L(G)}$ = 1 nF		1.8	9	µs

Copyright © 2024 Texas Instruments Incorporated

6.6 Switching Characteristics (continued)

T_J = –40 °C to +125°C. $V_{(VS)}$ = 48 V, $V_{(BST-SRC)}$ = 12 V, $V_{(SRC)}$ = 0 V

PARAMETER		TEST CONDITIONS	MIN	TYP	MAX	UNIT
$t_{GATE_OFF(\overline{LPM})}$	Active mode to LPM mode transition delay	$\overline{LPM}$ ↓, G ↑ (above $V_{(G_GOOD)}$) to GATE ↓, WAKE ↑ (low to High Z) , $C_{L(GATE)}$ = 47 nF		37	51	µs
$t_{GATE(WAKE_\overline{LPM})}$	LPM Mode to Active mode transition delay with $\overline{LPM}$ trigger	$\overline{LPM}$ ↑ to GATE ↑, $C_{L(GATE)}$ = 47 nF		3.8	6	µs
$t_{G(WAKE_\overline{LPM})}$	LPM Mode to Active mode transition delay with $\overline{LPM}$ trigger	$\overline{LPM}$ ↑ , GATE ↑ (above $V_{(G_GOOD)}$) to G ↓, WAKE ↓ , $C_{L(G)}$ = 47 nF, $V_{(\overline{LPM})}$ = 0 V		9	15	µs
$t_{GATE(WAKE_LWU)}$	GATE turn ON propagation delay during Load wakeup	$V_{(DRN–CS2-)}$↑ $V_{(LWU)}$ to GATE ↑, $C_{L(GATE)}$ = 47 nF, $V_{(\overline{LPM})}$ = 0 V		4	5.5	µs
$t_{G(WAKE_LWU)}$	G turn OFF propagation delay during Load wakeup	$V_{(DRN–CS2-)}$↑ $V_{(LWU)}$, GATE ↑ (above $V_{(G_GOOD)}$) to G ↓, WAKE ↓ , $C_{L(G)}$ = 47 nF, $V_{(\overline{LPM})}$ = 0 V		9	15	µs
$t_{GATE(EN_OFF)}$	EN Turn OFF Propogation Delay	EN ↓ to GATE ↓, $C_{L(GATE)}$ = 47 nF, $\overline{LPM}$ = High		3.1	4.5	µs
$t_{GATE(UVLO_OFF)}$	UVLO Turn OFF Propogation Delay	UVLO ↓ to GATE ↓, $C_{L(GATE)}$ = 47 nF, $\overline{LPM}$ = High		4	6.5	µs
$t_{GATE(UVLO_ON)}$	UVLO to GATE Turn ON Propogation Delay with CBT pre-biased > VPORF and INP kept high	EN/UVLO ↑ to GATE ↑, $C_{L(GATE)}$ = 47 nF, INP = 2 V, , $\overline{LPM}$ = High		8.5	25	µs
$t_{GATE(VS_OFF)}$	GATE Turn OFF Propogation Delay with VS falling < VPORF and INP, EN/UVLO kept high	VS ↓ (cross VPORF) to GATE ↓, $C_{L(GATE)}$ = 47 nF, INP = EN/UVLO = 2V, $\overline{LPM}$ = High		25	40	µs
t_{SC}	Short Circuit Protection propogation Delay in Active Mode	$V_{(CS1+–CS1-)}$↑ $V_{(SCP)}$ to GATE ↓, $C_{L(GATE)}$ = 47 nF, $V_{(\overline{LPM})}$ = 2 V		3.9	5	µs
t_{LPM_SC}	Short Circuit Protection propogation Delay in LPM (Powerup into LPM with short)	$V_{(DRN–CS2-)}$ ↑ $V_{(LPM_SCP)}$ to GATE ↑, $C_{L(GATE)}$ = 47 nF, $V_{(\overline{LPM})}$ = 0 V		3.1	4.5	µs
$t_{GATE(\overline{FLT}_ASSERT)}$	$\overline{FLT}$ assertion delay during short circuit	$V_{(CS1+–CS1–)}$↑ $V_{(SCP)}$ to $\overline{FLT}$ ↓		15	21	µs
$t_{GATE(\overline{FLT}_DE_ASSERT)}$	$\overline{FLT}$ de-assertion delay during short circuit	$V_{(CS1+–CS1–)}$↓ $V_{(SCP)}$ to $\overline{FLT}$ ↑		3.8		µs
$t_{GATE(\overline{FLT}_ASSERT_BSTUVLO)}$	$\overline{FLT}$ assertion delay during GATE Drive UVLO	$V_{(GATE–SRC)}$ ↓ $V_{(BSTUVLOR)}$ to $\overline{FLT}$ ↓		30		µs
$t_{GATE(\overline{FLT}_DE_ASSERT_BSTUVLO)}$	$\overline{FLT}$ de-assertion delay during GATE Drive UVLO	$V_{(GATE–SRC)}$ ↑ $V_{(BSTUVLOR)}$ to $\overline{FLT}$ ↑		15		µs
$t_{(IDIR_DELAY)}$	Delay for current direction indication on I_DIR pin	$V_{(SNS)}$ ↑ or ↓ to $V_{(I_DIR)}$ ↑ or ↓		6.5	10	µs

Copyright © 2024 Texas Instruments Incorporated

6.7 Typical Characteristics

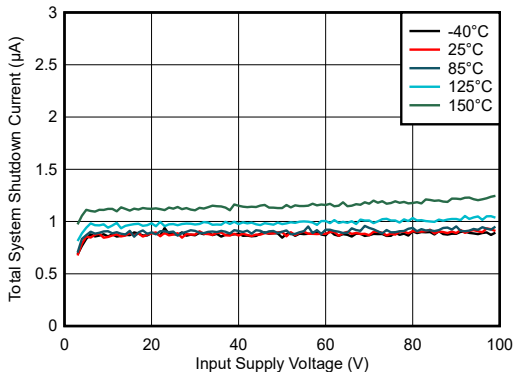

Figure 6-1. Shutdown Supply Current vs Supply Voltage

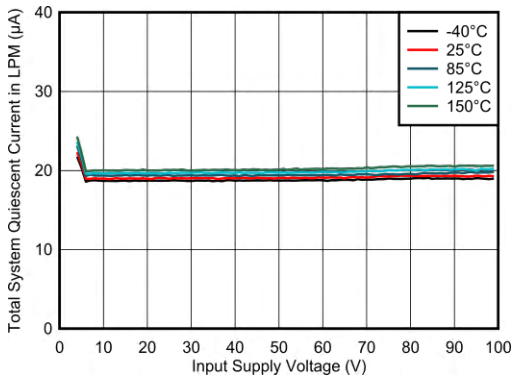

Figure 6-2. Operating Quiescent Current in LPM vs Supply Voltage

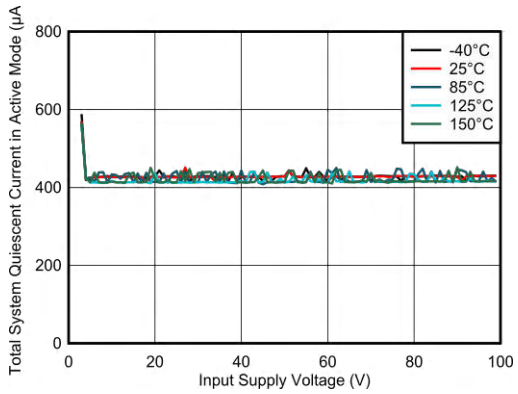

Figure 6-3. Operating Quiescent Current in Active Mode vs Supply Voltage

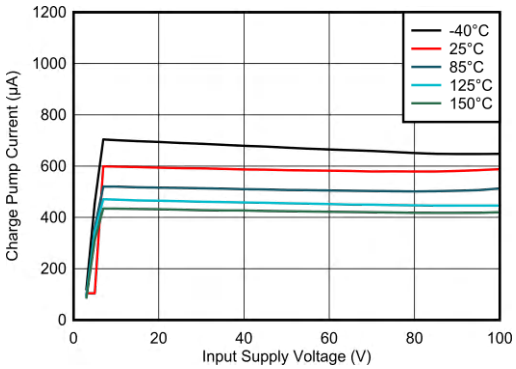

Figure 6-4. Charge Pump Current vs Supply Voltage

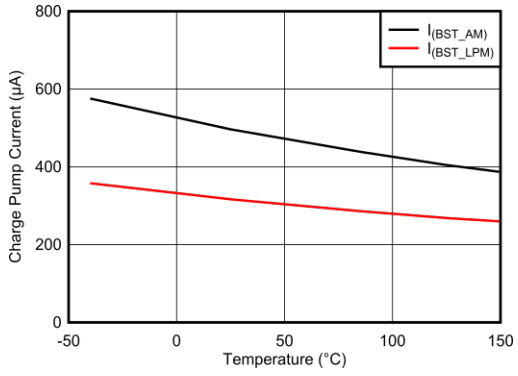

Figure 6-5. Charge Pump Current vs Temperature

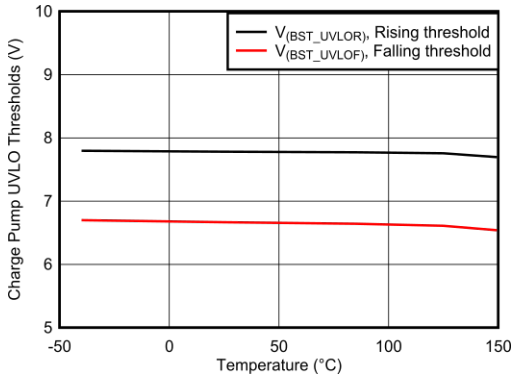

Figure 6-6. Charge Pump UVLO Thresholds vs Temperature

Copyright © 2024 Texas Instruments Incorporated

6.7 Typical Characteristics (continued)

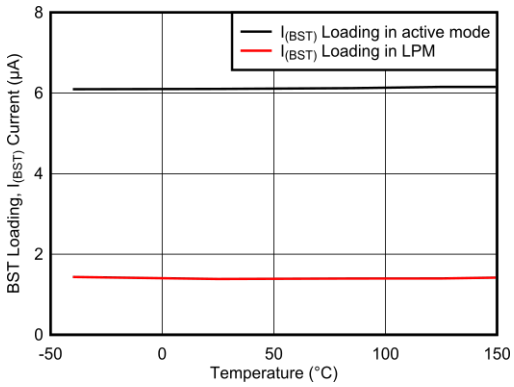

$V_{(BST)}$ = 15V $V_{(SRC)}$ = 0V

Figure 6-7. BST Loading Current ($I_{(BST)}$) vs Temperature

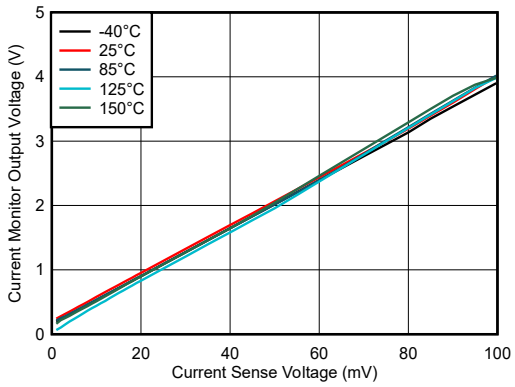

R_{IMON} = 5.6kΩ R_{SET} = 124Ω

Figure 6-8. Current Monitor Voltage ($V_{(IMON)}$) vs Sense Voltage (V_{SNS})

7 Parameter Measurement Information

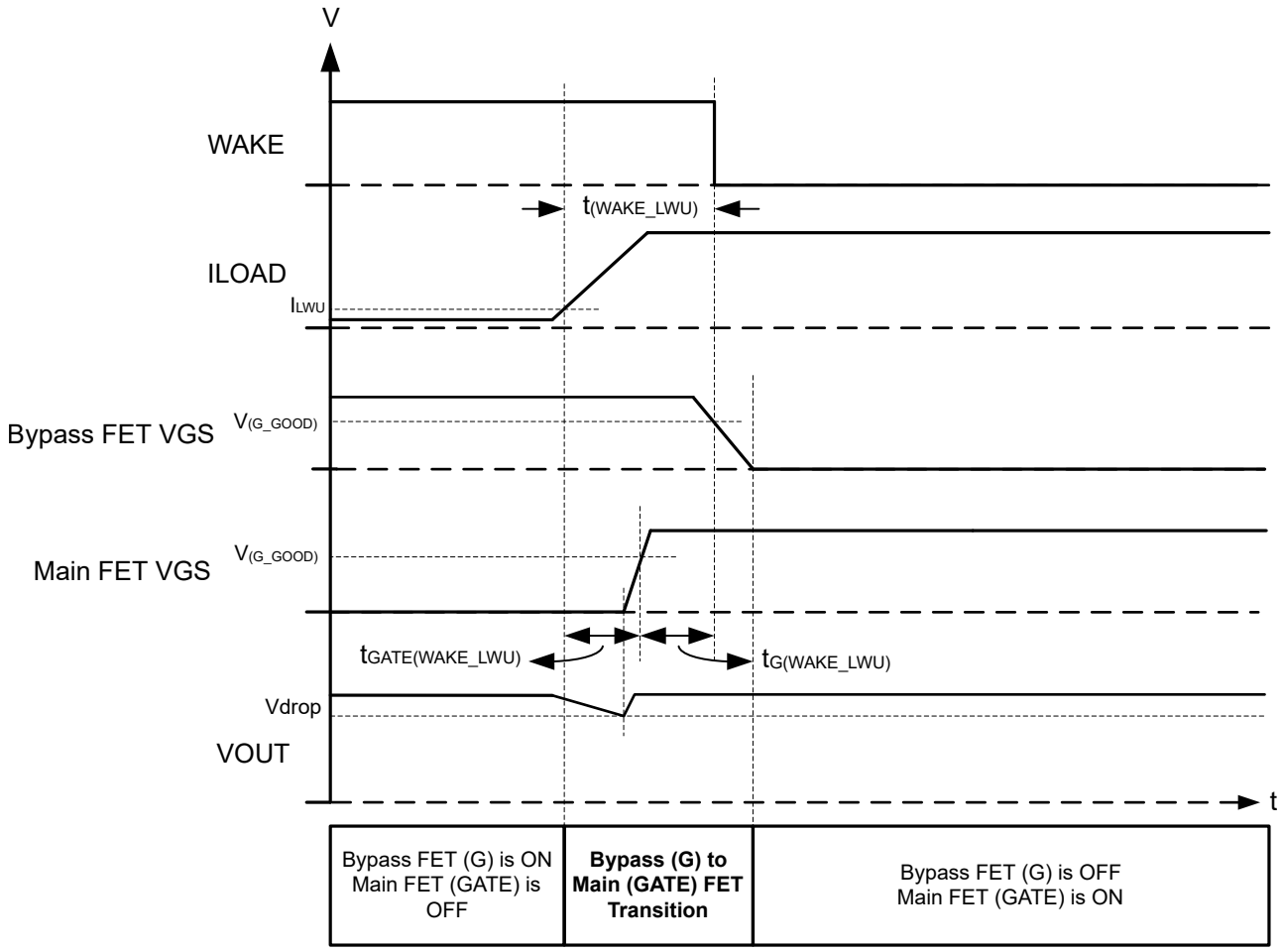

Figure 7-1. System Wake to Active Mode From Low Power Mode by Load Wakeup

Copyright © 2024 Texas Instruments Incorporated

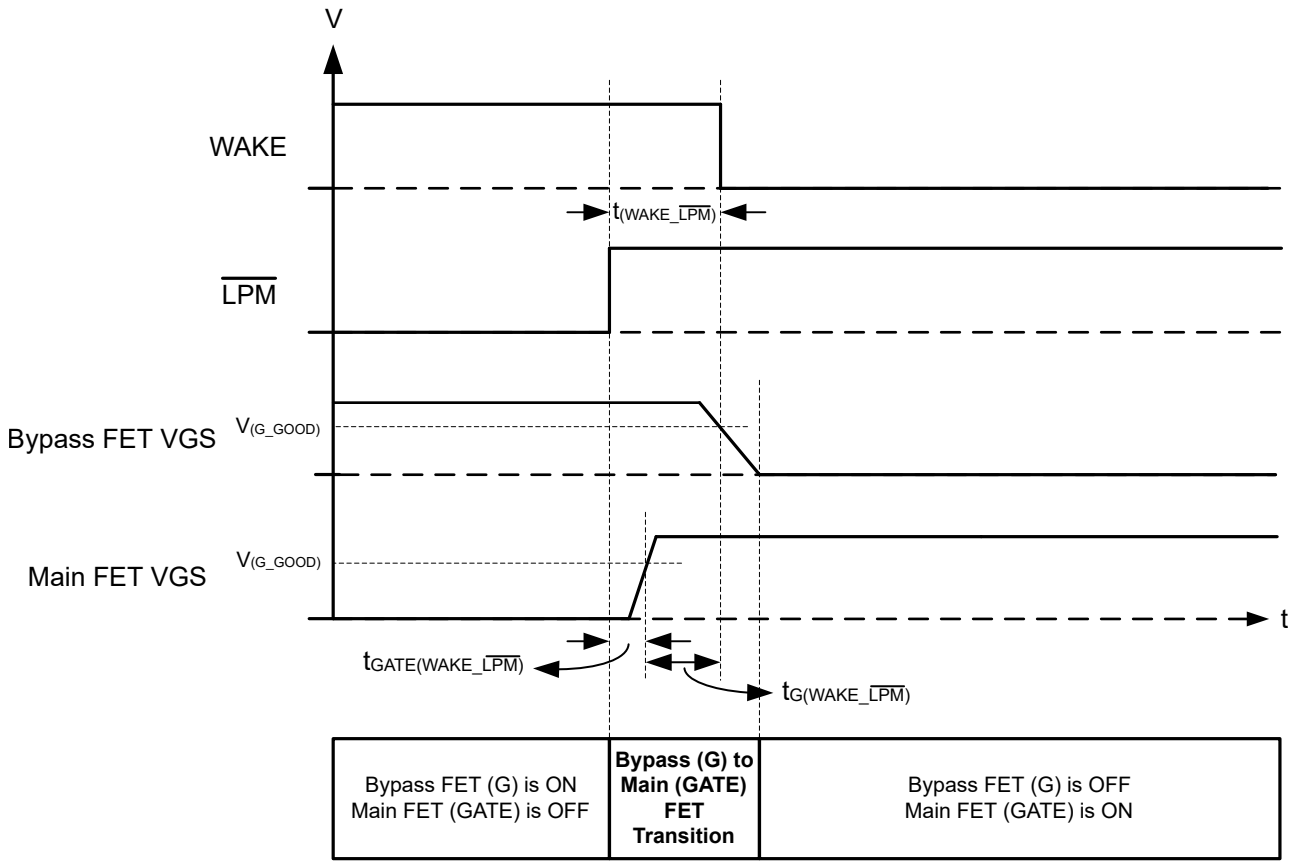

Figure 7-2. System Wake to Active Mode From Low Power Mode by $\overline{\text{LPM}}$ External Trigger

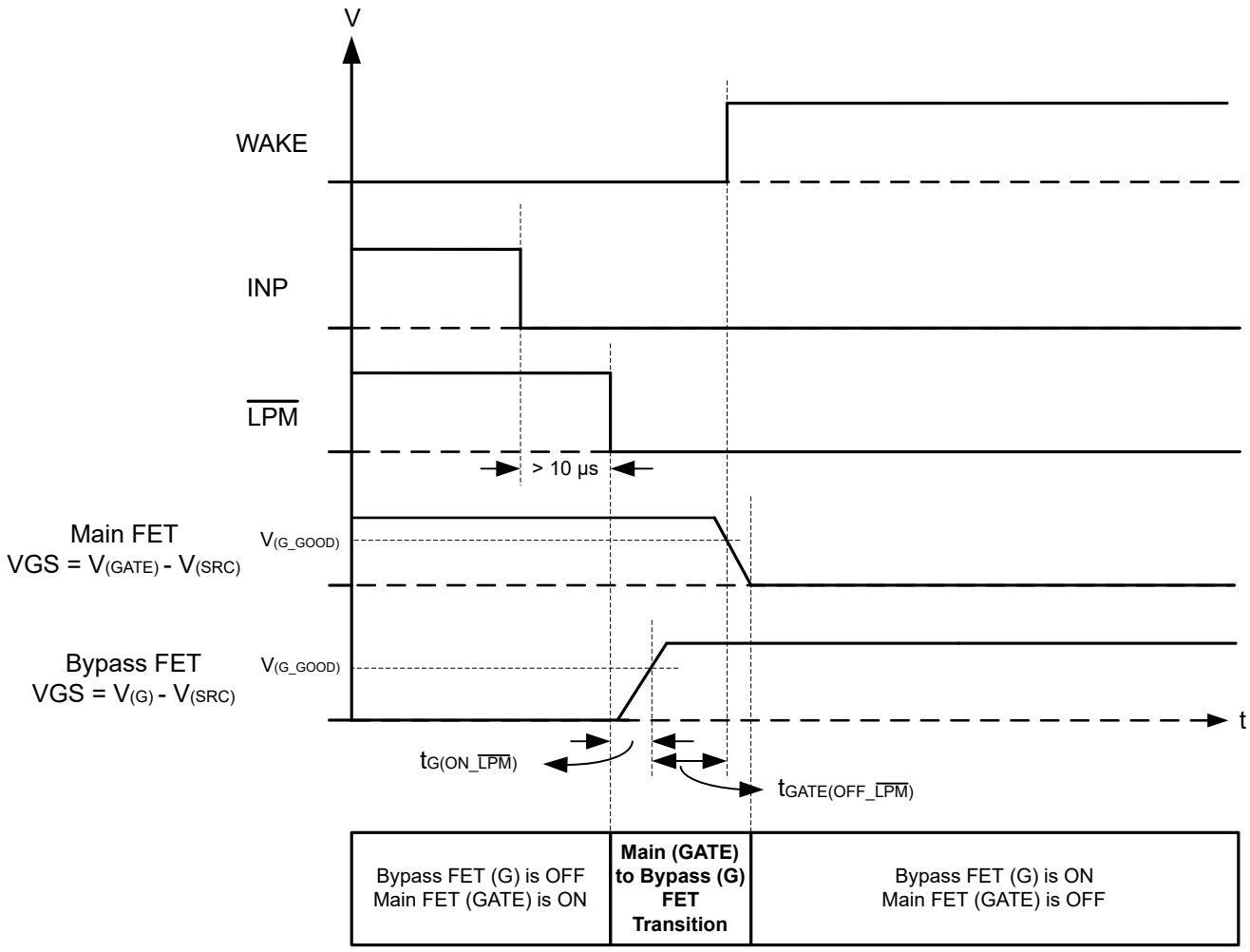

Figure 7-3. Active Mode to Low Power Mode by $\overline{\text{LPM}}$ Trigger

Copyright © 2024 Texas Instruments Incorporated

8 Detailed Description

8.1 Overview

TPS4812-Q1 is a family of low I_Q smart high side drivers with protection and diagnostics. The TPS4812-Q1 has wide operating voltage range of 3.5V to 95V and 100V absolute-maximum rating. The device is suitable for 12V, 24V, and 48V automotive system designs.

TPS4812-Q1 has two integrated gate drives with 0.5A peak source and 2A sink gate driver to drive FETs in main path and 100µA source and 0.39A sink capacity for the low power path. The strong gate drive (GATE) enables power switching using parallel FETs in high current system designs where INP pin can be used as the GATE control input.

In the low power mode with $\overline{\text{LPM}}$ = Low, the low power path FET (G drive) is kept ON and the main FETs (GATE drive) are turned OFF. The device consumes low I_Q of 20µA (typ) in this mode. Auto load wakeup threshold and output bulk capacitor charging current can be programmed using R_{BYPASS} resistor placed across DRN and CS2– pins in low power path. I_Q reduces to 1µA (typical) with EN/UVLO pulled low. The device features WAKE output pin to indicate the mode of operation (Active/Low power mode).

The device has accurate current sensing (±2% at 30mV VSNS) output (IMON) enabling systems for energy management. The device has integrated accurate and adjustable I^2t based overcurrent and short circuit protection by using an external R_{SNS} resistor. Auto-retry and latch-off fault behavior can be configured.

TPS4812-Q1 indicate fault on open drain $\overline{\text{FLT}}$ output during overcurrent, short circuit, charge pump under voltage and external FET overtemperature conditions.

TPS4812-Q1 has integrated reverse polarity protection down to –65V and do not need any external components to protect the ICs during an input reverse polarity fault.

The device features NTC based temperature sensing (TMP) and monitor output (ITMPO) output to sense overtemperature of external FETs enabling robust thermal system designs.

The TPS4812x-Q1 is available in a 23-pin QFN package.

Copyright © 2024 Texas Instruments Incorporated

8.2 Functional Block Diagram

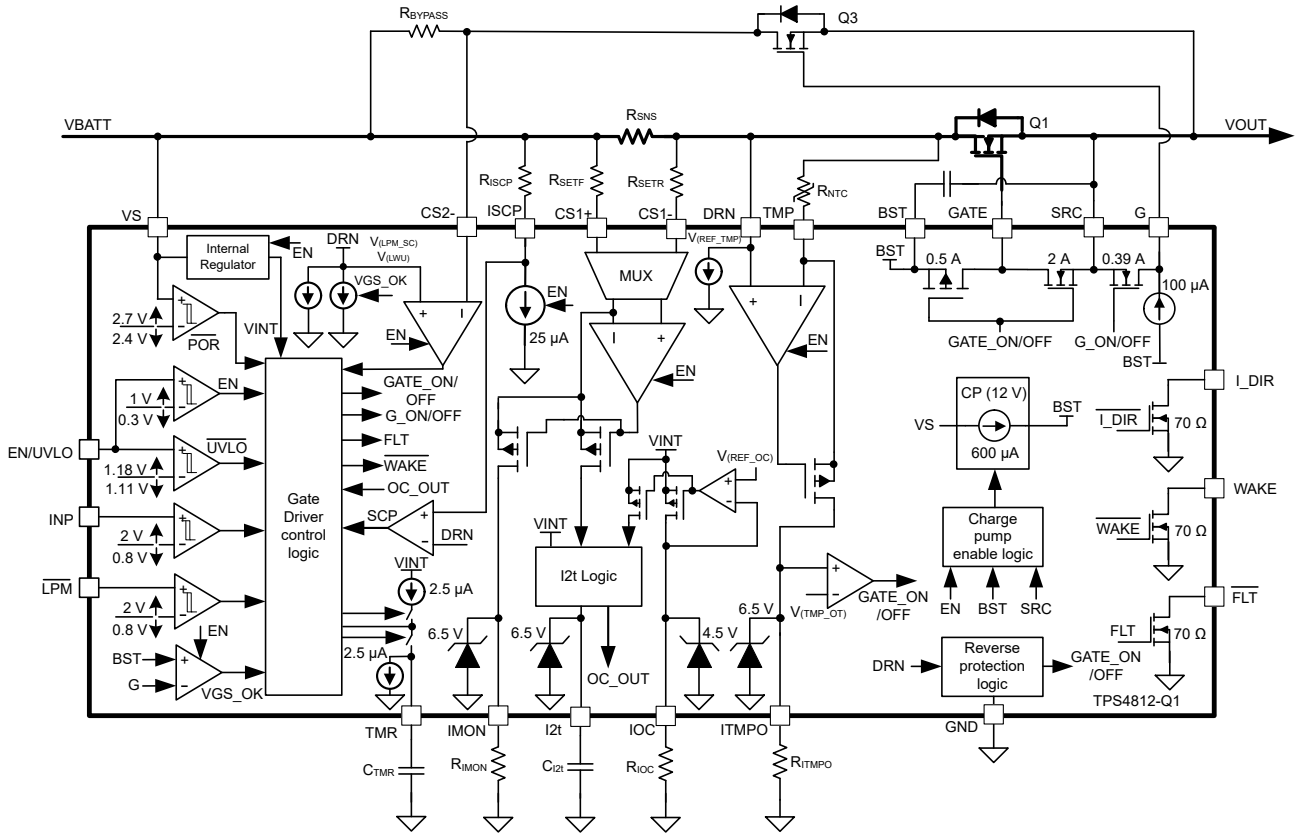

Copyright © 2024 Texas Instruments Incorporated

8.3 Feature Description

8.3.1 Charge Pump and Gate Driver Output (VS, GATE, BST, SRC)

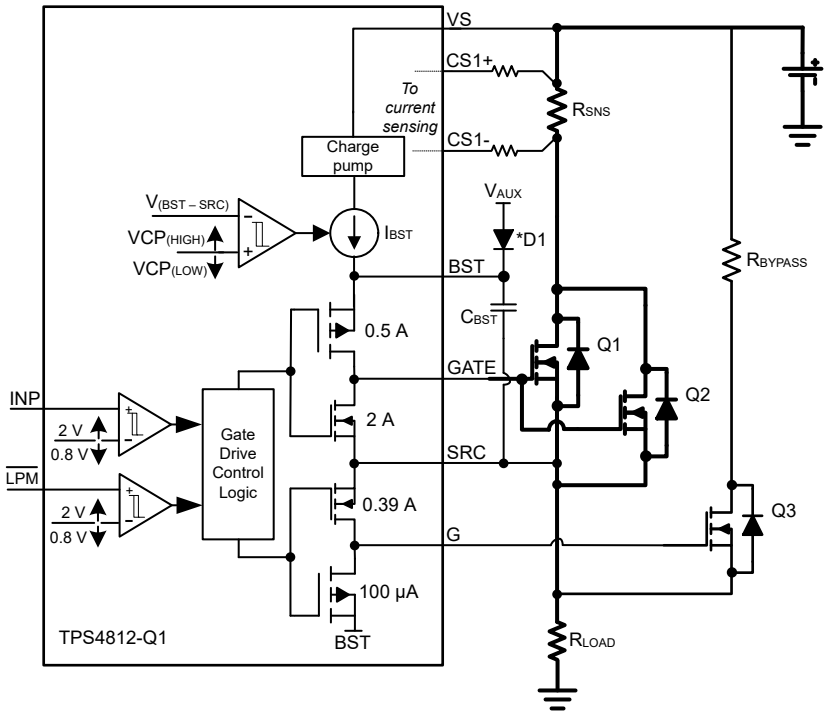

Figure 8-1. Gate Driver

Figure 8-1 shows a simplified diagram of the charge pump and gate driver circuit implementation. The device houses a strong 0.5A/2A peak source/sink gate driver (GATE) for main FETs Q1, Q2, and 100µA/0.39A peak source/sink current gate driver (G) for bypass FET Q3. The strong gate drivers enable paralleling of FETs in high power system designs ensuring minimum transition time in saturation region. A 12V in active mode, 600µA charge pump is derived from VS terminal and charges the external boot-strap capacitor, C_{BST} that is placed across the gate driver (BST and SRC).

VS is the supply pin to the controller. With VS applied and EN/UVLO pulled high, the charge pump turns ON and charges the C_{BST} capacitor. After the voltage across C_{BST} crosses $V_{(BST_UVLOR)}$, the GATE driver section is activated. The device has a 1V (typical) UVLO hysteresis to ensure chattering less performance during initial GATE turn ON. Choose C_{BST} based on the external FET Q_G and allowed dip during FET turn ON. In active mode, the charge pump remains enabled until the BST to SRC voltage reaches $VCP_{(HIGH_AM)}$, typically, at which point the charge pump is disabled decreasing the current draw on the VS pin. The charge pump remains disabled until the BST to SRC voltage discharges to $VCP_{(LOW_AM)}$ typically at which point the charge pump is enabled.

The voltage between BST and SRC continue to charge and discharge between $VCP_{(HIGH_AM)}$ and $VCP_{(LOW_AM)}$ in active mode as shown in Figure 8-2:

Copyright © 2024 Texas Instruments Incorporated

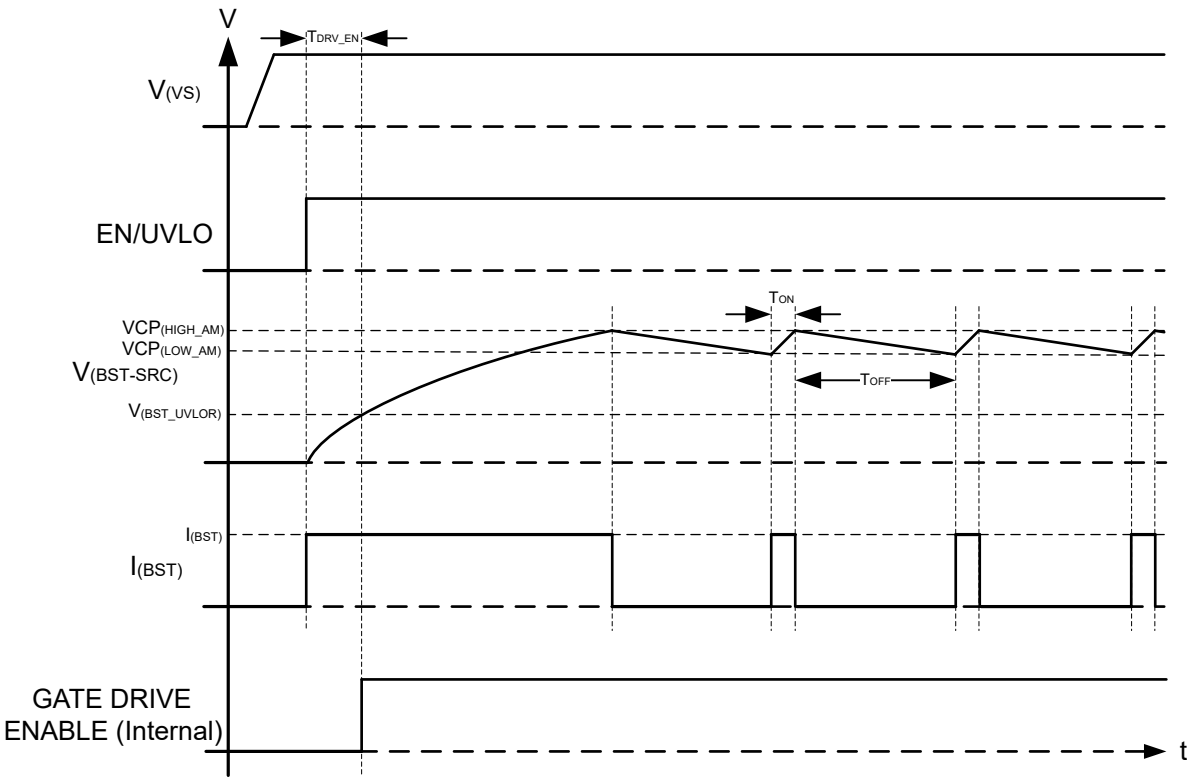

Figure 8-2. Charge Pump Operation

Use Equation 1 to calculate the initial gate driver enable delay:

$$T_{DRV_EN} = \frac{C_{BST} \times V_{(BST_UVLOR)}}{600\ \mu A} \quad (1)$$

Where,

C_{BST} is the charge pump capacitance connected across BST and SRC pins.

$V_{(BST_UVLOR)}$ = 7.6V (typ).

If T_{DRV_EN} needs to be reduced then pre-bias BST terminal externally using an external VAUX or input supply through a low leakage diode D1 as shown in Figure 8-3. With this connection, T_{DRV_EN} reduces to 350µs.

Copyright © 2024 Texas Instruments Incorporated

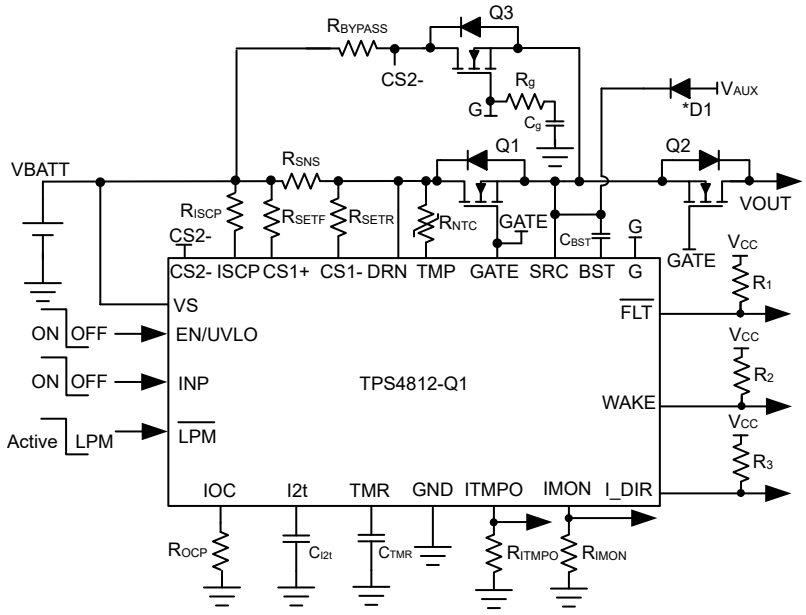

Figure 8-3. TPS4812-Q1 Application Circuit With External Supply to BST

Note

V_{AUX} can be supplied by external supply ranging between 8.1V and 15V. Input supply VS can also be connected to BST via D1 diode for reducing T_{DRV_EN}.

8.3.2 Capacitive Load Driving

Certain end equipment like automotive power distribution unit and zonal controller power different loads including other ECUs. These ECUs can have large input capacitances. If power to the ECUs is switched on in uncontrolled way, large inrush currents can occur and potentially damaging the power FETs.

To limit the inrush current during capacitive load switching, the following system design techniques can be used with TPS4812-Q1 device.

8.3.2.1 Using Low-Power Bypass FET (G Drive) for Load Capacitor Charging

In high-current applications where several FETs are connected in parallel, the gate slew rate control for the main FETs is not recommended due to unequal distribution of inrush currents among the FETs resulting in over sizing of the FETs.

The TPS4812-Q1 integrates gate driver (G) with a dedicated control input ($\overline{LPM}$) and bypass comparator between DRN and CS2– pins. This feature can be used to drive a separate low power bypass FET and pre-charge the capacitive load with inrush current limiting. Figure 8-4 shows the low power bypass FET implementation for capacitive load charging using TPS4812-Q1. An external capacitor C_g reduces the gate turn ON slew rate and controls the inrush current.

Copyright © 2024 Texas Instruments Incorporated

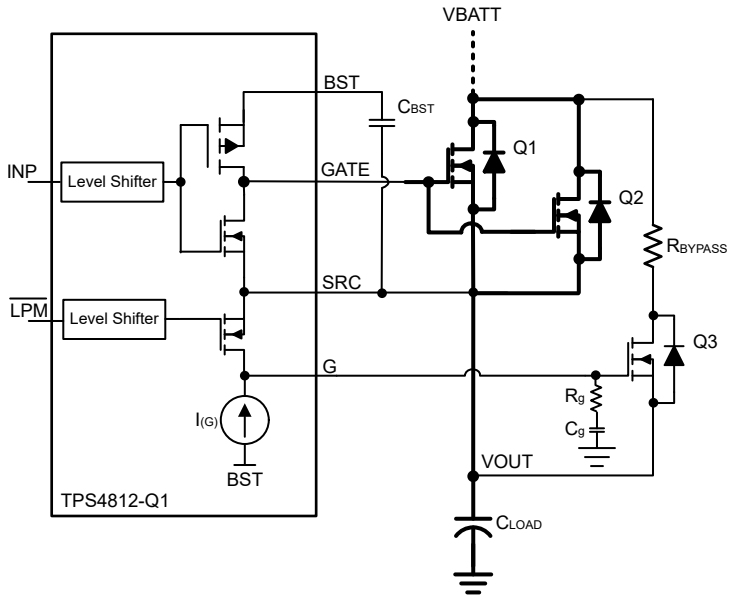

Figure 8-4. Capacitor Charging Using Gate (G) Slew Rate Control of Low-Power Bypass FET

During power-up with EN/UVLO pulled high and $\overline{\text{LPM}}$ pulled low, the device turns ON bypass FET (G) by pulling G high with 100µA of source current and the main FETs (GATE) is kept OFF. In this low power mode (LPM), TPS4812-Q1 senses voltage between DRN and CS2– pins along with VGS of bypass FET (G to SRC). The voltage across DRN and CS2– is compared initially with $V_{(LPM_SCP)}$ threshold (2V typical) to detect powerup into short fault event until $V_{(G_GOOD)}$ threshold is reached.

After $V_{(G_GOOD)}$ threshold is reached, the voltage between DRN and CS2– is compared against $V_{(LWU)}$ threshold (200mV typ) for load wakeup event. With this scheme capacitor charging current (I_{INRUSH}) can be set at higher than load wakeup threshold (I_{LWU}) and power-up into short event can also be detected reliably as shown in Figure 8-5.

Copyright © 2024 Texas Instruments Incorporated

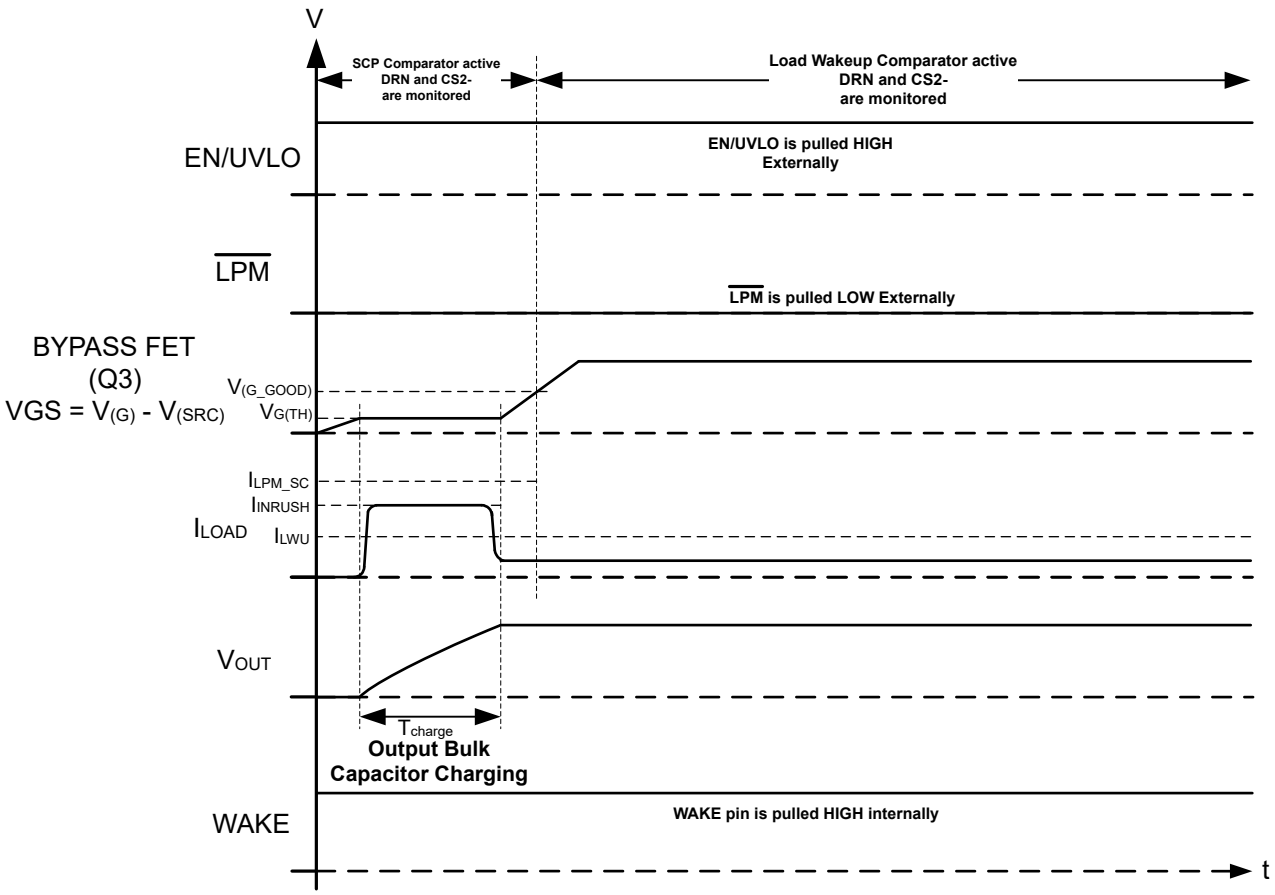

Figure 8-5. Timing Diagram for Bulk Capacitor Charging Using Bypass Path

Setting the Load Wakeup Trigger Threshold:

During normal operation, the series resistor R_{BYPASS} is used to set load wakeup current threshold. After $V_{(G_GOOD)}$ threshold is reached, the voltage between DRN and CS2– is compared against $V_{(LWU)}$ threshold (200mV typ) for load wakeup event.

RBYPASS can be selected using Equation 2:

$$R_{BYPASS} = \frac{V_{(LWU)}}{I_{LWU}} \quad (2)$$

Setting the INRUSH Current:

Use Equation 3 to calculate the I_{INRUSH}:

$$I_{INRUSH} = C_{LOAD} \times \frac{V_{BATT}}{T_{charge}} \quad (3)$$

Where,

C_{LOAD} is the load capacitance.

V_{BATT} is the input voltage and T_{charge} is the charge time.

I_{INRUSH} should be always less than wakeup in short in low power mode (I_{LPM_SC}) current which can be calculated using Equation 4:

Copyright © 2024 Texas Instruments Incorporated

$$I_{LPM_SC} = \frac{V_{(LPM_SCP)}}{R_{BYPASS}} \quad (4)$$

Use Equation 5 to calculate the required C_g value.

$$C_g = \frac{C_{LOAD} \times I_{(G)}}{I_{INRUSH}} \quad (5)$$

Where,

$I_{(G)}$ is 100µA (typical),

A series resistor R_g must be used in conjunction with C_g to limit the discharge current from C_g during turn-off. The recommended value for Rg is between 220Ω to 470Ω.

After the output capacitor is charged, main FETs can be controlled (GATE drive) and bypass FET (G drive) can be turned OFF by driving $\overline{LPM}$ high externally. The main FETs (G drive) can now be turned ON by driving INP high.

Figure 8-6 shows application circuit to charge large output capacitors using low power bypass path in high current applications.

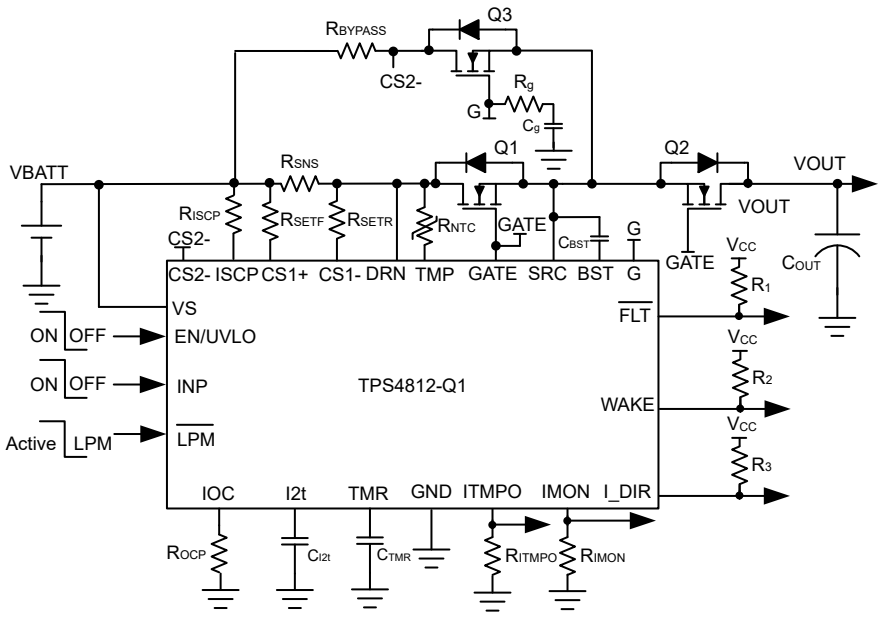

Figure 8-6. TPS4812-Q1 Application Circuit for Capacitive Load Driving Using Low-Power Bypass FET (Q_3) and Series Resistor (R_{BYPASS})

8.3.2.2 Using Main FET (GATE Drive) Gate Slew Rate Control

In the applications where low power bypass path is not used, the cap charging can be done using main FET GATE drive control.

For limiting inrush current during turn-ON of the main FET with capacitive loads, use R_1, R_2, C_1, and D_2 as shown in Figure 8-7. The R_1 and C_1 components slow down the voltage ramp rate at the gate of main FET. The FET source follows the gate voltage resulting in a controlled voltage ramp across the output capacitors.

Copyright © 2024 Texas Instruments Incorporated

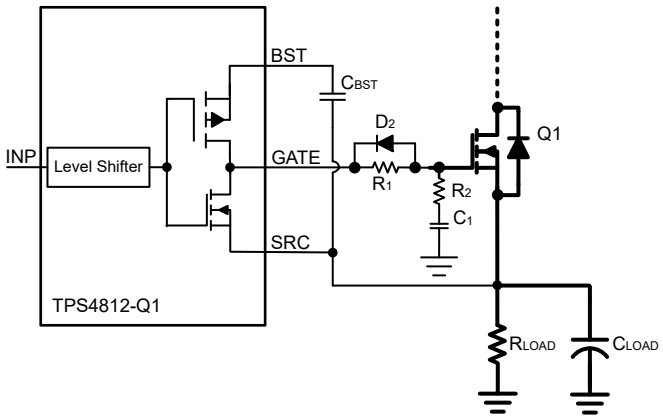

Figure 8-7. Inrush Current Limiting in Main Path

Use the Equation 6 to calculate the inrush current during turn-ON of the FET.

$$I_{INRUSH} = C_{LOAD} \times \frac{V_{BATT}}{T_{charge}} \quad (6)$$

$$C_1 = \frac{0.63 \times V_{(BST\ -\ SRC)} \times C_{LOAD}}{R_1 \times I_{INRUSH}} \quad (7)$$

Where,

C_{LOAD} is the load capacitance.

VBATT is the input voltage and T_{charge} is the charge time.

$V_{(BST\text{-}SRC)}$ is the charge pump voltage (12V).

Use a damping resistor R_2 (~10Ω) in series with C_1. Equation 8 can be used to compute required C_1 value for a target inrush current. A 100kΩ resistor for R_1 can be a good starting point for calculations.

D_2 ensures fast turn OFF of GATE drive by bypassing R_1.

C_1 results in an additional loading on C_{BST} to charge during turn-ON. Use Equation 8 to calculate the required C_{BST} value:

$$C_{BST} = \frac{Q_{g(total)}}{\Delta V_{BST}} + 10 \times C_1 \quad (8)$$

Where,

$Q_{g(total)}$ is the total gate charge of the FET.

ΔV_{BST} (1V typical) is the ripple voltage across BST to SRC pins.

Copyright © 2024 Texas Instruments Incorporated

8.3.3 Overcurrent and Short-Circuit Protection

TPS4812-Q1 features integrated accurate I^2t functionality for the implementation of a robust and flexible overcurrent protection mechanism. This I^2t functionality features an intelligent circuit breaking aimed at protecting PCB traces, connectors and wire harness from overheating, with no impact on load transients like inrush currents and bulk capacitor charging.

The device also features accurate and configurable short-circuit protection threshold (I_{SC}) with fixed response time (t_{SC} = 5us max).

Figure 8-8 shows the overall current-time characteristics.

- Configurable I^2t based overcurrent protection (I_{OC}) threshold and adjustable response time (t_{OC} and t_{OC_MIN})
- Adjustable short-circuit threshold (I_{SC}) with internally fixed fast response (t_{SC})

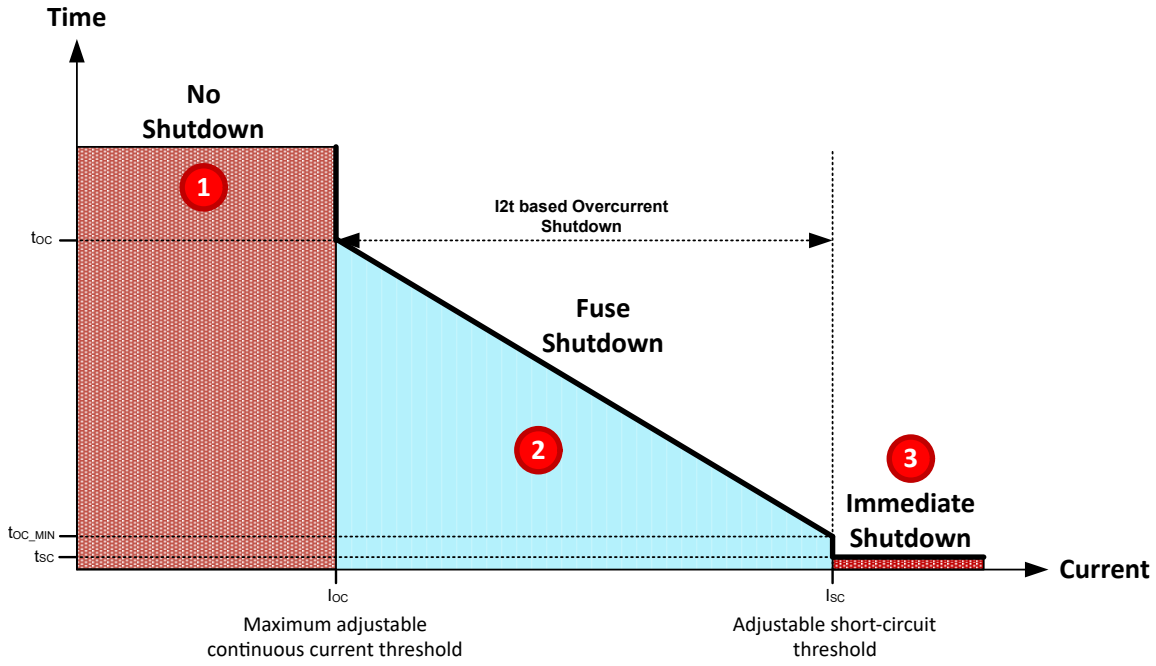

Figure 8-8. Configurable Current vs Time characteristics curve for TPS4812-Q1

Copyright © 2024 Texas Instruments Incorporated

8.3.3.1 I^2t-Based Overcurrent Protection

The I^2t profile for TPS4812-Q1 is set by two parameters which are I^2t start overcurrent threshold, I_{OC} and I^2t ampere squared second factor (melting point or breaking point). The overcurrent protection time t_{OC} is determined based on set I^2t factor when load current is higher than set I_{OC} threshold.

Setting I^2t Protection Starting Threshold, R_{IOC}

The I^2t protection starting threshold I_{OC} is set using an external resistor R_{IOC} across IOC and GND pins.

Use Equation 9 to calculate the required R_{IOC} value:

$$R_{IOC}\left(\Omega\right) = \frac{V_{(REF_OC)}}{K \times \left(I_{OC}\right)^2} \tag{9}$$

Where,

$V_{(REF_OC)}$ is internal reference voltage of 200mV.

I_{OC} is the overcurrent level.

The scaling factor, K can be calculated by Equation 10:

$$\text{Scaling factor}\left(K\right) = \frac{\left(0.1 \times \frac{R_{SNS}}{R_{SET}}\right)^2}{I_{BIAS}} \tag{10}$$

Where,

I_{BIAS} is internal reference current of 5µA.

R_{SET} is the resistor connected across CS1+ and input battery supply.

R_{SNS} is the current sense resistor.

Setting I^2t Profile, C_{I2t}

The device senses the voltage across the external current sense resistor (R_{SNS}) through CS1+ and CS1–. When sensed voltage across R_{SNS} exceeds I_{OC} threshold set by R_{IOC} resistor, C_{I2t} capacitor starts charging with current proportional to $I_{LOAD}{}^2 – I_{OC}{}^2$ current.

The time to turn OFF the gate drive at maximum overcurrent limit (I_{OC_MAX}) can be determined using Equation 11:

$$t_{OC_MIN}\left(s\right) = \frac{\text{I2T factor}}{I_{OC_MAX} \times I_{OC_MAX}} \tag{11}$$

Note

The maximum overcurrent limit (I_{OC_MAX}) can 5% to 10% below short-circuit protection threshold (I_{SC}).

Use Equation 12 to calculate the required C_{I2t} value.

$$C_{I2t}\left(F\right) = \frac{K \times t_{OC_MIN}}{V_{(I2t_OC)} - V_{(I2t_OFFSET)}} \times \left[I_{OC_MAX}{}^2 - I_{OC}{}^2\right] \tag{12}$$

Where,

$V_{(I2t_OC)}$ is I^2t trip threshold voltage of 2V (typ).

$V_{(I2t_OFFSET)}$ is offset voltage of 500mV (typ) on I2t pin during normal operation.

t_{OC_MIN} is the desired overcurrent response time at maximum overcurrent threshold I_{OC_MAX}.

Copyright © 2024 Texas Instruments Incorporated

8.3.3.1.1 I^2t-Based Overcurrent Protection With Auto-Retry

The C_{I2t} programs the over current protection delay (t_{OC_MIN}) and C_{TMR} programs auto-retry time (t_{RETRY}). Once the voltage across CS1+ and CS1– exceeds the set point ($V_{(OCP)}$), the C_{I2t} capacitor starts charging with current proportional to $I_{LOAD}{}^2 – I_{OC}{}^2$ current.

After C_{I2t} charges to $V_{(I2t_OC)}$, GATE pulls low to SRC turning OFF the main FET and $\overline{FLT}$ assets low as same time. Post this event, the auto-retry behavior starts. The C_{TMR} starts charging with 2.5µA pullup current till voltage reaches $V_{(TMR_HIGH)}$ level. After this level, capacitor starts discharging with 2.5µA pulldown current.

After the voltage reaches $V_{(TMR_LOW)}$ level, the capacitor starts charging again with 2.5µA pullup. After 32 charging-discharging cycles of C_{TMR} the FET turns ON back and $\overline{FLT}$ de-asserts after de-assertion delay.

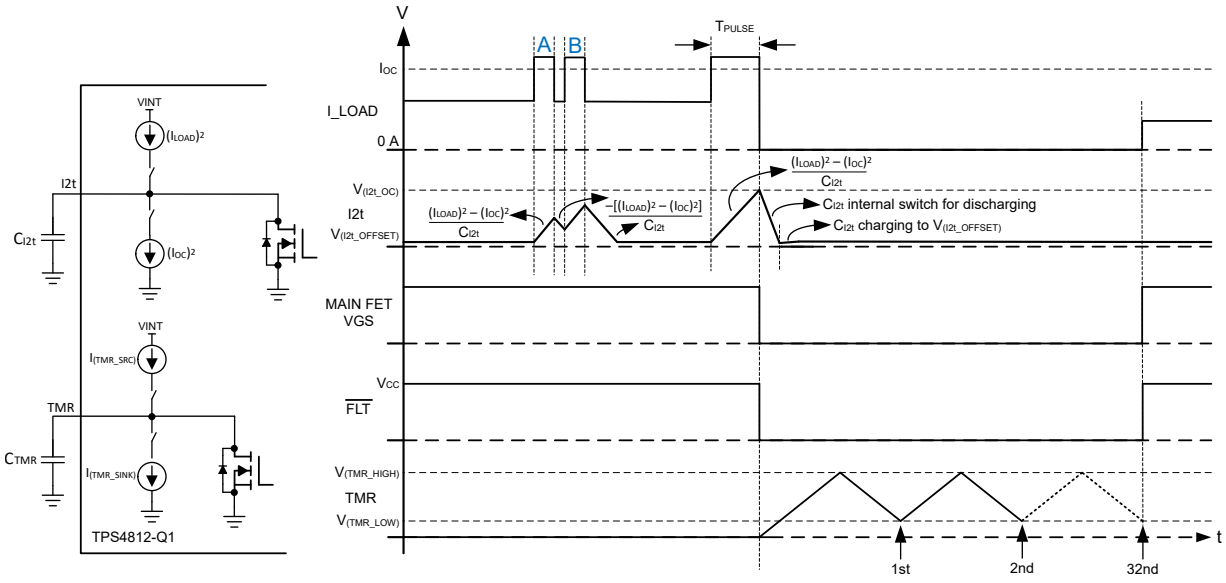

Figure 8-9. I^2t-Based Overcurrent Protection With Auto-Retry

The auto-retry time can be set by CTMR capacitor to be connected across TMR and GND pins as per Equation 13.

$$t_{RETRY}\left(s\right) = 64 \times C_{TMR} \times \left[\frac{V_{(TMR_HIGH)} - V_{(TMR_LOW)}}{I_{(TMR_SRC)}}\right] \quad (13)$$

where

$V_{(TMR_HIGH)}$ is 1.2V (typ) and $V_{(TMR_LOW)}$ is 0.2V (typ).

$I_{(TMR_SRC)}$ is internal source current on TMR pin with 2.5µA (typ) value.

Copyright © 2024 Texas Instruments Incorporated

8.3.3.1.2 I^2t-Based Overcurrent Protection With Latch-Off

Connect 100kΩ resistor across TMR pin to GND for latch-off configuration.

Latch is reset on falling edge of INP or $\overline{\text{LPM}}$ going low or EN/UVLO (below $V_{(ENF)}$) or power cycle VS below $V_{(VS_PORF)}$. At low edge, the timer counter is reset and C_{TMR} is discharged. GATE pulls up to BST when INP is pulled high.

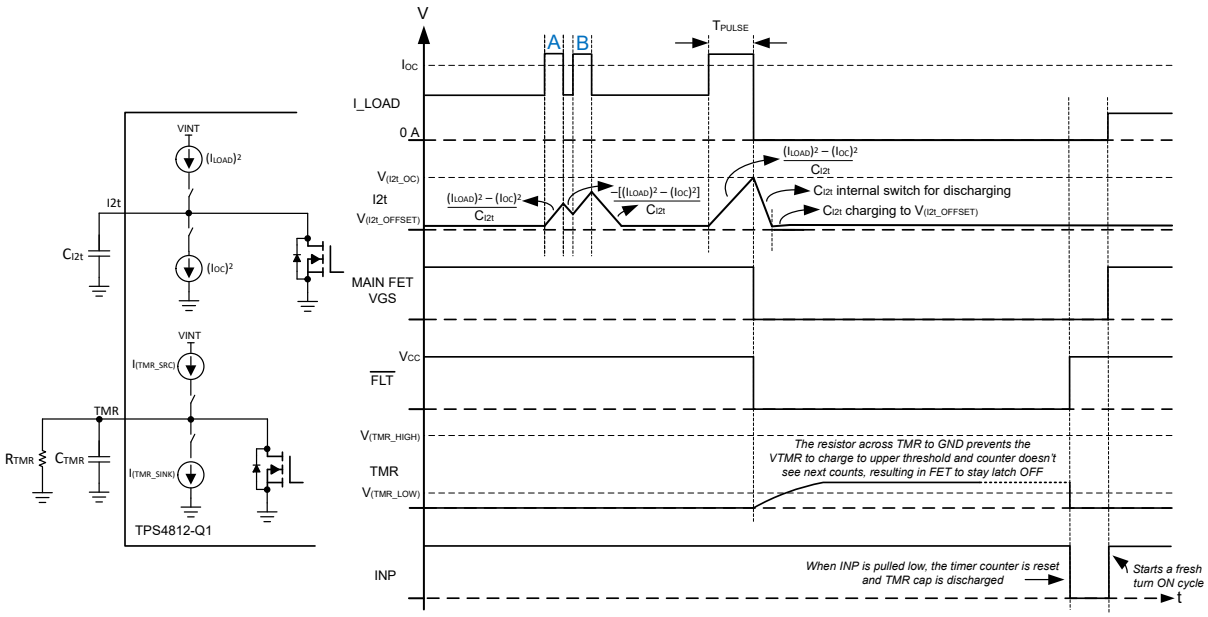

Figure 8-10. I^2t-Based Overcurrent Protection With Latch-Off

8.3.3.2 Short-Circuit Protection

The short-circuit current threshold (I_{SC}) can be set R_{ISCP} resistor. Use Equation 14 to calculate the required R_{ISCP} value.

$$R_{ISCP}\left(k\Omega\right) = \frac{I_{SC} \times R_{SNS} - 1.8}{I_{SCP}} \tag{14}$$

where

I_{SC} is the short-circuit current threshold in Ampere.

R_{SNS} is external current sense resistor in miliohms.

I_{SCP} is the internal reference current of 25µA.

When the load current exceeds the I_{SC} threshold then, GATE pulls low to SRC within 5µs (max) in TPS4812-Q1, protecting the main path FETs and $\overline{\text{FLT}}$ asserts low at the same time. Subsequent to this event, the charge and discharge cycles of C_{TMR} starts similar to the behavior post FET OFF event in the overcurrent protection scheme.

Latch-off can also achieved in the similar way as explained in the overcurrent protection scheme.

8.3.4 Analog Current Monitor Output (IMON)

TPS4812-Q1 features an accurate analog load current monitor output (IMON) with adjustable gain (ON in active mode and load wakeup only). The current source at IMON terminal is configured to be proportional to the current

Copyright © 2024 Texas Instruments Incorporated

flowing through the R_{SNS} current sense resistor. This current can be converted to a voltage using a resistor R_{IMON} from IMON terminal to GND pins.

This voltage, computed using following equation, can be used as a means of monitoring current flow through the system.

Use Equation 15 to calculate the $V_{(IMON)}$ for TPS48120-Q1 variant with I^2t enabled.

$$V_{(IMON)} = \left(V_{SNS} + V_{(VOS_SET)}\right) \times \frac{0.9 \times R_{IMON}}{R_{SET}} \quad (15)$$

Use Equation 16 to calculate the $V_{(IMON)}$ for TPS48121-Q1 variant with I^2t disabled.

$$V_{(IMON)} = \left(V_{SNS} + V_{(VOS_SET)}\right) \times \frac{R_{IMON}}{R_{SET}} \quad (16)$$

Where,

$V_{SNS} = I_{LOAD} \times R_{SNS}$,

$V_{(OS_SET)}$ is the input referred offset (±140µV) of the current sense amplifier (V_{SNS} to $V_{(IMON)}$ scaling),

0.9 is the current mirror factor between the current sense amplifier and the IMON pass FET.

The maximum voltage range for monitoring the current ($V_{(IMONmax)}$) is limited to minimum([$V_{(VS)}$ – 0.5V], 5.5V)

to ensure linear output. This puts limitation on maximum value of R_{IMON} resistor. The IMON pin has an internal clamp of 6.5V (typical).

Accuracy of the current mirror factor is <±1%. Use the following equation to calculate the overall accuracy of $V_{(IMON)}$.

$$\%\, V_{(IMON)} = \frac{V_{(OS_SET)}}{V_{SNS}} \times 100 \quad (17)$$

TPS4812-Q1 features bi-directional current sensing (across CS1+ and CS1–) and monitoring using IMON output to get magnitude of scaled voltage across R_{SNS} (V_{SNS}) and open drain I_DIR output pin indicating direction of current.

I_DIR output is pulled high if current is flowing in forward direction whereas I_DIR is pulled low for reverse current as shown in below figure.

Copyright © 2024 Texas Instruments Incorporated

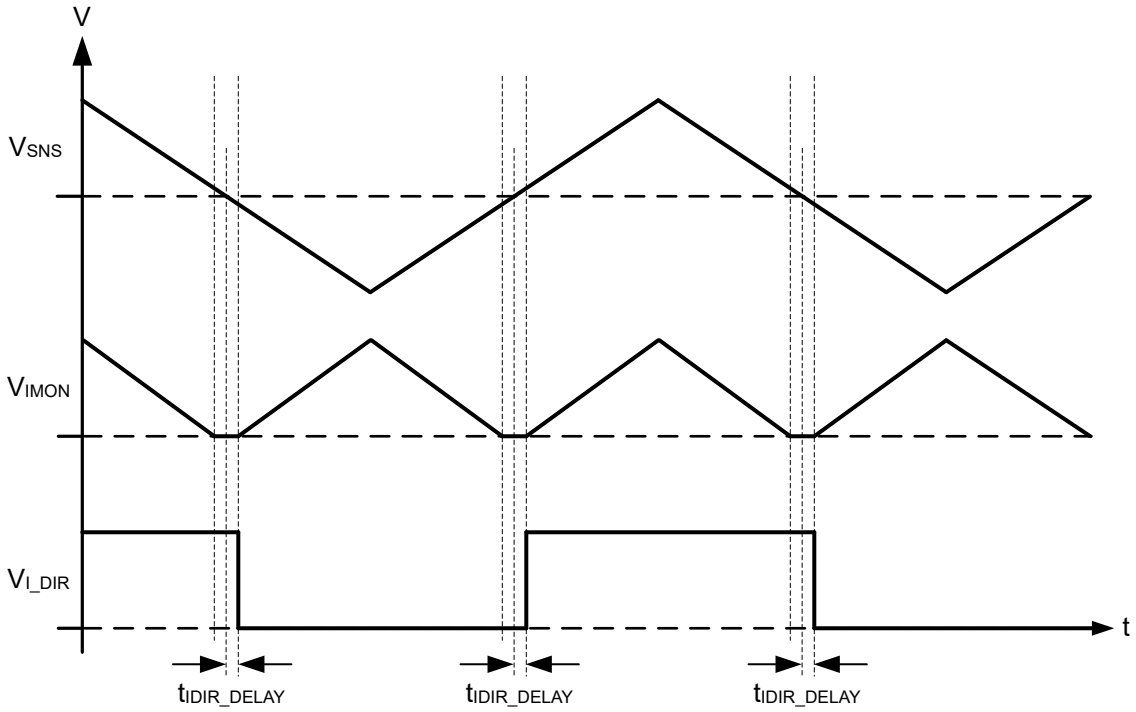

Figure 8-11. TPS4812-Q1 Bi-directional Current Monitoring Timing Diagram

8.3.5 NTC-Based Temperature Sensing (TMP) and Analog Monitor Output (ITMPO)

TPS4812-Q1 features an integrated temperature monitoring amplifier (ON in active mode and load wakeup only). This temperature monitoring function is implemented with a differential amplifier with input pin as TMP and output pin as ITMPO.

The analog output voltage, V_{ITMPO} represents the temperature sensed by R_{NTC}which can be directly read on pin ITMPO (Temperature monitoring output) by microcontroller.

V_{ITMPO} can be calculated based on following equation:

$$V_{ITMPO} = \left(V_{REF_TMP} + V_{TMP_OFFSET}\right) \times \frac{R_{ITMPO}}{\left(R_{NTC} + R_{TMP}\right)} \quad (18)$$

where,

V_{REF_TMP} is 500mV (typical)

V_{TMP_OFFSET} is ±5mV

R_{TMP} is 330Ω for 10k NTC at 25°C

R_{TMP} is 1kΩ for 47k NTC at 25°C

TPS4812-Q1 has integrated comparator on ITMPO pin to detect external main FET overtemperature fault. When voltage on ITMPO exceeds above $V_{(TMP_OT)}$ (2V typ) threshold then main FET (GATE) turns off, device goes into latch-off and $\overline{FLT}$ asserts low. Latch is reset on falling edge of INP or $\overline{LPM}$ going low or EN/UVLO (below $V_{(ENF)}$) or power cycle VS below $V_{(VS_PORF)}$.

External FET overtemperature threshold can be programmed based on following equation:

$$V_{(TMP_OT)} = \left(V_{REF_TMP} + V_{TMP_OFFSET}\right) \times \frac{R_{ITMPO} + R_{INT}}{\left(R_{NTC} + R_{TMP}\right)} \quad (19)$$

Copyright © 2024 Texas Instruments Incorporated

Where,

R_{ITMPO} is resistor in ohm on ITMPO pin.

$V_{(TMP_OT)}$ is fixed external FET overtemperature threshold of 2V (typical).

R_{INT} is internal resistor with 200Ω (typical) and 90/340Ω min/max value.

R_{NTC} is the NTC thermistor resistance which varies with the temperature and R_{TMP} is a normal resistor used to linearize the thermistor behavior with respect to temperature, shown in Figure 8-12:

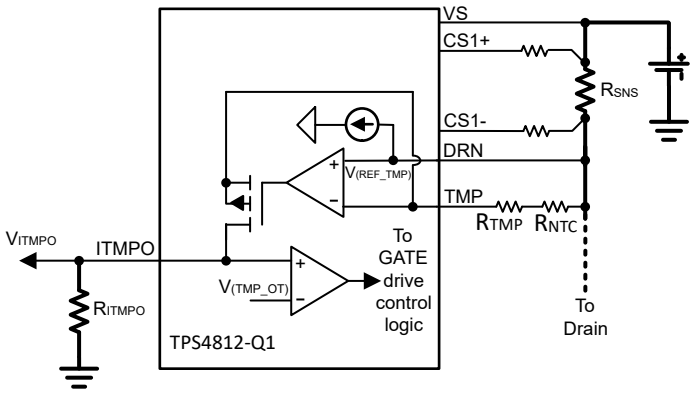

Figure 8-12. NTC-Based Temperature Sensing and Monitoring Output

8.3.6 Fault Indication and Diagnosis ($\overline{FLT}$)

The TPS4812-Q1 feature integrated charge pump UVLO feature. The voltage across BST-SRC is internally monitored. If the voltage is < $V_{(BST_UVLO)}$ then $\overline{FLT}$ is asserted low. Both the GATE and G gate drives also get disabled in this condition turning OFF main and bypass FETs. $\overline{FLT}$ gets de-asserted and gate drivers get enabled when BST to SRC voltage rises above $V_{(BST_UVLO)}$.

$\overline{FLT}$ assets low in TPS4812-Q1 when short-circuit or I2t based overcurrent or charge pump UVLO or NTC based external FET overtemperature is detected.

8.3.7 Reverse Polarity Protection

The TPS4812-Q1 devices features integrated reverse polarity protection to protect the device from failing during input and output reverse polarity faults. Reverse polarity faults occur during installation and maintenance of the end equipment. The device is tolerant to reverse polarity voltages down to –65V both on input and on the output.

On the output side, the device can see transient negative voltages during regular operation due to output cable harness inductance kickbacks when the switches are turned OFF. In such systems the output negative voltage level is limited by the output side TVS or a diode.

8.3.8 Undervoltage Protection (UVLO)

TPS4812-Q1 features an accurate undervoltage protection (< ±2 %) using EN/UVLO pin. When EN/UVLO pin voltage goes below 1.12V(typ), then GATE and G goes low.

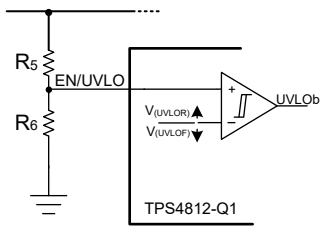

Figure 8-13. Programming Undervoltage Protection Threshold

Copyright © 2024 Texas Instruments Incorporated

8.4 Device Functional Modes

8.4.1 State Diagram

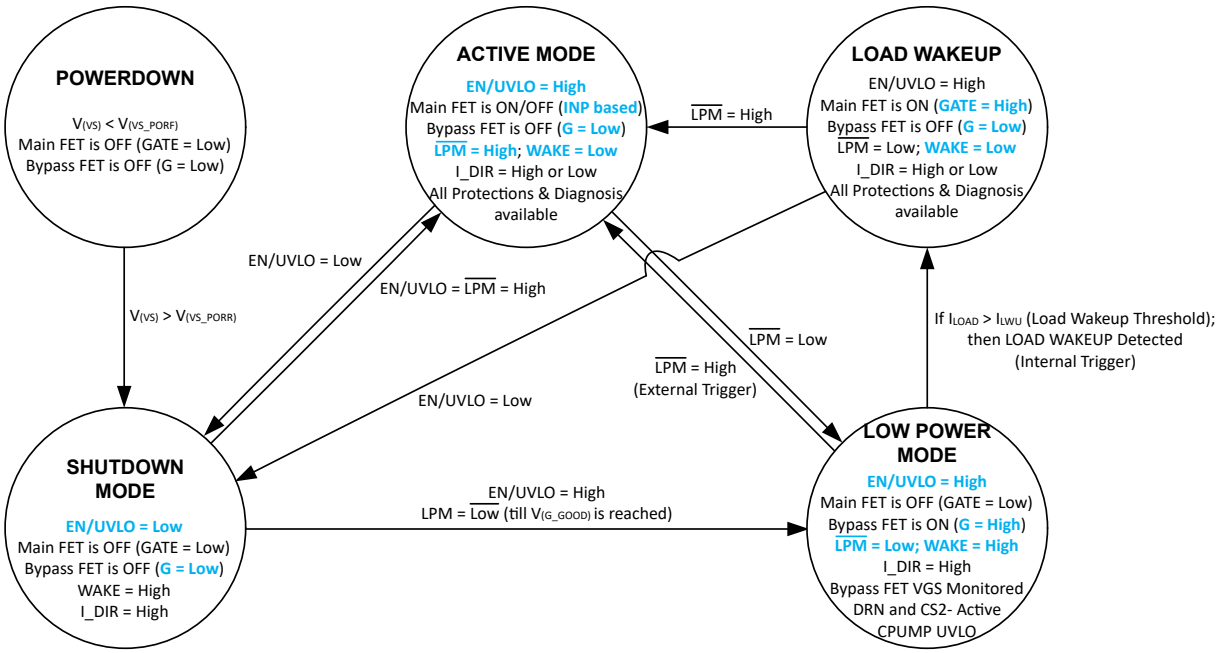

Figure 8-14. State Diagram

8.4.2 State Transition Timing Diagram

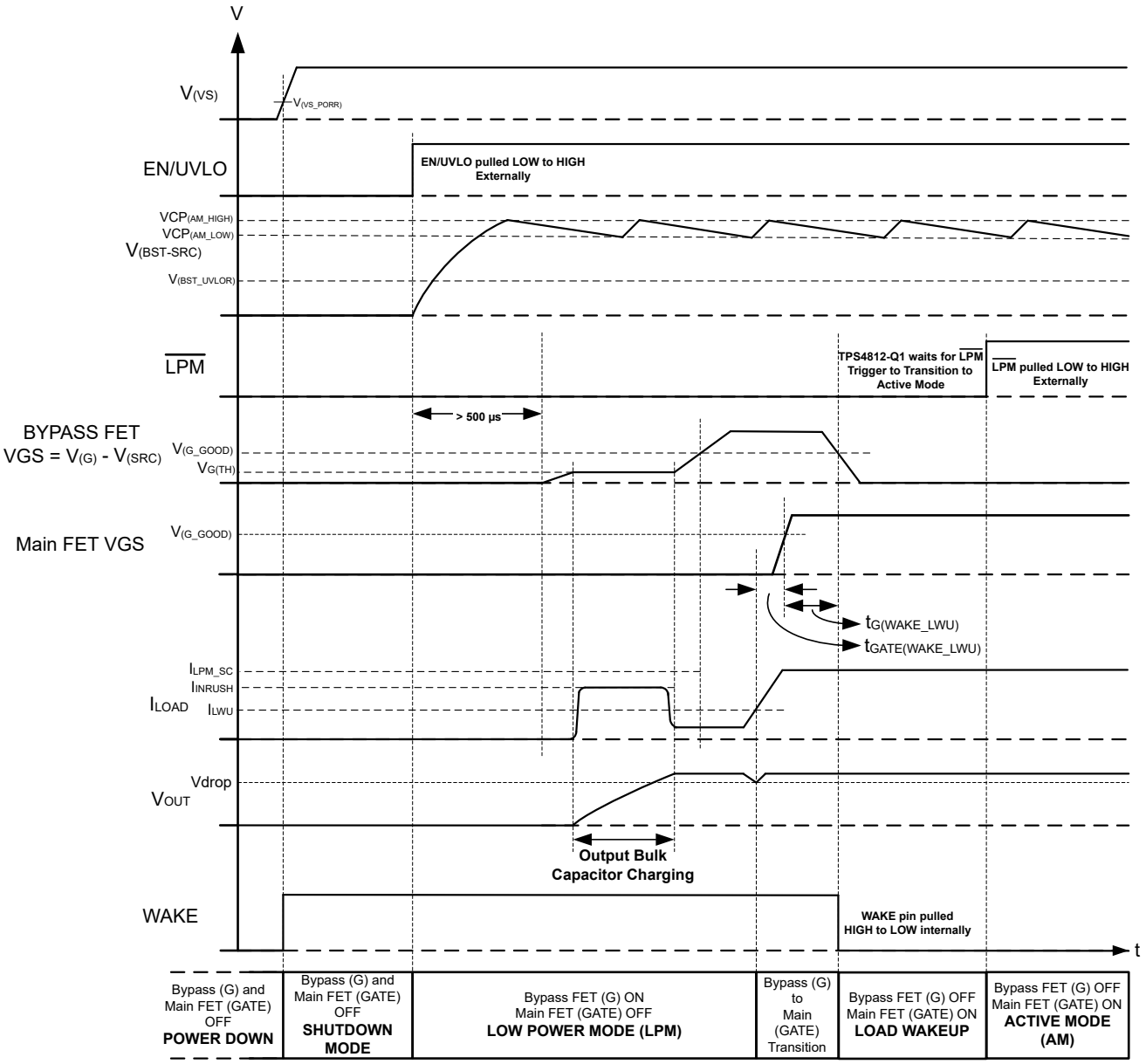

Figure 8-15. State Transition Timing Diagram With Load Wakeup Event

Copyright © 2024 Texas Instruments Incorporated

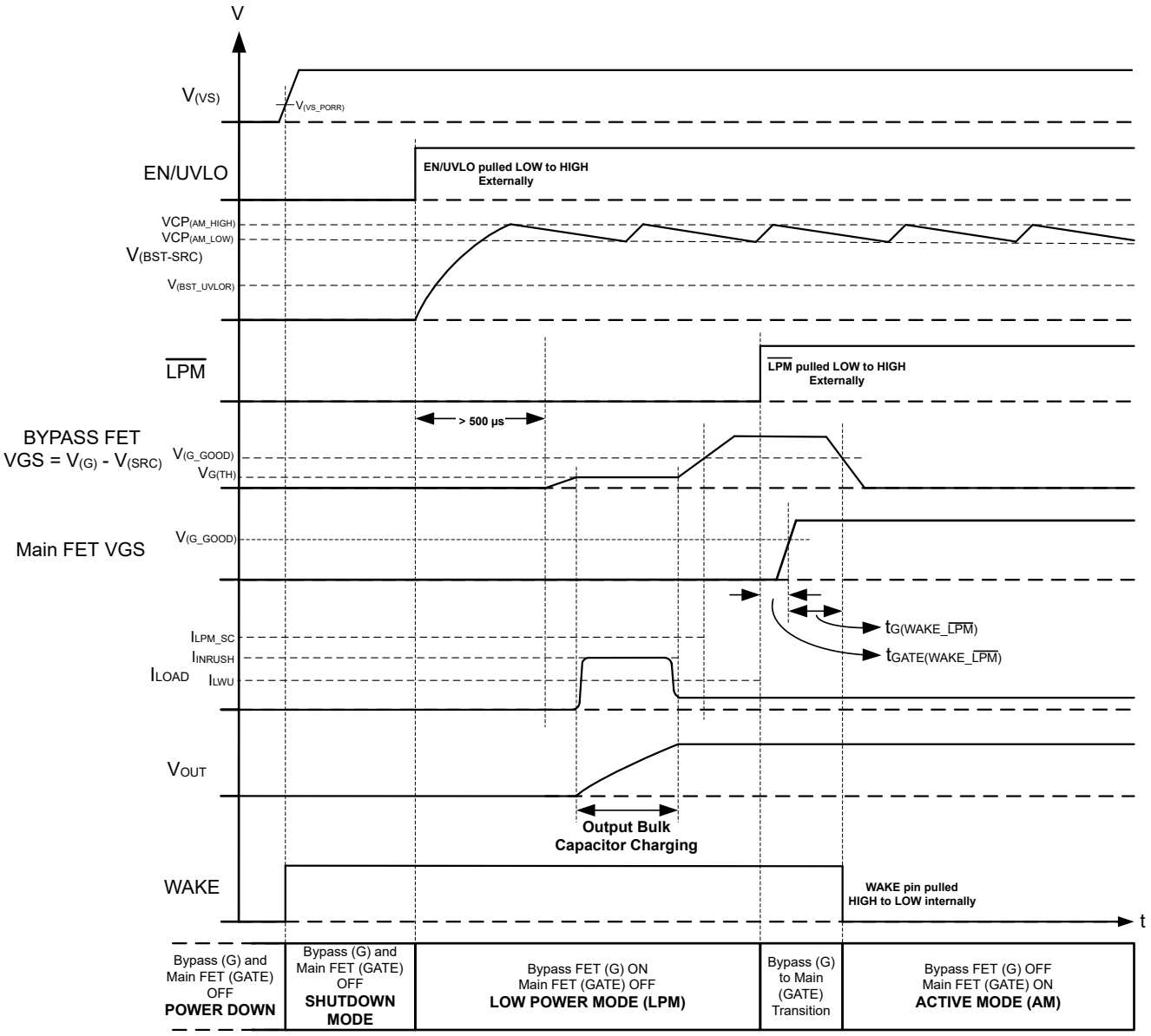

Figure 8-16. State Transition Timing Diagram With $\overline{\text{LPM}}$ Trigger

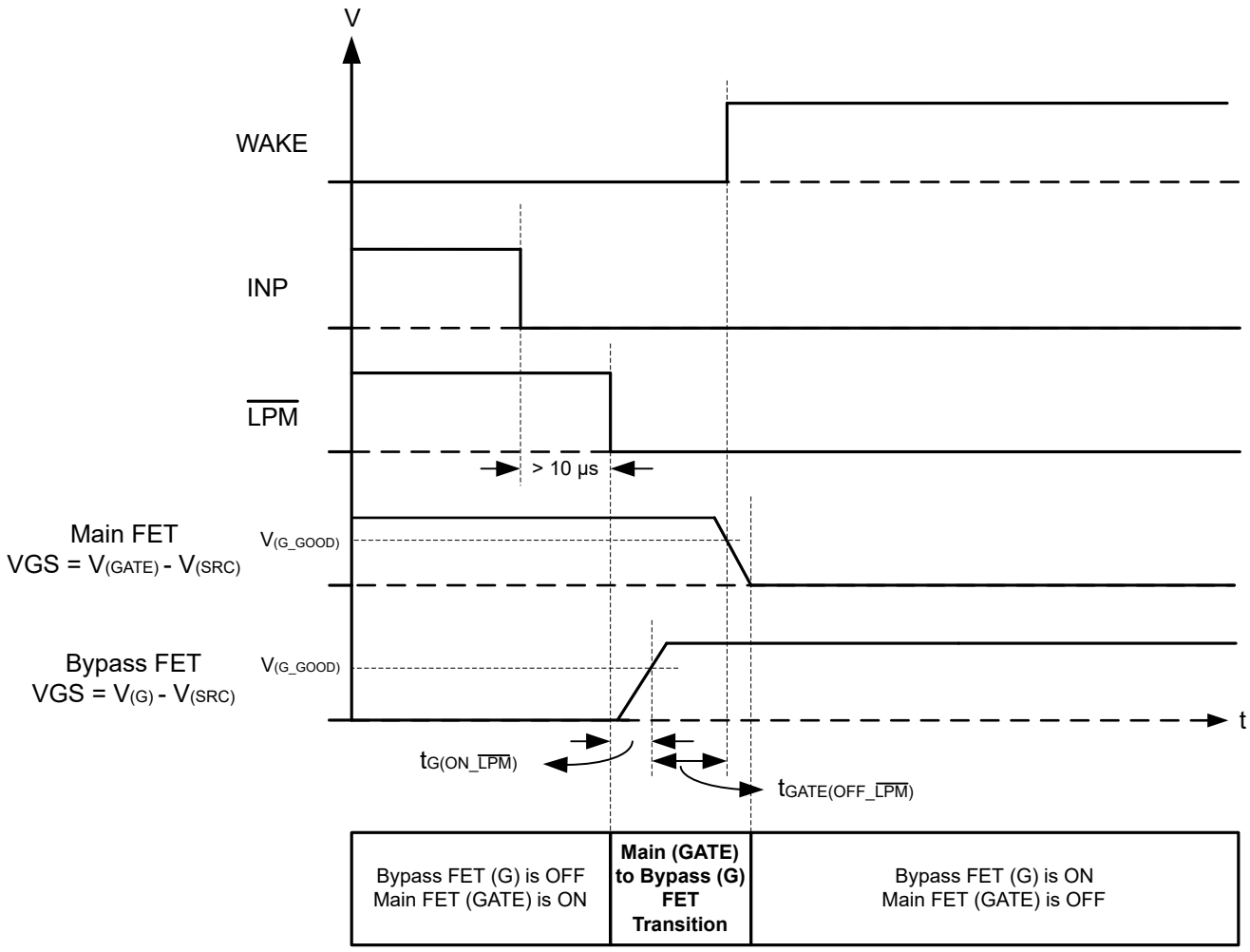

Figure 8-17. $\overline{\text{LPM}}$ and INP Signal Sequencing Consideration to Enter Into Low Power Mode From Active Mode

8.4.3 Power Down

If applied VS voltage is below $V_{(VS_PORF)}$ then the device is in disabled state. In this mode, the charge pump and all the protection features are disabled. Both the gate drive outputs (GATE and G) are low.

8.4.4 Shutdown Mode

With VS > $V_{(VS_PORR)}$ and EN/UVLO pulled < $V_{(ENF)}$, the device transitions to low I_Q shutdown mode. In this mode, the charge pump and all the protection features are disabled. Both the gate drive outputs (GATE and G) are low. The device consumes low I_Q of 1µA (typical) in this mode.

- **Shutdown to Low Power Mode:**

  To transition from shutdown to low power mode, drive EN/UVLO high (> $V_{(ENR)}$) and simultaneously drive $\overline{\text{LPM}}$ low for > 500µs.
- **Shutdown to Active Mode:**

  To transition from shutdown to active mode directly, drive EN/UVLO and $\overline{\text{LPM}}$ together high at same time.

8.4.5 Low Power Mode (LPM)

The device transitions from shutdown to low power mode when EN/UVLO is driven high (>$V_{(ENR)}$) and $\overline{\text{LPM}}$ is driven low for >500µs simultaneously.

Copyright © 2024 Texas Instruments Incorporated

The device can also transition from active mode to low power mode when $\overline{LPM}$ is pulled low. When entering from active mode to low power mode, $\overline{LPM}$ and INP signal sequencing consideration can be followed as per Figure 8-17. Pulling INP low before $\overline{LPM}$ results in main FET (GATE drive) turning OFF which can cause output voltage droop momentarily before bypass FET (G drive) turns ON. Pulling INP low after at least 10µs of $\overline{LPM}$ is pulled low makes a seamless transition from active to low power mode without any output voltage dip.

In this mode, charge pump and G gate drive are enabled. The main FET (GATE drive) is OFF and bypass FET (G drive) is turned ON and WAKE pin asserts high in this state. TPS4812-Q1 consumes low I_Q of 20µA (typical) in low power mode.

The device transitions from low power mode to active mode when:

- **External Trigger:** $\overline{LPM}$ is pulled high externally
- **Internal Trigger:** Load current exceeds load wakeup trigger threshold (I_{LWU})

After load current exceeds load wakeup threshold (I_{LWU}), the device automatically turns ON main FET (GATE drive) first and bypass FET (G drive) is turned OFF after main FET (GATE drive) has fully turned ON and WAKE asserts low indicating the exit from the low power mode.

The device waits for external $\overline{LPM}$ signal to go high to transition into Active mode.

Protections available in low power mode are:

- **Input UVLO:** Bypass FET (G drive) is turned OFF when voltage on EN/UVLO falls below $V_{(UVLOF)}$.
- **Charge pump UVLO:** Bypass FET (G drive) is turned OFF when voltage between BST to SRC falls below $V_{(BST_UVLOF)}$ and $\overline{FLT}$ asserts low.
- **Bypass FET Short-circuit Protection (Wakeup in short):** This protection is available until VGS of bypass FET (G to SRC) reaches V_{G_GOOD} threshold. If voltage across DRN and CS2– exceeds the set short-circuit threshold $V_{(LPM_SCP)}$ then, the device transitions to LOAD WAKEUP state by turning ON main FET (GATE drive) within t_{LPM_SC} time.

  In LOAD WAKEUP state if load current is still high and exceeds set short-circuit threshold (V_{SCP}) then, the device turns OFF main path (GATE drive) and bypass FET (G drive) within t_{SC} time. The device goes in auto-retry or latch-off based on the selected configuration and $\overline{FLT}$ asserts low.

8.4.6 Active Mode (AM)

The device transitions from shutdown mode to active mode directly when EN/UVLO and $\overline{LPM}$ are driven high together at same time.

TPS4812-Q1 transitions from low power mode into active mode by:

- **External Trigger:** Drive $\overline{LPM}$ high externally.
- **Internal Trigger:** After load current exceeds load wakeup threshold (I_{LWU}), TPS4812-Q1 automatically turns ON main FET (GATE drive) and turns OFF the bypass FET (G drive). Drive $\overline{LPM}$ high after load wakeup event to switch to active mode.

In this mode, charge pump, gate drivers and all protections are enabled. The main FET (GATE drive) can be tuned ON or OFF by driving INP high or low respectively and bypass FET (G drive) is turned OFF and WAKE pin asserts low in this state.

The device exits active mode and enters low power mode when $\overline{LPM}$ is pulled low.

Protections available in active state are:

- **Input UVLO:** Main FET (GATE drive) is turned OFF when voltage on EN/UVLO falls below $V_{(UVLOF)}$.
- **Charge pump UVLO**: Main FET (GATE drive) is turned OFF when voltage between BST to SRC falls below $V_{(BST_UVLOF)}$ and $\overline{FLT}$ asserts low.
- **Main path I^2t protection:** Main FET (GATE drive) is turned OFF when voltage across CS1+ and CS1– remains above I^2t start threshold ($V_{(OCP)}$) for time set by the I^2t factor based on C_{I2t}. The device goes in auto-retry or latch-off based on the selected configuration and $\overline{FLT}$ asserts low.

Copyright © 2024 Texas Instruments Incorporated

- **Main path Short-circuit protection**: Main FET (GATE drive) is turned OFF when voltage across CS1+ and CS1– exceeds the set short-circuit threshold ($V_{(SCP)}$). The device goes in auto-retry or latch-off based on the selected configuration and $\overline{FLT}$ asserts low.

Copyright © 2024 Texas Instruments Incorporated

9 Application and Implementation

Note

Information in the following applications sections is not part of the TI component specification, and TI does not warrant its accuracy or completeness. TI's customers are responsible for determining suitability of components for their purposes, as well as validating and testing their design implementation to confirm system functionality.

9.1 Application Information

9.2 Typical Application 1: Driving Power at all times (PAAT) Loads With Automatic Load Wakeup

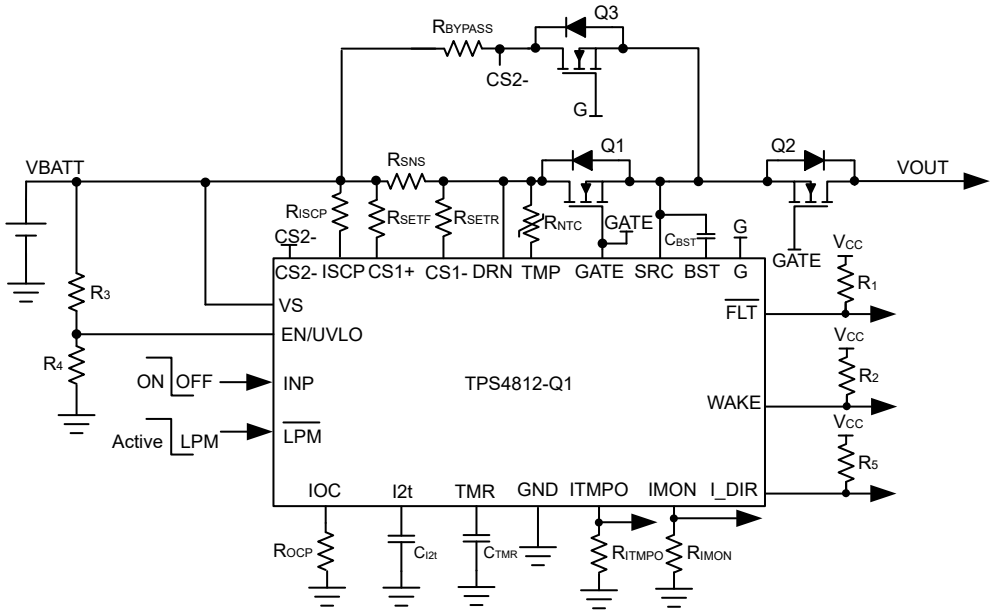

Figure 9-1. TPS4812-Q1 Application circuit for driving power at all times (PAAT) loads with automatic load wakeup

9.2.1 Design Requirements

Table 9-1. Design Parameters

PARAMETER	VALUE
Typical input voltage, V_{BATT_MIN} to V_{BATT_MAX}	36V to 60V
Undervoltage lockout set point, V_{INUVLO}	24V
Maximum load current, I_{OUT}	35A
I^2t Start threshold, I_{OC}	40A
I^2t Protection threshold	$3000A^2s$
Maximum overcurrent threshold, I_{OC_MAX}	120A
Short-circuit protection threshold, I_{SC}	130A
Fault response	Auto-retry
Auto-retry time	1000ms
Load wakeup threshold, I_{LWU}	200mA

Copyright © 2024 Texas Instruments Incorporated

9.2.2 Detailed Design Procedure

Selection of Current Sense Resistor, R_{SNS}

The recommended range of the I^2t based overcurrent protection threshold voltage, $V_{(SNS_OCP)}$, extends from 6mV to 200mV. Values near the low threshold of 6mV can be affected by the system noise. Values near the upper threshold of 200mV can cause high power dissipation in the current sense resistor. To minimize both the concerns, 20mV is selected as the I^2t protection start threshold voltage. The current sense resistor, R_{SNS} can be calculated using following equation:

$$R_{SNS} = \frac{V_{(SNS_OCP)}}{I_{OC}} \tag{20}$$

For 40A (I_{OC}) of I^2t protection start threshold, R_{SNS} is calculated to be 0.5mΩ,

Two of 1mΩ, 1% sense resistor can be used in parallel.

Selection of IMON Scaling Resistor, R_{SET}

R_{SET} is the resistor connected between VS or input supply and CS1+ pins. This resistor scales the I^2t based overcurrent protection threshold voltage and coordinates with R_{IOC}, charging current on C_{I2t} and R_{IMON} to determine the I^2t profile and current monitoring output.

The maximum current on I^2t pin can be calculated based on short-circuit protection (I_{SC}) threshold based on following equation:

$$I_{I2t_MAX}\left(\mu A\right) = K \times {I_{SC}}^2 \tag{21}$$

where scaling factor, K can be calculate based on below equation:

$$\text{Scaling factor}\left(K\right) = \frac{\left(0.1 \times \frac{R_{SNS}}{R_{SET}}\right)^2}{I_{BIAS}} \tag{22}$$

R_{SET} needs to adjusted so that I_{I2t_MAX} is always less than 100µA. The recommended range of R_{SET} is 100Ω–500Ω.

R_{SET} is selected as 300Ω, 1% for this design example to get I_{2t_MAX} current <100µA.

Choosing the Current Monitoring Resistor, R_{IMON}

Voltage at IMON pin $V_{(IMON)}$ is proportional to the output load current. This can be connected to an ADC of the downstream system for monitoring the operating condition and health of the system. The R_{IMON} must be selected based on the maximum load current and the input voltage range of the ADC used. R_{IMON} is set using following equation:

$$V_{(IMON)} = \left(V_{SNS} + V_{(VOS_SET)}\right) \times \frac{0.9 \times R_{IMON}}{R_{SET}} \tag{23}$$

Where $V_{SNS} = I_{OC_MAX} \times R_{SNS}$ and $V_{(OS_SET)}$ is the input referred offset (±150µV) of the current sense amplifier. For I_{OC_MAX} = 120A and considering the operating range of ADC to be 0V to 3.3V (for example, $V_{(IMON)}$ = 3.3V), R_{IMON} is calculated to be 18.33kΩ.

Selecting R_{IMON} value less than shown in Equation 23 ensures that ADC limits are not exceeded for maximum value of load current. Choose the closest available standard value: 18.2kΩ, 1%

Selection of Main path MOSFETs, Q1 and Q2

Copyright © 2024 Texas Instruments Incorporated

Q1 and Q2 For selecting the MOSFET Q1 and Q2, important electrical parameters are the maximum continuous drain current ID, the maximum drain-to-source voltage $V_{DS(MAX)}$, the maximum drain-to-source voltage $V_{GS(MAX)}$, and the drain-to-source ON resistance $R_{DS(ON)}$. The maximum continuous drain current rating (ID) must exceed the maximum continuous load current. The maximum drain-to-source voltage, $V_{DS(MAX)}$, must be high enough to withstand the highest voltage seen in the application. Considering 60V as the maximum application voltage due to load dump, MOSFETs with VDS voltage rating of 80V is chosen for this application.

The maximum VGS TPS4812-Q1 can drive is 12V, so a MOSFET with 15V minimum VGS rating must be selected.

To reduce the MOSFET conduction losses, an appropriate $R_{DS(ON)}$ is preferred. Based on the design requirements, two of IAUS200N08S5N023 are selected and its ratings are:

- 80V $V_{DS(MAX)}$ and ±20V $V_{GS(MAX)}$
- $R_{DS(ON)}$ is 2.3mΩ typical at 10V VGS
- MOSFET Qg(total) is 110nC max

TI recommends to make sure that the short-circuit conditions such V_{BATT_MAX} and I_{SC} are within SOA of selected FETs (Q1 and Q2) for >t_{SC} (5µs max) timing.

Selection of Bootstrap Capacitor, C_{BST}

The internal charge pump charges the external bootstrap capacitor (connected between BST and SRC pins) with approximately 600µA. Use the following equation to calculate the minimum required value of the bootstrap capacitor for driving two parallel BUK7J1R4-40H MOSFETs.

$$C_{BST} = \frac{Q_{g(total)}}{1\ V} \tag{24}$$

Choose closest available standard value: 220nF, 10 %.

Programming the I^2t Profile, R_{IOC} and C_{I2t} Selection

The R_{IOC} sets the I^2t protection start threshold, whose value can be calculated using following equation:

$$R_{IOC}\left(\Omega\right) = \frac{V_{(REF_OC)}}{K \times \left(I_{OC}\right)^2} \tag{25}$$

where scaling factor, K can be calculate based on following equation:

$$\text{Scaling factor}\left(K\right) = \frac{\left(0.1 \times \frac{R_{SNS}}{R_{SET}}\right)^2}{I_{BIAS}} \tag{26}$$

To set 40A as I^2t protection start threshold, R_{IOC} value is calculated to be 23kΩ.

Choose the closest available standard value: 23kΩ, 1%.

The time to turn OFF the gate drive at maximum overcurrent limit (I_{OC_MAX}) can be determined using below equation:

$$t_{OC_MIN}\left(s\right) = \frac{\text{I2T factor}}{I_{OC_MAX} \times I_{OC_MAX}} \tag{27}$$

To set 3000A^2s as I^2t factor, t_{OC_MIN} value is calculated to be 208ms.

Use Equation 28 to calculate the required C_{I2t} value:

$$C_{I2t}\left(F\right) = \frac{K \times t_{OC_MIN}}{V_{(I2t_OC)} - V_{(I2t_OFFSET)}} \times \left[{I_{OC_MAX}}^2 - {I_{OC}}^2\right] \tag{28}$$

Copyright © 2024 Texas Instruments Incorporated

To set 3000A^{2}s as I^{2}t factor with 40A as I^{2}T start threshold and 120A as maximum overcurrent, C_{I2t} is calculated to be ~880nF.

Choose the closest available standard value: 1µF, 10%.

Programming the Short-Circuit Protection Threshold, R_{ISCP} Selection

The R_{ISCP} sets the short-circuit protection threshold, whose value can be calculated using following equation:

$$R_{ISCP}\left(k\Omega\right) = \frac{I_{SC} \times R_{SNS} - 1.8}{I_{SCP}} \quad (29)$$

To set 130A as short-circuit protection threshold, R_{ISCP} value is calculated to be 2.53kΩ for two FETs in parallel. Choose the closest available standard value: 2.55kΩ, 1%.

Programming the Fault Timer Period, C_{TMR} Selection

For the design example under discussion, the auto-retry time, t_{RETRY} can be set by selecting appropriate capacitor C_{TMR} from TMR pin to ground. The value of C_{TMR} to set 1ms for t_{RETRY} can be calculated using following equation:

$$t_{RETRY}\left(s\right) = 64 \times C_{TMR} \times \left[\frac{V_{(TMR_HIGH)} - V_{(TMR_LOW)}}{I_{(TMR_SRC)}}\right] \quad (30)$$

To set 1000ms as auto-retry time, C_{TMR} value is calculated to be 39.06nF.

Choose closest available standard value: 47nF, 10%.

Programming the Load Wakeup Threshold, R_{BYPASS} and Q3 Selection

During normal operation, the resistor R_{BYPASS} along with bypass FET R_{DSON} is used to set load wakeup current threshold. For selecting the MOSFET Q3, important electrical parameters are the maximum continuous drain current ID, the maximum drain-to-source voltage $V_{DS(MAX)}$, the maximum drain-to-source voltage $V_{GS(MAX)}$, and the drain-to-source ON resistance $R_{DS(ON)}$.

Based on the design requirements, SQS182ELNW-T1 is selected and its ratings are:

- 80V $V_{DS(MAX)}$ and ±20V $V_{GS(MAX)}$
- $R_{DS(ON)}$ is 11mΩ typical at 10V VGS
- MOSFET $Q_{g(total)}$ is 26nC typical
- MOSET $V_{GS(th)}$ is 1.4V min
- MOSFET C_{ISS} is 1457pF typical

R_{BYPASS} resistor value can be selected using below equation:

$$R_{BYPASS} = \frac{V_{(LWU)}}{I_{LWU}} \quad (31)$$

To set 200mA load wakeup current, R_{BYPASS} resistor is calculated to be 1Ω.

The average power rating of the bypass resistor can be calculated by following equation:

$$P_{AVG} = I_{LWU}^2 \times R_{BYPASS} \quad (32)$$

The average power dissipation of R_{BYPASS} is calculated to be 0.04W.

The peak power dissipation in the bypass resistor is given by following equation:

$$P_{PEAK} = \frac{V_{BATT_MAX}^2}{R_{BYPASS}} \quad (33)$$

Copyright © 2024 Texas Instruments Incorporated

The peak power dissipation of R_{BYPASS} is calculated to be ~3600W. The peak power dissipation time for power-up with short into LPM can be derived from $t_{(LPM_SC)}$ parameter (5µs) in electrical characteristics table.

Based on P_{PEAK} and $t_{(LPM_SC)}$, Two of 2Ω, 1%, 1.5W CRCW25122R00JNEGHP resistor are used in parallel to support both average and peak power dissipation for >$t_{(LPM_SC)}$ time. TI suggests the designer to share the entire power dissipation profile of bypass resistor with the resistor manufacturer and get their recommendation.

The peak short-circuit current in bypass path can be calculated based on following equation:

$$I_{PEAK_BYPASS} = \frac{V_{BATT_MAX}}{R_{BYPASS}} \quad (34)$$

I_{PEAK_BYPASS} is calculated to be 60A based on R_{BYPASS} selected in Equation 31. TI suggest the designer to ensure that operating point (V_{BATT_MAX}, I_{PEAK_BYPASS}) for bypass path (Q3) is within the SOA curve for > $t_{(LPM_SC)}$ time.

Setting the Undervoltage Lockout Set Point, R3 and R4

The undervoltage lockout (UVLO) can be adjusted using an external voltage divider network of R3 and R4 connected between VS, EN/UVLO and GND pins of the device. The values required for setting the undervoltage and overvoltage are calculated by solving below equation:

$$V_{(UVLOR)} = V_{INUVLO} \times \frac{R4}{R3 + R4} \quad (35)$$

For minimizing the input current drawn from the power supply, TI recommends to use higher values of resistance for R3 and R4. However, leakage currents due to external active components connected to the resistor string can add error to these calculations. So, the resistor string current, $I_{(R34)}$ must be chosen to be 20 times greater than the leakage current of UVLO pin.

From the device electrical specifications, $V_{(UVLOR)}$ = 1.2V. From the design requirements, V_{INUVLO} is 24V. To solve the equation, first choose the value of R3 = 470kΩ and use Equation 35 to solve for R4 = 24.3kΩ.

Choose the closest standard 1% resistor values: R3 = 470kΩ, and R4 = 24.9kΩ.

9.2.3 Application Curves

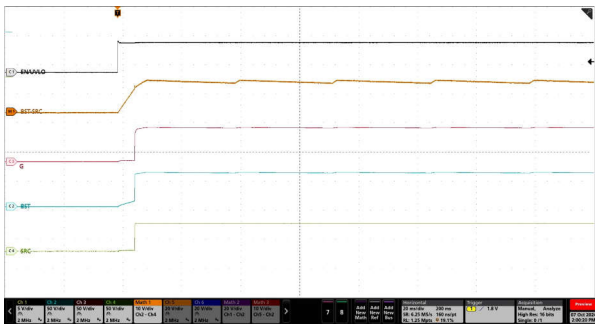

Figure 9-2. Start-Up Profile of Low Power Path ($\overline{LPM}$ = Low, VIN = 48V, No Load, C_{BST} = 470nF)

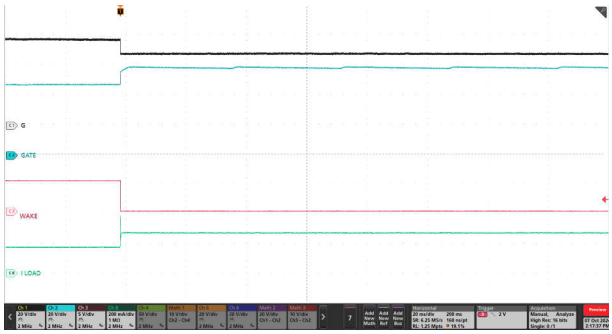

Figure 9-3. State Transition From LPM to Active Mode ($\overline{LPM}$ = Low, VIN = 48V, EN/UVLO = High)

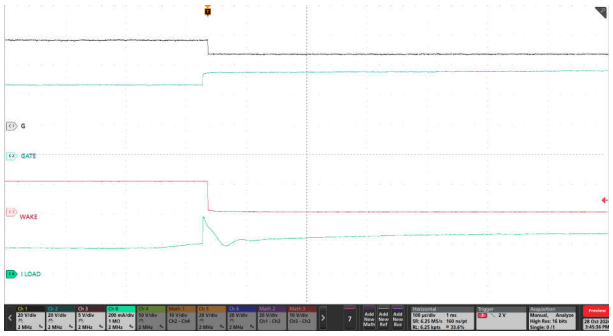

Figure 9-4. Zoom-In View of State Transition From LPM to Active Mode ($\overline{LPM}$ = Low, VIN = 48V, EN/UVLO = High)

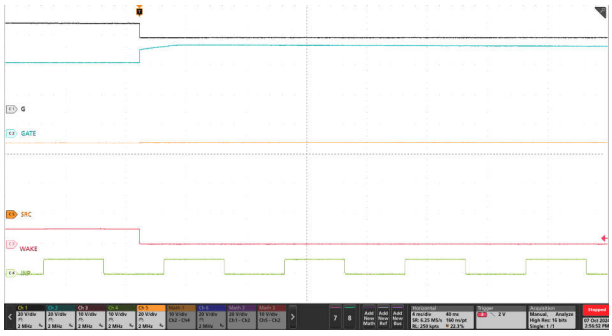

Figure 9-5. When $\overline{LPM}$ = Low in LOAD WAKEUP state, INP Has No Control on GATE

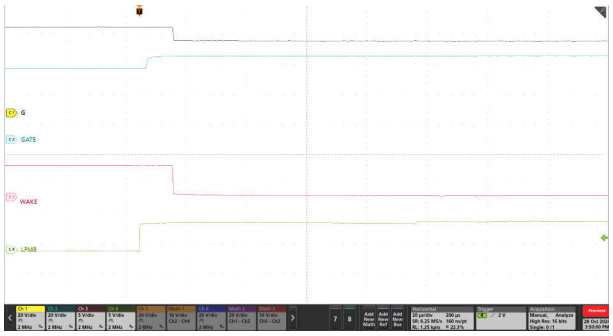

Figure 9-6. State Transition From LPM to Active Mode ($\overline{LPM}$ = Low to High, VIN = 48V, No Load)

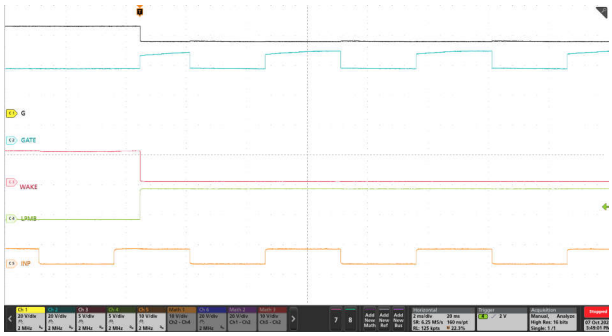

Figure 9-7. With $\overline{LPM}$ = Low to High, INP Gained Control on GATE (VIN = 48V, No Load)

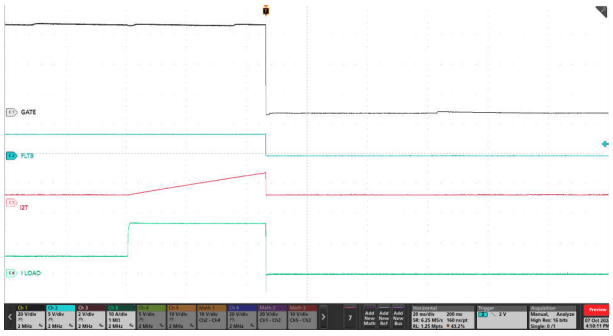

Figure 9-8. I^2T based Overcurrent Response of TPS4812-Q1 EVM for 6A to 16A Load Step

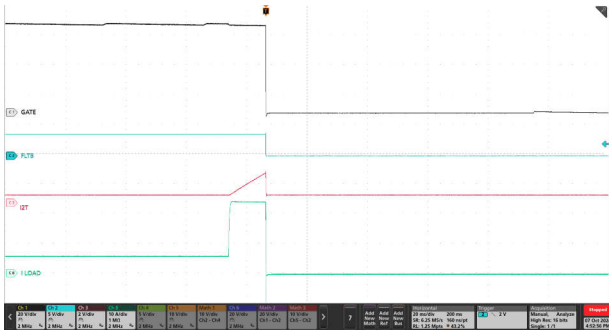

Figure 9-9. I^2T based Overcurrent Response of TPS4812-Q1 EVM for 6A to 23A Load Step

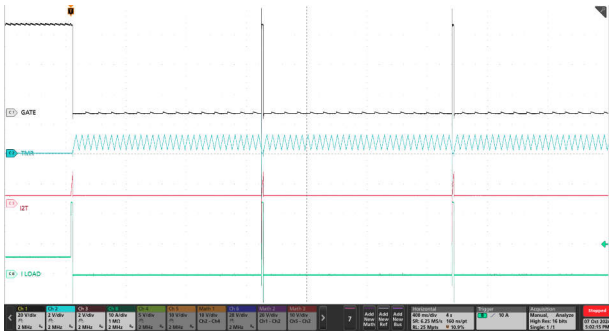

Figure 9-10. Auto-Retry Response of TPS4812-Q1 for an I^2T-Based Overcurrent Fault

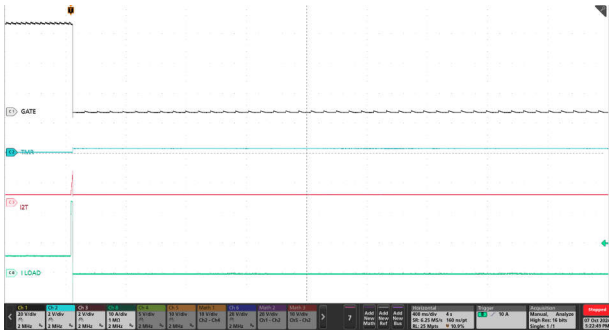

Figure 9-11. Latch-Off Response of TPS4812-Q1 for an I^2T-Based Overcurrent Fault

Copyright © 2024 Texas Instruments Incorporated

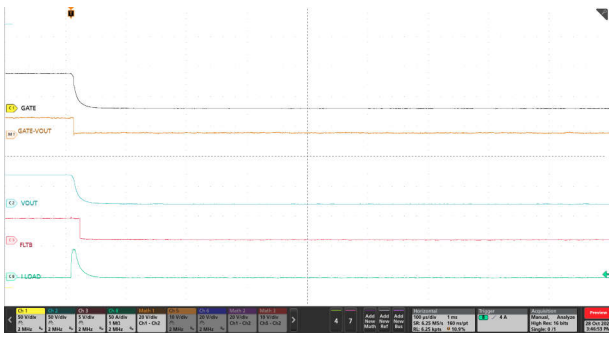

Figure 9-12. Output Short-Circuit Response of TPS4812-Q1

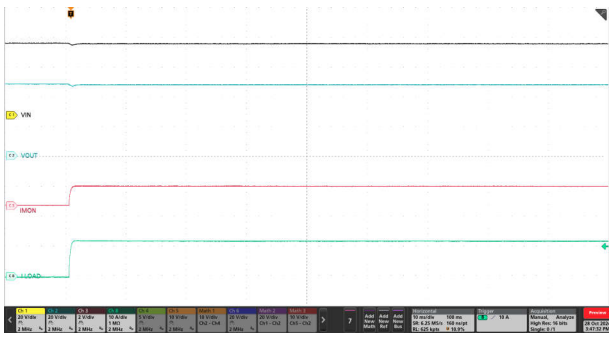

Figure 9-13. TPS4812-Q1 Current Monitoring Output (IMON) Transient Response

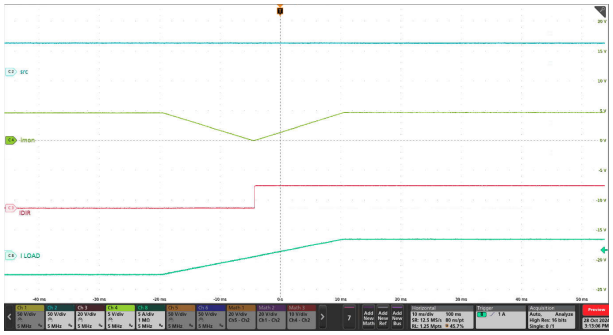

Figure 9-14. TPS4812-Q1 Bi-directional Current Monitoring Output (IMON, I_DIR) Transient Response

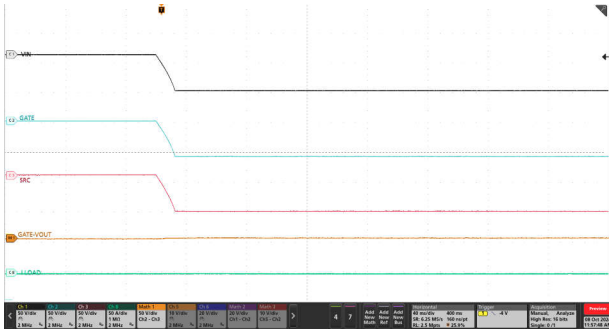

Figure 9-15. GATE Turn-OFF During Input Reverse Battery Fault

9.3 Typical Application 2: Driving Power at all times (PAAT) Loads With Automatic Load Wakeup and Output Bulk Capacitor Charging

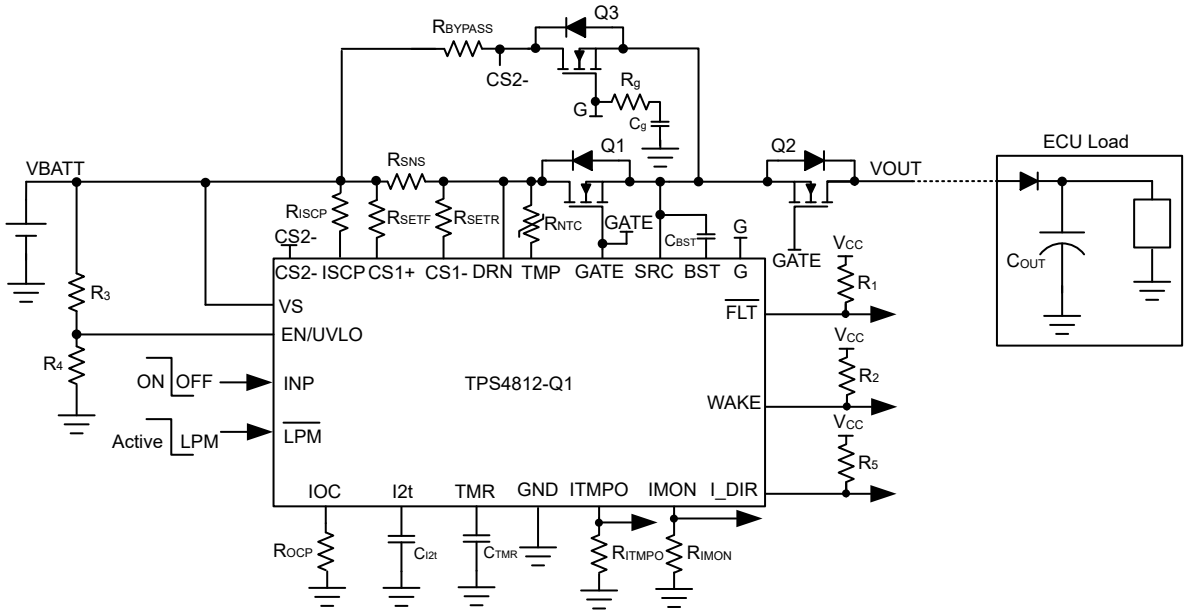

Figure 9-16. TPS4812-Q1 Application circuit for driving power at all times (PAAT) loads with automatic load wakeup and output bulk capacitor charging

Copyright © 2024 Texas Instruments Incorporated

9.3.1 Design Requirements

Table 9-2. Design Parameters

PARAMETER	VALUE
Typical input voltage, V_{BATT_MIN} to V_{BATT_MAX}	36V to 60V
Undervoltage lockout set point, V_{INUVLO}	24V
Maximum load current, I_{OUT}	35A
I^2T Start threshold, I_{OC}	40A
I^2T Protection threshold	$3000A^2s$
Maximum overcurrent threshold, I_{OC_MAX}	120A
Short-circuit protection threshold, I_{SC}	130A
Fault response	Auto-retry
Auto-retry time	1000ms
Load wakeup threshold, I_{LWU}	200mA
Output bulk capacitor, C_{OUT}	1mF
C_{OUT} charging time, T_{charge}	40ms

9.3.2 External Component Selection

By following similar design procedure as outlined in , the external component values are calculated as below:

- R_{SNS} = 0.5mΩ
- R_{SET} = 300Ω
- R_{IMON} = 18.2kΩ
- R_{IOC} = 23kΩ to set 40A as I^2t protection start threshold
- C_{I2t} = 1µF to set $3000A^2s$ as I^2T factor
- C_{BST} = 220nF
- R_{ISCP} = 2.55kΩ to set 130A as short-circuit protection threshold
- C_{TMR} = 47nF to set 1000ms auto-retry time
- R3 and R4 are selected as 470kΩ and 24.9kΩ respectively to set VIN undervoltage lockout threshold at 24V

Programming the Load Wakeup Threshold, R_{BYPASS} and Q_3 Selection

During normal operation, the series resistor R_{BYPASS} is used to set load wakeup current threshold. After V_{G_GOOD} threshold is reached, the voltage between DRN and CS2– is compared against $V_{(LWU)}$ threshold (200mV typ) for load wakeup event. For selecting the MOSFET Q3, important electrical parameters are the maximum continuous drain current I_D, the maximum drain-to-source voltage $V_{DS(MAX)}$, the maximum drain-to-source voltage $V_{GS(MAX)}$, and the drain-to-source ON resistance R_{DSON}.

Based on the design requirements, IAUS200N08S5N023 is selected and its ratings are:

- 80V $V_{DS(MAX)}$ and ±20V $V_{GS(MAX)}$
- $R_{DS(ON)}$ is 2.3mΩ typical at 10V VGS

R_{BYPASS} resistor value can be selected using below equation:

$$R_{BYPASS} = \frac{V_{(LWU)}}{I_{LWU}} \quad (36)$$

To set 200mA load wakeup current, R_{BYPASS} resistor is calculated to be 1Ω.

The average power rating of the bypass resistor can be calculated by following equation:

Copyright © 2024 Texas Instruments Incorporated

$$P_{AVG} = I_{LWU}^2 \times R_{BYPASS} \quad (37)$$

The average power dissipation of R_{BYPASS} is calculated to be 0.04W.

The peak power dissipation in the bypass resistor is given by following equation:

$$P_{PEAK} = \frac{V_{BATT_MAX}^2}{R_{BYPASS}} \quad (38)$$

The peak power dissipation of R_{BYPASS} is calculated to be ~3600W. The peak power dissipation time for power-up with short into LPM can be derived from $t_{(LPM_SC)}$ parameter (5µs) in electrical characteristics table.

Based on P_{PEAK} and $t_{(LPM_SC)}$, Two of 2Ω, 1%, 1.5W CRCW25122R00JNEGHP resistor are used in parallel to support both average and peak power dissipation for > $t_{(LPM_SC)}$ time. TI suggests the designer to share the entire power dissipation profile of bypass resistor with the resistor manufacturer and get their recommendation.

The peak short-circuit current in bypass path can be calculated based on following equation:

$$I_{PEAK_BYPASS} = \frac{V_{BATT_MAX}}{R_{BYPASS}} \quad (39)$$

I_{PEAK_BYPASS} is calculated to be 60A based on R_{BYPASS} selected in Equation 36. TI suggest the designer to ensure that operating point (V_{BATT_MAX}, I_{PEAK_BYPASS}) for bypass path (Q3) is within the SOA curve for > $t_{(LPM_SC)}$ time.

Programming the Inrush Current, R_g and C_g Selection

Use following equation to calculate the I_{INRUSH}:

$$I_{INRUSH} = C_{LOAD} \times \frac{V_{BATT_MAX}}{T_{charge}} \quad (40)$$

I_{INRUSH} calculated in Equation 40 should be always less than wakeup in short in low power mode (I_{LPM_SC}) current which can be calculated using following equation:

$$I_{LPM_SC} = \frac{2\ V}{R_{BYPASS}} \quad (41)$$

For 1Ω R_{BYPASS}, I_{LPM_SC} is calculated to be 2A which is less than I_{INRUSH}.

Use following equation to calculate the required C_g based on I_{INRUSH} calculated in Equation 40.

$$C_g = \frac{C_{LOAD} \times I_{(G)}}{I_{INRUSH}} \quad (42)$$

Where, $I_{(G)}$ is 100µA (typical)

To set I_{INRUSH} at 1.5A, C_g value is calculated to be ~50nF.

A series resistor R_g must be used in conjunction with Cg to limit the discharge current from Cg during turn-off .

The chosen value of R_g is 100Ω and C_g is 68nF.

Copyright © 2024 Texas Instruments Incorporated

9.3.3 Application Curves

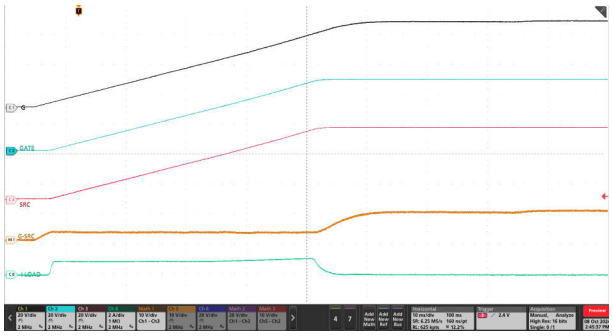

Figure 9-17. Inrush Current Profile With 1000µF at the Output ($\overline{\text{LPM}}$ = Low)

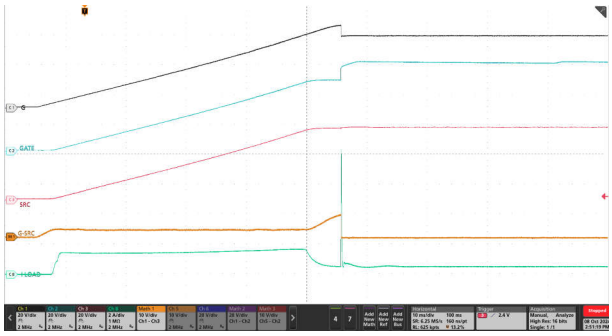

Figure 9-18. Inrush Current Profile With 1000µF at the Output and 0.5A Load ($\overline{\text{LPM}}$ = Low)

9.4 Power Supply Recommendations

When the external MOSFETs turn-OFF during the conditions such as INP control, overcurrent or short-circuit protection causing an interruption of the current flow, the input parasitic line inductance generates a positive voltage spike on the input and output parasitic inductance generates a negative voltage spike on the output. The peak amplitude of voltage spikes (transients) depends on the value of inductance in series to the input or output of the device. These transients can exceed the Absolute Maximum Ratings of the device if steps are not taken to address the issue. Typical methods for addressing transients include:

- Use of a TVS diode and input capacitor filter combination across input to and GND to absorb the energy and dampen the positive transients.
- Use of a diode or a TVS diode across the output and GND to absorb negative spikes.

The TPS4812-Q1 gets powered from the VS pin. Voltage at this pin must be maintained above $V_{(VS_PORR)}$ level to ensure proper operation. If the input power supply source is noisy with transients, then TI recommends to place a R_{VS} – C_{VS} filter between the input supply line and VS pin to filter out the supply noise. TI recommends an R_{VS} value around 100-Ω and C_{VS} value around 0.1 µF.

TPS4812-Q1 uses DRN pin for sensing input reverse polarity fault event. If the input power supply source is noisy with transients, then TI recommends to place a R_{DRN} – C_{DRN} filter between the input supply line and DRN pin to filter out the supply noise. TI recommends an R_{DRN} value around 10-Ω and C_{DRN} value around 0.1 µF.

In a case where large di/dt is involved, the system and layout parasitic inductances can generate large differential signal voltages between CS1+ and CS1– pins. This action can trigger false short-circuit protection and nuisance trips in the system. To overcome such scenario, TI suggests to add a placeholder for RC filter components across the sense resistor (R_{SNS}) and tweak the values during test in the real system.

Figure 9-19 shows the circuit implementation with optional protection components.

Copyright © 2024 Texas Instruments Incorporated

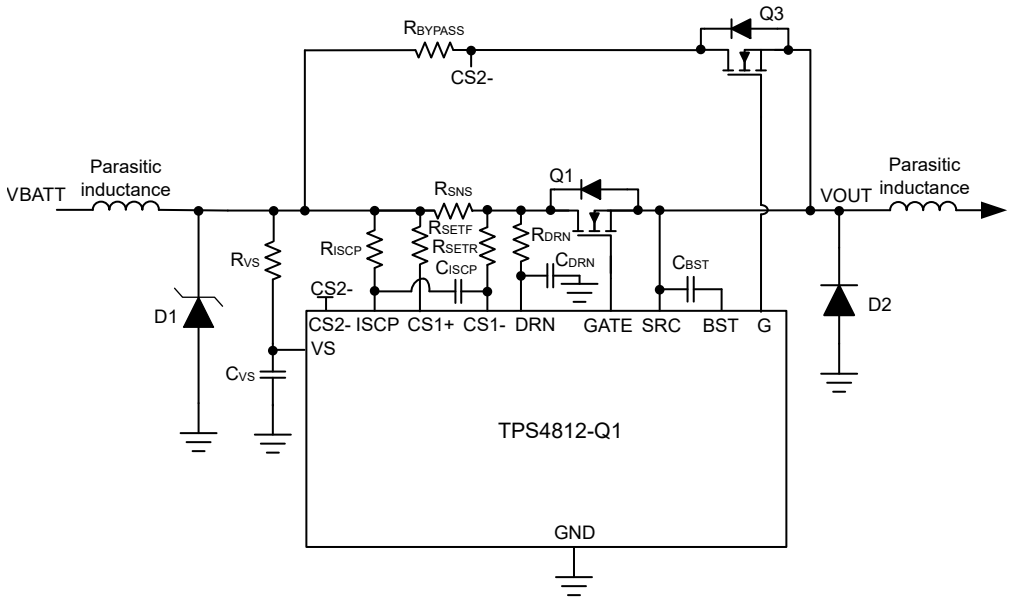

Figure 9-19. Circuit Implementation With Optional Protection Components For TPS4812-Q1

9.5 Layout

9.5.1 Layout Guidelines

- The sense resistor (R_{SNS}) must be placed close to the TPS4812-Q1 and then connect R_{SNS} using the Kelvin techniques. Refer to *Choosing the Right Sense Resistor Layout* for more information on the Kelvin techniques.
- For all the applications, TI recommends a 0.1 µF or higher value ceramic decoupling capacitor between VS terminal and GND. Consider adding RC network at the supply pin (VS) of the controller to improve decoupling against the power line disturbances.
- The high current path from the board's input to the load, and the return path, must be parallel and close to each other to minimize loop inductance.
- The external MOSFETs must be placed close to the controller such that the GATE of the MOSFETs are close to GATE pin to form short GATE loop. Consider adding a place holder for a resistor in series with the Gate of each external MOSFET to damp high frequency oscillations if need arises.
- Place a TVS diode at the input to clamp the voltage transients during hot-plug and fast turn-off events.
- The external boot-strap capacitor must be placed close to BST and SRC pins to form very short loop.
- The ground connections for the various components around the TPS4812-Q1 must be connected directly to each other, and to the TPS4812-Q1's GND, and then connected to the system ground at one point. Do not connect the various component grounds to each other through the high current ground line.

Copyright © 2024 Texas Instruments Incorporated

9.5.2 Layout Example

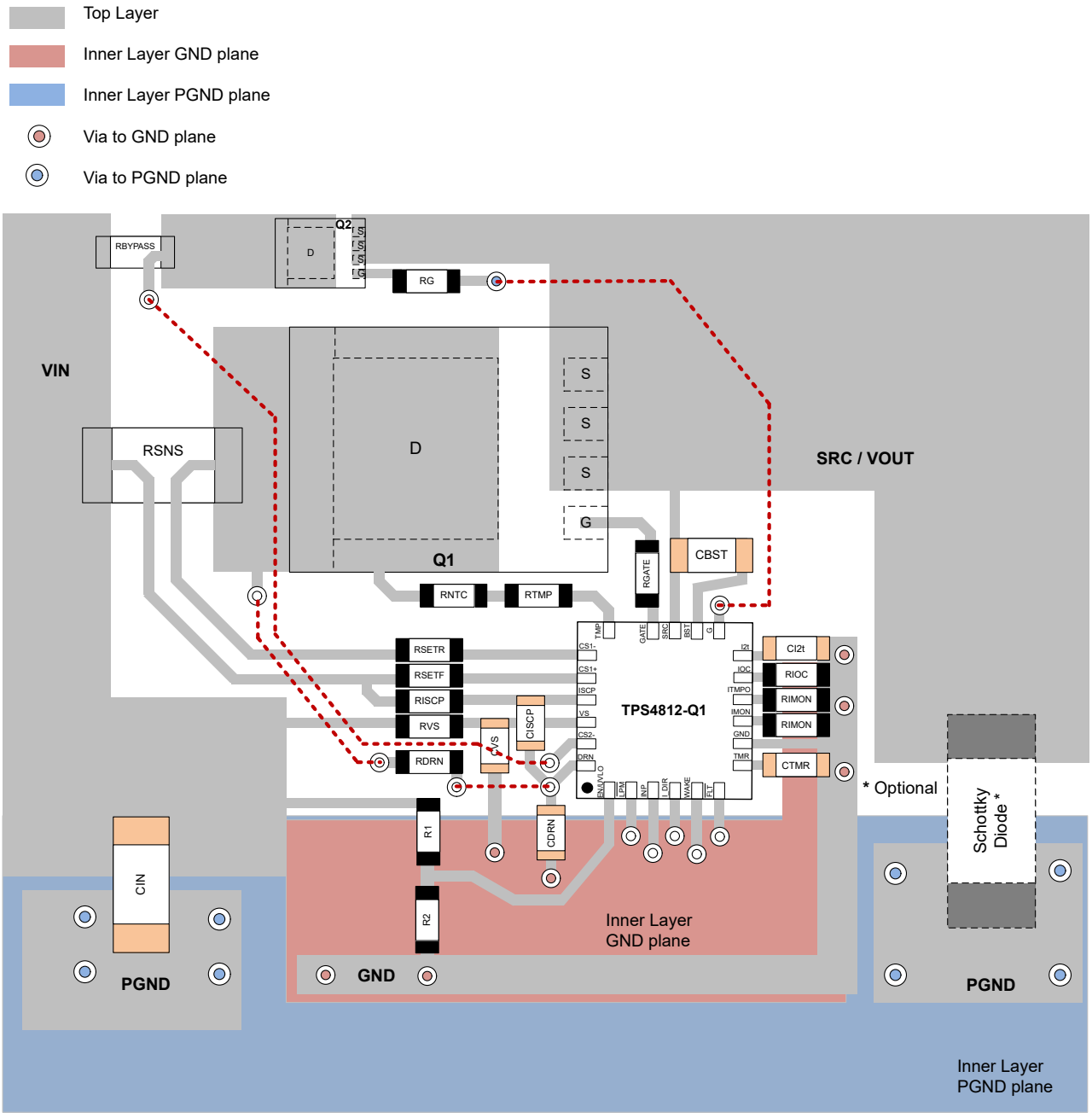

Figure 9-20. Typical PCB Layout Example of TPS4812-Q1

Copyright © 2024 Texas Instruments Incorporated

10 Device and Documentation Support

TI offers an extensive line of development tools. Tools and software to evaluate the performance of the device, generate code, and develop solutions are listed below.

10.1 Receiving Notification of Documentation Updates

To receive notification of documentation updates, navigate to the device product folder on ti.com. Click on *Notifications* to register and receive a weekly digest of any product information that has changed. For change details, review the revision history included in any revised document.

10.2 Support Resources

TI E2E™ support forums are an engineer's go-to source for fast, verified answers and design help — straight from the experts. Search existing answers or ask your own question to get the quick design help you need.

Linked content is provided "AS IS" by the respective contributors. They do not constitute TI specifications and do not necessarily reflect TI's views; see TI's Terms of Use.

10.3 Trademarks

TI E2E™ is a trademark of Texas Instruments.
All trademarks are the property of their respective owners.

10.4 Electrostatic Discharge Caution



This integrated circuit can be damaged by ESD. Texas Instruments recommends that all integrated circuits be handled with appropriate precautions. Failure to observe proper handling and installation procedures can cause damage.

ESD damage can range from subtle performance degradation to complete device failure. Precision integrated circuits may be more susceptible to damage because very small parametric changes could cause the device not to meet its published specifications.

10.5 Glossary

TI Glossary	This glossary lists and explains terms, acronyms, and definitions.

11 Revision History

NOTE: Page numbers for previous revisions may differ from page numbers in the current version.

DATE	REVISION	NOTES
December 2024	*	Initial Release

12 Mechanical, Packaging, and Orderable Information

The following pages include mechanical, packaging, and orderable information. This information is the most current data available for the designated devices. This data is subject to change without notice and revision of this document. For browser-based versions of this data sheet, refer to the left-hand navigation.

Copyright © 2024 Texas Instruments Incorporated

PACKAGING INFORMATION

Orderable part number	Status (1)	Material type (2)	Package | Pins	Package qty | Carrier	RoHS (3)	Lead finish/ Ball material (4)	MSL rating/ Peak reflow (5)	Op temp (°C)	Part marking (6)
TPS48120QRGERQ1	Active	Production	VQFN (RGE) | 23	3000 | LARGE T&R	Yes	NIPDAU	Level-2-260C-1 YEAR	-40 to 125	TPS 48120Q
TPS48120QRGERQ1.A	Active	Production	VQFN (RGE) | 23	3000 | LARGE T&R	Yes	NIPDAU	Level-2-260C-1 YEAR	See TPS48120QRGERQ1	TPS 48120Q
TPS48121QRGERQ1	Active	Production	VQFN (RGE) | 23	3000 | LARGE T&R	Yes	NIPDAU	Level-2-260C-1 YEAR	-40 to 125	TPS 48121Q
TPS48121QRGERQ1.A	Active	Production	VQFN (RGE) | 23	3000 | LARGE T&R	Yes	NIPDAU	Level-2-260C-1 YEAR	See TPS48121QRGERQ1	TPS 48121Q

(1) **Status:** For more details on status, see our product life cycle.

(2) **Material type:** When designated, preproduction parts are prototypes/experimental devices, and are not yet approved or released for full production. Testing and final process, including without limitation quality assurance, reliability performance testing, and/or process qualification, may not yet be complete, and this item is subject to further changes or possible discontinuation. If available for ordering, purchases will be subject to an additional waiver at checkout, and are intended for early internal evaluation purposes only. These items are sold without warranties of any kind.

(3) **RoHS values:** Yes, No, RoHS Exempt. See the TI RoHS Statement for additional information and value definition.

(4) **Lead finish/Ball material:** Parts may have multiple material finish options. Finish options are separated by a vertical ruled line. Lead finish/Ball material values may wrap to two lines if the finish value exceeds the maximum column width.

(5) **MSL rating/Peak reflow:** The moisture sensitivity level ratings and peak solder (reflow) temperatures. In the event that a part has multiple moisture sensitivity ratings, only the lowest level per JEDEC standards is shown. Refer to the shipping label for the actual reflow temperature that will be used to mount the part to the printed circuit board.

(6) **Part marking:** There may be an additional marking, which relates to the logo, the lot trace code information, or the environmental category of the part.

Multiple part markings will be inside parentheses. Only one part marking contained in parentheses and separated by a "~" will appear on a part. If a line is indented then it is a continuation of the previous line and the two combined represent the entire part marking for that device.

Important Information and Disclaimer: The information provided on this page represents TI's knowledge and belief as of the date that it is provided. TI bases its knowledge and belief on information provided by third parties, and makes no representation or warranty as to the accuracy of such information. Efforts are underway to better integrate information from third parties. TI has taken and continues to take reasonable steps to provide representative and accurate information but may not have conducted destructive testing or chemical analysis on incoming materials and chemicals. TI and TI suppliers consider certain information to be proprietary, and thus CAS numbers and other limited information may not be available for release.

In no event shall TI's liability arising out of such information exceed the total purchase price of the TI part(s) at issue in this document sold by TI to Customer on an annual basis.

TAPE AND REEL INFORMATION

REEL DIMENSIONS

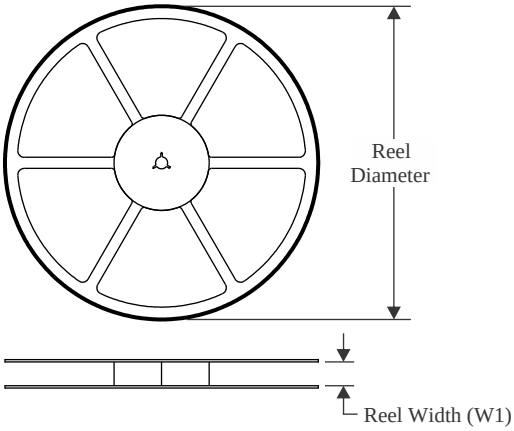

TAPE DIMENSIONS

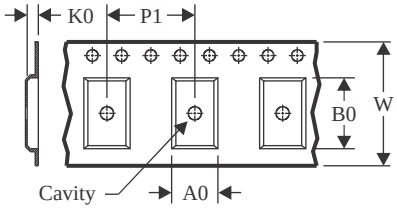

A0	Dimension designed to accommodate the component width
B0	Dimension designed to accommodate the component length
K0	Dimension designed to accommodate the component thickness
W	Overall width of the carrier tape
P1	Pitch between successive cavity centers

QUADRANT ASSIGNMENTS FOR PIN 1 ORIENTATION IN TAPE

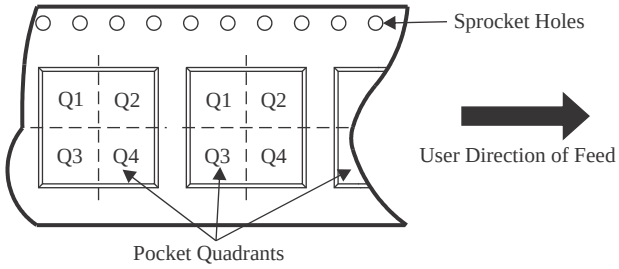

*All dimensions are nominal

Device	Package Type	Package Drawing	Pins	SPQ	Reel Diameter (mm)	Reel Width W1 (mm)	A0 (mm)	B0 (mm)	K0 (mm)	P1 (mm)	W (mm)	Pin1 Quadrant
TPS48120QRGERQ1	VQFN	RGE	23	3000	330.0	12.4	4.25	4.25	1.15	8.0	12.0	Q2
TPS48121QRGERQ1	VQFN	RGE	23	3000	330.0	12.4	4.25	4.25	1.15	8.0	12.0	Q2

TAPE AND REEL BOX DIMENSIONS

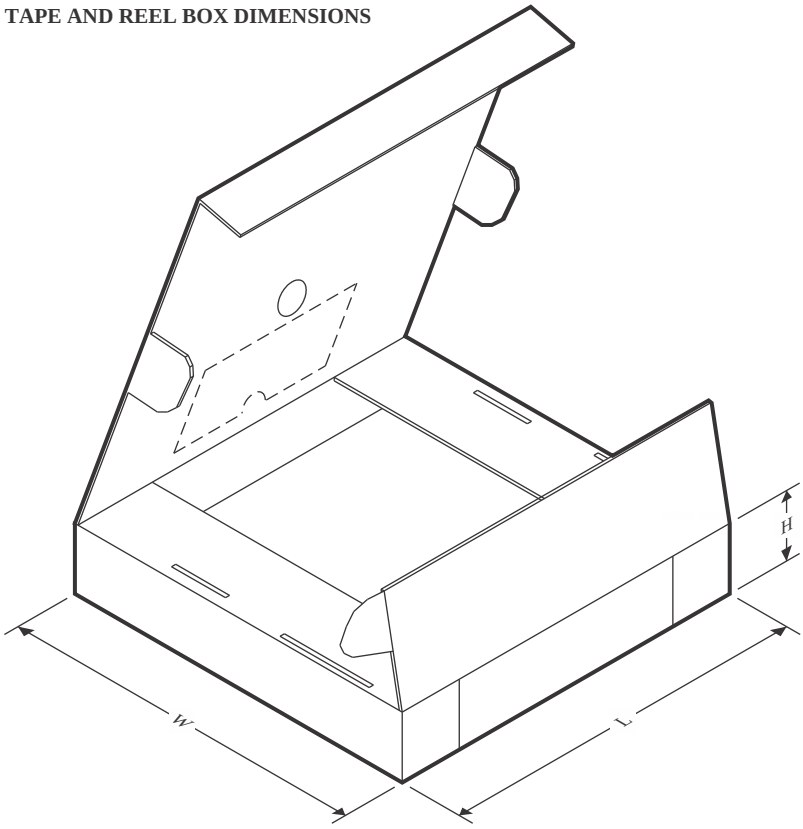

*All dimensions are nominal

Device	Package Type	Package Drawing	Pins	SPQ	Length (mm)	Width (mm)	Height (mm)
TPS48120QRGERQ1	VQFN	RGE	23	3000	360.0	360.0	36.0
TPS48121QRGERQ1	VQFN	RGE	23	3000	360.0	360.0	36.0

RGE0023A

PACKAGE OUTLINE

VQFN - 1 mm max height

PLASTIC QUAD FLATPACK - NO LEAD

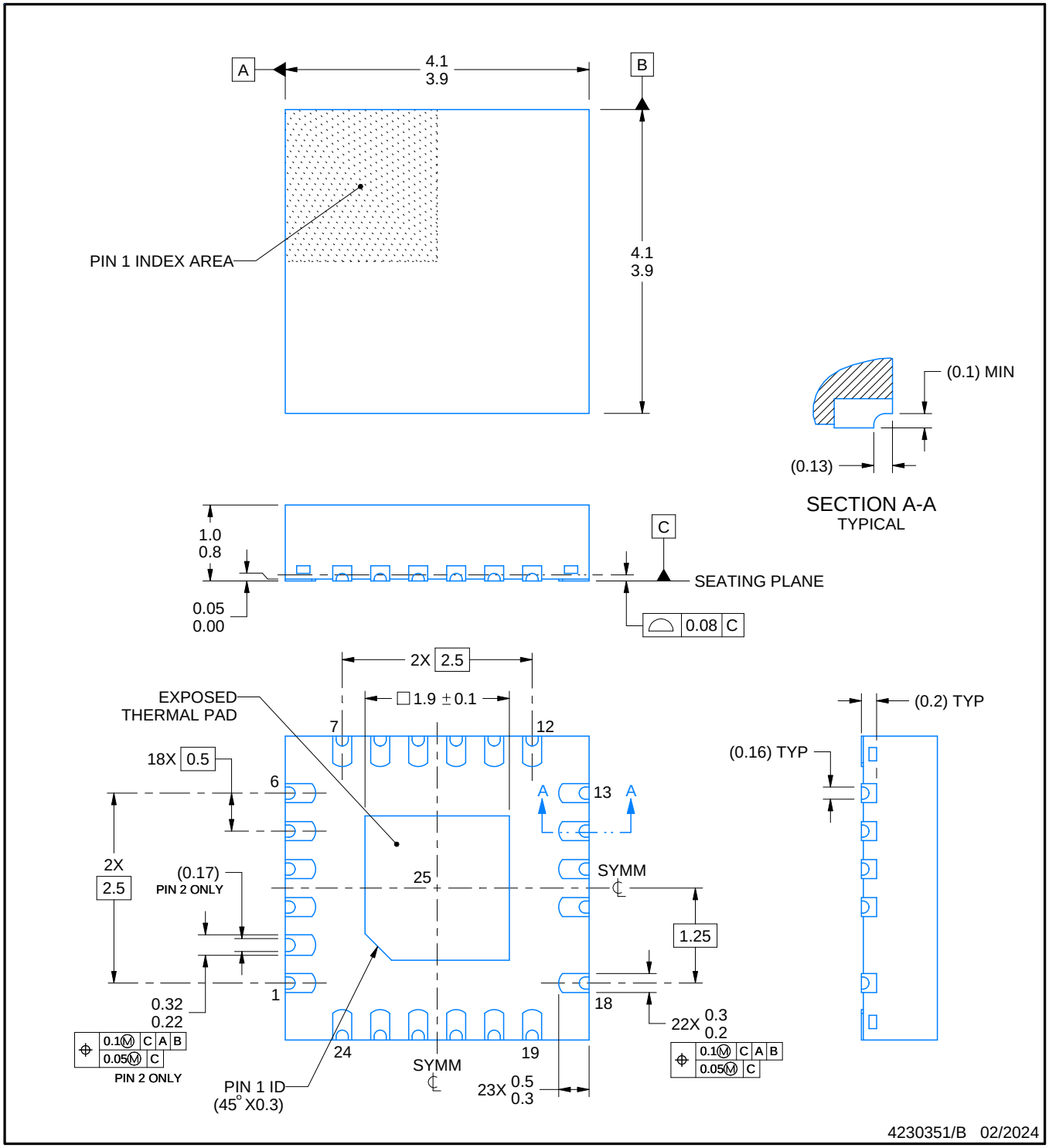

NOTES:

1. All linear dimensions are in millimeters. Any dimensions in parenthesis are for reference only. Dimensioning and tolerancing per ASME Y14.5M.
2. This drawing is subject to change without notice.
3. The package thermal pad must be soldered to the printed circuit board for thermal and mechanical performance.

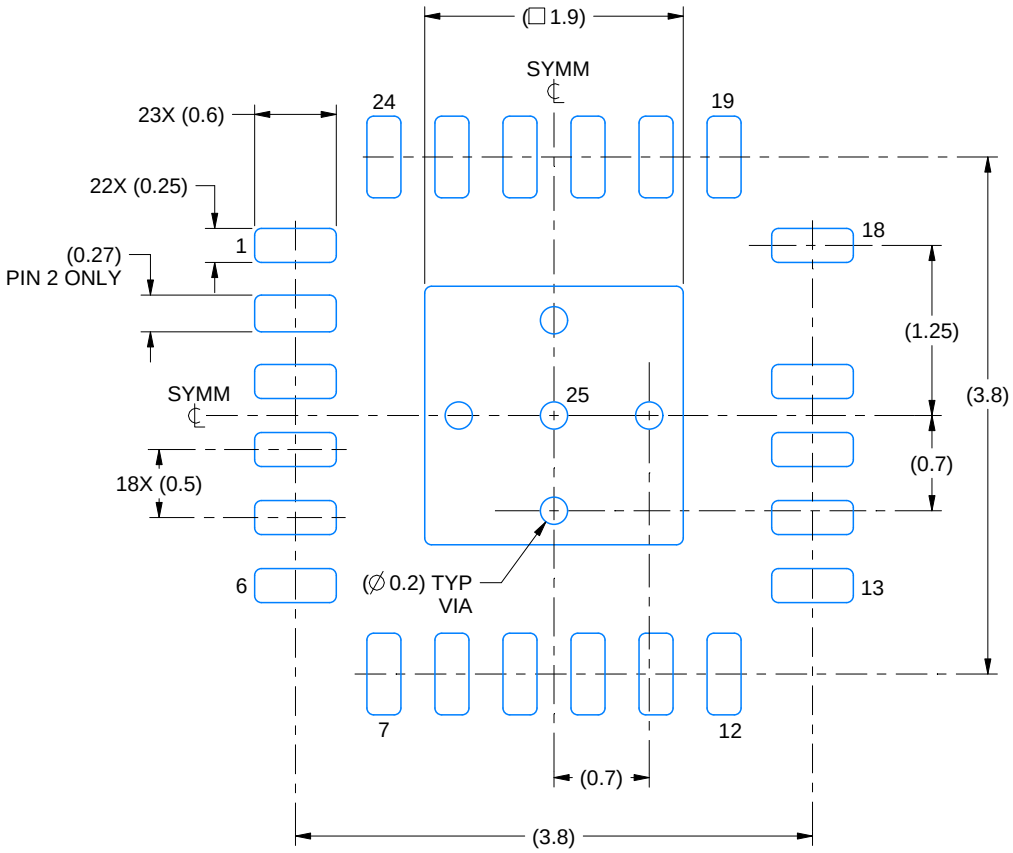

LAND PATTERN EXAMPLE
EXPOSED METAL SHOWN
SCALE:18X

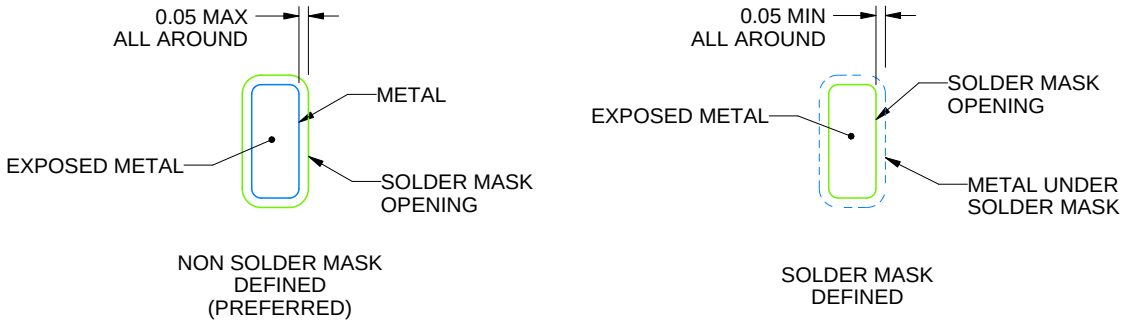

NON SOLDER MASK DEFINED (PREFERRED)

SOLDER MASK DEFINED

SOLDER MASK DETAILS

4230351/B 02/2024

NOTES: (continued)

4. This package is designed to be soldered to a thermal pad on the board. For more information, see Texas Instruments literature number SLUA271 (www.ti.com/lit/slua271).
5. Vias are optional depending on application, refer to device data sheet. If any vias are implemented, refer to their locations shown on this view. It is recommended that vias under paste be filled, plugged or tented.

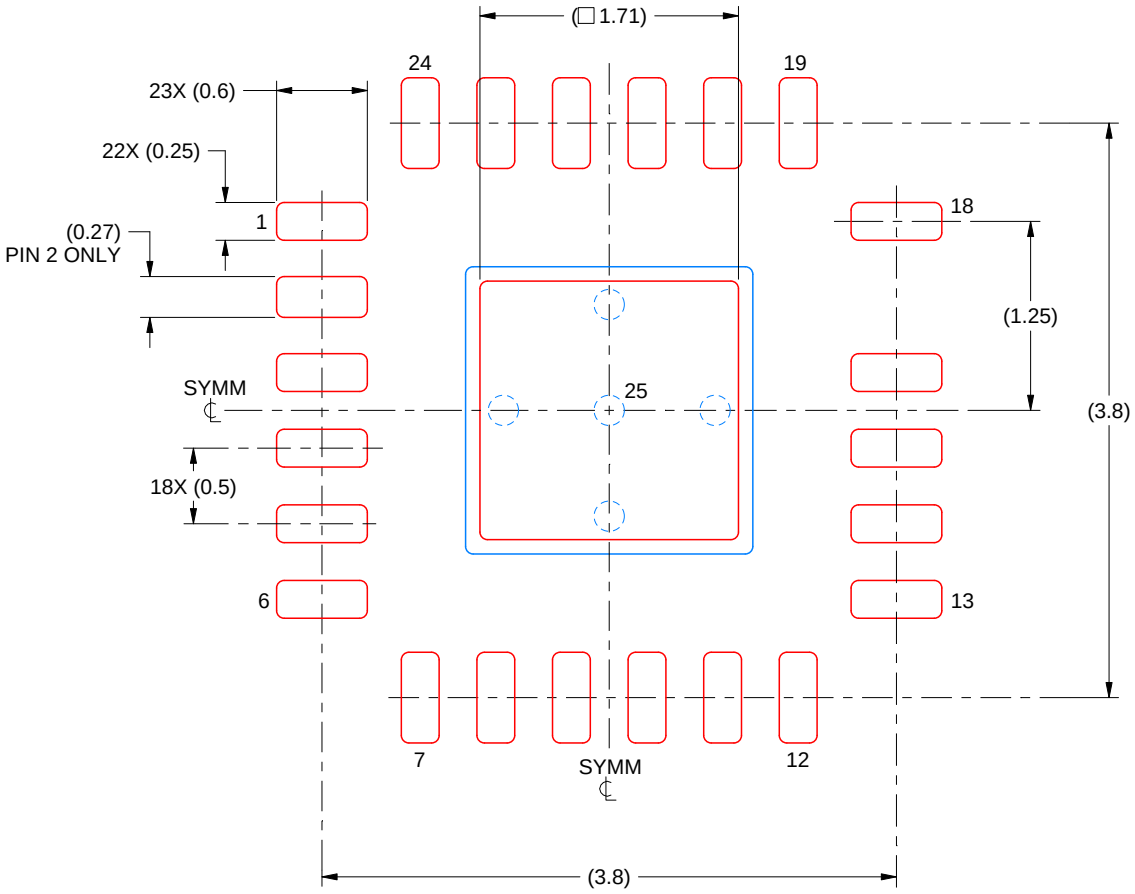

SOLDER PASTE EXAMPLE
BASED ON 0.1 mm THICK STENCIL

THERMAL PAD 25:
77% PRINTED SOLDER COVERAGE BY AREA UNDER PACKAGE
SCALE:20X

NOTES: (continued)

6. Laser cutting apertures with trapezoidal walls and rounded corners may offer better paste release. IPC-7525 may have alternate design recommendations.

IMPORTANT NOTICE AND DISCLAIMER

TI PROVIDES TECHNICAL AND RELIABILITY DATA (INCLUDING DATASHEETS), DESIGN RESOURCES (INCLUDING REFERENCE DESIGNS), APPLICATION OR OTHER DESIGN ADVICE, WEB TOOLS, SAFETY INFORMATION, AND OTHER RESOURCES “AS IS” AND WITH ALL FAULTS, AND DISCLAIMS ALL WARRANTIES, EXPRESS AND IMPLIED, INCLUDING WITHOUT LIMITATION ANY IMPLIED WARRANTIES OF MERCHANTABILITY, FITNESS FOR A PARTICULAR PURPOSE OR NON-INFRINGEMENT OF THIRD PARTY INTELLECTUAL PROPERTY RIGHTS.

These resources are intended for skilled developers designing with TI products. You are solely responsible for (1) selecting the appropriate TI products for your application, (2) designing, validating and testing your application, and (3) ensuring your application meets applicable standards, and any other safety, security, regulatory or other requirements.

These resources are subject to change without notice. TI grants you permission to use these resources only for development of an application that uses the TI products described in the resource. Other reproduction and display of these resources is prohibited. No license is granted to any other TI intellectual property right or to any third party intellectual property right. TI disclaims responsibility for, and you fully indemnify TI and its representatives against any claims, damages, costs, losses, and liabilities arising out of your use of these resources.

TI’s products are provided subject to TI’s Terms of Sale, TI’s General Quality Guidelines, or other applicable terms available either on ti.com or provided in conjunction with such TI products. TI’s provision of these resources does not expand or otherwise alter TI’s applicable warranties or warranty disclaimers for TI products. Unless TI explicitly designates a product as custom or customer-specified, TI products are standard, catalog, general purpose devices.

TI objects to and rejects any additional or different terms you may propose.

Copyright © 2026, Texas Instruments Incorporated

Last updated 10/2025