TPS25762-Q1 Automotive USB Type-C® Power Delivery Controller with Buck-Boost Regulator

1 Features

- AEC-Q100 qualified with the following results:
  - Device temperature grade 1: –40°C to +125°C ambient operating temperature range
  - Device HBM ESD classification level 2
  - Device CDM ESD classification level C2b
  - Enhanced connector pin ESD protection
- USB power delivery (PD) controller with programmable power supply (PPS) support
  - Wide V_{IN}: 5.5V to 18V (40V maximum)
  - Integrated buck-boost with 4 power switches supporting up to 65W USB PD output power
  - V_{BUS} output: 3.3V–21V, ±20mV step size
  - I_{BUS} out: 0A–3A, ±50mA current limit step size
  - V_{BUS} short circuit to V_{BAT} and GND protection
  - V_{BUS} cable droop compensation
  - MFi overcurrent protection
  - Switching frequency: 300kHz, 400kHz, 450kHz
  - DC/DC sync in/out with dithering
- USB port configuration options
  - 1 USB-PD port (TPS25762-Q1)
  - 1 USB-PD port with DisplayPort™ over USB-C™ (DP alternate mode) (TPS25763-Q1)
  - 2 USB-PD ports (TPS25772-Q1)
- Compliant to USB
  - USB Type-C® power delivery Rev 3.2
    - CC logic, V_{CONN} source and discharge
    - USB cable polarity detection
  - Battery charging specification v1.2 (BC1.2)
    - DCP: dedicated charging port
- Legacy fast charging
  - 2.7V divider-3 mode
  - 1.2V divider mode
  - high voltage DCP Protocol
- Microcontroller core allows
  - Firmware updates
  - Supply voltage and temperature-dependent power management
- Short to V_{BUS} and V_{BAT} protection
  - V_{BUS}
  - Px_ DP and Px_DM
  - Px_CC1 and Px_CC2
- HotRod™ QFN package with wettable flank

2 Applications

- Automotive USB Charge
- Automotive Media Hub
- Automotive Head Unit
- Automotive Rear Seat Entertainment

3 Description

The TPS25762-Q1 is a fully integrated USB Type-C® Power Delivery (PD) charging port controller with integrated Buck-Boost converter for automotive single USB port applications. Functionality includes: integrated Buck-Boost converter with 4 power switches; an ARM® Cortex®-M0; USB port controller with Type-C cable plug and orientation detection; USB Battery Charging Specification Version 1.2 (BC1.2) detection; USB Endpoint PHY; device power management and supervisory circuitry; and connector pin overvoltage and short-circuit protection.

An intelligent System Power Management (SPM) Engine maximizes delivered USB power while protecting the system from automotive battery transient and over-temperature conditions.

Device configuration settings are selected through an intuitive graphical user interface (GUI).

Package Information

PART NUMBER	PACKAGE(1)	PACKAGE SIZE(2)
TPS25762-Q1	RQL (QFN-29)	6.00mm × 5.00mm

(1) For more information, see Mechanical, Packaging, and Orderable Information
(2) The package size (length × width) is a nominal value and includes pins, where applicable.

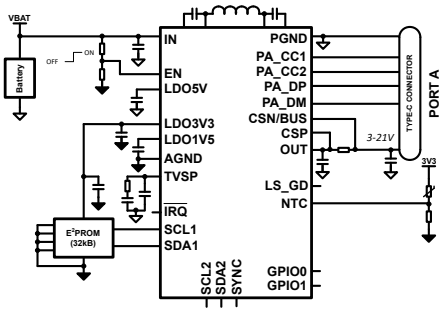

TPS25762-Q1 Simplified Application

An IMPORTANT NOTICE at the end of this data sheet addresses availability, warranty, changes, use in safety-critical applications, intellectual property matters and other important disclaimers. PRODUCTION DATA.

Table of Contents

1 Features....1
2 Applications....1
3 Description....1
4 Device Comparison Table....3
5 Pin Configuration and Functions....4
6 Specifications....6
6.1 Absolute Maximum Ratings....6
6.2 ESD Ratings....7
6.3 Recommended Operating Conditions....7
6.4 Recommended Components....8
6.5 Thermal Information....9
6.6 Buck-Boost Regulator....9
6.7 CC Cable Detection Parameters....13
6.8 CC VCONN Parameters....13
6.9 CC PHY Parameters....14
6.10 Thermal Shutdown Characteristics....15
6.11 Oscillator Characteristics....15
6.12 ADC Characteristics....16
6.13 TVSP Parameters....16
6.14 Input/Output (I/O) Characteristics....17
6.15 BC1.2 Characteristics....18
6.16 I2C Requirements and Characteristics....19
6.17 Typical Characteristics....22
7 Parameter Measurement Information....30
8 Detailed Description....32
8.1 Overview....32
8.2 Functional Block Diagram....33
8.3 Feature Description....33
8.4 Device Functional Modes....68
9 Application and Implementation....69
9.1 Application Information....69
9.2 Typical Application....69
9.3 Power Supply Recommendations....84
9.4 Layout....84
10 Device and Documentation Support....86
10.1 Documentation Support....86
10.2 Receiving Notification of Documentation Updates....86
10.3 Support Resources....86
10.4 Trademarks....86
10.5 Electrostatic Discharge Caution....86
10.6 Glossary....86
11 Revision History....86
12 Mechanical, Packaging, and Orderable Information....88

Copyright © 2026 Texas Instruments Incorporated

4 Device Comparison Table

PART NUMBER	Orderable Device	Port A	Port B	Port A Output Power	Port B Output Power	DP Alternate Mode	Astable VIN Boot Support	Configurable Boot Mode[2]
TPS25762-Q1	TPS25762CQRQLRQ1	USB-PD	n/a	65W	n/a	No	VIN-dependent[1]	Yes
	TPS25762CAQRQLRQ1	USB-PD	n/a	65W	n/a	No	Yes	No
	TPS25762DQRQLRQ1	USB-PD	n/a	65W	n/a	No	Yes	Yes
	TPS25762FQRQLRQ1	USB-PD	n/a	65W	n/a	No	Yes	Yes
TPS25772-Q1	TPS25772CQRQLRQ1	USB-PD	USB-PD	65W	65W	No	VIN-dependent[1]	Yes
	TPS25772CAQRQLRQ1	USB-PD	USB-PD	65W	65W	No	Yes	No
	TPS25772DQRQLRQ1	USB-PD	USB-PD	65W	65W	No	Yes	Yes
	TPS25772FQRQLRQ1	USB-PD	USB-PD	65W	65W	No	Yes	Yes
TPS25763-Q1	TPS25763DQRQLRQ1	USB-PD	n/a	65W	n/a	Yes	Yes	Yes
	TPS25763FQRQLRQ1	USB-PD	n/a	65W	n/a	Yes	Yes	Yes

(1) Device boot up during a stable VIN (for example, cold crank) conditions when VIN oscillation minimum voltage is ≧7.6V until boot is completed. Refer to application brief TPS257x2-Q1 Startup with an Astable Supply Voltage.
(2) Refer to Section 8.3.2.

5 Pin Configuration and Functions

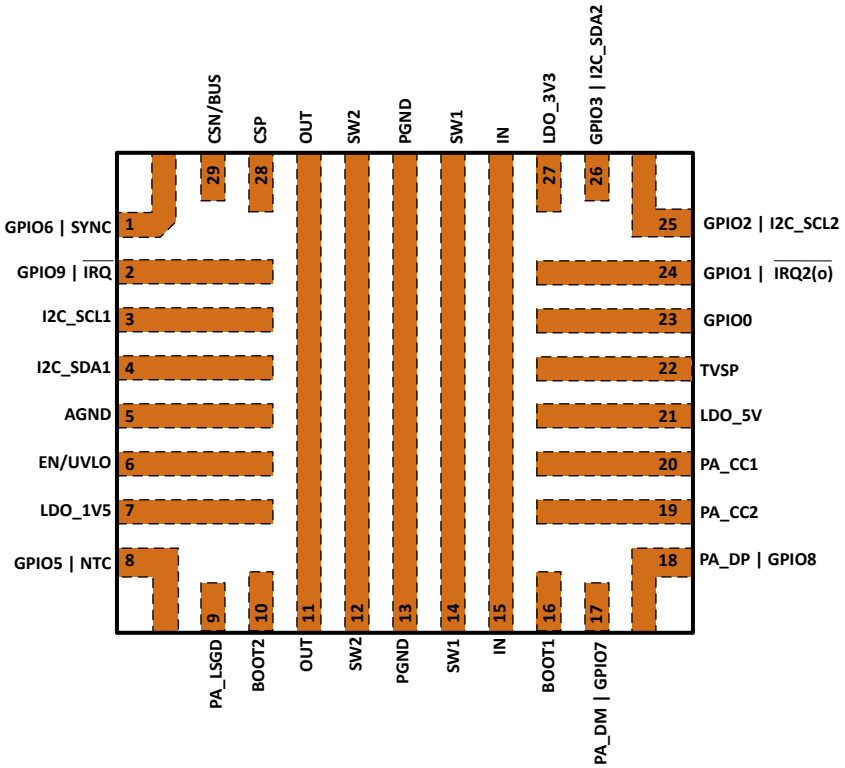

Figure 5-1. TPS25762-Q1 RQL Package, 29-Pin VQFN (Top View)

Copyright © 2026 Texas Instruments Incorporated

Table 5-1. Pin Descriptions

PIN		DESCRIPTION
NAME	NO.	
EN/UVLO	6	Enable pin. For EN/UVLO < 0.3V, the TPS25762-Q1 is in a low current shutdown mode. For EN/UVLO > 1.3V, the full functionality is enabled, provided LDO_5V exceeds the LDO_5V UVLO threshold.
IN	15	The input supply pin to the IC. Connect V_{IN} to a supply voltage between 5.5V and 18V (40V ABS MAX transient).
PGND	13	Power ground of the IC. The high current ground connection to the low-side gate drivers.
SW1	14	The buck side switching node.
SW2	12	The boost side switching node.
BOOT1	16	An external capacitor is required between the BOOT1 and the SW1 pins to provide bias to the high-side MOSFET gate drivers.
BOOT2	10	An external capacitor is required between the BOOT2 and the SW2 pins to provide bias to the high-side MOSFET gate drivers.
AGND	5	Analog ground of the IC.
OUT	11	Output of the buck-boost regulator. Connect to bulk capacitance.
CSP	28	Positive input of the current sense amplifier.
CSN/BUS	29	Negative input of the current sense amplifier. This is the PA_VBUS supply.
LDO_5V	21	Output of internal 5V LDO for buck-boost low-side FET drivers, and Px_VCONN supply. Connect bypass capacitor to PGND. Allowed to be overdriven from external 5V supply.
LDO_3V3	27	Output of internal 3.3V LDO for analog circuitry and GPIO drivers. Connect bypass capacitor to AGND.
LDO_1V5	7	Output of internal 1.5V LDO for digital circuitry. Connect bypass capacitor to AGND.
I2C_SCL1	3	Controller I2C Clock Input/Output.
I2C_SDA1	4	Controller I2C Data Input/Output.
GPIO2 (I2C_SCL2)	25	Multifunction pin. GPIO; or target I2C Clock Input.
GPIO3 (I2C_SDA2)	26	Multifunction pin. GPIO; or target I2C Data Input.
$\overline{\text{IRQ}}$ (GPIO9)	2	Multifunction pin. Interrupt I/O and fault flag for I2C1 or I2C2; or GPIO depending upon firmware configuration. Reports fault conditions set by application configuration firmware.
PA_CC1	20	Analog input/output. Port A Type-C current advertisement, VCONN, and USB PD modem. Connect to Port A Type-C connector CC1 pin.
PA_CC2	19	Analog input/output. Port A Type-C current advertisement, VCONN, and USB PD modem. Connect to Port A Type-C connector CC2 pin.
PA_DP (GPIO8)	18	Multifunction pin. BC1.2 USB 2.0D+ data line input/output. Connect to Port A Type-C USB data line DP connector pins. Used also as GPIO depending upon firmware configuration.
PA_DM (GPIO7)	17	Multifunction pin. BC1.2 USB 2.0D- data line input/output. Connect to Port A Type-C USB data line DM connector pins. Used also as GPIO depending upon firmware configuration.
GPIO0	23	GPIO
GPIO1 or $\overline{\text{IRQ2(o)}}$	24	Multifunction pin. GPIO or Interrupt I/O depending upon firmware configuration.
GPIO5 (NTC)	8	Multifunction pin. GPIO; thermistor input (negative temperature coefficient resistor or positive temperature coefficient resistor).
GPIO6 (SYNC)	1	Multifunction pin. GPIO; SYNC(o) - clock out to synchronize external DC/DC regulators to internal DC/DC switching frequency; SYNC(i) - clock input to synchronize internal DC/DC to an external clock.
PA_LSGD	9	Charge pump output for external NFET for V_{BUS} bulk capacitance blocking.
TVSP	22	Transient voltage protection and firmware setting pin. See TVSP Device Configuration and ESD Protection for boot configuration and R-C network component values.

Copyright © 2026 Texas Instruments Incorporated

6 Specifications

6.1 Absolute Maximum Ratings

Over the recommended operating junction temperature range of -40°C to 150°C and AGND = PGND (unless otherwise noted)[1][2]

		MIN	MAX	UNIT
Input voltage range	IN [3][4] to PGND	–0.3	40	V
Input voltage range	IN with respect to SW1	–0.3	25	V
Input voltage range	EN/UVLO [5] to AGND	–0.3	internally limited	V
Input voltage range	BOOT1 with respect to SW1	–0.3	6	V
Input voltage range	BOOT2 with respect to SW2 [6]	–0.3	6	V
Input voltage range	SW1 [7] to PGND	–0.3	24	V
Input voltage range	SW2 [8] to PGND	–0.3	24	V
Input voltage range	SW2 to OUT		17.5	V
Input voltage range	CSP to PGND	–0.3	24	V
Input voltage range	CSN/BUS to PGND	–0.3	24	V
Input voltage range	CSP to CSN	-0.3	0.3	V
Input voltage range	AGND to PGND	–0.3	0.3	V
Output voltage range	OUT to PGND	–0.3	24	V
Output voltage range	LDO_5V to PGND	–0.3	6	V
Output voltage range	LDO_3V3 to AGND	–0.3	6	V
Output voltage range	LDO_1V5 to AGND	–0.3	2	V
I/O voltage range	TVSP to PGND	–0.3	30	V
I/O voltage range	I2C_SCL1 to AGND	–0.3	6	V
I/O voltage range	I2C_SDA1 to AGND	–0.3	6	V
I/O voltage range	GPIO9, $\overline{\text{IRQ1}}$ to AGND	–0.3	6	V
I/O voltage range	PA_CC1 to AGND	–0.3	30	V
I/O voltage range	PA_CC2 to AGND	–0.3	30	V
I/O voltage range	PA_DM to AGND	–0.3	30	V
I/O voltage range	GPIO7 to AGND	–0.3	6	V
I/O voltage range	PA_DP to AGND	–0.3	30	V
I/O voltage range	GPIO8 to AGND	–0.3	6	V
I/O voltage range	GPIO0 to AGND	–0.3	6	V
I/O voltage range	GPIO1, $\overline{\text{IRQ2}}$ to AGND	–0.3	6	V
I/O voltage range	GPIO2, I2C_SCL2 to AGND	–0.3	6	V
I/O voltage range	GPIO3, I2C_SDA2 to AGND	–0.3	6	V
I/O voltage range	PA_LSGD to PGND	–0.3	30	V
I/O voltage range	GPIO5, NTC to AGND	–0.3	6	V
I/O voltage range	GPIO6, SYNC to AGND	–0.3	6	V
I/O voltage range	PA_LSGD to CSN/BUS	–0.3	10	V

Copyright © 2026 Texas Instruments Incorporated

6.1 Absolute Maximum Ratings (continued)

Over the recommended operating junction temperature range of -40°C to 150°C and AGND = PGND (unless otherwise noted)[(1)(2)]

		MIN	MAX	UNIT
Input current	EN/UVLO	0	2	mA
Output current	Positive source current on PA_CC1, PA_CC2		internally limited	A
Output current	GPIO 2, 3, 5, 6, 7, 8		0.0010	A
Output current	GPIO 0, 1, 4, 9		0.005	A
Output current	positive sink current for I2C_SDA1, I2C_SCL1, I2C_SDA2, I2C2_SCL2		internally limited	A
Output current	positive source current for LDO_5V, LDO_3V3, LDO_1V5		internally limited	A
T_A Operating ambient temperature		–40	125	°C
T_J Operating junction temperature		–40	150	°C
T_{STG} Storage temperature		–55	150	°C

(1) Operation outside the Absolute Maximum Ratings may cause permanent device damage. Absolute Maximum Ratings do not imply functional operation of the device at these or any other conditions beyond those listed under Recommended Operating Conditions. If used outside the Recommended Operating Conditions but within the Absolute Maximum Ratings, the device may not be fully functional, and this may affect device reliability, functionality, performance, and shorten the device lifetime.
(2) All voltage values are with respect to PGND or AGND. Connect the PGND pin directly to the Ground plane of the board. The PGND and AGND traces can be connected near the AGND pin.
(3) When the buck-boost is operating and V_{IN} exceeds 18 V, the positive slew rate dV_{IN}/dt must not exceed 200V/ms.
(4) When applying V_{IN}, the time from V_{IN} exceeding 5 V to V_{IN} exceeding 25 V must not be less than 2 µs and can be achieved by properly sizing the input EMI filter.
(5) EN/UVLO pin is internally clamped to 10V. Ensure input current rating is not exceeded by connecting current limit resistor.
(6) BOOT2 with respect to SW2 during OUT overvoltage conditions can be -15 V due to internal clamp.
(7) SW1 can undershoot PGND by -1 V during negative switching transients as up to 10A (peak) may flow through the body diode. Typical duration ~20 ns. SW1 can overshoot OUT by 1 V during positive transients. Typical duration ~ 20 ns.
(8) SW2 can undershoot PGND by -2 V during switching transients as up to 10A (peak) may flow through the body diode. Typical duration ~20 ns. SW2 can overshoot OUT by 1 V during positive transients. Typical duration ~20 ns.

6.2 ESD Ratings

				VALUE	UNIT
$V_{(ESD)}$	Electrostatic discharge	Human-body model (HBM), per AEC Q100-002		±2000[(1)]	V
$V_{(ESD)}$	Electrostatic discharge	Charged-device model (CDM), per AEC Q100-011		±750[(2)]	V
$V_{(ESD)}$	Electrostatic discharge	IEC61000-4-2 Contact discharge 150 pF, 330 Ω.	OUT, CSP, CSN/BUS, PA_CC1, PA_CC2, PA_DP, PA_DM	±2000[(3)]	V
$V_{(ESD)}$	Electrostatic discharge	IEC61000-4-2 Contact discharge 150 pF, 330 Ω.	OUT, CSP, CSN/BUS, PA_CC1, PA_CC2, PA_DP, PA_DM	±2000[(3)]	V
$V_{(ESD)}$	Electrostatic discharge	ISO 10605 Contact discharge 330 pF, 330 Ω.	OUT, CSP, CSN/BUS, PA_CC1, PA_CC2, PA_DP, PA_DM	±2000[(3)]	V
$V_{(ESD)}$	Electrostatic discharge	ISO 10605 Air-gap discharge 330 pF, 330 Ω.	OUT, CSP, CSN/BUS, PA_CC1, PA_CC2, PA_DP, PA_DM	±2000[(3)]	V

(1) AEC Q100-002 indicates that HBM stressing shall be in accordance with the ANSI/ESDA/JEDEC JS-001 specification.
(2) The passing level per AEC-Q100 Classification C2b.
(3) Test conducted on Texas Instruments evaluation board.

6.3 Recommended Operating Conditions

Over the recommended operating junction temperature range of -40°C to 150°C (unless otherwise noted)

			MIN	MAX	UNIT
V_I	Input voltage range (up to 65W output)	IN	6.8	18	V

6.3 Recommended Operating Conditions (continued)

Over the recommended operating junction temperature range of -40°C to 150°C (unless otherwise noted)

			MIN	MAX	UNIT
V_I	Input voltage range (up to 30W output)	IN	5.5	18	V
V_I	Input voltage range	EN/UVLO	0	7 (2)	V
I_I	Input current	EN/UVLO	0	1	mA
V_I	Input voltage range	LDO_5V when overdriven by external supply	4.75	5.5	V
V_I	Input voltage range	CSP, CSN/BUS	0	22	V
V_I	Input voltage range	PB_VBUS (GPIO4 when configured as PB_VBUS)	3	22	V
V_O	Output voltage range	OUT	0	21	V
V_{IO}	I/O voltage range	PA_CC1, PA_CC2, PB_CC1, PB_CC2	0	5.5	V
V_{IO}	I/O voltage range	PA_DP, PA_DM, PB_DP, PB_DM	0	3.6	V
V_{IO}	I/O voltage range	I2C_SDAn, I2C_SCLn, $\overline{IRQn}$ (n=1 or 2)	0	5.5	V
V_{IO}	I/O voltage range	GPIOn (n = 0 - 9)	0	3.6	V
V_{IO}	I/O voltage range	NTC monitor (GPIO5), SYNC (GPIO6)	0	3.6	V
I_O	Output current(1)	IOUT		5	A
I_O	Output current	PA_CC1, PA_CC2, PB_CC1, PB_CC2		225	mA
I_O	Output current (from LDO_3V3)	GPIOn (n = 0 - 9)		10	mA
fsw	Buck-boost converter switching frequency driven from SYNC pin		250	500	kHz
T_A	Ambient operating temperature		–40	125	°C
T_J	Operating junction temperature		–40	150	°C

(1) Average LC filtered output current from buck-boost power stage. Operation with I_{OUT} > 3A with V_{OUT} > 10 V may result in thermal shutdown.
(2) EN/UVLO MAX specification applies when current into pin is not externally limited.

6.4 Recommended Components

over operating free-air temperature range (unless otherwise noted)

PARAMETER (1)		VOLTAGE RATING	MIN	TYP	MAX	UNIT
C_{IN}	Capacitance on VIN	40 V	22	47		µF
C_{LDO_5V}	Capacitance on LDO_5V (supplied internally)	10 V	4.7		10	µF
C_{LDO_5V}	Capacitance on LDO_5V (supplied externally)	10 V	10	47	100	µF
C_{LDO_3V3}	Capacitance on LDO_3V3	6.3 V	4.7		10	µF
C_{LDO_1V5}	Capacitance on LDO_1V5	6.3 V	4.7		10	µF
C_{Px_CCy}	Capacitance on Px_CCy pins(2)	6.3 V	200	330	480	pF
C_{BOOT1}, C_{BOOT2}	Boot charge capacitance	10 V	0.08	0.1	0.3	µF
$R_{Snubber_SW1}$	RC snubber resistor on SW1	35 V, 0.25 W		1.1		Ω
$C_{Snubber_SW1}$	RC snubber capacitor on SW1	35 V		1		nF
$R_{Snubber_SW2}$	RC snubber resistor on SW2	35 V, 0.25 W		1.1		Ω
$C_{Snubber_SW2}$	RC snubber capacitor on SW2	35 V		3.3		nF
C_{OUT}	Capacitance on OUT (4)	35 V	30	33	40	µF

Copyright © 2026 Texas Instruments Incorporated

6.4 Recommended Components (continued)

over operating free-air temperature range (unless otherwise noted)

PARAMETER [1]		VOLTAGE RATING	MIN	TYP	MAX	UNIT
C_{BUS}	Capacitance on PA_VBUS	35 V	100	120	150	µF
L	Inductor [4]		3.3	4.7	5.6	µH
NTC	Thermistor		47		100	kΩ
$R_{EN/UVLO}$	Enable/UVLO pull up resistance		47			kΩ
TVPS pin components (C_{TVSP} || ($Damper_{R+C}$))	C_{TVSP} Capacitance on TVSP pin [3]	40 V	0.08	0.1	0.12	µF
TVPS pin components (C_{TVSP} || ($Damper_{R+C}$))	Damper resistor R of R + C network in Parallel with C_{TVSP}	0.25W	8	10	12	Ω
TVPS pin components (C_{TVSP} || ($Damper_{R+C}$))	Damper capacitor C of R + C network in Parallel with C_{TVSP}	40 V	0.376	0.47	0.564	µF
ESR_{CTVSP}	TVSP Capacitor ESR (eq series resistance)			10		mΩ
ESL_{CTVSP}	TVSP Capacitor ESL (eq series inductance)			1		nH

(1) Capacitance values do not include any derating factors. For example, if 5.0 µF is required and the external capacitor value reduces by 50% at the required operating voltage, then the required external capacitor value is 10 µF.
(2) This includes all capacitance to the Type-C receptacle.
(3) Maximum capacitance allowed on TVSP pin to allow for proper decode of device configuration during boot.
(4) See applications section for recommended L and C_{OUT} combinations.

6.5 Thermal Information

THERMAL METRIC[1]		TPS25762-Q1 Hot Rod 29 PINS	UNIT
$R_{\theta JA}$	Junction-to-ambient thermal resistance	33.3	°C/W
$R_{\theta JC(top)}$	Junction-to-case (top) thermal resistance	13.1	
$R_{\theta JB}$	Junction-to-board thermal resistance	7.3	
ψ_{JT}	Junction-to-top characterization parameter	0.3	
ψ_{JB}	Junction-to-board characterization parameter	7.2	

(1) For more information about traditional and new thermal metrics, see the Semiconductor and IC Package Thermal Metrics application report.

6.6 Buck-Boost Regulator

Typical values correspond to T_J = 25°C. Minimum and maximum limits apply over the –40°C to 150°C junction temperature range unless otherwise stated. V_{IN} = 13.5 V, $V_{EN/UVLO}$ = 2V unless otherwise stated. [1]

PARAMETER		TEST CONDITION	MIN	TYP	MAX	UNIT
SUPPLY VOLTAGE (VIN)						
I_Q	V_{IN} shutdown current	$V_{EN/UVLO}$ = 0 V			130	µA
I_Q	V_{IN} shutdown current	$V_{EN/UVLO}$ = 0 V, T_J = 85°C		55		µA
I_Q	V_{IN} operating current	$V_{EN/UVLO}$ = 2V, V_{OUT} = 5 V, I_{OUT} = 0 A		8		mA
I_Q	V_{IN} operating current	$V_{EN/UVLO}$ = 1V, V_{OUT} = 0 V, I_{OUT} = 0 A			4.5	mA
I_Q	V_{IN} operating current	$V_{EN/UVLO}$ = 2V, V_{OUT} = 0 V, I_{OUT} = 0 A			8	mA
$V_{IN(OVP_R)}$	V_{IN} rising overvoltage threshold	V_{IN} rising.	18.4	19.2	20	V
$V_{IN(OVP_F)}$	V_{IN} falling overvoltage threshold	V_{IN} falling.	18.0	18.8	19.6	V
	hysteresis			0.4		V
$V_{IN(UVLO_R)}$	V_{IN} undervoltage lockout rising	V_{IN} rising.	5.14	5.30	5.46	V

Copyright © 2026 Texas Instruments Incorporated

6.6 Buck-Boost Regulator (continued)

Typical values correspond to T_J = 25°C. Minimum and maximum limits apply over the –40°C to 150°C junction temperature range unless otherwise stated. V_{IN} = 13.5 V, $V_{EN/UVLO}$ = 2V unless otherwise stated. (1)

PARAMETER		TEST CONDITION	MIN	TYP	MAX	UNIT
$V_{IN(UVLO_F)}$	V_{IN} undervoltage lockout falling	V_{IN} falling.	5.04	5.20	5.36	V
	hysteresis			0.1		V
LDO_5V OUTPUT						
V_{LDO_5V}	LDO_5V Output Regulation voltage	7V ≤ V_{IN} ≤ 18 V, 0 < I_{LDO_5V} < 125mA, V_{EN} = 2 V.	4.5	4.63	4.75	V
$V_{LDO_5V(UVLO_R)}$	LDO_5V Undervoltage lockout rising		4.29	4.4	4.51	V
$V_{LDO_5V(UVLO_F)}$	LDO_5V Undervoltage lockout falling		4.09	4.2	4.31	V
	Undervoltage hysteresis			200		mV
$V_{LDO_5V_DO}$	drop out voltage	V_{IN} = 5.5 V; I_{LDO_5V} = 125mA	4.3			V
$I_{LDO_5V(ILIMIT)}$	LDO_5V current limit	V_{LDO_V5V} = 0 to 3.5 V, $R_{LDO_V5V_LOAD}$ = 1 Ω	125	200	400	mA
LDO_3V3 OUTPUT						
V_{LDO_3V3}	LDO_3V3 Output regulation voltage	7V ≤ V_{IN} ≤ 18 V, V_{EN} = 2 V, $V_{LDO_5V(UVLO)}$ < V_{LDO_5V} < 5.5 V, 0 < I_{LDO_3V3} < 25mA	3.4	3.5	3.6	V
$V_{LDO_3V3(UVLO_R)}$	LDO_3V3 Undervoltage lockout rising		3.2	3.3	3.4	V
$V_{LDO_3V3(UVLO_F)}$	LDO_3V3 Undervoltage lockout falling		3.05	3.15	3.25	V
	Undervoltage hysteresis			150		mV
$V_{LDO_3V3_DO}$	drop out voltage	VIN = 4.5 V, I_{LDO_3V3} = 30mA	3.3			V
$I_{LDO_3V3(ILIMIT)}$	LDO_3V3 current limit	V_{LDO_3V3} = 0 to 2.5 V, $R_{LDO_3V3_LOAD}$ = 1 Ω	35	50	80	mA
LDO_1V5 OUTPUT						
V_{LDO_1V5}	LDO_1V5 Output Regulation voltage	4.5 < V_{LDO_5V} < 5.5V, 0 < I_{LDO_1V5} < 10 mA	1.49	1.55	1.65	V
$V_{LDO_1V5(UVLO_R)}$	LDO_1V5 Undervoltage lockout rising		1.44	1.49	1.54	V
$V_{LDO_1V5(UVLO_F)}$	LDO_1V5 Undervoltage lockout falling		1.37	1.42	1.47	V
	Undervoltage hysteresis			70		mV
$I_{LDO_1V5(ILIMIT)}$	LDO_1V5 current limit	V_{LDO_1V5} = 0 to 1.2 V, $R_{LDO_1V5_LOAD}$ = 1 Ω	15	20	28	mA
EN/UVLO						
$V_{EN(LDO_V5V_R)}$	EN input level required to turn on internal LDOs	EN/UVLO rising			1.05	V
$V_{EN(LDO_V5V_F)}$	EN input level required to turn off internal LDOs	EN/UVLO falling	0.3			V
$V_{EN(OPER)}$	EN input level required to start operation	EN/UVLO rising Precision EN	1.2	1.25	1.3	V
$V_{EN(STBY)}$	EN input level required to stop operation	EN/UVLO falling	1.1	1.15	1.2	V
$V_{EN(HYS)}$	Hysteresis			100		mV
$V_{EN(CLAMP)}$	EN input clamp voltage	$V_{EN/UVLO}$ > $V_{EN(CLAMP)}$, 10 µA < $I_{EN/UVLO}$ < 1 mA	6	9	12	V
$I_{EN(LEAK)}$	Leakage current into EN pin	0 V < V_{EN} < 6 V			1	µA
OUTPUT VOLTAGE						
$V_{CSN/BUS(3V)}$	$V_{CNS/BUS}$ regulation accuracy at 3V	0 ≤ I_{OUT} ≤ 3A	2.9	3	3.1	V
$V_{CSN/BUS(5V)}$	$V_{CNS/BUS}$ regulation accuracy at 5V	0 ≤ I_{OUT} ≤ 3A	4.85	5	5.15	V
$V_{CSN/BUS(21V)}$	$V_{CNS/BUS}$ regulation accuracy at 21V	0 ≤ I_{OUT} ≤ 3A	20.48	21	21.53	V
V_{CSN/BUS_STP}	Output voltage step size (12-bit DAC)			10		mV

Copyright © 2026 Texas Instruments Incorporated

6.6 Buck-Boost Regulator (continued)

Typical values correspond to T_J = 25°C. Minimum and maximum limits apply over the –40°C to 150°C junction temperature range unless otherwise stated. V_{IN} = 13.5 V, $V_{EN/UVLO}$ = 2V unless otherwise stated. (1)

PARAMETER		TEST CONDITION	MIN	TYP	MAX	UNIT
VDAC Resolution	Resolution of V_{BUS} DAC			12		Bits
I_{DISCHG}	CSN/BUS discharge current when transitioning to VSafe0V	V_{CSP} = $V_{CSN/BUS}$. $V_{CSN/BUS}$ = 3V. Measure current into BUS.	40			mA
t_{DISCHG}	CSN/BUS discharge time when transitioning to VSafe5V	V_{BUS} = 21 V (max), CBULK = 220 µF, time to discharge BUS to < 5.5 V (per USB PD specification)			275	ms
t_{DISCHG}	CSN/BUS discharge time when transitioning to VSafe0V	V_{BUS} = 21 V (max), CBULK = 220 µF, time to discharge BUS to < 0.8 V (per USB PD specification)			650	ms
R_{DISCHG}	Weak discharge resistance on BUS pin when not sourcing VBUS	EN = 2V; measure BUS to PGND resistance.	60		135	kΩ
$R_{BUS-GND(PWR)}$	BUS to GND resistance, R_{DISCH} disabled, not sourcing VBUS	EN = 2V measure BUS to PGND resistance.	120		500	kΩ
$R_{BUS-GND(UNPWR)}$	BUS to GND resistance, unpowered	VIN = EN = 0V measure BUS to PGND resistance.		2		kΩ
CABLE VOLTAGE DROP COMPENSATION						
V_{OUT_CDC}	ΔV_{OUT} increase vs I_{OUT}	Gain setting = 0.1V/A: V_{CSP} - $V_{CSN/BUS}$ = 50 mV	465	500	535	mV
V_{OUT_CDC}	ΔV_{OUT} increase vs I_{OUT}	Gain setting = 0.1V/A: V_{CSP} - $V_{CSN/BUS}$ = 10 mV	85	100	115	mV
V_{OUT_CDC}	ΔV_{OUT} increase vs I_{OUT}	Gain setting = 0.075V/A: V_{CSP} - $V_{CSN/BUS}$ = 50 mV	346	375	404	mV
V_{OUT_CDC}	ΔV_{OUT} increase vs I_{OUT}	Gain setting = 0.075V/A: V_{CSP} - $V_{CSN/BUS}$ = 10 mV	61	75	89	mV
V_{OUT_CDC}	ΔV_{OUT} increase vs I_{OUT}	Gain setting = 0.05V/A: V_{CSP} - $V_{CSN/BUS}$ = 50 mV	227	250	273	mV
V_{OUT_CDC}	ΔV_{OUT} increase vs I_{OUT}	Gain setting = 0.05V/A: V_{CSP} - $V_{CSN/BUS}$ = 10 mV	37	50	63	mV
V_{OUT_CDC}	ΔV_{OUT} increase vs I_{OUT}	Gain setting = 0.025V/A: V_{CSP} - $V_{CSN/BUS}$ = 50 mV	109	125	141	mV
V_{OUT_CDC}	ΔV_{OUT} increase vs I_{OUT}	Gain setting = 0.025V/A: V_{CSP} - $V_{CSN/BUS}$ = 10 mV	14	25	36	mV
V_{OUT_CDC}	ΔV_{OUT} increase vs I_{OUT}	Gain setting = 0V/A: 0 mV ≤ V_{CSP} - $V_{CSN/BUS}$ ≤ 50 mV	-5		20	mV
BUCK-BOOST PEAK CURRENT LIMITS						
$I_{PEAK(BOOST)}$	Boost peak current limit (in boost mode)		12.3	14.5	16.7	A
$I_{PEAK(BOOST)}$	Boost peak current limit (in boost mode)		10.8	12.8	14.7	A
$I_{PEAK(BOOST)}$	Boost peak current limit (in boost mode)		9.3	11.0	12.6	A
$I_{PEAK(BOOST)}$	Boost peak current limit (in boost mode)		7.9	9.3	10.6	A
$I_{PEAK(BOOST)}$	Boost peak current limit (in boost mode)		6.3	7.5	8.6	A
$I_{PEAK(BOOST)}$	Boost peak current limit (in boost mode)		4.8	5.7	6.5	A
$I_{PEAK(BUCK)}$	Buck peak current limit (in buck mode)		8.2	9.7	11.2	A
$I_{PEAK(BUCK)}$	Buck peak current limit (in buck mode)		9.0	10.6	12.1	A
$I_{PEAK(BUCK)}$	Buck peak current limit (in buck mode)		9.7	11.4	13.1	A
$I_{PEAK(BUCK)}$	Buck peak current limit (in buck mode)		10.4	12.3	14.1	A
$I_{PEAK(BUCK)}$	Buck peak current limit (in buck mode)		5.3	6.2	7.2	A

Copyright © 2026 Texas Instruments Incorporated

6.6 Buck-Boost Regulator (continued)

Typical values correspond to T_J = 25°C. Minimum and maximum limits apply over the –40°C to 150°C junction temperature range unless otherwise stated. V_{IN} = 13.5 V, $V_{EN/UVLO}$ = 2V unless otherwise stated. (1)

PARAMETER		TEST CONDITION	MIN	TYP	MAX	UNIT
$I_{PEAK(BUCK)}$	Buck peak current limit (in buck mode)		6	7.1	8.2	A
$I_{PEAK(BUCK)}$	Buck peak current limit (in buck mode)		6.8	8.0	9.1	A
$I_{PEAK(BUCK)}$	Buck peak current limit (in buck mode)		7.5	8.8	10.1	A
$I_{NEG(BUCK)}$	Buck negative current limit (in buck mode)		-4.6	- 3.8	-3	A
OUT CURRENT DAC						
IDAC_Resolution				8		Bits
CURRENT LIMIT						
I_{LIMIT_LO}	Current limit accuracy	1 A ≤ I_{OUT} ≤ 3 A, $V_{CSN/BUS}$ < 2.5 V; R_S = 10 mΩ.	-250		250	mA
I_{LIMIT_LO}	Current limit accuracy < 1 A	1 A ≤ I_{OUT} ≤ 3 A, $V_{CSN/BUS}$ ≥ 2.5 V; R_S = 10 mΩ	-150		150	mA
I_{LIMIT_HI}	Current limit accuracy > 3 A	I_{OUT} > 3 A, $V_{CSN/BUS}$ < 2.5 V; R_S = 10 mΩ	-20		20	%
I_{LIMIT_HI}	Current limit accuracy > 3 A	I_{OUT} > 3 A, $V_{CSN/BUS}$ ≥ 2.5 V; R_S = 10 mΩ	-5		5	%
I_{LIMIT_MIN}	Minimum programmable current limit		1			A
I_{CL_STEP}	Current limit step size	1 A ≤ I_{OUT} ≤ 5 A; R_S = 10 mΩ		50		mA
FREQUENCY						
$f_{SW(1)}$	Switching Frequency 1		285	300	315	kHz
$f_{SW(2)}$	Switching Frequency 2		380	400	420	kHz
$f_{SW(3)}$	Switching Frequency 3		428	450	473	kHz
FREQUENCY DITHER						
FS_{SS}	Positive frequency deviation during dither		8	10	12	%
	Negative frequency deviation during dither		-12	-10	-8	%
FS_{SS_MOD}	Modulation frequency of dither	DITHER_FREQ = 0	9	10	11	kHz
FS_{SS_MOD}	Modulation frequency of dither	DITHER_FREQ = 1	22.5	25	27.5	kHz
OVERVOLTAGE PROTECTION						
V_{CSN/BUS_OVP_R}	Fixed output overvoltage threshold at CSN/BUS pin		22.0	23	24	V
V_{CSN/BUS_OVP_F}	Falling		20.5	21.5	22.5	V
	Hysteresis			1.5		V
POWER SWITCHES						
$R_{DS(ON)}$	M1	V_{IN} = 12V; (V_{BOOT1} - V_{SW1}) = 4.5V; I_{SW1} = -1 A		4.5		mΩ
$R_{DS(ON)}$	M2	V_{IN} = 12V; I_{SW1} = 1 A		20		mΩ
$R_{DS(ON)}$	M4	V_{IN} = 12V; I_{SW2} = 1 A		6		mΩ
$R_{DS(ON)}$	M3 + M5	V_{IN} = V_{OUT} = 12V: (V_{BOOT2} - V_{SW2}) = 4.5V, I_{SW2} = -1 A		18		mΩ
$V_{UV_BOOT1_R}$	BOOT1 to SW1 rising UVLO threshold		3.5	4	4.4	V
$V_{UV_BOOT1_F}$	BOOT1 to SW1 falling UVLO threshold		2.9	3.4	3.7	V
	BOOT1 to SW1 UVLO hysteresis			680		mV
$V_{OV_BOOT1_R}$	BOOT1 to SW1 rising OVP threshold		4.6	5.3	5.9	V
$V_{OV_BOOT1_F}$	BOOT1 to SW1 falling OVP threshold		4.3	5	5.6	V

Copyright © 2026 Texas Instruments Incorporated

6.6 Buck-Boost Regulator (continued)

Typical values correspond to T_J = 25°C. Minimum and maximum limits apply over the –40°C to 150°C junction temperature range unless otherwise stated. V_{IN} = 13.5 V, $V_{EN/UVLO}$ = 2V unless otherwise stated. (1)

PARAMETER		TEST CONDITION	MIN	TYP	MAX	UNIT
	BOOT 1 OVP hysteresis		250	300	350	mV
$V_{UV_BOOT2_R}$	BOOT2 to SW2 rising UVLO threshold		3.5	4	4.4	V
$V_{UV_BOOT2_F}$	BOOT2 to SW2 falling UVLO threshold		2.9	3.4	3.7	V
	BOOT2 to SW2 UVLO hysteresis			680		mV
$V_{OV_BOOT2_R}$	BOOT2 to SW2 rising OVP threshold		4.6	5.3	5.9	V
$V_{OV_BOOT2_F}$	BOOT2 to SW2 falling OVP threshold		4.3	5	5.6	V
	BOOT2 OVP hysteresis		250	300	350	mV
BUCK-BOOST CHARACTERISTICS						
t_{SS}	Soft-start time			6		ms

(1) All minimum and maximum limits are specified by correlating the electrical characteristics to process and temperature variations and applying statistical process control.

6.7 CC Cable Detection Parameters

Typical values correspond to TJ = 25°C. Minimum and maximum limits apply over the –40°C to 150°C junction temperature range unless otherwise stated. V_{IN} = 13.5 V, EN =2 V, unless otherwise stated.

PARAMETER		TEST CONDITIONS	MIN	TYP	MAX	UNIT
Type-C Source (Rp pull-up)						
$V_{OC_3.3}$	Unattached Px_CCy open circuit voltage while Rp enabled, no load	R_{CC} = 47 kΩ	1.85			V
V_{OC_5}	Attached Px_CCy open circuit voltage while Rp enabled, no load	R_{CC} = 47 kΩ	2.95			V
I_{Rev}	Unattached reverse current on Px_CCy	V_{CCy} = 5.5V, V_{CCx} = 0V, measure current into CCy			10	µA
I_{RpStd}	current source - Standard	0 < V_{CCy} < 1.0 V, measure I_{CCy}	64	80	96	µA
$I_{Rp1.5}$	current source - 1.5A	0 < V_{CCy} < 1.5 V, measure I_{CCy}	166	180	194	µA
$I_{Rp3.0}$	current source - 3.0A	0 < V_{CCy} < 2.45 V, measure I_{CCy}	304	330	356	µA
Type-C Sink (Rd pull-down)						
R_{SNK}	Rd pulldown resistance	0V ≤ V_{Px_CCy} ≤ 2.1 V, measure resistance on Px_CCy	4.6		5.6	kΩ
R_{VCONN_DIS}	VCONN discharge resistance	0V ≤ V_{Px_CCy} ≤ 5.5 V, measure resistance on Px_CCy	4.0		6.6	kΩ
Common (Source and Sink)						
t_{CC}	deglitch time for comparators on Px_CCy, which applies to V_{SRC1}, V_{SRC2}, V_{SRC3}, V_{SNK1}, V_{SNK2}, V_{SNK3}, and V_{SNK4}.			2.56		ms

6.8 CC VCONN Parameters

Typical values correspond to T_J = 25°C. Minimum and maximum limits apply over the –40°C to 150°C junction temperature range unless otherwise stated. V_{IN} = 13.5 V, EN = 2 V unless otherwise stated.

PARAMETER		TEST CONDITIONS	MIN	TYP	MAX	UNIT
R_{PP_CABLE}	Rdson of the VCONN path	V_{LDO_5V} = 5V, I_L = 200 mA, measure resistance from LDO_5V to Px_CCy			1.2	Ω

6.8 CC VCONN Parameters (continued)

Typical values correspond to T_J = 25°C. Minimum and maximum limits apply over the –40°C to 150°C junction temperature range unless otherwise stated. V_{IN} = 13.5 V, EN = 2 V unless otherwise stated.

PARAMETER		TEST CONDITIONS	MIN	TYP	MAX	UNIT
I_{LIMVC}	short circuit current limit	setting 0, V_{LDO_5V} = 5V, R_L=10mΩ , measure I_{Px_CCy}	30	50	70	mA
		setting 1, V_{LDO_5V} = 5V, R_L=10mΩ , measure I_{Px_CCy}	235	275	315	
I_{CCyLKG}	Leakage current into Px_Cy pins	VCONN disabled, T_J ≤ 125 ºC, V_{Px_CCy} = 5.5 V, measure I_{Px_CCy}	-1	0	10	µA
V_{VC_OVP}	Overvoltage protection threshold for Px_CCy	V_{LDO_5V} rising	5.6	5.9	6.2	V
V_{VC_RCP}	Reverse current protection threshold for Px_CCy, sourcing VCONN through CCx	V_{LDO_5V} = 5 V, V_{CCx} rising, setting 1.	230	310	390	mV
V_{VC_RCP}	Reverse current protection threshold for Px_CCy, sourcing VCONN through CCx	V_{LDO_5V} = 5 V, V_{CCx} rising, setting 2.	60	155	250	mV
$t_{PP_CABLE_FSD}$	Time to disable Px_Cy VCONN after V_{LDO_5V} > V_{VC_OVP} or V_{CCx} - V_{LDO_5V} > V_{VC_RCP}	C_L=0		1.5		µs
$t_{PP_CABLE_off}$	from disable signal to Px_CCy at 10% of final value	I_L = 200 mA, V_{LDO_5V} = 5V, C_L=0	100	225	300	µs
$t_{iOS_PP_CABLE}$	response time to short circuit	External V_{LDO_5V} = 5V, for short circuit R_L = 10mΩ. Set VCONILIM = 1.			2	µs
$t_{iOS_PP_CABLE}$	response time to short circuit	Internal V_{LDO_5V} = 5V, for short circuit R_L = 10mΩ. Set VCONILIM = 0.			0.3	µs

6.9 CC PHY Parameters

Typical values correspond to T_J = 25°C. Minimum and maximum limits apply over the –40°C to 150°C junction temperature range unless otherwise stated. V_{IN} = 13.5 V, EN = 2V unless otherwise stated.

PARAMETER		TEST CONDITIONS	MIN	TYP	MAX	UNIT
Transmitter						
V_{TXHI}	Transmit high voltage on Px_CCy	Standard External load	1.05	1.125	1.2	V
V_{TXLO}	Transmit low voltage on Px_CCy	Standard External load	-75		75	mV
Z_{DRIVER}	Transmit output impedance while driving the CC line using Px_CCy	measured at 750 kHz	33		75	Ω
t_{Rise}	Rise time. 10 % to 90 % amplitude points on Px_CCy, minimum is under an unloaded condition. Maximum set by TX mask	C_{Px_CCy}= 520 pF	300			ns
t_{Fall}	Fall time. 90 % to 10 % amplitude points on Px_CCy, minimum is under an unloaded condition. Maximum set by TX mask	C_{Px_CCy}= 520 pF	300			ns

Copyright © 2026 Texas Instruments Incorporated

6.9 CC PHY Parameters (continued)

Typical values correspond to T_J = 25°C. Minimum and maximum limits apply over the –40°C to 150°C junction temperature range unless otherwise stated. V_{IN} = 13.5 V, EN = 2V unless otherwise stated.

PARAMETER		TEST CONDITIONS	MIN	TYP	MAX	UNIT
V_{PHY_OVP}	OVP detection threshold for USB PD PHY.	Initially V_{CC1} ≤ 5.5 V and V_{CC2} ≤ 5.5 V, then V_{CCx} rises.	5.5		8.5	V
Receiver						
Z_{BMCRX} (2)	Receiver input impedance on Px_CCy	Does not include pull-up or pulldown resistance from cable detect. Transmitter is Hi-Z.	1			MΩ
C_{CC}	Receiver capacitance on Px_CCy(1)	Capacitance looking into the CC pin when in receiver mode			120	pF
$V_{RX_SNK_R}$	Rising threshold on Px_CCy for receiver comparator	sink mode (rising)	499	525	551	mV
$V_{RX_SRC_R}$	Rising threshold on Px_CCy for receiver comparator	source mode (rising)	784	825	866	mV
$V_{RX_SNK_F}$	Falling threshold on Px_CCy for receiver comparator	sink mode (falling)	230	250	270	mV
$V_{RX_SRC_F}$	Falling threshold on Px_CCy for receiver comparator	source mode (falling)	523	550	578	mV

(1) C_{CC} includes only the internal capacitance on a Px_CCy pin when the pin is configured to be receiving BMC data. External capacitance is needed to meet the required minimum capacitance per the USB-PD Specifications (cReceiver). Therefore, TI recommends adding C_{Px_CCy} externally.
(2) Specified by design; not production tested.

6.10 Thermal Shutdown Characteristics

over operating free-air temperature range (unless otherwise noted)

PARAMETER		TEST CONDITIONS	MIN	TYP	MAX	UNIT
T_{SD_BB}	Temperature shutdown threshold	Temperature rising	160	167	175	°C
T_{SD_HYS}	Temperature shutdown hysteresis	hysteresis		18		°C
$T_{SD_PA_VCONN}$	Temperature shutdown threshold	Temperature rising	152	166	179	°C
T_{SD_HYS}	Temperature shutdown hysteresis	hysteresis		20		°C
$T_{SD_PA_VBUS_DISCH}$	Temperature shutdown threshold	Temperature rising	155	166	177	°C
T_{SD_HYS}	Temperature shutdown hysteresis	hysteresis		20		°C
T_{SD_LDO5V}	Temperature shutdown threshold	Temperature rising	165	177	188	°C
T_{SD_HYS}	Temperature shutdown hysteresis	hysteresis		15		°C

6.11 Oscillator Characteristics

Typical values correspond to TJ = 25°C. Minimum and maximum limits apply over the –40°C to 150°C junction temperature range unless otherwise stated. V_{IN} = 13.5 V, EN =2 V, unless otherwise stated.

PARAMETER		TEST CONDITIONS	MIN	TYP	MAX	UNIT
$F_{OSC(100K)}$	100KHz oscillator	Trimmed.	89	103	111	kHz

Copyright © 2026 Texas Instruments Incorporated

6.11 Oscillator Characteristics (continued)

Typical values correspond to TJ = 25°C. Minimum and maximum limits apply over the –40°C to 150°C junction temperature range unless otherwise stated. V_{IN} = 13.5 V, EN =2 V, unless otherwise stated.

PARAMETER		TEST CONDITIONS	MIN	TYP	MAX	UNIT
$F_{OSC(24M)}$	24MHz oscillator	Trimmed. 0 ℃ ≤ T_A ≤ 70 ℃	23.64	24.2	24.36	MHz
$F_{OSC(24M)}$	24MHz oscillator	Trimmed. -40 ℃ ≤ T_A ≤ 150 ℃	23.3	24.2	24.5	MHz

6.12 ADC Characteristics

Typical values correspond to TJ = 25°C. Minimum and maximum limits apply over the –40°C to 150°C junction temperature range unless otherwise stated. V_{IN} = 13.5 V, EN =2 V, unless otherwise stated.

PARAMETER		TEST CONDITIONS	MIN	TYP	MAX	UNIT
LSB	least significant bit	3.6V max scaling, voltage divider of 3		14		mV
LSB	least significant bit	25.2V max scaling, voltage divider of 21		98		mV
LSB	least significant bit	(V_{CSP} - $V_{CSN/BUS}$)= 10 mV, 30 mV		27		mA
E_G	Gain error	0 A ≤ I_{TVSP} ≤ 0.9 mA	–2.7		2.7	%
E_G	Gain error	0.05V ≤ V_{GPIOx} ≤ 3.6V, V_{GPIOx} ≤ V_{LDO_3V3}	–2.7		2.7	%
E_G	Gain error	2.7V ≤ V_{LDO_3V3} ≤ 3.6V	–2.4		2.4	%
E_G	Gain error	0.6V ≤ V_{Px_VBUS} ≤ 22V	–2.4		2.4	%
E_G	Gain error, current sense	(V_{CSP} - $V_{CSN/BUS}$)= 10 mV, 30 mV	–2.4		2.4	%
E_G	Gain error	V_{IN}	–2.4		2.4	%
E_G	Gain error	4.3 V ≤ V_{LDO_5V} ≤ 5.5V	–2.4		2.4	%
$V_{OS(E)}$	Offset error(1)	0 A ≤ I_{TVSP} ≤ 0.9 mA	–4.1		15	mV
$V_{OS(E)}$	Offset error(1)	0.05V ≤ V_{GPIOx} ≤ 3.6V, V_{GPIOx} ≤ V_{LDO_3V3}	–4.1		4.1	mV
$V_{OS(E)}$	Offset error(1)	2.7V ≤ V_{LDO_3V3} ≤ 3.6V	-4.1		4.1	mV
$V_{OS(E)}$	Offset error(1)	0.6V ≤ V_{Px_VBUS} ≤ 22V	-4.1		4.1	mV
$V_{OS(E)}$	Offset error(1)	(V_{CSP} - $V_{CSN/BUS}$)= 10 mV, 30 mV	-4.5		4.5	mA
$V_{OS(E)}$	Offset error(1)	V_{IN}	-4.1		4.1	mV
$V_{OS(E)}$	Offset error(1)	4.3 V ≤ V_{LDO_5V} ≤ 5.5V	-4.1		4.1	mV

(1) The offset error is specified after the voltage divider.

6.13 TVSP Parameters

VIN = 13.5V, EN = 2V. Over operating free-air temperature range (unless otherwise noted)

PARAMETER		TEST CONDITIONS	MIN	TYP	MAX	UNIT
TVSP						
V_{TVSP_PU}	Pull up voltage for configuration (1)	0 < I_{TVSP} < 1 mA	5.3	5.5	5.7	V
Decode 0	Device configuration decode	R_{TVSP} = Open			1	µA
Decode 1	Device configuration decode	R_{TVSP} = 93.1 kΩ	56.9		61.2	µA
Decode 2	Device configuration decode	R_{TVSP} = 47.5 kΩ	111.6		120	µA

Copyright © 2026 Texas Instruments Incorporated

6.13 TVSP Parameters (continued)

VIN = 13.5V, EN = 2V. Over operating free-air temperature range (unless otherwise noted)

PARAMETER		TEST CONDITIONS	MIN	TYP	MAX	UNIT
Decode 3	Device configuration decode	R_{TVSP} = 29.4 kΩ - TPS257xxC-Q1, R_{TVSP} = 26.7 kΩ - TPS257xxD/F-Q1	180.3		193.9	µA
Decode 4	Device configuration decode	R_{TVSP} = 20.0 kΩ - TPS257xxC-Q1, R_{TVSP} = 18.2 kΩ - TPS257xxD/F-Q1	265		285	µA
Decode 5	Device configuration decode	R_{TVSP} = 14.7 kΩ - TPS257xxC-Q1, R_{TVSP} = 13.0 kΩ - TPS257xxD/F-Q1	360.5		387.8	µA
Decode 6	Device configuration decode	R_{TVSP} = 11.0 kΩ - TPS257xxC-Q1, R_{TVSP} = 9.53 kΩ - TPS257xxD/F-Q1	481.8		518.2	µA
Decode 7	Device configuration decode	R_{TVSP} = 8.45 kΩ - TPS257xxC-Q1, R_{TVSP} = 7.5 kΩ - TPS257xxD/F-Q1	627.2		674.6	µA
Decode 8	Device configuration decode	R_{TVSP} = 6.65 kΩ - TPS257xxC-Q1, R_{TVSP} = 5.6 kΩ - TPS257xxCA-Q1 and TPS257xxD/F-Q1	797		857.1	µA
$I_{TVSP(ILIMIT)}$	Current limit when TVSP is sourcing.	C_{TVSP} = open; R_{TVSP} = open. All Px_Dy = 0 V and Px_CCy = 0 V. V_{TVSP} = 0 V. Measure current flowing out of TVSP.	1.1	1.44	1.83	mA

(1) For proper device configuration, V_{IN} must be ≥ 7.6 V at time of configuration read.

6.14 Input/Output (I/O) Characteristics

Typical values correspond to TJ = 25°C. Minimum and maximum limits apply over the –40°C to 150°C junction temperature range unless otherwise stated. V_{IN} = 13.5 V, EN =2 V, unless otherwise stated.

PARAMETER		TEST CONDITIONS	MIN	TYP	MAX	UNIT
GPIO0-9 (Inputs) (1)						
V_{IH}	GPIOx high-level input voltage		1.3			V
V_{IL}	GPIOx low-level input voltage				0.54	V
	GPIOx input hysteresis voltage		0.09			V
$I_{I(LEAKAGE)}$	GPIOx leakage current	V_{GPIOx} = 5.5 V	–8		8	µA
R_{PU}	GPIOx internal pull-up	pull-up enabled	50	100	150	kΩ
R_{PD}	GPIOx internal pull-down	pull-down enabled	50	100	150	kΩ
t_{DG}	GPIOx input deglitch			20		ns
GPIO 2, 3, 5, 6 (Outputs)						
V_{OH}	GPIOx output high voltage	I_{GPIOx}= -5mA	2.9			V
V_{OL}	GPIOx output low voltage	I_{GPIOx}=5mA			0.4	V
GPIO 0, 1, 4, 7, 8, 9 (Outputs) (2)						
V_{OH}	GPIOx output high voltage	I_{GPIOx}= -2mA	2.9			V
V_{OL}	GPIOx output low voltage	I_{GPIOx}=2mA			0.4	V
SYNC OUT						
ϕ shift_00	GPIOx when configured as phase shifted DC/DC fsw clock output	Phase difference between fsw and GPIO6 when configured as SYNC(O).		0		degrees
ϕ shift_90	GPIOx when configured as phase shifted DC/DC fsw clock output	Phase difference between fsw and GPIO6 when configured as SYNC(O).		90		degrees

6.14 Input/Output (I/O) Characteristics (continued)

Typical values correspond to TJ = 25°C. Minimum and maximum limits apply over the –40°C to 150°C junction temperature range unless otherwise stated. V_{IN} = 13.5 V, EN =2 V, unless otherwise stated.

PARAMETER		TEST CONDITIONS	MIN	TYP	MAX	UNIT
ϕ shift_120	GPIOx when configured as phase shifted DC/DC fsw clock output	Phase difference between fsw and GPIO6 when configured as SYNC(O).		120		degrees
ϕ shift_180	GPIOx when configured as phase shifted DC/DC fsw clock output	Phase difference between fsw and GPIO6 when configured as SYNC(O).		180		degrees
SYNC IN						
$f_{SYNC(300kHz)}$	Valid external clock frequency ($f_{SW_internal}$ = 300kHz)		250		353	kHz
$f_{SYNC(400kHz)}$	Valid external clock frequency ($f_{SW_internal}$ = 400kHz)		334		470	kHz
$f_{SYNC(450kHz)}$	Valid external clock frequency ($f_{SW_internal}$ = 450kHz)		376		530	kHz
LSGD						
I_{LSGD_ON}	NFET driver sourcing current	0 V ≤ $V_{CSN/BUS}$ ≤ 21 V; 0 V ≤ (V_{LSGD} - $V_{CSN/BUS}$) ≤ 4 V	10	13	16	µA
V_{LSGD_ON}	Sourcing voltage while enabled (V_{LSGD} - $V_{CSN/BUS}$)	0 V ≤ $V_{CSN/BUS}$ ≤ 21 V; I_{LSGD} ≤ 4 µA. Measure voltage between LSGD and CSN/BUS.	6		8	V
R_{LSGD_OFF}	Sinking resistance when disabled	V_{LSGD} = $V_{CSN/BUS}$ = 5 V		160	300	kΩ

(1) GPIO9 is normally configured as I2C_IRQ1m (controller): input pin. I2C specification requires use of external pullup resistor. Input thresholds (V_{IH}; V_{IL}) leakage current ($I_{I(LEAKAGE)}$)and deglitch timing (t_{DG}) specifications apply when used as I2C_IRQ1m. Internal pullup and pulldown resistors are not used during this mode of operation.
(2) GPIO9 or GPIO1 may be configured as I2C_IRQ2s (target): open-drain output pin. I2C specification requires use of external pullup resistor. Output threshold (V_{OL}) applies. Internal pullup and pulldown resistors are not used during this mode of operation.

6.15 BC1.2 Characteristics

Typical values correspond to TJ = 25°C. Minimum and maximum limits apply over the –40°C to 150°C junction temperature range unless otherwise stated. V_{IN} = 13.5 V, EN =2 V, unless otherwise stated.

PARAMETER		TEST CONDITIONS	MIN	TYP	MAX	UNIT
BC1.2 RESISTANCES						
R_{DCP_DAT}	Dedicated Charging Port Resistance between Px_DP and Px_DM	V_{Px_DP} = 0.6 V, V_{Px_DM} = 0V, measure DP to DM shorted resistance			200	Ω
$R_{DM_DWN_15k}$	Px_DM line pulldown resistance	V_{Px_DM} = 3.6V	12	15	18	kΩ
$R_{DM_DWN_20k}$	Px_DM line pulldown resistance	V_{Px_DM} = 3.6V	14.25	19.53	24.8	kΩ
DIVIDER MODES						
$V_{2.7V}$	Output Voltage on DPy pin	No load on DPy pin	2.57	2.7	2.83	V
$V_{2.7V}$	Output Voltage on DMy pin	No load on DMy pin	2.57	2.7	2.83	V
$R_{2.7V}$	Output Impedance on DPy	5µA pulled from DPy pin	24	30	36	kΩ
$R_{2.7V}$	Output Impedance on DMy	5µA pulled from DMy pin	24	30	36	kΩ
$V_{1.2V}$	Output Voltage on DMy	No load on DMy	1.12	1.2	1.28	V
$R_{1.2V}$	Output Impedance on DMy	5µA pulled from DMy	80	102	130	kΩ
HVDCP THRESHOLD VOLTAGES						
V_{DAT_REF}	Data detection voltage on DP or DM pin		0.25	0.325	0.4	V
V_{SEL_REF}	Output selection voltage DP or DM pin		1.8	2	2.2	V
DP AND DM OVERVOLTAGE PROTECTION						

Copyright © 2026 Texas Instruments Incorporated

6.15 BC1.2 Characteristics (continued)

Typical values correspond to TJ = 25°C. Minimum and maximum limits apply over the –40°C to 150°C junction temperature range unless otherwise stated. V_{IN} = 13.5 V, EN =2 V, unless otherwise stated.

PARAMETER		TEST CONDITIONS	MIN	TYP	MAX	UNIT
V_{Dy_OVP}	OVP detection threshold for USB Px_DP and Px_DM pins	Initially V_{PxDy} ≤ 3.6 V, then V_{Px_Dy} rises.	5.5		8.5	V

6.16 I2C Requirements and Characteristics

Typical values correspond to TJ = 25°C. Minimum and maximum limits apply over the –40°C to 150°C junction temperature range unless otherwise stated. V_{IN} = 13.5 V, EN =2 V, unless otherwise stated. V_{DD} = I2C pullup voltage (3.3 V or 1.8 V)

PARAMETER		TEST CONDITIONS	MIN	TYP	MAX	UNIT
$\overline{\text{I2C_IRQ1s}}$, $\overline{\text{I2C_IRQ2}}$						
$\overline{\text{I2C_IRQ1m}}$						
SDA and SCL Characteristics (Standard, Fast, Fast-mode Plus)						
V_{IL}	Input low signal				0.54	V
V_{IH}	Input high signal		1.3			V
V_{DD} = 3.3 V INPUT LOGIC THRESHOLDS						
V_{IL}	Input low signal				0.9	V
V_{IH}	Input high signal		2.31			V
V_{HYS}	Input hysteresis		0.165			V
V_{OL}	Output low voltage	V_{DD} = 1.8V, I_{OL}=2 mA			0.36	
V_{OL}	Output low voltage	V_{DD} = 3.3V, I_{OL}=3 mA			0.4	V
I_{OL}	Max output low current	V_{OL}=0.4 V	12			mA
I_{LEAK}	Input leakage current	Voltage on pin = 3.3V	–5		5	µA
C_I	pin capacitance (internal)				10	pF
C_b	Capacitive load for each bus line (external). Applies in Standard-mode and Fast-mode.				400	pF
C_b	Capacitive load for each bus line (external). Applies in Fast-mode Plus.				550	pF
COMMON TIMING						
t_{SP}	I2C pulse width suppressed				50	ns
SDA and SCL Characteristics (Standard Mode)						
f_{SCLS}	Clock frequency (target)	V_{DD} = 1.8V or 3.3V			100	kHz
$t_{HD;STA}$	Start or repeated start condition hold time	V_{DD} = 1.8V or 3.3V	4			µs
t_{LOW}	SCL Clock low time	V_{DD} = 1.8V or 3.3V	4.7			µs
t_{HIGH}	SCL Clock high time	V_{DD} = 1.8V or 3.3V	4			µs
$t_{SU;STA}$	Start or repeated start condition setup time	V_{DD} = 1.8V or 3.3V	4.7			µs
$t_{HD;DAT}$	Serial data hold time (1)	V_{DD} = 1.8V or 3.3V	0 (2)		- (3)	ns
$t_{SU;DAT}$	Serial data setup time	V_{DD} = 1.8V or 3.3V	250			ns
t_r	Rise time of SCL and SDA signals	V_{DD} = 1.8V or 3.3V; R_{PU} = 2.8 kΩ; Cb = 400pF; measure 0.3 × V_{DD} to 0.7 × V_{DD}			1000	ns
t_{of}	Output fall time from $V_{IH(MIN)}$ to $V_{IL(MAX)}$	V_{DD} = 1.8V or 3.3V; measure 0.3 × V_{DD} to 0.7 × V_{DD}			250 (4)	ns
t_f	Fall time of SCL and SDA signals (2) (4) (5)	V_{DD} = 1.8V, R_{PU} = 2.8 kΩ; 10 pF ≤ C_b ≤ 400 pF			300	ns

6.16 I2C Requirements and Characteristics (continued)

Typical values correspond to TJ = 25°C. Minimum and maximum limits apply over the –40°C to 150°C junction temperature range unless otherwise stated. V_{IN} = 13.5 V, EN =2 V, unless otherwise stated. V_{DD} = I2C pullup voltage (3.3 V or 1.8 V)

PARAMETER		TEST CONDITIONS	MIN	TYP	MAX	UNIT
t_f	Fall time of SCL and SDA signals (2) (4) (5)	V_{DD} = 3.3V, R_{PU} = 2.8 kΩ; 10 pF ≤ C_b ≤ 400 pF			300	ns
$t_{SU;STO}$	Stop condition setup time	V_{DD} = 1.8V or 3.3V	4			µs
t_{BUF}	Bus free time between stop and start	V_{DD} = 1.8V or 3.3V	4.7			µs
$t_{VD;DAT}$	Valid data time (6)	Transmitting Data; V_{DD} = 1.8V or 3.3V, SCL low to SDA output valid			3.45 (3)	µs
$t_{VD;ACK}$	Valid data time of ACK condition	Transmitting Data; V_{DD} = 1.8V or 3.3V, ACK signal from SCL low to SDA valid			3.45 (3)	µs
SDA and SCL Characteristics (Fast Mode)						
f_{SCLS}	Clock frequency (target)	V_{DD} = 1.8V or 3.3V			400	kHz
$t_{HD;STA}$	Start or repeated start condition hold time	V_{DD} = 1.8V or 3.3V	0.6			µs
t_{LOW}	SCL Clock low time	V_{DD} = 1.8V or 3.3V	1.3			µs
t_{HIGH}	SCL Clock high time	V_{DD} = 1.8V or 3.3V	0.6			µs
$t_{SU;STA}$	Start or repeated start condition setup time	V_{DD} = 1.8V or 3.3V	0.6			µs
$t_{HD;DAT}$	Serial data hold time (1)	V_{DD} = 1.8V or 3.3V	0 (2)		- (3)	ns
$t_{SU;DAT}$	Serial data setup time	V_{DD} = 1.8V or 3.3V	100 (7)			ns
t_r	Rise time of SCL and SDA signals	V_{DD} = 1.8V or 3.3V; R_{PU} = 850 Ω; C_b = 400 pF; measure 0.3 × V_{DD} to 0.7 × V_{DD}	20		300	ns
t_{of}	Output fall time from $V_{IH(MIN)}$ to $V_{IL(MAX)}$	V_{DD} = 1.8V; measure 0.3 × V_{DD} to 0.7 × V_{DD}	6.55		250 (4)	ns
t_{of}	Output fall time from $V_{IH(MIN)}$ to $V_{IL(MAX)}$	V_{DD} = 3.3V; measure 0.3 × V_{DD} to 0.7 × V_{DD}	12		250 (4)	ns
t_f	Fall time of SCL and SDA signals (2) (4) (5)	V_{DD} = 1.8V; R_{PU} = 850 Ω; 10 pF ≤ C_b ≤ 400 pF	6.55		300	ns
t_f	Fall time of SCL and SDA signals (2) (4) (5)	V_{DD} = 3.3V; R_{PU} = 850 Ω; 10 pF ≤ C_b ≤ 400 pF	12		300	ns
$t_{SU;STO}$	Stop condition setup time	V_{DD} = 1.8V or 3.3V	0.6			µs
t_{BUF}	Bus free time between stop and start	V_{DD} = 1.8V or 3.3V	1.3			µs
$t_{VD;DAT}$	Valid data time (6)	Transmitting Data; V_{DD} = 1.8V or 3.3V, SCL low to SDA output valid			0.9 (3)	µs
$t_{VD;ACK}$	Valid data time of ACK condition	Transmitting Data; V_{DD} = 1.8V or 3.3V, ACK signal from SCL low to SDA (out) low			0.9 (3)	µs

(1) $t_{HD;DAT}$ = the data hold time that is measured from the falling edge of SCL, applies to data in transmission and the acknowledge.
(2) A device must internally provide a hold time of at least 300 ns for the SDA signal (with respect to the $V_{IH(MIN)}$ of the SCL signal) to bridge the undefined region of the falling edge of SCL.
(3) The maximum $t_{HD;DAT}$ can be 3.45 µs and 0.9 µs for Standard-mode and Fast-mode, but must be less than the maximum $t_{VD;DAT}$ or $t_{VD;ACK}$ by a transition time. This maximum must only be met if the device does not stretch the LOW period (t_{LOW}) of the SCL signal. If the clock stretches the SCL, the data must be valid by the setup time before it releases the clock.
(4) The maximum t_f for the SDA and SCL bus lines is stated in these tables as 300 ns and is longer than the specified maximum t_{of} for the output stages (250 ns). The maximum t_f allows series protection resistors (R_S) to be connected between the SDA and SCL pins and the SDA and SCL bus lines without exceeding the maximum specified t_f.
(5) In Fast-mode Plus, fall time is specified the same for both output stage and bus timing. If series resistors (R_S) are used, the design must allow for inclusion when considering bus timing.
(6) $t_{VD;DAT}$ = time for data signal from SCL LOW to SDA output (HIGH or LOW, depending on which one is worse).

Copyright © 2026 Texas Instruments Incorporated

(7) A Fast-mode I2C-bus device can be used in a Standard-mode I2C-bus system, but the requirement $t_{SU;DAT}$ 250 ns must then be met. This requirement is automatically met if the device does not stretch the LOW period of the SCL signal. If such a device does stretch the LOW period of the SCL signal, it must output the next data bit to the SDA line $t_{r(max)}$ + $t_{SU;DAT}$ = 1000 + 250 = 1250 ns (according to the Standard-mode I2C-bus specification) before the SCL line is released. Also the acknowledge timing must meet this set-up time.

6.17 Typical Characteristics

At V_{IN} = 12V, f_{sw} = 400kHz, unless otherwise stated.

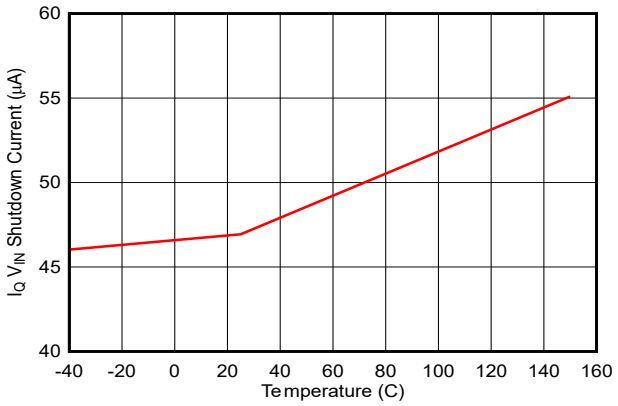

EN = 0V

Figure 6-1. I_Q V_{IN} Shutdown Current vs Temperature

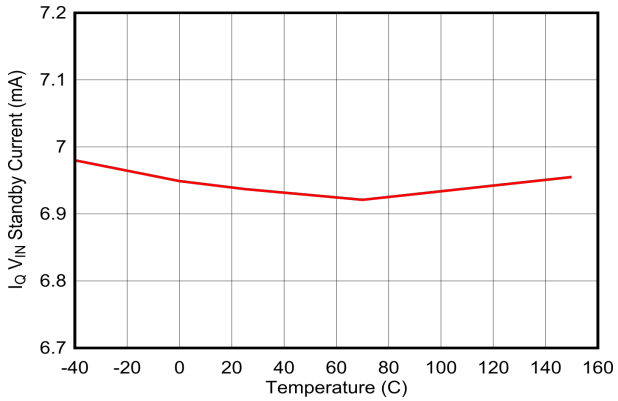

EN = 2V

USB Port(s) not connected

Figure 6-2. I_Q V_{IN} Standby Current vs Temperature

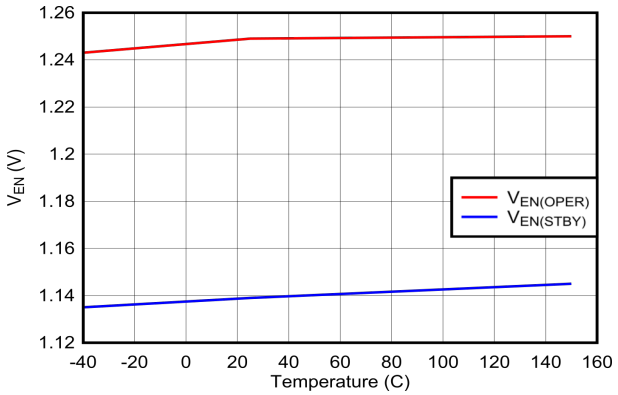

Figure 6-3. ENABLE/UVLO Thresholds vs Temperature

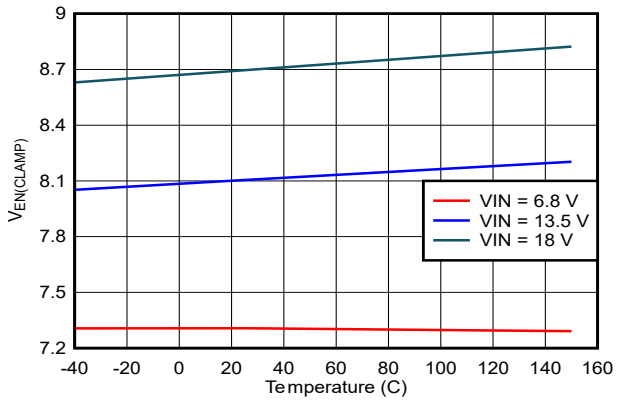

Figure 6-4. EN Clamp Voltage vs Temperature

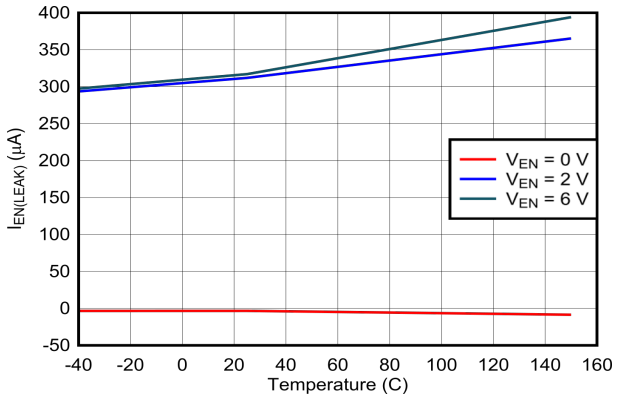

Figure 6-5. EN Leakage Current vs Temperature

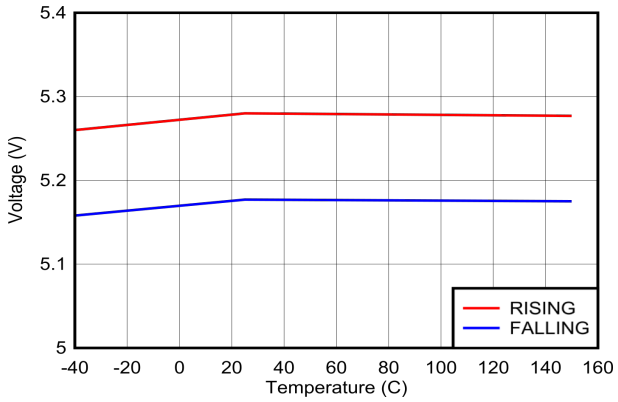

Figure 6-6. $V_{IN(UVLO)}$ vs Temperature

Copyright © 2026 Texas Instruments Incorporated

6.17 Typical Characteristics (continued)

At V_{IN} = 12V, f_{sw} = 400kHz, unless otherwise stated.

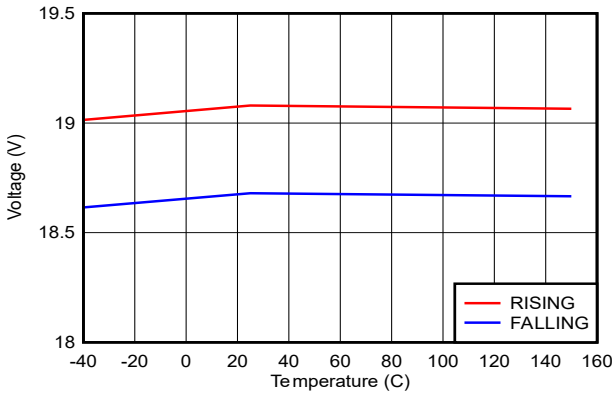

Figure 6-7. $V_{IN(OVP)}$ vs Temperature

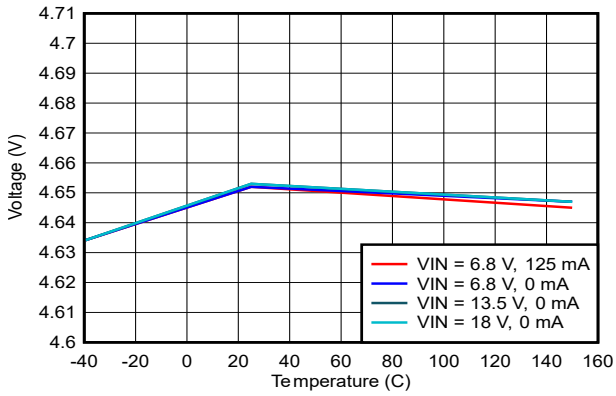

Figure 6-8. LDO_5V vs V_{IN} and Temperature

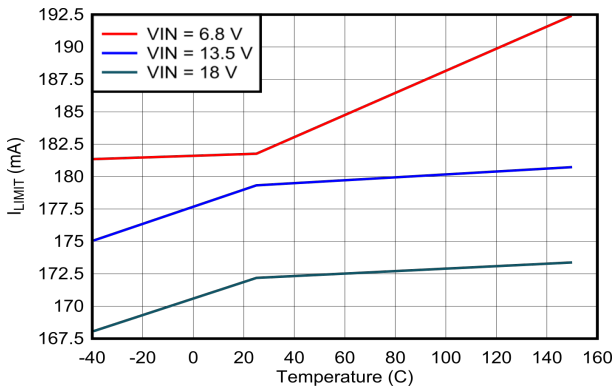

Figure 6-9. LDO_5V Current Limit vs V_{IN} and Temperature

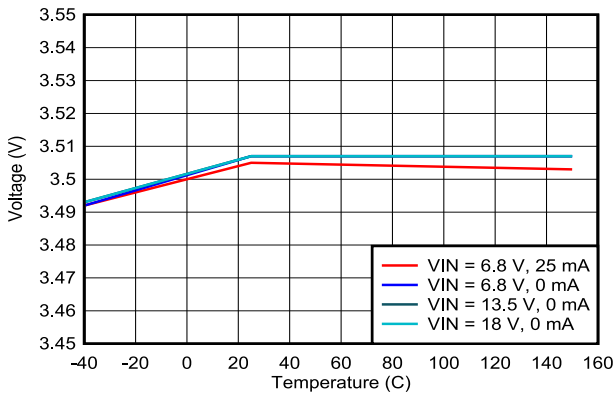

Figure 6-10. LDO_3V3 vs V_{IN} and Temperature

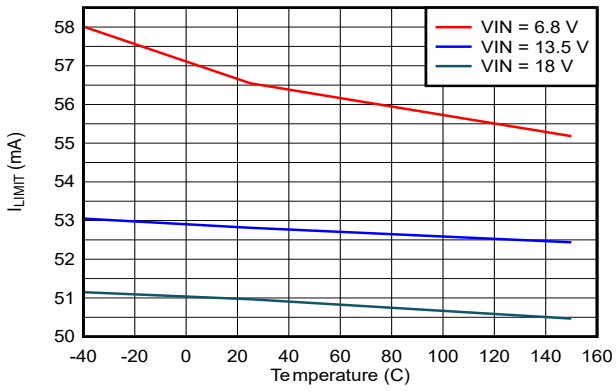

Figure 6-11. LDO_3V3 Current Limit vs V_{IN} and Temperature

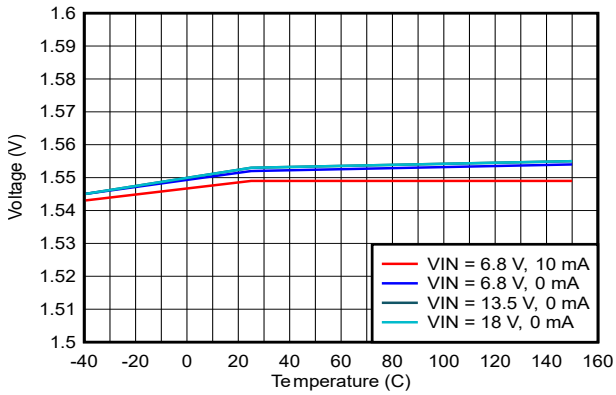

Figure 6-12. LDO_1V5 vs V_{IN} and Temperature

6.17 Typical Characteristics (continued)

At V_{IN} = 12V, f_{sw} = 400kHz, unless otherwise stated.

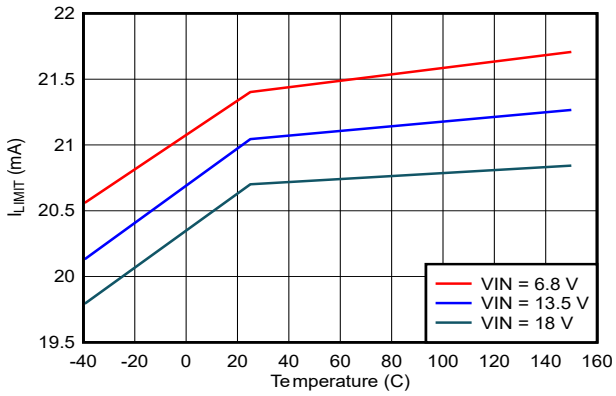

Figure 6-13. LDO_1V5 Current Limit vs V_{IN} and Temperature

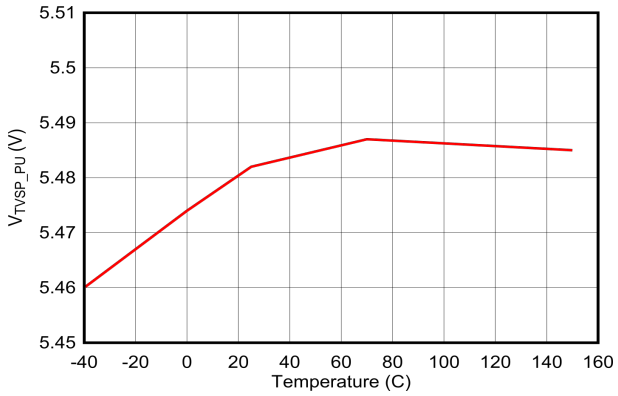

Figure 6-14. V_{TVSP_PU} vs Temperature

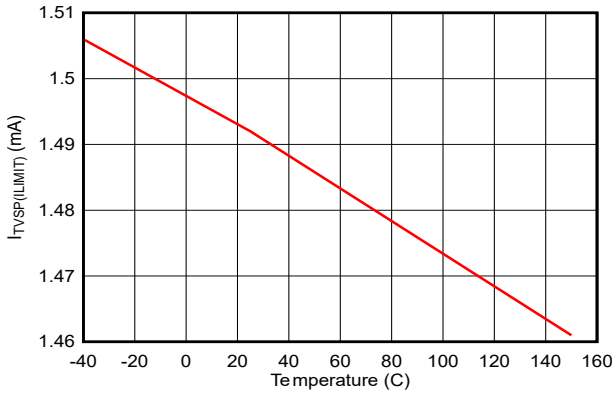

Figure 6-15. $I_{TVSP(ILIMIT)}$ vs Temperature

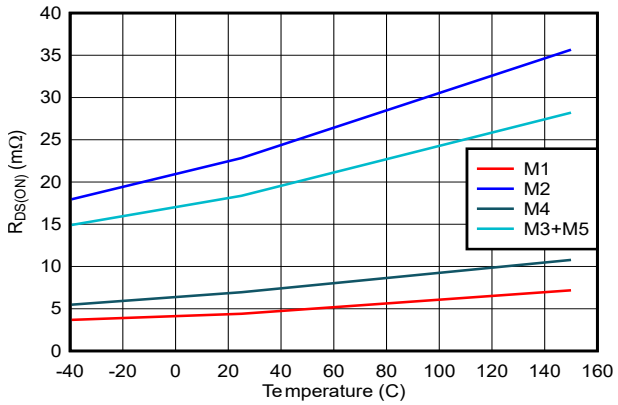

Figure 6-16. Buck-Boost Power FET $RDS_{(ON)}$ vs Temperature

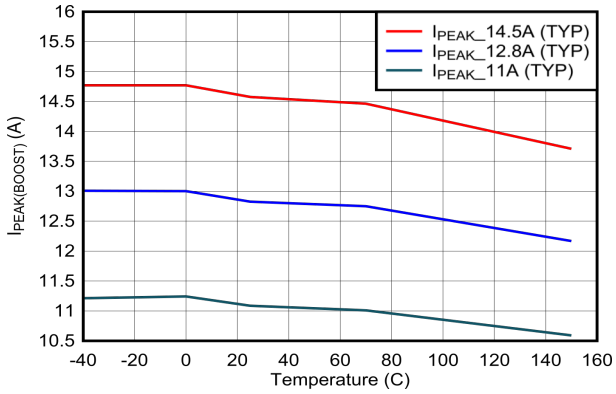

Figure 6-17. Boost Peak Current Limit vs Temperature (Upper Settings)

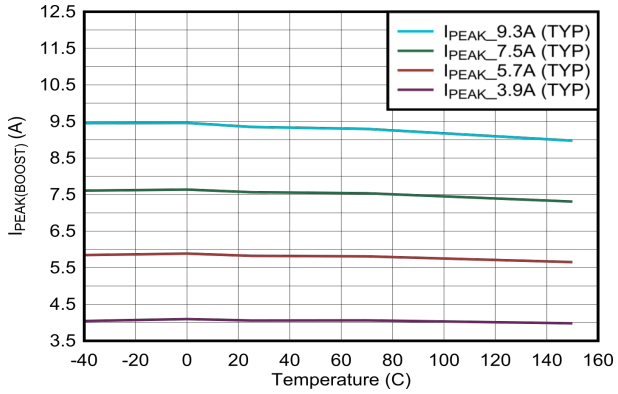

Figure 6-18. Boost Peak Current Limit vs Temperature (Lower Settings)

Copyright © 2026 Texas Instruments Incorporated

6.17 Typical Characteristics (continued)

At V_{IN} = 12V, f_{sw} = 400kHz, unless otherwise stated.

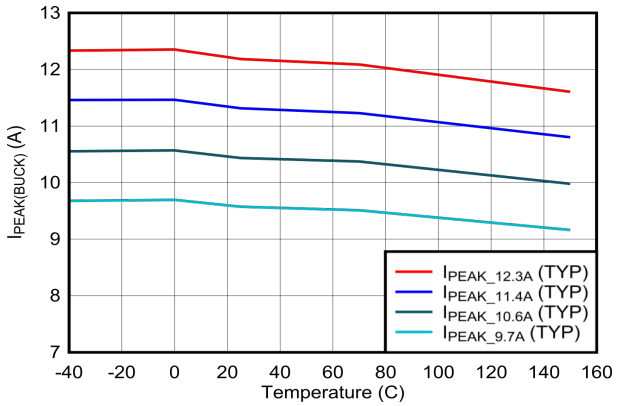

Figure 6-19. Buck Peak Current Limit vs Temperature (Upper Settings)

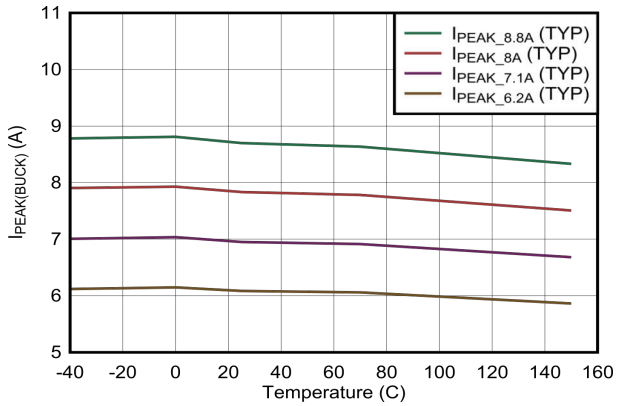

Figure 6-20. Buck Peak Current Limit vs Temperature (Lower Settings)

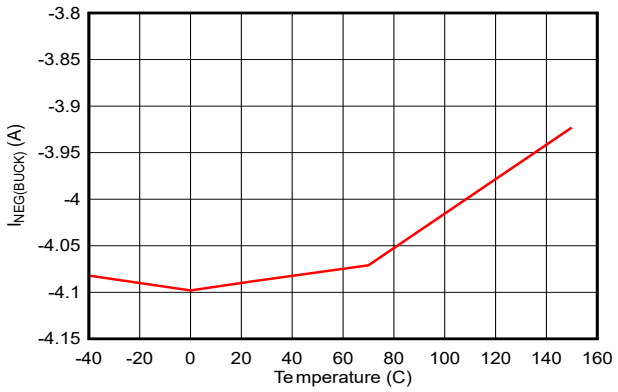

Figure 6-21. Buck Negative Current Limit vs Temperature

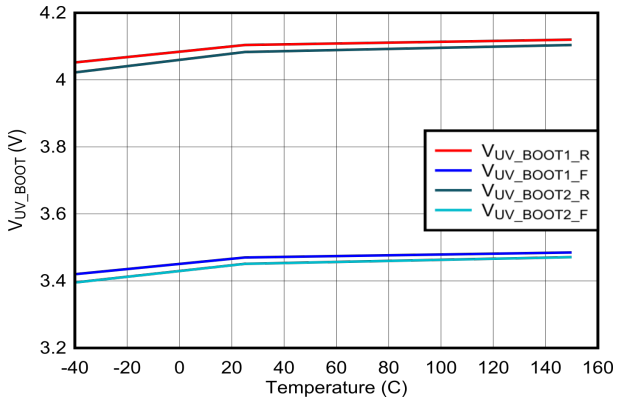

Figure 6-22. BOOTx UVLO vs Temperature

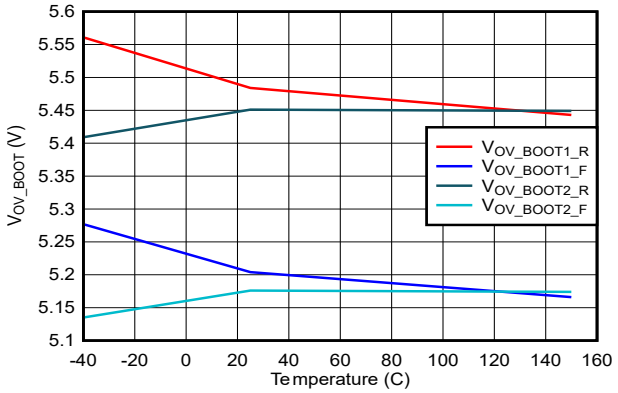

Figure 6-23. BOOTx OVP vs Temperature

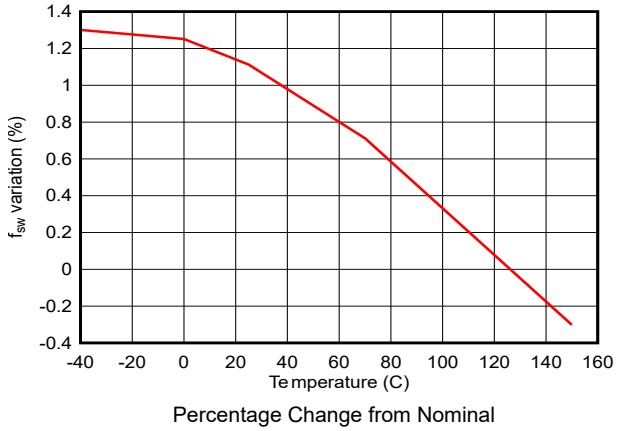

Figure 6-24. Buck-Boost Switching Frequency Variation vs Temperature

6.17 Typical Characteristics (continued)

At V_{IN} = 12V, f_{sw} = 400kHz, unless otherwise stated.

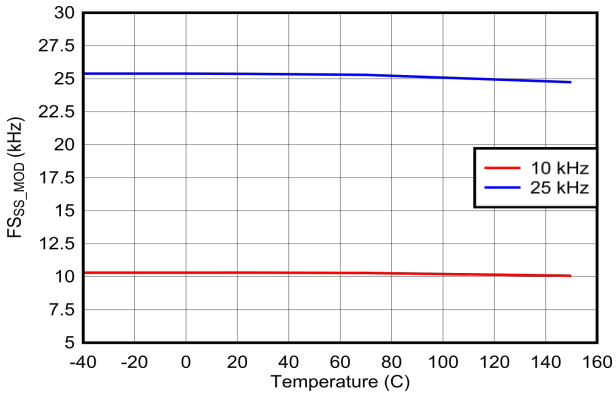

Figure 6-25. f_{SW} Dither Modulation Frequency vs Temperature

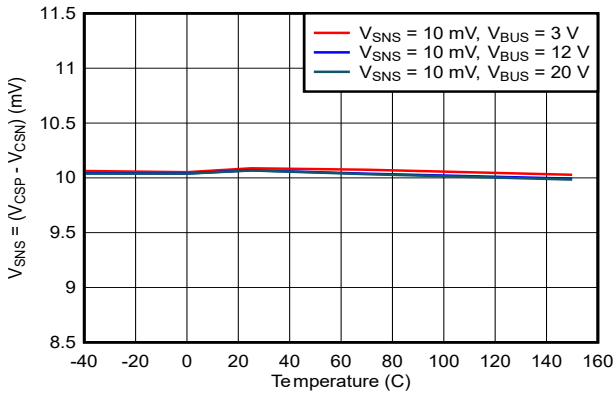

Target V_{SNS} for Current Limit = 10mV
Current Limiting Engaged

Figure 6-26. Current Loop Regulation Voltage vs V_{BUS} and Temperature

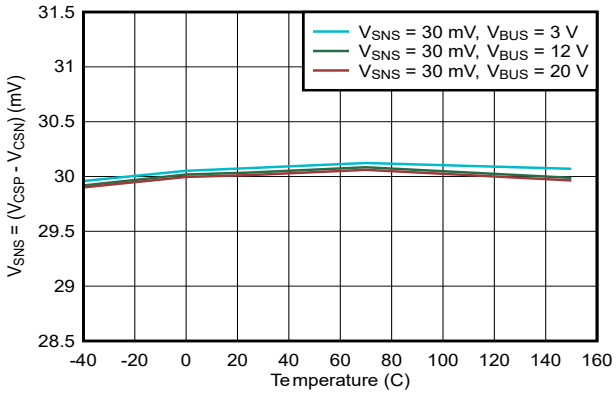

Target V_{SNS} for Current Limit = 30mV
Current Limiting Engaged

Figure 6-27. Current Loop Regulation Voltage vs V_{BUS} and Temperature

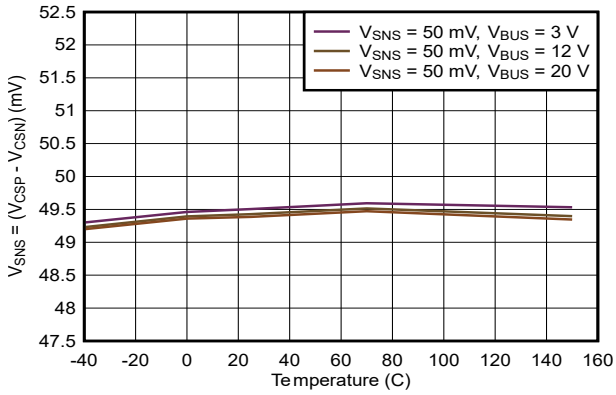

Target V_{SNS} for Current Limit = 50mV
Current Limiting Engaged

Figure 6-28. Current Loop Regulation Voltage vs V_{BUS} and Temperature

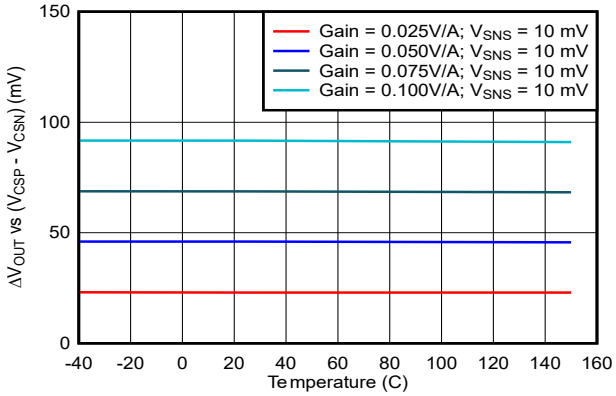

Figure 6-29. Cable Voltage Droop Compensation vs Temperature

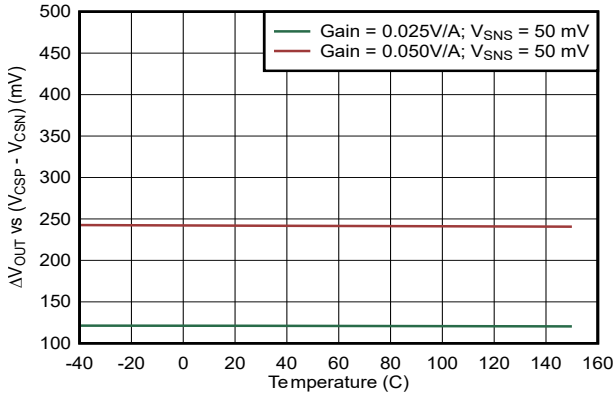

Figure 6-30. Cable Voltage Droop Compensation vs Temperature

Copyright © 2026 Texas Instruments Incorporated

6.17 Typical Characteristics (continued)

At V_{IN} = 12V, f_{sw} = 400kHz, unless otherwise stated.

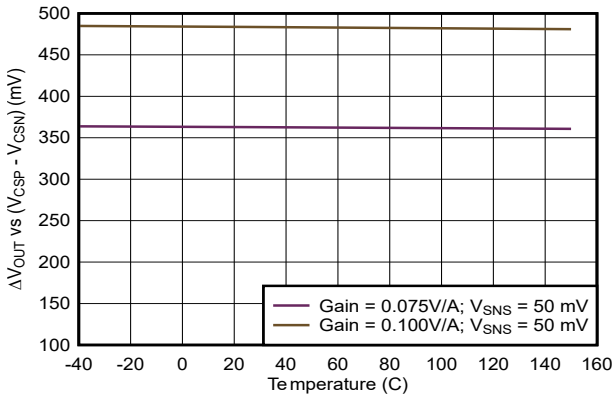

Figure 6-31. Cable Voltage Droop Compensation vs Temperature

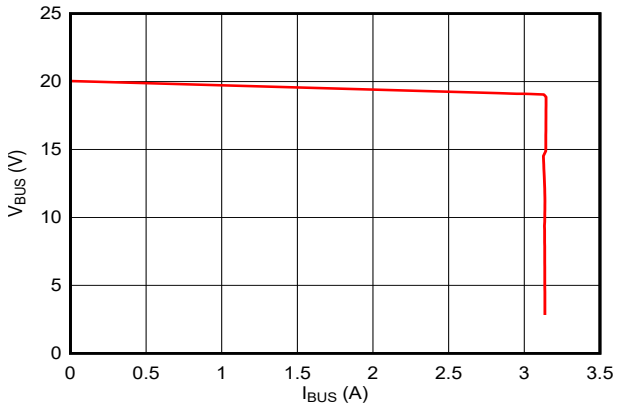

V_{IN} = 13.5V V_{BUS} = 20V (CV) I_{LIMIT} = 3.15A (CC)

Figure 6-32. Constant Voltage to Constant Current Transition

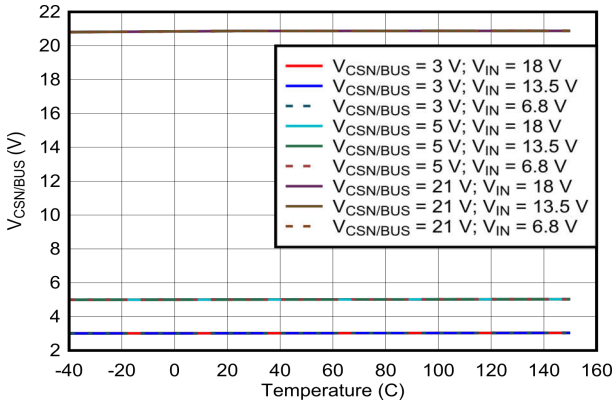

I_{BUS} = 0A

Figure 6-33. Buck-boost Output Voltage Regulation vs Temperature

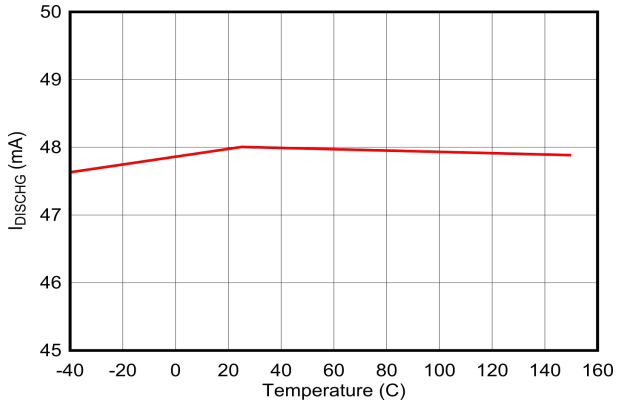

Figure 6-34. V_{BUS} Discharge Current vs Temperature

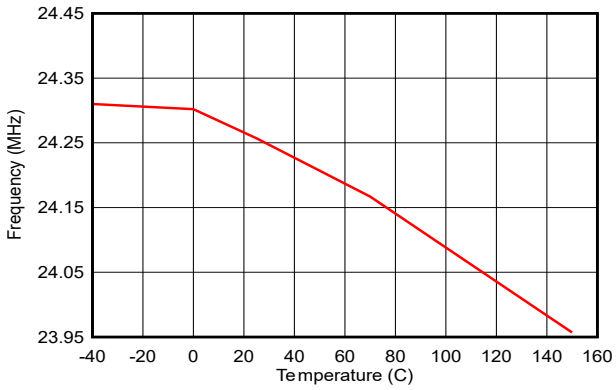

Figure 6-35. (M0) 24MHz Oscillator vs Temperature

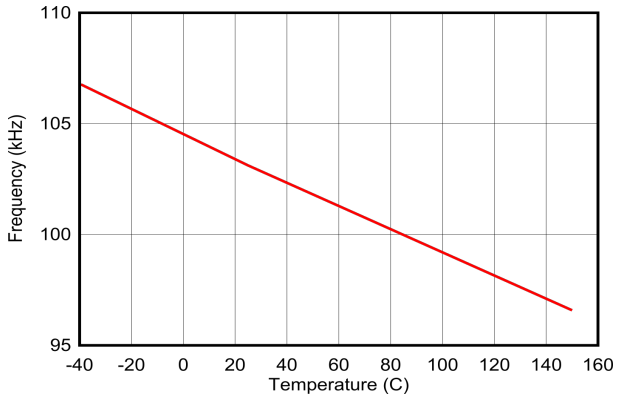

Figure 6-36. (M0) 100kHz Oscillator vs Temperature

6.17 Typical Characteristics (continued)

At V_{IN} = 12V, f_{sw} = 400kHz, unless otherwise stated.

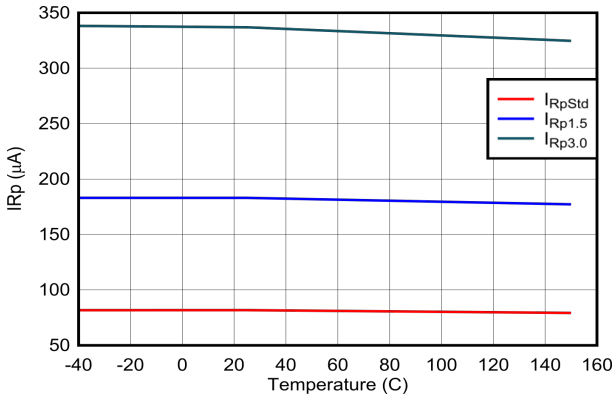

Figure 6-37. Type-C Cable Detect: I_{Rp} vs Temperature

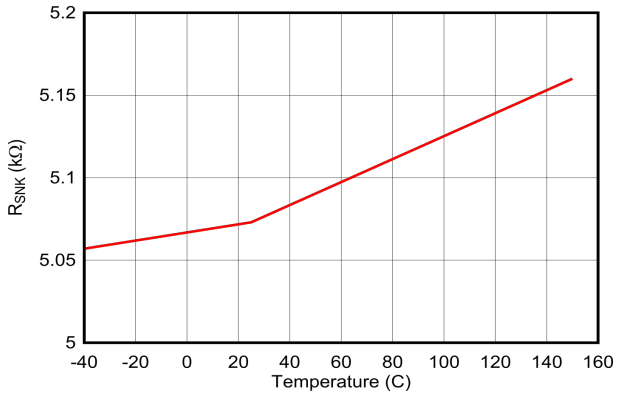

Figure 6-38. Type-C Cable Detect: R_{SNK} vs Temperature

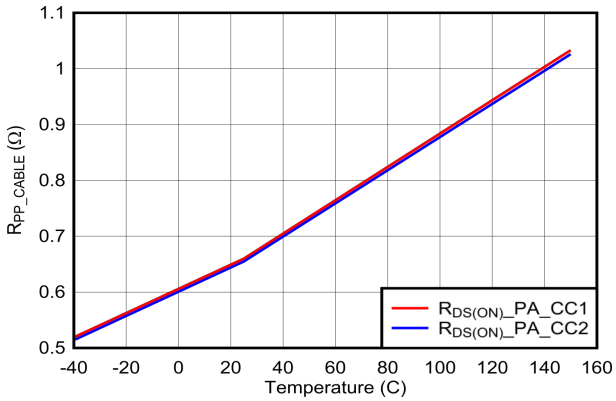

Figure 6-39. V_{CONN} Power Path: $R_{DS(ON)}$ vs Temperature

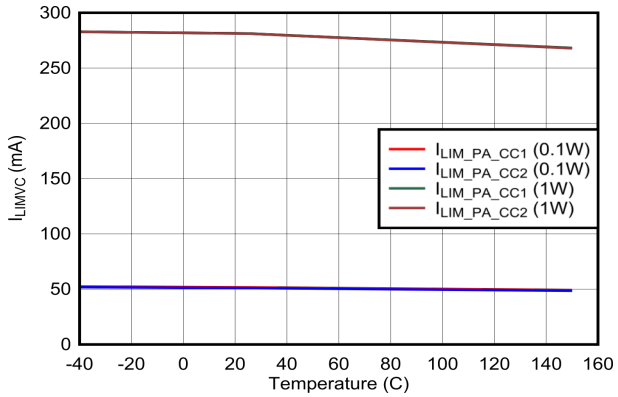

Figure 6-40. V_{CONN} Power Path: Current Limit vs Temperature

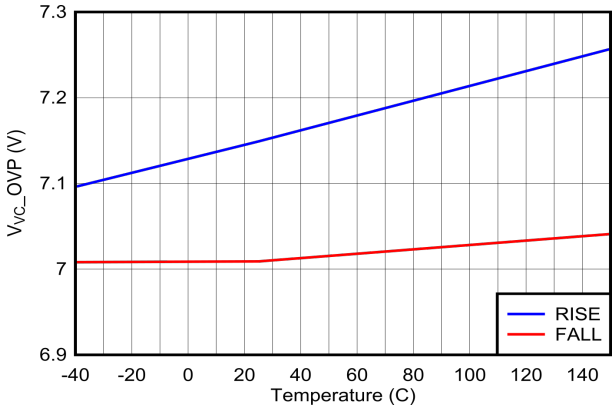

Figure 6-41. Type-C Cable Detect and V_{CONN}: Overvoltage Protection Thresholds vs Temperature

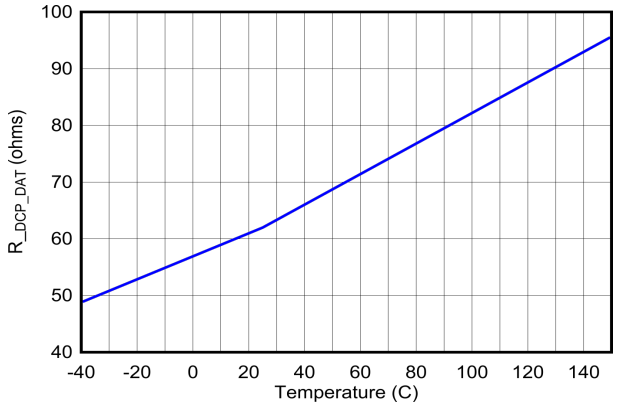

Figure 6-42. USB BC1.2: DP to DM Shorting Resistance, R_{DCP_DAT}

Copyright © 2026 Texas Instruments Incorporated

6.17 Typical Characteristics (continued)

At V_{IN} = 12V, f_{sw} = 400kHz, unless otherwise stated.

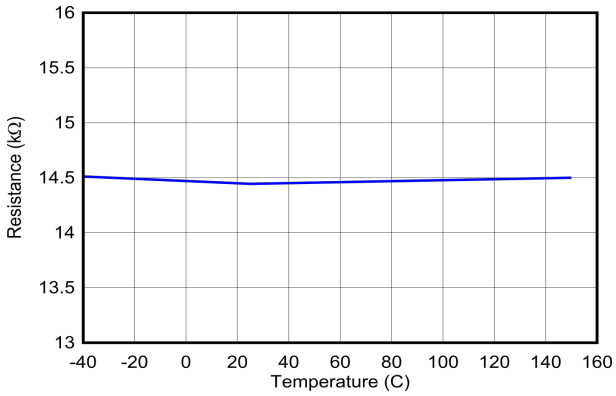

Figure 6-43. USB BC1.2: DM to AGND 15kΩ Resistance, $R_{DM_DWN_15k}$

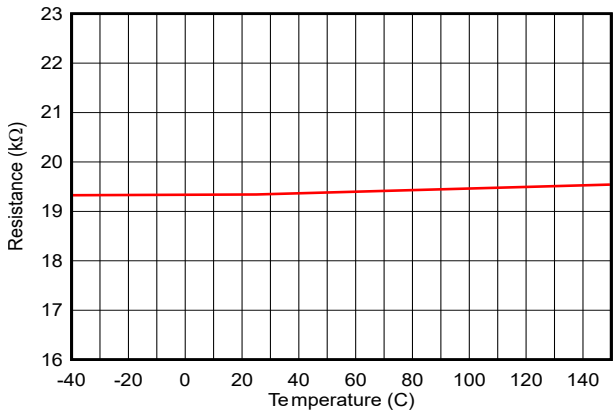

Figure 6-44. USB BC1.2: DM to AGND 20kΩ Resistance, $R_{DM_DWN_20k}$

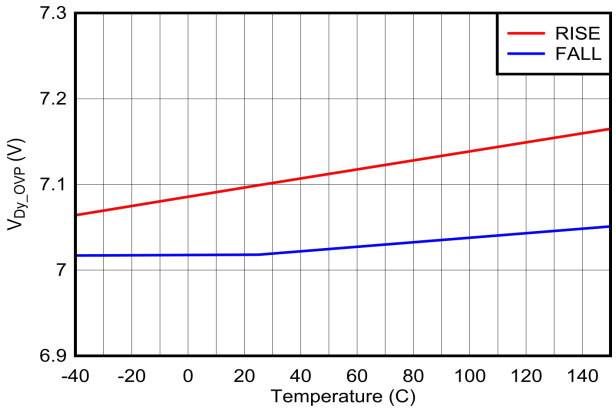

Figure 6-45. USB BC1.2: DP and DM Pin Overvoltage Protection Thresholds vs Temperature

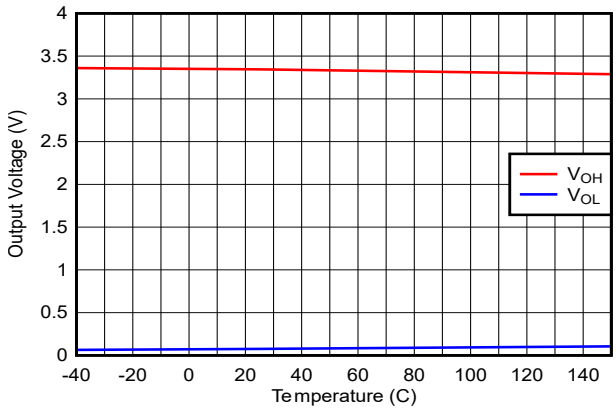

GPIO 0, 1, 4, 7, 8, 9

IO = ±2mA

Figure 6-46. GPIO: Output Voltage vs Output Current and Temperature

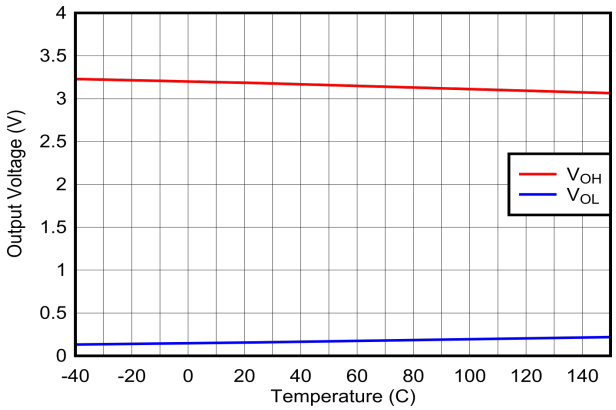

GPIO 2, 3, 5, 6

IO = ±5mA

Figure 6-47. GPIO: Output Voltage vs Output Current and Temperature

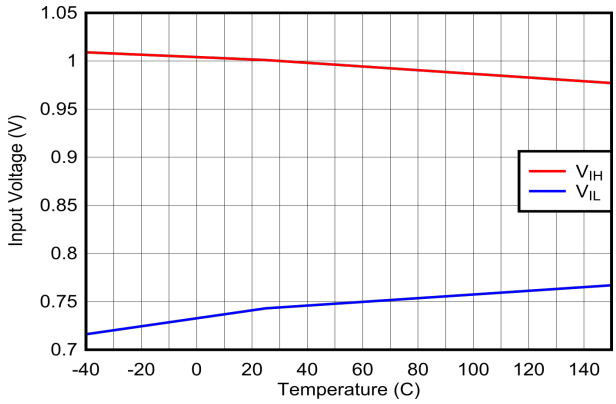

Figure 6-48. GPIO: Input Voltage Thresholds vs Temperature

7 Parameter Measurement Information

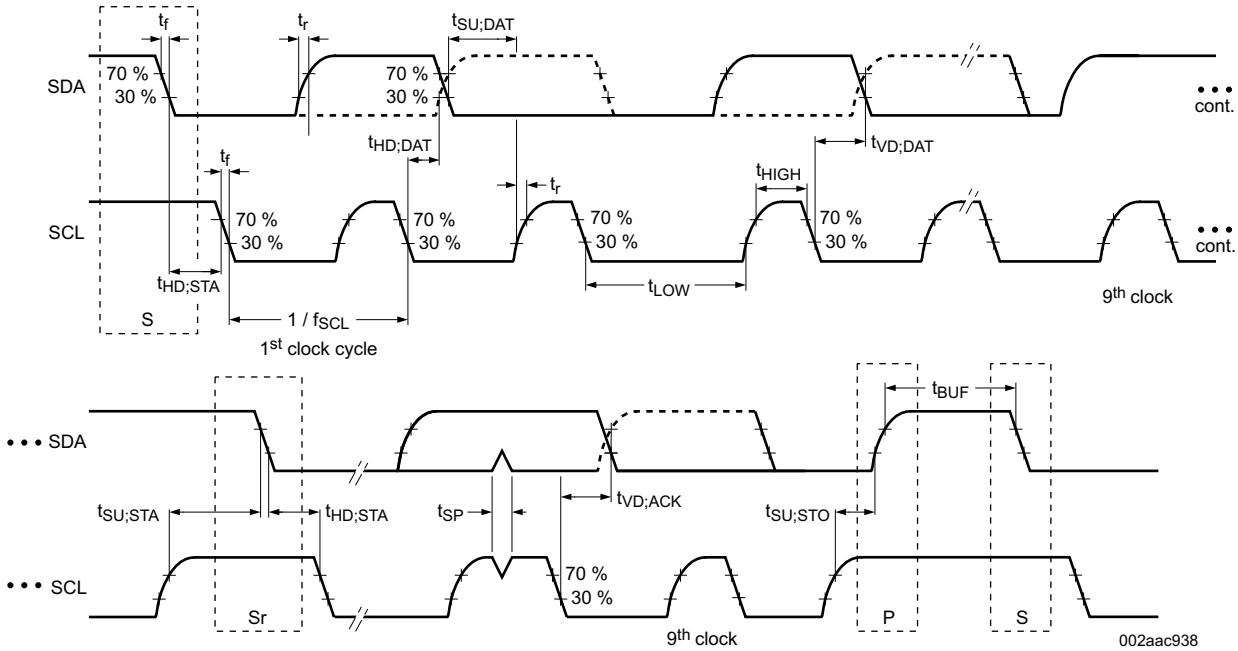

Figure 7-1. I²C Target Interface Timing

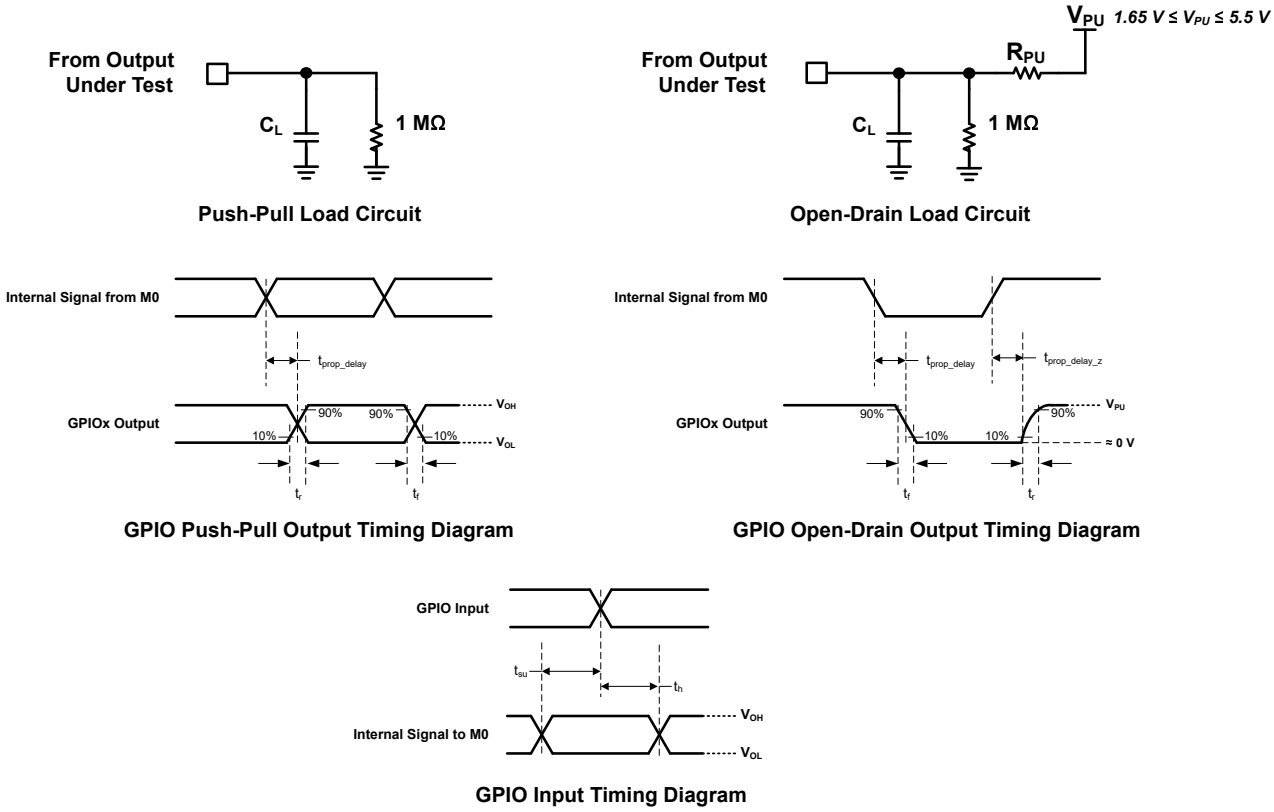

Figure 7-2. GPIO Output Timing Diagram (rise/fall vs capacitive load)

Copyright © 2026 Texas Instruments Incorporated

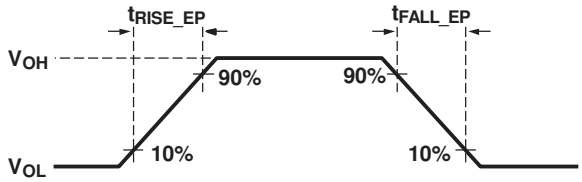

Figure 7-3. USB Endpoint Transmitter Rise and Fall Time

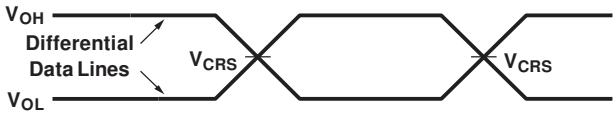

(a) Output Crossover Voltage

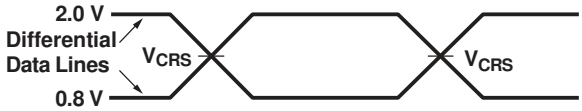

(b) Input Crossover Voltage

Figure 7-4. USB Endpoint Crossover Voltages

8 Detailed Description

8.1 Overview

The TPS25762-Q1 is a fully-integrated AEC-Q100 USB Power Delivery (USB-PD) source intended for use in 12V automotive battery systems. Input supply pin, V_{IN}, must be connected to a load dump clamped battery supply, V_{BAT}, and never exceed 40V (ABS MAX).

The device consists of seven sub-blocks: USB-PD controller; Type-C cable plug and orientation detection circuitry; USB Endpoint; USB Battery Charging Specification Version 1.2 (BC1.2) detection circuitry; digital core; device power management and supervisory circuitry; and a buck-boost converter with 4 integrated power switches.

The USB-PD controller provides the physical layer (PHY) functionality of the USB-PD protocol. The USB-PD data is output through either the Px_CC1 pin or the Px_CC2 pin, depending on the orientation of the reversible USB Type-C cable. For a high-level block diagram of the USB-PD physical layer, a description of its features and more detailed circuitry, see *USB-PD Physical Layer*.

The cable plug and orientation detection analog circuitry automatically detects a USB Type-C cable plug insertion and also automatically detects the cable orientation. For a high-level block diagram of cable plug and orientation detection, a description of its features and more detailed circuitry, see *Cable Plug and Orientation Detection*.

A USB Endpoint is included for downloading configuration information and firmware updates. When enabled by firmware, the USB Endpoint connects to the PA_DP and PA_DM pins.

The USB BC1.2 sub-block contains circuitry to support legacy USB charging methods which signal on the USB DP and DM data lines including: DCP, Divider-3, 1.2V mode, and HVDCP. For additional detail, see BC 1.2, legacy and fast charging modes (Px_DP, Px_DM).

The power management and supervisory circuitry generates the LDO_5V, LDO_3V3, and LDO_1V5 voltage rails used by the device. LDO_5V supplies the LDO_3V3 and LDO_1V5 rails. For a high-level block diagram of the power management circuitry, a description of its features and more detailed operation, see *Internal LDO Regulators* section.

The digital core contains an ARM Cortex-M0 with 160kB ROM and 27kB RAM memory. The ROM contains firmware code to execute device functionality. RAM stores application configuration code created using a graphical user interface (GUI) and post-manufacturing firmware updates. The digital core is the engine for autonomously managing the system including: USB port connection status and communication; system power budget and allocation; system thermal monitoring and load shedding; and fault detection and reporting. All devices contain one controller I^2C port (I^2C1) for controlling external peripherals such as external EEPROM memory; DC/DC converters; USB data multiplexers/redrivers; GPIO expanders; and additional temperature sensors. Some devices include an I^2C target port (I^2C2) for connection to an external processor, HUB or embedded controller. An integrated 8-bit analog-to-digital converter ADC (see the *ADC* section) monitors USB port telemetry information. USB port connection status, voltage, current and fault information is read from the I^2C2 target port. For a high-level block diagram of the digital core and a description of its features, see the *Digital Core* section.

The integrated buck-boost DC/DC converter supplies the PA_VBUS power source. The integrated DC/DC operates in buck mode when V_{IN} is greater than V_{OUT} and boost mode when V_{IN} is less than V_{OUT}. When V_{IN} and V_{OUT} are nearly the same, it operates in transition mode.

Single Port Device

TPS25762-Q1 is a single USB-PD port device. Refer to *Device Comparison Table* for dual port options. The TPS25762-Q1 device consists of a single 3.3V to 21V output internal buck-boost converter, one USB-PD port controller providing cable plug and orientation detection, one internal VCONN source path, legacy USB Battery Charging Specification v1.2 Dedicated Charging Port (DCP) as well as legacy (non-USB compliant) charger detection including: Divider-3, 1.2V, and HVDCP modes. The TPS25762-Q1 device communicates with

Copyright © 2026 Texas Instruments Incorporated

its connected USB Type-C cable and downstream USB device at the opposite end of the cable to determine connection state and enables VBUS sourcing as appropriate.

8.2 Functional Block Diagram

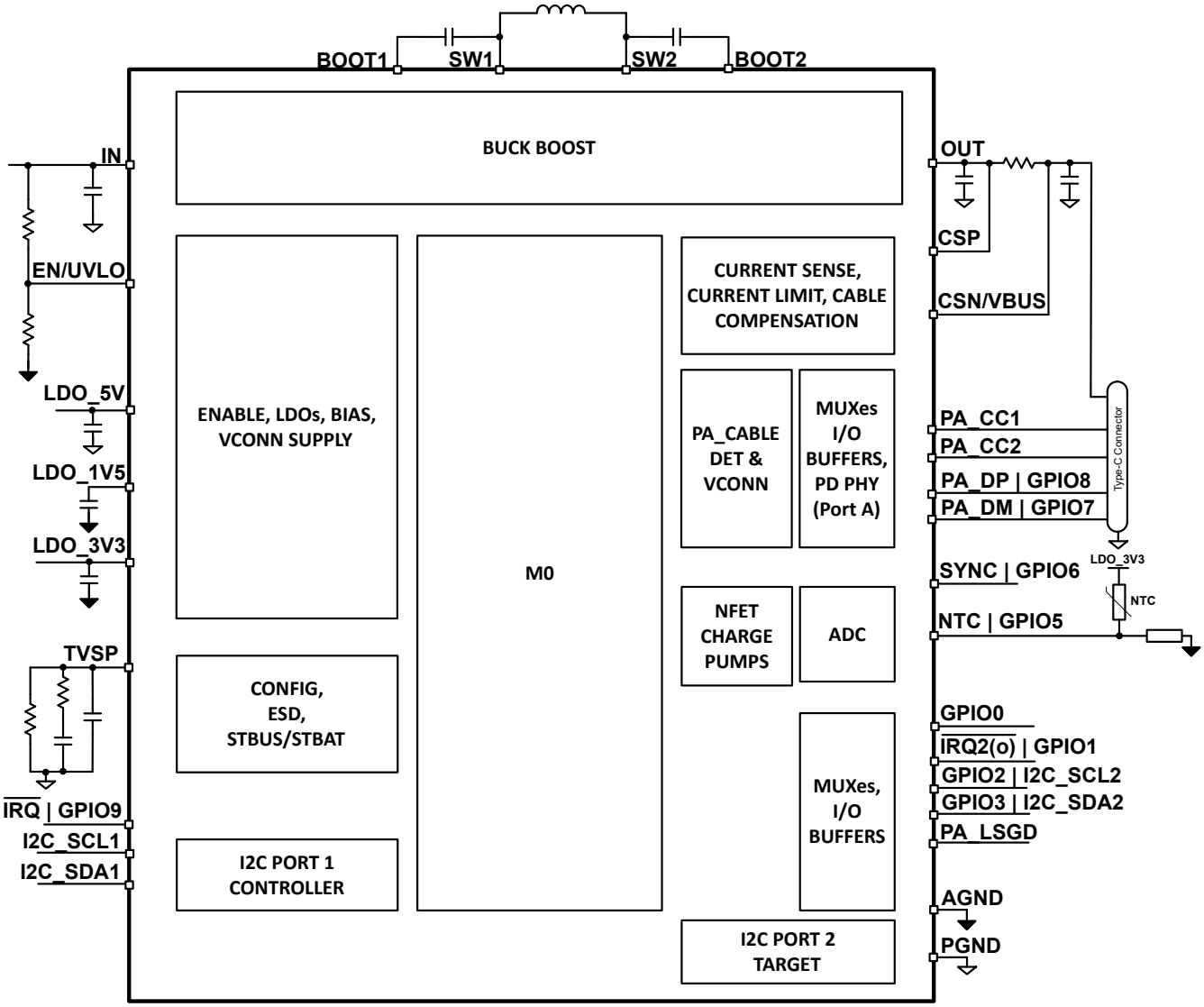

8.3 Feature Description

8.3.1 Device Power Management and Supervisory Circuitry

8.3.1.1 VIN UVLO and Enable/UVLO

The TPS25762-Q1 has one internally fixed V_{IN} UVLO and one user programmable UVLO using the EN/UVLO pin. Both thresholds must be cleared for the device to start up.

- The fixed $V_{IN(UVLO)}$ has a rising threshold between 5V and 5.5V to enable internal circuits with sufficient headroom for proper operation.
- The EN/UVLO pin provides the user with a resistor programmable UVLO threshold and enable / disable for the device.

The EN/UVLO pin has three distinct voltage ranges: shutdown, standby, and operating. When the EN/UVLO pin is below the standby threshold $V_{EN(STBY)}$, the device is disabled in a low power shutdown. When EN/UVLO voltage is greater than the standby threshold $V_{EN(STBY)}$ but less than the operating threshold $V_{EN(OPER)}$, the internal bias rails, LDO_5V, LDO_3V3, and LDO_1V5 regulators are enabled but remaining device functions

are disabled. When EN/UVLO is greater than the operating threshold $V_{EN(OPER)}$ and LDO_5V, LDO_3V3 and LDO_1V5 regulators are above their respective undervoltage threshold UVLO thresholds, the device is fully functional. The EN/UVLO pin includes fixed hysteresis between the shutdown mode and the standby mode.

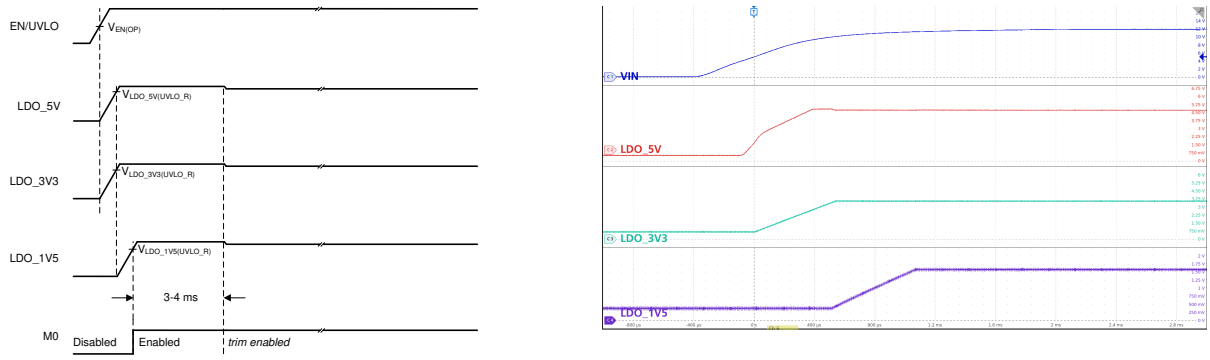

Figure 8-1. EN/UVLO and LDO Sequencing

Table 8-1. EN/UVLO and LDO_UVLO Operation

EN/UVLO (1)	LDOs	DEVICE OPERATION
$V_{EN/UVLO} < V_{EN(LDO_V5V_F)}$	—	Shutdown: LDO_5V, LDO_3V3 and LDO_1V5 OFF. M0 (MCU) is OFF.
$V_{EN(LDO_V5V_R)} < V_{EN/UVLO} < V_{EN(STBY)}$	—	Standby: LDO_5V, LDO_3V3 and LDO_1V5 ON. M0 (MCU) is OFF.
$V_{EN/UVLO} > V_{EN(OPER)}$	LDO_5V < $V_{LDO_5V(UVLO_R)}$, or LDO_3V3 < $V_{LDO_3V3(UVLO_R)}$; or LDO_1V5 < $V_{LDO_1V5(UVLO_R)}$	LDO_5V, LDO_3V3 and LDO_1V5 ON, M0 (MCU) is OFF.
$V_{EN/UVLO} > V_{EN(OPER)}$	LDO_5V > $V_{LDO_5V(UVLO_R)}$, and LDO_3V3 > $V_{LDO_3V3(UVLO_R)}$, and LDO_1V5 > $V_{LDO_1V5(UVLO_R)}$	Operating: M0 (MCU) is ON.

(1) Valid when $V_{IN} > V_{IN(UVLO_R)}$.

In some cases an input UVLO level different than that provided by the internal $V_{IN(UVLO)}$ is needed and is accomplished by using the circuit shown in *UVLO Threshold Programming*. The input voltage at which the device turns on is designated V_{ON}; while the turnoff voltage is V_{OFF}. First a value for R_{ENB} is chosen in the range of 13kΩ to 22kΩ. Use Equation 1 and Equation 2 to calculate R_{ENT} and V_{OFF}.

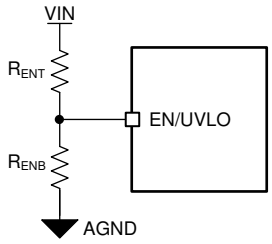

Figure 8-2. UVLO Threshold Programming

$$R_{ENT} = \left(\frac{V_{ON}}{V_{EN(OPER)}} - 1\right) \times R_{ENB} \quad (1)$$

The hysteresis between the UVLO turn-on threshold and turn-off threshold is set by the upper resistor in the EN/UVLO resistor divider and is given by:

Copyright © 2026 Texas Instruments Incorporated

$$V_{OFF} = \left(1 - \frac{V_{EN(HYS)}}{V_{EN(OPER)}}\right) \times V_{ON} \quad (2)$$

Where

- V_{ON} = V_{IN} turn-on voltage
- V_{OFF} = V_{IN} turn-off voltage

Note: R_{ENT} ≥ 47kΩ

If the programmable UVLO is not required, connect the EN/UVLO pin to the IN pin with a 47kΩ, or larger, resistor.

8.3.1.2 Internal LDO Regulators

Three internal LDOs provide regulated supplies for operation of internal circuitry.

- LDO_5V: Supplies buck-boost gate drive circuitry, LDO_3V3, LDO_1V5, and PA and PB VCONN power paths. External bypass capacitance, C_{LDO_5V} is required for proper operation. It is highly recommended to include an additional high frequency 0.1µF capacitor in parallel with C_{LDO_5V}. In the design, place C_{LDO_5V} and the parallel high frequency capacitor as close to the LDO_5V pin as possible. This capacitance: 1) provides energy storage for the buck-boost internal FET gate drivers, and 2) is required to stabilize the internal 5V LDO in applications where an external 5V supply is not connected. The TPS25762-Q1 does not operate (release reset) until $V_{LDO_5V(UVLO_R)}$ threshold is met. Hard reset occurs when V_{LDO_5V} < $V_{LDO_5V(UVLO_F)}$ threshold. Current from LDO_5V returns to PGND pin. The LDO_5V output is capable of supplying small external loads such as indicator LEDs. When supplying external components, it is recommended that the total external load current not exceed 25mA (MAX).
  - 0.1W VCONN: when enabled in the application configuration GUI, LDO_5V is capable of sourcing 20mA each to PA_VCONN and PB_VCONN.
  - 1W VCONN: when enabled in the application configuration GUI, this mode of operation *requires* an external 4.75 - 5.5V, 500mA capable supply connected to LDO_5V. Back-feeding of LDO_5V is allowed.
- LDO_3V3: Supplies internal analog circuits, GPIO buffers, USB PD and the USB Endpoint PHYs. External bypass capacitance of C_{LDO_3V3} is required for proper operation. An additional 0.1µF capacitor in parallel with C_{LDO_3V3} is highly recommended to filter high frequency noise from the I/O buffers and PHYs. The LDO_3V3 output is capable of supplying external circuits up to 25mA. Expected loads include: EEPROM (5mA), NTC resistor divider network (< 1mA). Current is limited to $I_{LDO_3V3(ILIMIT)}$. Note: the USB PD and Endpoint PHYs draw current from LDO_3V3. If a CCx or Dx pin is shorted to GND during a transmission, the current drawn reaches the current limit threshold. Similarly, if any GPIO pins are configured as push-pull outputs and a GPIO short to GND event occurs, the LDO_3V3 current limit is reached. Current returns to AGND pin.
- LDO_1V5: Supplies digital core. External bypass capacitance of C_{LDO_1V5} is required for proper operation. An additional 0.1µF capacitor in parallel with C_{LDO_1V5} is highly recommended to filter noise generated by the digital core. The M0 is held in reset until all three UVLO_R (rising) thresholds are met. Current returns to AGND pin.

Copyright © 2026 Texas Instruments Incorporated

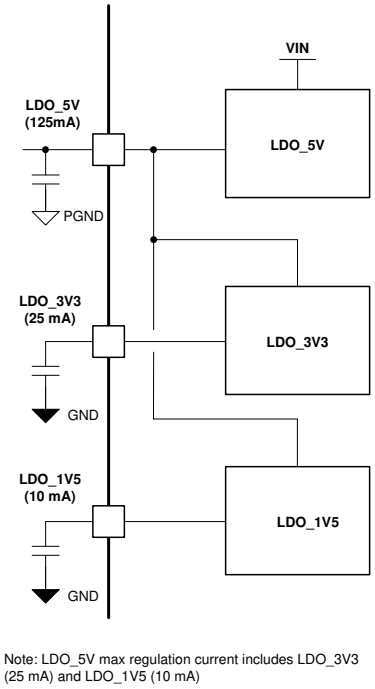

Figure 8-3. Internal LDO Connection Diagram

8.3.2 TVSP Device Configuration and ESD Protection

The **T**ransient **V**oltage protection and firmware **S**etting **P**in (**TVSP**) has three functions: 1) Boot configuration settings; 2) USB connector pin short to V_{BUS} or V_{BAT} protection; and 3) USB connector pin enhanced ESD protection.

- **R_{TVSP}:** At power on, the resistance between the TVSP pin and PGND determines the boot method, USB PD port I^2C addresses and I^2C logic thresholds. Resistor values are device-specific; refer to Table 8-5. The most common configuration is shown in Basic TVSP Pin Connection with R_{TVSP} open, corresponding to TVSP Index 0. During device initialization and boot, typically within 4 seconds after power on, V_{IN} must be above 7.6V enabling proper bias of the TVSP pin to 5.5V. Once boot is complete the device operates over the full V_{IN} range.
- **C_{TVSP}:** A 0.1µF capacitor (C_{TVSP}) *must* be connected to PGND. Place C_{TVSP} as close to the TVSP pin as possible to minimize parasitic inductance. C_{TVSP} is part of the centralized protection circuitry fortifying connector pins Px_CCy, Px_DP and Px_DM from damage during short to V_{BUS}, V_{BAT} and ESD events. A 40V 0.1µF capacitor is recommended for proper operation of the internal TVSP regulator circuit.
- **TVSP Damper Network:** Capacitance, C_{DAMP}, and resistance, R_{DAMP}, form an RC network preventing excessive current from flowing inside the device during connector pin overvoltage and ESD events.
  - **C_{DAMP}:** A 0.47µF capacitor *must* be connected in series with R_{DAMP} to PGND. A 40V 0.47µF capacitor is recommended.
  - **R_{DAMP}:** A 10Ω resistor *must* be connected in series with C_{DAMP} to PGND. A 0.25W rating is recommended.

Copyright © 2026 Texas Instruments Incorporated

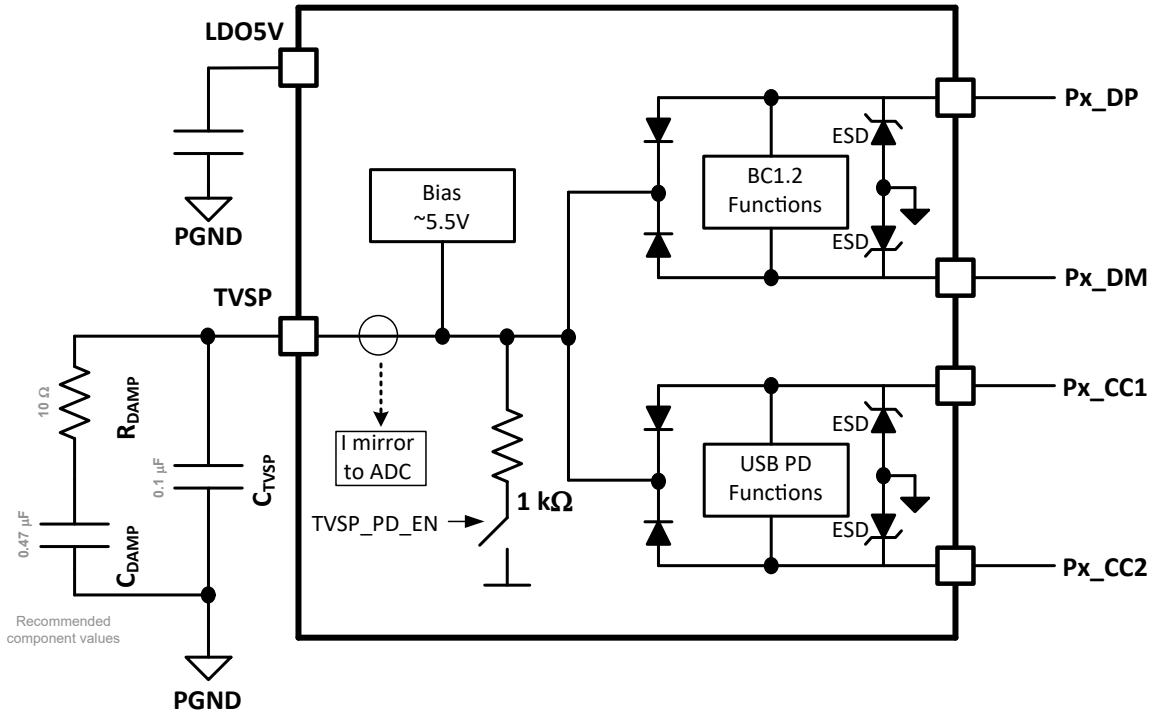

Figure 8-4. Basic TVSP Pin Connection

Table 8-2. Recommended TVSP Components

C_{TVSP}	R_{DAMP}	C_{DAMP}
0.1µF	10Ω	0.47µF

Table 8-3. R_{TVSP} Configuration Settings (TPS257xxCQRQLRQ1)

$R_{TVSP\ (kΩ)}$ (1)	TVSP Index	ADC Value	I2C Target Port Addresses (A | B)(2)	I2C Logic (V_{DD})	Boot Mode
Open	0	≤ 10 (0x0A)	0x22 | 0x26	3.3V	EEPROM
93.1	1	≤ 24 (0x18)	0x23 | 0x27	3.3V	External HUB/MCU
47.5	2	≤ 42 (0x2A)	0x22 | 0x26	1.8V	EEPROM
29.4	3	≤ 63 (0x3F)	0x23 | 0x27	1.8V	External HUB/MCU
20.0	4	≤ 89 (0x59)	0x23 | 0x27	3.3V	EEPROM
14.7	5	≤ 119 (0x77)	0x22 | 0x26	3.3V	External HUB/MCU
11.0	6	≤ 156 (0x9C)	0x23 | 0x27	1.8V	EEPROM
8.45	7	≤ 201 (0xC9)	0x22 | 0x26	1.8V	External HUB/MCU
6.65	8	≤ 255 (0xFF)	0x22 | 0x26	3.3V	Firmware Update

Table 8-4. R_{TVSP} Configuration Settings (TPS257xxCAQRQLRQ1)

$R_{TVSP\ (kΩ)}$	TVSP Index	ADC Value	I2C Target Port Addresses (A | B)	I2C Logic (V_{DD})	Boot Mode
Open	0	≤ 10 (0x0A)	0x22 | 0x26	3.3V	EEPROM
5.6	8	≤ 255 (0xFF)	0x22 | 0x26	3.3V	Firmware Update

Table 8-5. R_{TVSP} Configuration Settings (TPS257xxD/FQRQLRQ1)

$R_{TVSP\ (kΩ)}$ (1)	TVSP Index	ADC Value	I2C Target Port Addresses (A | B)(2)	I2C Logic (V_{DD})	Boot Mode
Open	0	≤ 10 (0x0A)	0x22 | 0x26	3.3V	EEPROM
93.1	1	≤ 24 (0x18)	0x23 | 0x27	3.3V	External HUB/MCU
47.5	2	≤ 42 (0x2A)	0x22 | 0x26	1.8V	EEPROM

Table 8-5. R_{TVSP} Configuration Settings (TPS257xxD/FQRQLRQ1) (continued)

R_{TVSP} (kΩ) (1)	TVSP Index	ADC Value	I2C Target Port Addresses (A | B)(2)	I2C Logic (V_{DD})	Boot Mode
26.7	3	≤ 63 (0x3F)	0x23 | 0x27	1.8V	External HUB/MCU
18.2	4	≤ 89 (0x59)	0x23 | 0x27	3.3V	EEPROM
13.0	5	≤ 119 (0x77)	0x22 | 0x26	3.3V	External HUB/MCU
9.53	6	≤ 156 (0x9C)	0x23 | 0x27	1.8V	EEPROM
7.5	7	≤ 201 (0xC9)	0x22 | 0x26	1.8V	External HUB/MCU
5.6	8	≤ 255 (0xFF)	0x22 | 0x26	3.3V	Firmware Update

(1) 1% resistor required.
(2) 0x22h = 0100010; 0x26h = 0100110; 0x23h = 0100011; 0x27 = 0100111

For the TPS25762-Q1 device, a factory-programmed default application configuration is applied at power-up. The default application configuration is applied when the boot mode is configured for EEPROM and the EEPROM configuration is not loaded; for example when the image provided by the EEPROM is not valid or the EEPROM is not connected.

Applies to TPS25762DQRQLRQ1 and TPS25772DQRQLRQ1: When the default application configuration is loaded, the maximum port output power (port PDP) is configured using the TVSP index as defined by R_{TVSP}. Valid TVSP indexes for this mode of operation are shown in "R_{TVSP} Port Maximum PDP Selection (TPS25762DQRQLRQ1 and TPS25772DQRQLRQ1)" and functional settings are shown in "Default Application Configuration (TPS25762DQRQLRQ1 and TPS25772DQRQLRQ1".

Table 8-6. R_{TVSP} Port Maximum PDP Selection (TPS25762DQRQLRQ1 and TPS25772DQRQLRQ1)

R_{TVSP} (kΩ)	TVSP Index	ADC Value	I2C Target Port Addresses (A | B)	I2C Logic (V_{DD})	Port Maximum PDP
Open	0	≤ 10 (0x0A)	0x22 | 0x26	3.3V	60 W
47.5	2	≤ 42 (0x2A)	0x22 | 0x26	1.8V	45 W
18.2	4	≤ 89 (0x59)	0x23 | 0x27	3.3V	27 W
9.53	6	≤ 156 (0x9C)	0x23 | 0x27	1.8V	15 W

The device settings when the default application configuration is loaded are defined by the settings in "Default Application Configuration".

Table 8-7. Default Application Configuration (TPS25762DQRQLRQ1 and TPS25772DQRQLRQ1)

Parameter	TPS25762DQRQLRQ1	TPS25772DQRQLRQ1	Comment
XID	0x00	0x00	
PID	0x00	0x00	
VID	0x0451	0x0451	TI VID
Port min power	7.5W	7.5W	Applies to all ports
Port max power	60W/45W/27W/15W	60W/45W/27W/15W	Set by TVSP index; applies to all ports
System max power	60W/45W/27W/15W	Port max power x 2	
Port PPS	Enabled	Enabled	Applies to all ports
SPM power policy	n/a	Assured capacity	
BC1.2	Enabled	Enabled	Applies to all ports
External DCDC	n/a	TPS55288-Q1	I2C address = 0x75
Port A ILIM overshoot	400mA	400mA	
Port A APDO ILIM overshoot	50mA	50mA	
Port A Cable compensation	Disabled	Disabled	
Port A high ILIM delay	Enabled	Enabled	
Port B ILIM overshoot	n/a	400mA	

Copyright © 2026 Texas Instruments Incorporated

Table 8-7. Default Application Configuration (TPS25762DQRQLRQ1 and TPS25772DQRQLRQ1) (continued)

Parameter	TPS25762DQRQLRQ1	TPS25772DQRQLRQ1	Comment
Port B APDO ILIM overshoot	n/a	50mA	
Port B cable compensation	n/a	External	Set by external DCDC
Port B VBUS boost	n/a	0.1V	
Port B discharge (GPIO)	n/a	Enabled	External, controlled by GPIO9
Internal DCDC frequency	400kHz	400kHz	
Internal DCDC dither	10Hz	10Hz	
Grace period power ON	15min	15min	
Grace period power OFF	15min	15min	
Range 3 power	FULL	FULL	
Range 2 power	60%	60%	% of system max power
Range 1 to 2 rising threshold	8.96V	8.96V	Measured at VIN
Range 2 to 1 falling threshold	7.04V	7.04V	Measured at VIN
Range 2 to 3 rising threshold	11.52V	11.52V	Measured at VIN
Range 3 to 2 falling threshold	10.08V	10.08V	Measured at VIN
Thermal foldback	Enabled	Enabled	NTC/PTC configuration
Phase 1 max power	60%	60%	% of System Max Power
Phase 1 rising threshold	2.044 V	2.044V	
Phase 1 falling threshold	1.988V	1.988V	
Phase 2 max power	30%	30%	% of System Max Power
Phase 2 rising threshold	2.1V	2.1V	
Phase 2 falling threshold	2.044V	2.044V	
Phase 3 max power	0%	0%	% of System Max Power
Phase 3 rising threshold	2.142V	2.142V	
Phase 3 falling threshold	2.086V	2.086V	

Applies to TPS25762FQRQLRQ1 and TPS25772FQRQLRQ1: When the default application configuration is loaded, the maximum port output power and functional settings are set by the default application configuration as shown in "Default Application Configuration (TPS25762FQRQLRQ1 and TPS25772FQRQLRQ1)".

Table 8-8. Default Application Configuration (TPS25762FQRQLRQ1 and TPS25772FQRQLRQ1)

Parameter	TPS25762FQRQLRQ1	TPS25772FQRQLRQ1	Comment
XID	0x00	0x00	
PID	0x00	0x00	
VID	0x0451	0x0451	TI VID
Port min power	15W	15W	Applies to all ports
Port max power	15W	15W	Applies to all ports
System max power	15W	30W	
Port PPS	n/a	n/a	Applies to all ports
SPM power policy	n/a	Assured capacity	
BC1.2	Enabled	Enabled	Applies to all ports
External DCDC	n/a	TPS55389-Q1	I2C address = 0x75
Port A ILIM overshoot	400mA	400mA	Applies to fixed PDOs, AVS
Port A APDO ILIM overshoot	n/a	n/a	
Port A Cable compensation	Disabled	Disabled	
Port A VBUS boost	0V	0V	

Copyright © 2026 Texas Instruments Incorporated

Table 8-8. Default Application Configuration (TPS25762FQRQLRQ1 and TPS25772FQRQLRQ1) (continued)

Parameter	TPS25762FQRQLRQ1	TPS25772FQRQLRQ1	Comment
Port A high ILIM delay	Enabled	Enabled	
Port B ILIM overshoot	n/a	400mA	Applies to fixed PDOs, AVS
Port B APDO ILIM overshoot	n/a	n/a	
Port B cable compensation	n/a	Disabled	
Port B VBUS boost	n/a	0V	
Port B discharge (GPIO)	n/a	Disabled	Controlled by DCDC
Internal DCDC frequency	400kHz	400kHz	
Internal DCDC dither	10Hz	10Hz	
Grace period power ON	15min	15min	
Grace period power OFF	15min	15min	
Range 3 power	FULL	FULL	
Range 2 power	100%	50%	% of system max power
Range 1 to 2 rising threshold	8.0V	8.0V	Measured at VIN
Range 2 to 1 falling threshold	5.92V	5.92V	Measured at VIN
Range 2 to 3 rising threshold	11.52V	11.52V	Measured at VIN
Range 3 to 2 falling threshold	10.08V	10.08V	Measured at VIN
Thermal foldback	Disabled	Enabled	NTC/PTC configuration
Phase 1 max power	100%	50%	% of System Max Power
Phase 1 rising threshold	2.044 V	2.044V	
Phase 1 falling threshold	1.988V	1.988V	
Phase 2 max power	100%	50%	% of System Max Power
Phase 2 rising threshold	2.1V	2.1V	
Phase 2 falling threshold	2.044V	2.044V	
Phase 3 max power	0%	0%	% of System Max Power
Phase 3 rising threshold	2.142V	2.142V	
Phase 3 falling threshold	2.086V	2.086V	
GPIO0	No function	PB_CC1	
GPIO1	No function	PB_CC2	
GPIO2	No function	PB_DP	
GPIO3	No function	PB_DM	
GPIO4	No function	PB_VBUS	
GPIO5	NTC	NTC	
GPIO6	No function	SYNC_OUT	
GPIO7	PA_DM	PA_DM	
GPIO8	PA_DP	PA_DP	
GPIO9	No function	No function	

Applications requiring a configuration other than TVSP Index 0 (R_{TVSP} open), as shown in "R_{TVSP} Configuration Settings" must implement a circuit similar to the one shown in Figure 8-5. The base of the bipolar transistor is connected to LDO_5V to provide proper power up sequencing of the TVSP resistor - OFF when TPS25762-Q1 is disabled and ON when TPS25762-Q1 is enabled. A 2N2222 is recommended for its large collector-emitter breakdown voltage, low-cost and wide availability.

Copyright © 2026 Texas Instruments Incorporated

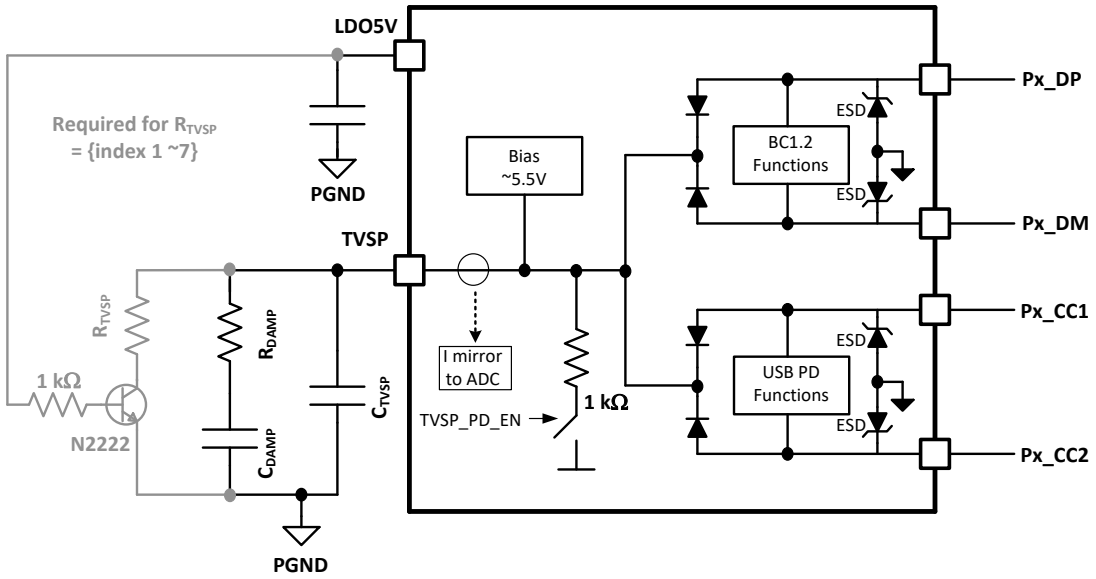

Figure 8-5. R_{TVSP} Circuit Configuration

In addition to EEPROM and external HUB/MCU, it is possible to update device firmware using the USB Endpoint on the PA_DP and PA_DM pins. To enable firmware update mode, boot the device with a resistance corresponding to TVSP Index 8 between TVSP and PGND. A boot cycle is performed by power cycling the device or by pulling the EN/UVLO pin momentarily below the $V_{EN(OPER)}$ threshold. An example circuit to enable USB Endpoint firmware update mode is shown in Figure 8-6.

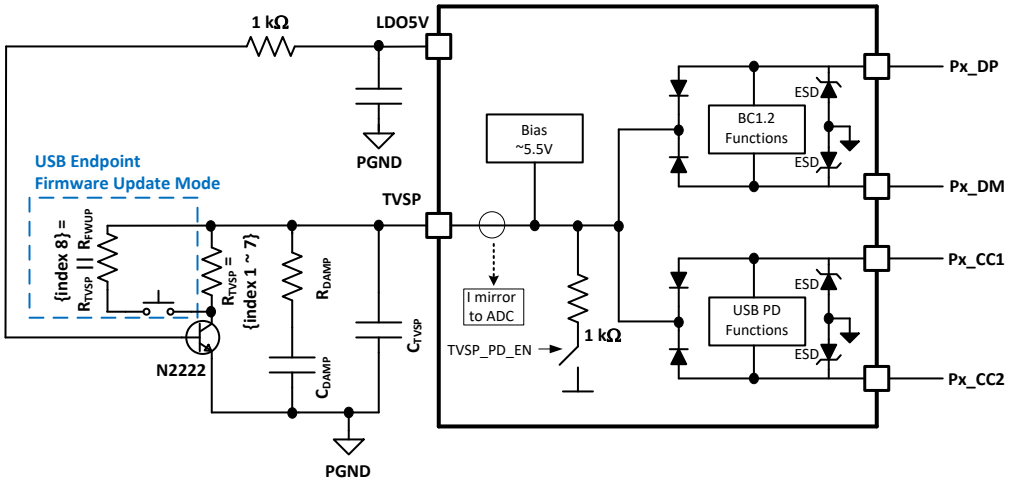

Figure 8-6. Example Circuit to Enable USB Endpoint Firmware Update Mode

8.3.3 Buck-Boost Regulator

8.3.3.1 Buck-Boost Regulator Operation

The TPS25762-Q1 devices utilize a fixed frequency, current mode control buck-boost converter. This converter operates in forced continuous conduction mode (CCM) and therefore allows inductor current to flow in either direction at light loads. The power train consists of five N-Channel power MOSFETs. See Figure 8-7. Transistors M1 and M2 are the high-side and low-side buck FETs. Transistors M3 and M4 are the high-side and low-side boost FETs. Transistor M5 blocks reverse conduction from OUT to SW2 during input overvoltage transients as explained in *VIN Supply and VIN Overvoltage Protection*.

- **IN:** Receives power from the battery. The input bulk capacitor must be connected between IN and PGND.

- **OUT:** Delivers power from the switching converter. The output bulk capacitor connects between OUT to PGND.
- **PGND:** Ground return for the switching converter power train.
- **AGND:** Ground return for everything except the power train. The voltage feedback divider returns to AGND. PGND and AGND must connect together on the circuit board.
- **LDO_5V:** Provides gate drive for M2 and M4 and current for the bootstrap circuits feeding BOOT1 and BOOT2. A bypass capacitor must connect from LDO_5V to PGND. See *Internal LDO Regulators* for more information on LDO_5V.
- **LDO_3V3:** Analog circuitry power supply. A bypass capacitor must connect from LDO_3V3 to AGND. See *Internal LDO Regulators* for more information on LDO_3V3.
- **BOOT1:** Provides gate drive for M1. A bootstrap capacitor must connect from BOOT1 to SW1.
- **BOOT2:** Provides gate drive for M3. A bootstrap capacitor must connect from BOOT2 to SW2.
- **SW1:** Connects M1 and M2 to external inductor.
- **SW2:** Connects M3 and M4 to external inductor.
- **CSP:** Positive terminal of average current sense amplifier. Connects to positive terminal of output bulk capacitor.
- **CSN/BUS:** Negative terminal of average current sense amplifier. A 10mΩ current sense resistor is externally connected from CSP to CSN/BUS.

Depending on the input voltage V_{IN} and the output voltage V_{OUT}, the converter operates in one of four different states, each of which is described in following sections.

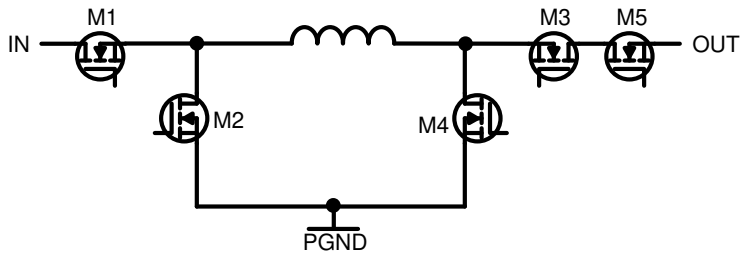

Figure 8-7. Buck-Boost Internal Power FETs

Buck State

When the input voltage V_{IN} significantly exceeds the output voltage V_{OUT}, the converter enters the buck region of operation in which it performs an endless series of buck switching cycles Buck State. M3 and M5 are constantly on and M4 is constantly off. When the clock signals that a switching cycle has begun, the controller turns on M2 and turns off M1. This switch configuration corresponds to the off-time interval of a traditional buck converter. The voltage difference $V_{SW1} – V_{SW2}$ across the inductor equals $–V_{OUT}$. The inductor current IL ramps down until it reaches a threshold I_{VALLEY} set by the error amplifiers. The controller then turns off M2 and turns on M1. This switch configuration corresponds to the on-time interval of a traditional buck converter. The voltage difference $V_{SW1} – V_{SW2}$ now equals $V_{IN} – V_{OUT}$. The inductor current now ramps up until the converter clock signals that the end of the switching cycle has been reached.

The on-time t_{on} equals the time interval during which M1 conducts. The off-time t_{off} equals the time interval during which M2 conducts. Because the converter operates in FCCM, the period τ equals the sum of t_{on} and t_{off}. During the buck state, the controller regulates power flow by adjusting the buck duty cycle D, which equals the ratio t_{on}/τ.

Copyright © 2026 Texas Instruments Incorporated

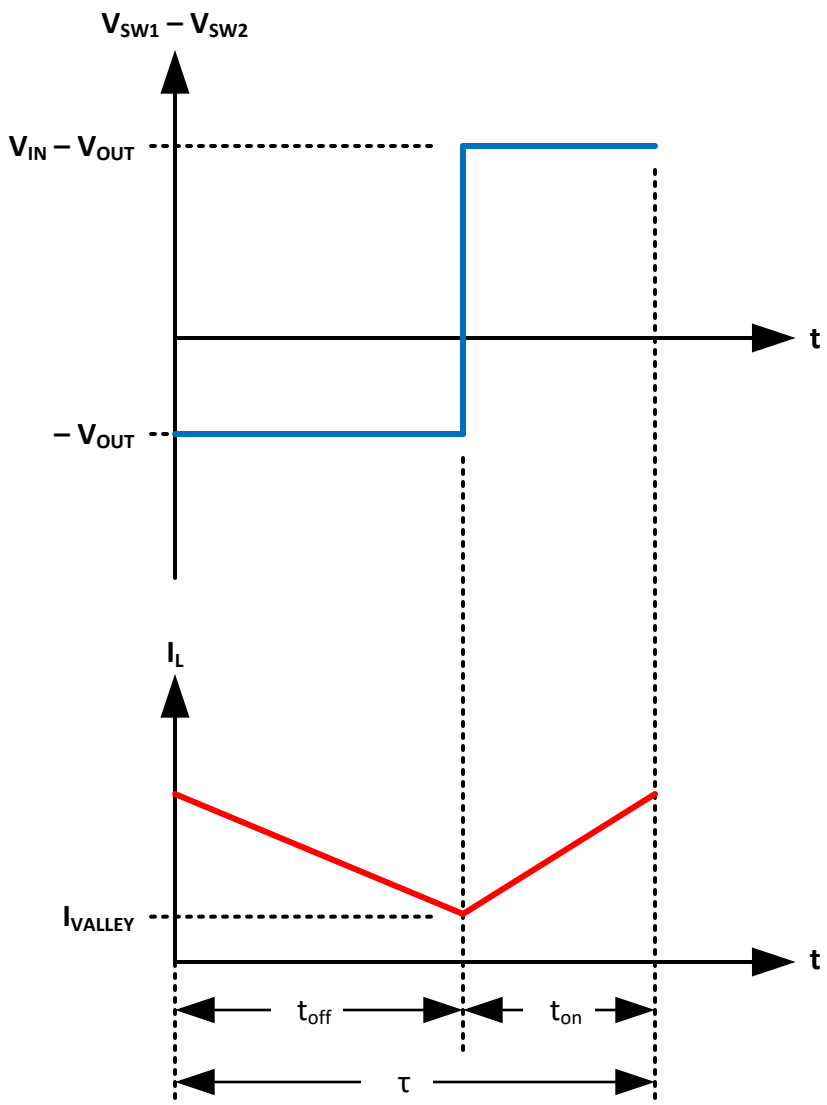

Figure 8-8. Buck State

Buck Transition State

When the input voltage V_{IN} is only slightly larger than the output voltage V_{OUT}, the converter enters the buck transition region of operation in which it alternately performs buck and boost switching cycles Buck Transition. M5 is always on. When the clock signals that a buck switching cycle has begun, the controller turns on M2 and M3, and it turns off M1 and M4. This switch configuration corresponds to the off-time of a traditional buck converter. The inductor current I_L ramps down until it reaches a threshold I_{VALLEY} set by the error amplifiers. The controller then turns off M2 and turns on M1. This switch configuration corresponds to the on-time of a traditional buck converter. The inductor current now ramps up slowly until the clock signals the end of the buck switching cycle. The next switching cycle is a boost switching cycle. When this cycle begins, the controller turns M3 off and turns M4 on. M2 remains off, and both M1 and M5 remain on. This switch configuration corresponds to the on-time of a traditional boost converter. The inductor current I_L now ramps up rapidly until the fixed on-time expires. The controller then turns off M4 and turns on M3. The inductor current now ramps down until the clock signals the end of the boost switching cycle. The next switching cycle is another buck cycle.

During the buck transition state, the controller regulates power flow by adjusting the buck duty cycle. The boost duty cycle remains fixed. If the converter remains in the buck state rather than move to the buck transition state, the buck on-time becomes so short that it is impossible to regulate power flow without pulse skipping.

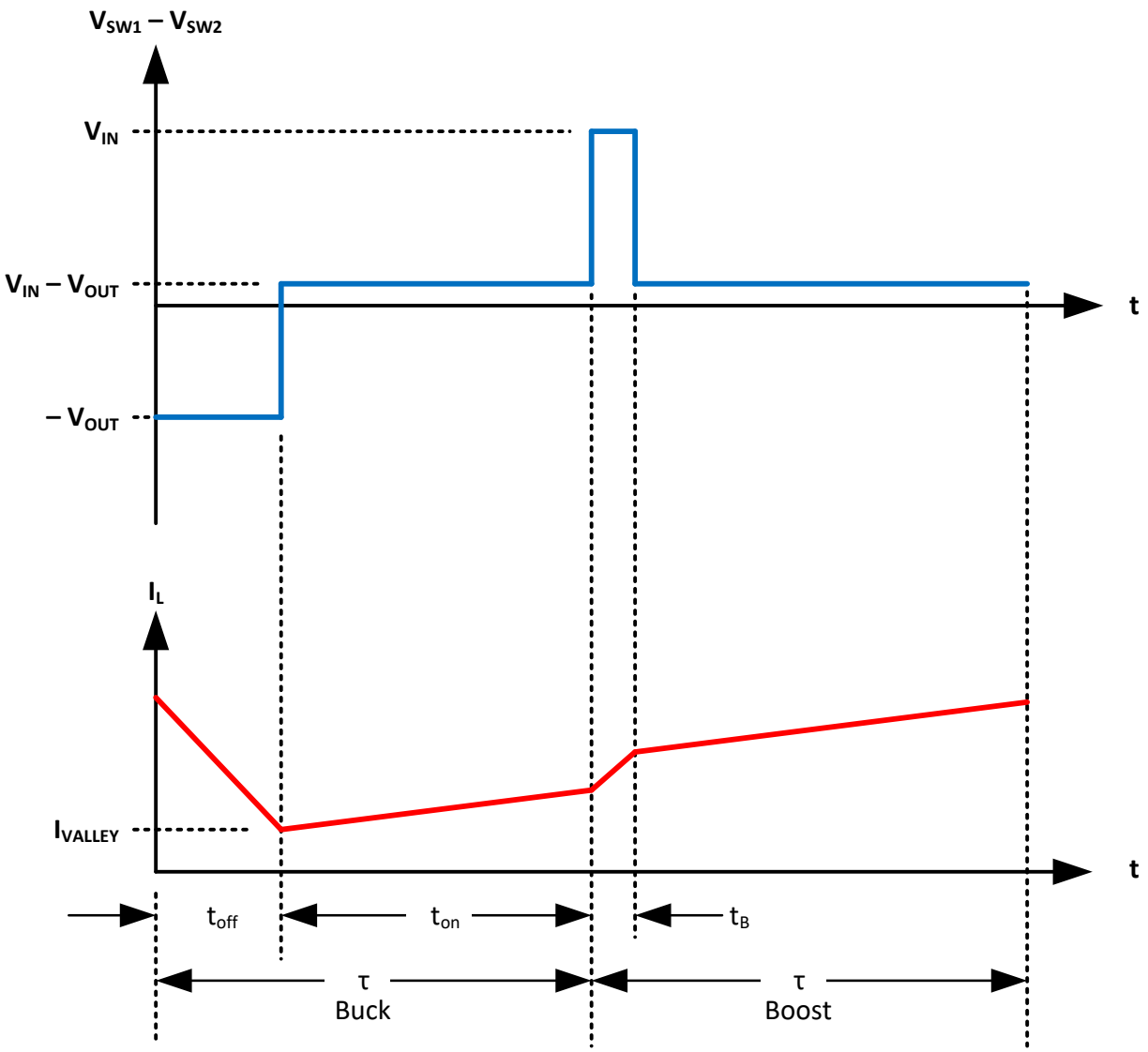

Figure 8-9. Buck Transition

Boost Transition State

When the input voltage V_{IN} is only slightly smaller than the output voltage V_{OUT}, the converter enters the boost transition region of operation in which it alternately performs boost and buck switching cycles Boost Transition. M5 is always on. When the clock signals that a boost switching cycle has begun, the controller turns on M1 and M4, and it turns off M2 and M3. This switch configuration corresponds to the on-time of a traditional boost converter. The inductor current I_L ramps up until it reaches a threshold I_{PEAK} set by the error amplifiers. The controller then turns off M4 and turns on M3. This switch configuration corresponds to the off-time of a traditional boost converter. The inductor current now ramps down slowly until the clock signals the end of the boost switching cycle. The next switching cycle is a buck switching cycle. When this cycle begins, the controller turns M1 off and turns M2 on. M4 remains off, and both M3 and M5 remain on. This switch configuration corresponds to the off-time of a traditional buck converter. The inductor current I_L now ramps down rapidly until the fixed

Copyright © 2026 Texas Instruments Incorporated

off-time expires. The controller then turns off M2 and turns on M1. The inductor current now ramps up until the clock signals the end of the buck switching cycle. The next switching cycle is another boost cycle.

During the boost transition state, the controller regulates power flow by adjusting the boost duty cycle. The buck duty cycle remains fixed. If the converter remains in the boost state rather than move to the boost transition state, the boost on-time is so short that it is impossible to regulate power flow without pulse skipping.

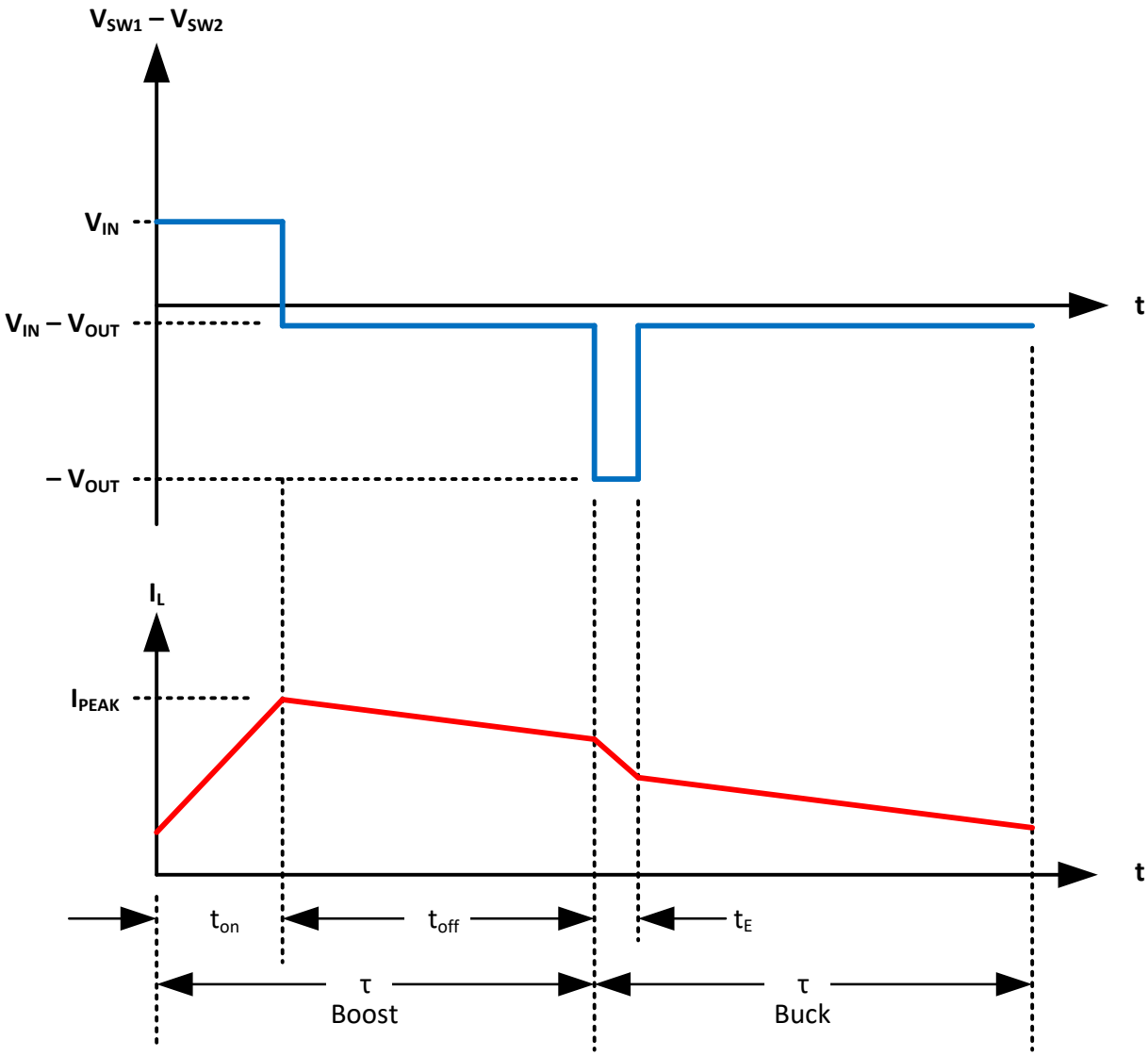

Figure 8-10. Boost Transition

Boost State

When the input voltage V_{IN} is significantly less than the output voltage V_{OUT}, the converter enters the boost region of operation in which it performs an endless series of boost switching cycles Boost State. M1 and M5 are constantly on and M2 is constantly off. When the clock signals that a switching cycle has begun, the controller turns on M4 and turns off M3. This switch configuration corresponds to the on-time interval of a traditional boost converter. The voltage difference $V_{SW1} – V_{SW2}$ across the inductor equals V_{IN}. The inductor current I_L ramps up until it reaches a threshold I_{PEAK} set by the error amplifiers. The controller then turns off M4 and turns on M3. This switch configuration corresponds to the off-time interval of a traditional boost converter. The voltage

difference $V_{SW1} – V_{SW2}$ now equals $V_{IN} – V_{OUT}$, which is negative. The inductor current now ramps down until the converter clock signals that the end of the switching cycle has been reached.

The on-time t_{on} equals the time interval during which M4 conducts. The off-time t_{off} equals the time interval during which M3 conducts. Because the converter operates in FCCM, the period τ equals the sum of t_{on} and t_{off}. During the boost state, the controller regulates power flow by adjusting the boost duty cycle D, which equals the ratio t_{on}/τ.

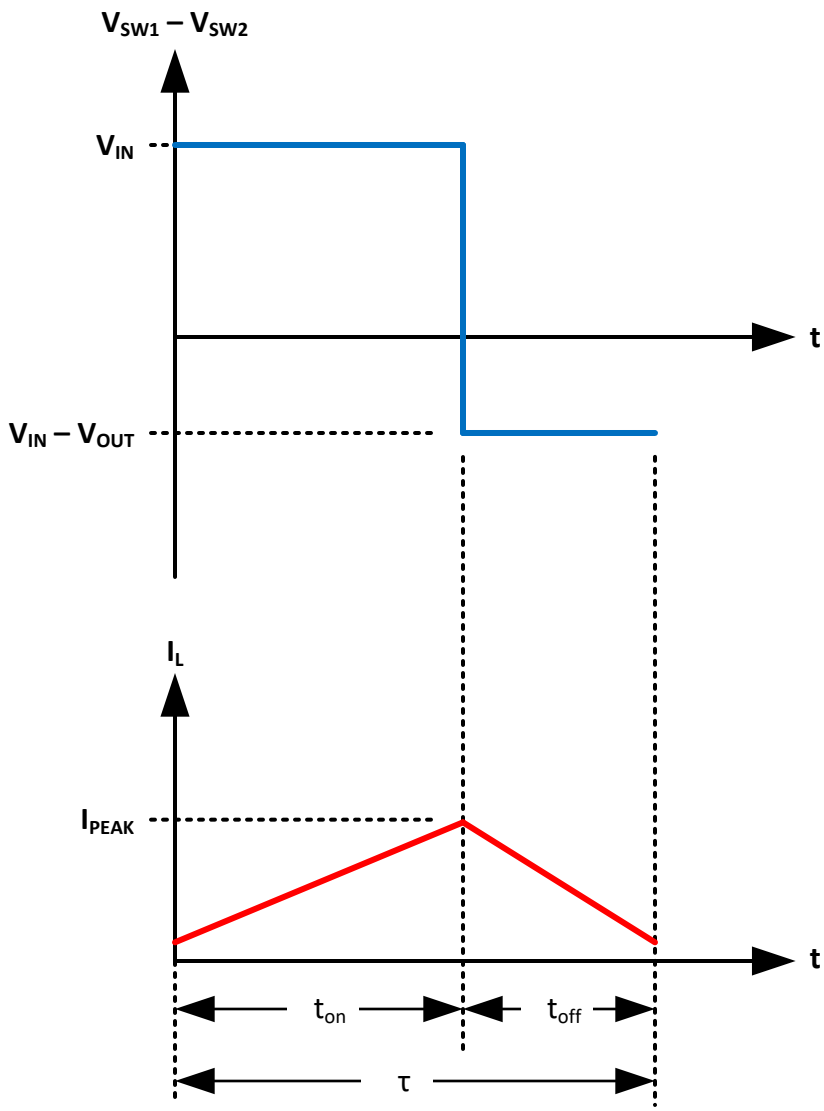

Figure 8-11. Boost State

Boundaries of the Regions of Operation

Regions of Operation graphically depicts the four regions of operation and the boundaries between them. When $V_{BUS} > kV_{IN}$, the converter remains in the boost region of operation. The value k is 1.2. When $V_{IN} < V_{BUS} < kV_{IN}$, the converter enters the boost transition region of operation. When $V_{IN}/k < V_{BUS} < V_{IN}$, the converter enters the buck transition region of operation. When $V_{BUS} < V_{IN}/k$, the converter enters the buck region of operation. The converter ceases operating if V_{IN} exceeds the OVP threshold, which lies between 18 and 20V. Similarly, the converter also ceases operating if V_{IN} drops below either the internal UVLO threshold, which lies between 5 and 5.5V, or the user programmed EN/UVLO threshold (see *VIN UVLO and ENABLE/UVLO*, whichever is greater).

Copyright © 2026 Texas Instruments Incorporated

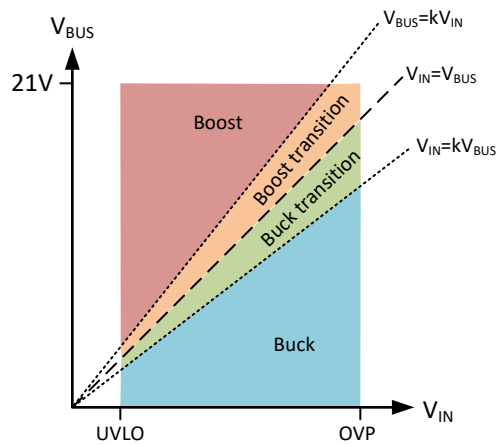

Figure 8-12. Regions of Operation

8.3.3.2 Switching Frequency, Frequency Dither, Phase-Shift and Synchronization

The PWM oscillator frequency (f_{sw}) is programmed by firmware using the application configuration GUI. The switching converter is intended for operation below the AM radio band (520kHz - 1730kHz). Three nominal f_{sw} settings below are available: 300kHz, 400kHz and 450kHz.

Frequency dithering is enabled by firmware via the application GUI. When enabled, the nominal oscillator frequency is dithered by $\pm FS_{SS}$ (approximately ±10%) using triangular waveform modulation (see Dithering using triangular waveform modulation). The dither period τ_M is the reciprocal of the dither modulation frequency FS_{SS_MOD}. Two firmware selectable dither modulation frequencies FS_{SS_M} are available: 10 and 25kHz. Dithering spreads the spectral peaks generated by switching, thereby reducing the peak harmonic levels and easing EMI filter design.

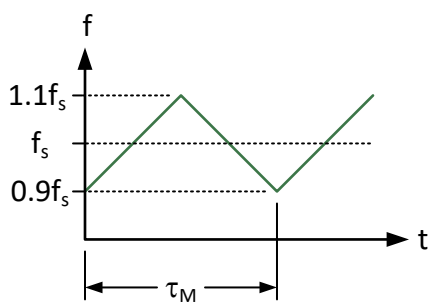

Figure 8-13. Dithering Using Triangular Waveform Modulation

Synchronize multiple converters using the SYNC pin. This pin is firmware-configurable as an output SYNC(o) or an input SYNC(i).

- **SYNC(o):** The switching clock is placed on the SYNC(o) pin. This waveform has a duty cycle of approximately 50%. If frequency dithering is configured by firmware, this signal also exhibits dithering. Four phase settings are available by firmware configuration to shift the SYNC(o) output relative to the internal switching clock by 0°, 90°, 120°, or 180°. SYNC(o) is used to drive an external DC/DC converter clock with the switching converter clock inside the TPS25762-Q1. When two dc/dc converters operate out of phase, peak input current from the battery is reduced and total input bulk capacitance requirements decrease.

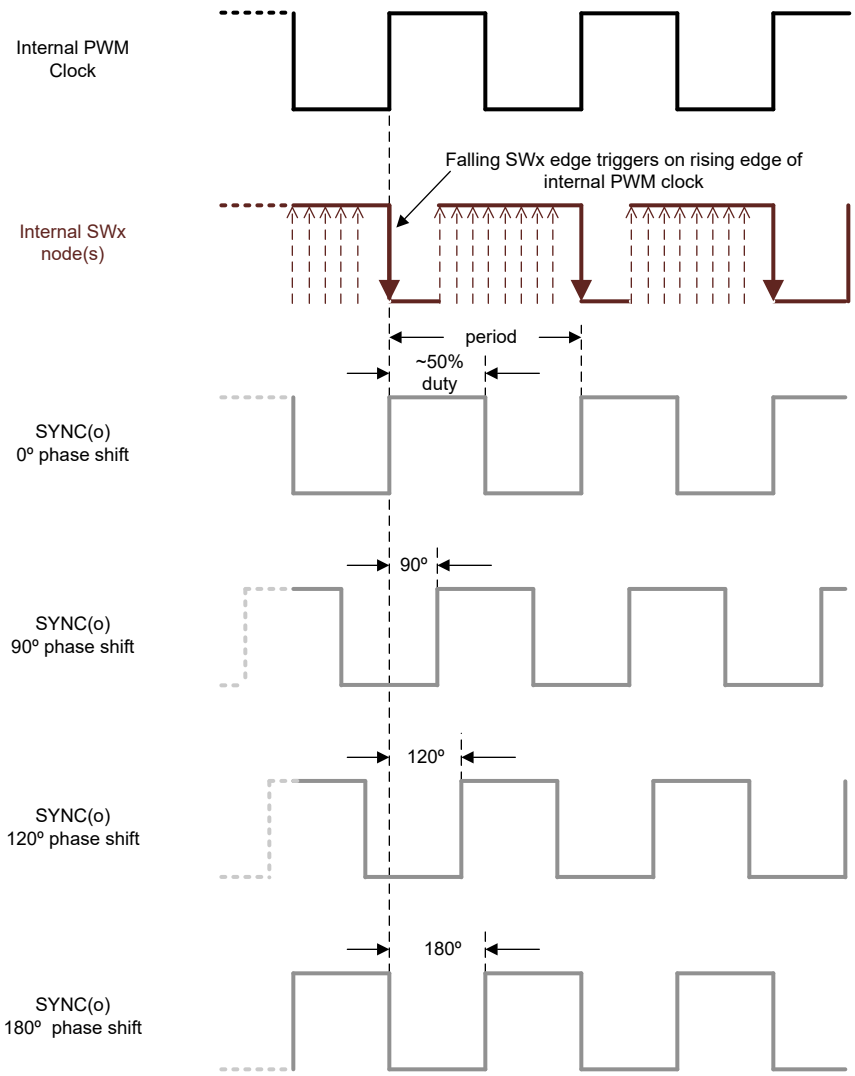

Figure 8-14. SYNC(o) Phase Shift

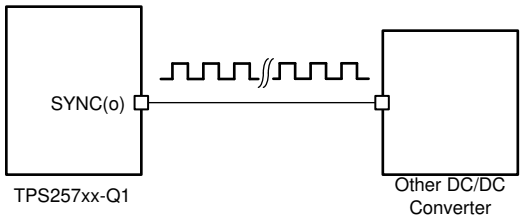

Figure 8-15. Using SYNC(o) to drive external DC/DC Converter

- **SYNC(i):** The internal clock is synchronized to the pulse train on the SYNC(i) pin. This feature is used to drive the TPS25762-Q1 with an external clock. The period of this clock must meet synchronization requirements in SYNC(i) frequency ranges or the TPS25762-Q1 instead uses its internal switching clock. If an external clock deviates outside of the acceptable frequency range and then returns to within the acceptable frequency range, the TPS25762-Q1 resumes operation from the external clock after counting 8 consecutive clocks meeting the criteria of Table 8-9. When SYNC(i) is configured, frequency dithering is disabled when operating from the internal clock following a failure of the external clock.

Copyright © 2026 Texas Instruments Incorporated

Table 8-9. SYNC(i) Frequency Ranges

f_{SW} Firmware Setting	Allowed SYNC(i) Frequency Range	
	MIN	MAX
300kHz	250kHz	353kHz
400kHz	334kHz	470kHz
450kHz	376kHz	530kHz

8.3.3.3 VIN Supply and VIN Overvoltage Protection

V_{IN} Supply

The voltage V_{IN} at the input supply pin IN, measured with respect to AGND, must meet the following requirements:

- **Overvoltage:** The voltage V_{IN} must never exceed an absolute maximum of 40V, and cannot exceed 36V under anticipated operating conditions. Automotive applications typically require an external transient suppressor to meet this requirement.
- **Load dump:** When the converter is running and V_{IN} exceeds 18 V, the positive slew rate dV_{IN}/dt must not exceed 200V/ms.
- **Double battery:** When the converter is not running, the positive slew rate dV_{IN}/dt must not exceed 10V/µs. The input EMI filter helps mitigate input voltage slew rates.
- **Reverse battery:** The voltage V_{IN} must never go below –0.3V. Automotive applications typically require external reverse voltage blocking circuitry.

The buck-boost switching converter is capable of delivering its full rated output power of 65W over an input supply range 6.8V < V_{IN} < 18V . The input voltage is allowed to dip down to the UVLO threshold when the output power level is appropriately derated.

V_{IN} Overvoltage Protection Circuitry

The TPS25762-Q1 contains circuitry that protects the power train against load dump and double battery conditions. When VIN exceeds approximately 19V, a comparator determines that an input overvoltage condition has occurred. This comparator sends a signal that shuts the switching converter down. Transistors M1, M2, and M3 in Buck-Boost Internal Power FETs are turned off, and transistor M4 is turned on. However, current is still flowing through the inductor. Two cases exist: the current flows forward (from SW1 to SW2) or in reverse (from SW2 to SW1). Reverse current flow forward biases the body diode of M1. The voltage across the inductor then equals the sum of the forward voltage of this diode plus the input voltage, which is sufficient to cause the inductor voltage to rapidly ramp down to zero. Forward current flow forward biases the body diode of M2. After the inductor current is released, a small linear regulator biases SW1 to approximately 15V. When the overvoltage condition is removed, the switching regulator resumes operation.

8.3.3.4 Feedback Paths and Error Amplifiers

The TPS25762-Q1 includes not only a programmable voltage feedback path, but also a programmable average current feedback path that is used to limit the average current provided by the switching converter to the USB cable. The voltage feedback path also includes provision for cable droop compensation. Simplified block diagram of feedback paths and error amplifiers shows a simplified block diagram of the relevant portions of the integrated circuit.

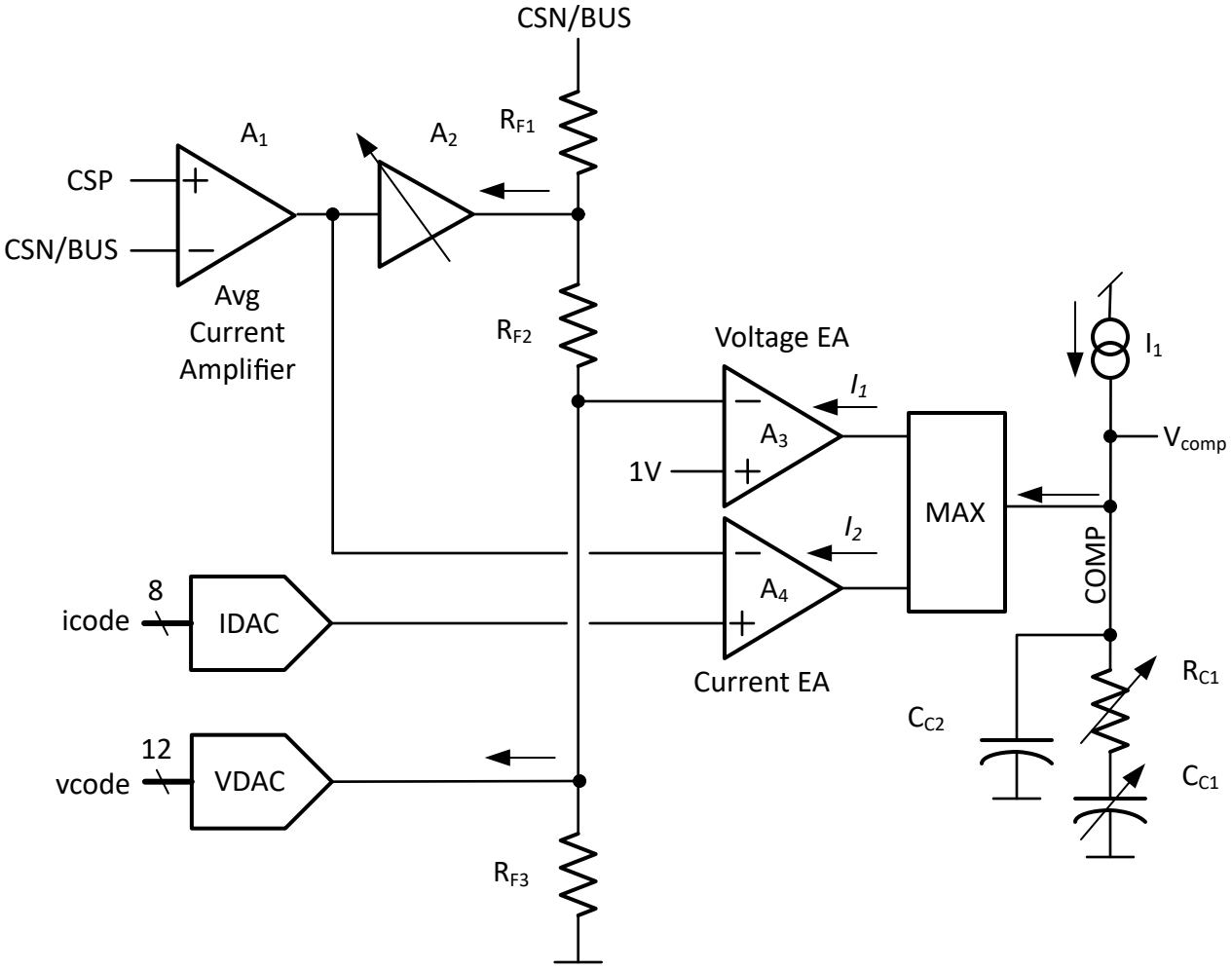

Figure 8-16. Simplified block diagram of feedback paths and error amplifiers.

8.3.3.5 Transconductors and Compensation

The TPS25762-Q1 is internally compensated. The overall slope compensation and loop compensation is internally fixed based on inductor and capacitance values shown in Table 9-1.

8.3.3.6 Output Voltage DAC, Soft-Start and Cable Droop Compensation

The buck-boost output voltage is regulated at the CSN/VBUS pin. A 12-bit digital-to-analog converter, VDAC, provides ±20mV step voltage adjustments of $V_{CSP/BUS}$ as commanded by device firmware.

After a successful cable detect event, firmware sets the VDAC to output 5V as measured on the $V_{CSN/BUS}$ output. An internal clock steps up the VDAC codes from an initial 0V to final 5V setting producing a monotonic ramp of $V_{CSN/BUS}$ to 5V at t_{SS}.

In some applications, the USB-PD controller is located 1m, or more, from the USB receptacle. When configured and enabled by firmware, cable droop compensation increases the $V_{CSP/BUS}$ linearly with increasing load current independent of the VDAC setting. Four selectable V_{OUT_CDC} ranges are available. 500mV is the maximum supported cable droop voltage and it is disabled by default during USB-PD PPS contracts.

8.3.3.7 V_{BUS} Overvoltage Protection

A fixed threshold overvoltage comparator monitors the CSN/BUS pin for overvoltage conditions. When the V_{CSN/BUS_OVP_R} threshold is exceeded, output OV protection circuitry turns off the internal MOSFETs. Switching resumes when $V_{CSN/BUS}$ decreases below V_{CSN/BUS_OVP_F}.

Copyright © 2026 Texas Instruments Incorporated

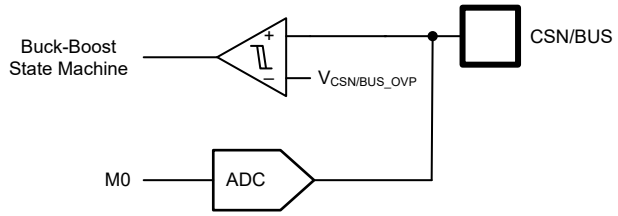

Figure 8-17. V_{BUS} OVP and UVP

8.3.3.8 V_{BUS} Undervoltage Protection

PA_VBUS undervoltage conditions are monitored by the internal ADC. In accordance with USB Power Delivery specifications, the TPS25762-Q1 firmware configures the threshold based on USB PD contract with the attached sink device.

8.3.3.9 Current Sense Resistor (R_{SNS}) and Current Limit Operation

The CSP and CSN/BUS pins are the positive and negative inputs to the average current sense amplifier (CSA). The TPS25762-Q1 devices sense port A load current across sense resistor, R_{SNS}, located between the CSP and CSN/BUS pins. A 10mΩ, 1%, power resistor provides a 0 - 50mV sense voltage over the range $0 \leq I_{OUT} \leq 5$ A.

A seven bit digital-to-analog converter, IDAC, provides ±50mA step current limit adjustments and is automatically programmed by device firmware.

8.3.3.10 Buck-Boost Peak Current Limits

The buck and boost peak current limits are adjustable by firmware using the application configuration GUI. Refer to the BUCK-BOOST PEAK CURRENT LIMITS in Buck Boost Regulator of the *Electrical Characteristics* tables for selectable values.

In most applications it is desirable to limit input current to the automotive USB module to protect module components, connectors and wiring from over-current conditions. The worst case input current condition occurs when V_{IN} is minimum and $V_{CSN/BUS}$ is maximum (21V) while supplying maximum 3.25A output current. When $V_{IN} < V_{BUS}$, the internal DC/DC converter is operating in boost mode. Refer to Table 9-6 to estimate the peak current versus recommended inductor value for the application.

Set the buck peak current limit selection slightly lower than the boost peak current limit. Setting the buck peak limit close to the boost peak current limit prevents the possibility of limit cycling between the two peak current limits under extreme transients. $I_{PEAK(BUCK)} \cong I_{PEAK(BOOST)}$.

When selecting an inductor, it is important to select one with an appropriate saturation current rating, $I_{L(SAT)}$. The inductor $I_{L(SAT)}$ rating must be larger than the maximum (MAX) $I_{PEAK(BOOST)}$ limit from the *Electrical Characteristics* tables to avoid excessive current flow in the TPS25762-Q1 or the inductor.

8.3.4 USB-PD Physical Layer

Figure 8-18 shows the USB PD physical layer block surrounded by a simplified version of the analog plug and orientation detection block. This block applies to Port A.

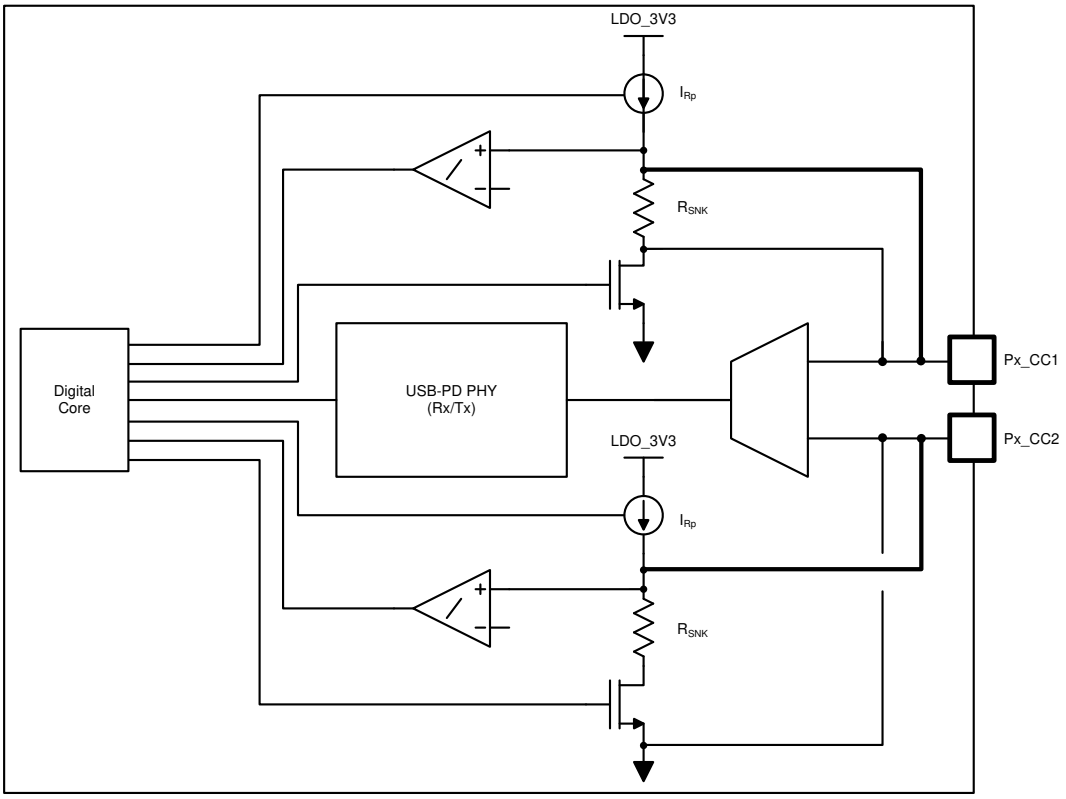

Figure 8-18. USB-PD Physical Layer and Simplified Plug and Orientation Detection Circuitry

USB-PD messages are transmitted in a USB Type-C system using a BMC (Biphase Mark Coding) signaling. The BMC signal is output on the same pin (Px_CC1 or Px_CC2) that is DC biased due to the Rp (or Rd) cable attach mechanism discussed in the *USB-PD BMC Transmitter* section.

8.3.4.1 USB-PD Encoding and Signaling

Figure 8-19 illustrates the high-level block diagram of the baseband USB-PD transmitter. Figure 8-20 illustrates the high-level block diagram of the baseband USB-PD receiver.

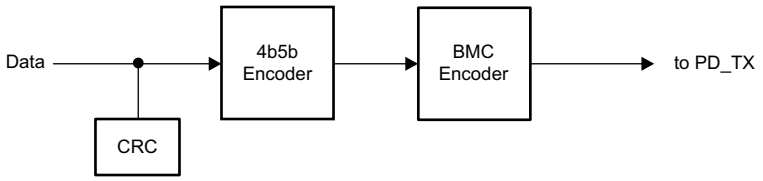

Figure 8-19. USB-PD Baseband Transmitter Block Diagram

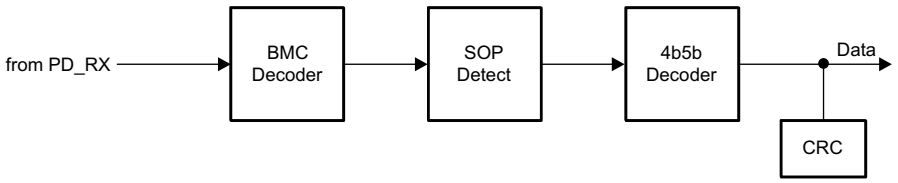

Figure 8-20. USB-PD Baseband Receiver Block Diagram

Copyright © 2026 Texas Instruments Incorporated

8.3.4.2 USB-PD Bi-Phase Marked Coding

The USB-PD physical layer implemented in the TPS25762-Q1 is compliant to the *USB-PD Specifications*. The encoding scheme used for the baseband PD signal is a version of Manchester coding called Biphase Mark Coding (BMC). In this code, there is a transition at the start of every bit time and there is a second transition in the middle of the bit cell when a 1 is transmitted. This coding scheme is nearly DC balanced with limited disparity (limited to 1/2 bit over an arbitrary packet, so a very low DC level). Figure 8-21 illustrates Biphase Mark Coding.

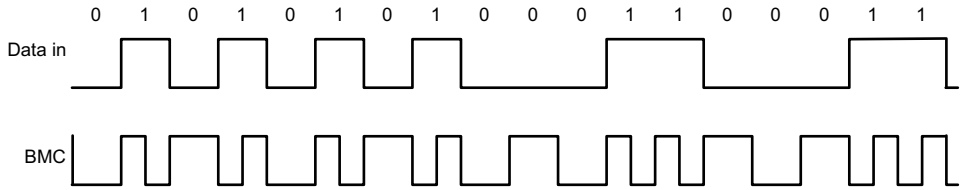

Figure 8-21. Biphase Mark Coding Example

The USB PD baseband signal is driven onto the Px_CC1 or Px_CC2 pin with a tri-state driver. The tri-state driver controls slew rate to limit coupling to D+/D– and to other signal lines in the Type-C fully featured cables. When sending the USB-PD preamble, the transmitter starts by transmitting a low level. The receiver at the other end tolerates the loss of the first edge. The transmitter terminates the final bit by an edge enabling the receiver to clock the final bit of EOP.

8.3.4.3 USB-PD Transmit (TX) and Receive (Rx) Masks

The USB-PD driver meets the defined USB-PD BMC TX masks. Since a BMC coded “1” contains a signal edge at the beginning and middle of the UI, and the BMC coded “0” contains only an edge at the beginning, the masks are different for each. The USB-PD receiver meets the defined USB-PD BMC Rx masks. The boundaries of the Rx outer mask are specified to accommodate a change in signal amplitude due to the ground offset through the cable. The Rx masks are therefore larger than the boundaries of the TX outer mask. Similarly, the boundaries of the Rx inner mask are smaller than the boundaries of the TX inner mask. Triangular time masks are superimposed on the TX outer masks and defined at the signal transitions to require a minimum edge rate that has minimal impact on adjacent higher speed lanes. The TX inner mask enforces the maximum limits on the rise and fall times. Refer to the *USB-PD Specifications* for more details.

8.3.4.4 USB-PD BMC Transmitter

The TPS25762-Q1 transmits and receives USB-PD data over one of the Px_CCy pins for a given CC pin pair (one pair per USB Type-C port). The Px_CCy pins are also used to determine the cable orientation (see the *Cable Plug and Orientation Detection* section) and maintain cable/device attach detection. Thus, a DC bias exists on the Px_CCy pins. The transmitter driver overdrives the Px_CCy DC bias while transmitting, but returns to a Hi-Z state allowing the DC voltage to return to the Px_CCy pin when not transmitting. While either Px_CC1 or Px_CC2 is used for transmitting and receiving, during a given connection only the one that mates with the CC pin of the plug is used; so there is no dynamic switching between Px_CC1 and Px_CC2. Figure 8-22 shows the USB-PD BMC TX and RX driver block diagram.

Copyright © 2026 Texas Instruments Incorporated

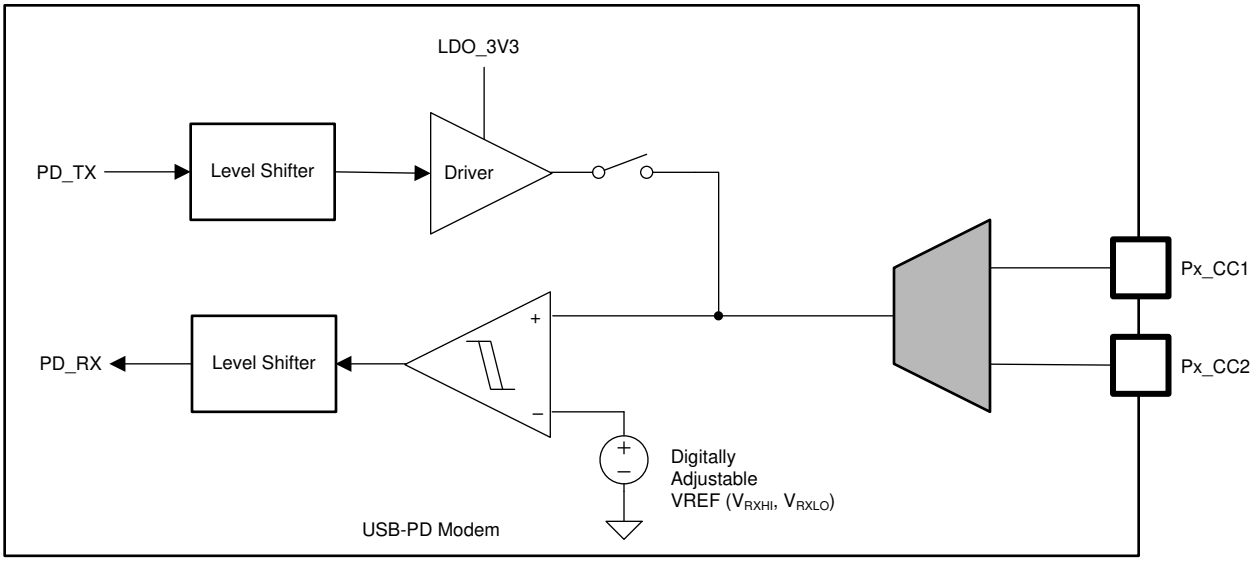

Figure 8-22. USB-PD BMC TX/Rx Block Diagram

Figure 8-23 shows the transmission of the BMC data on top of the DC bias. Note, the DC bias is between the minimum threshold for detecting a UFP attach and the maximum threshold for detecting a Sink attach to a Source. The resulting DC bias level is above or below the V_{OH} of the transmitter driver.

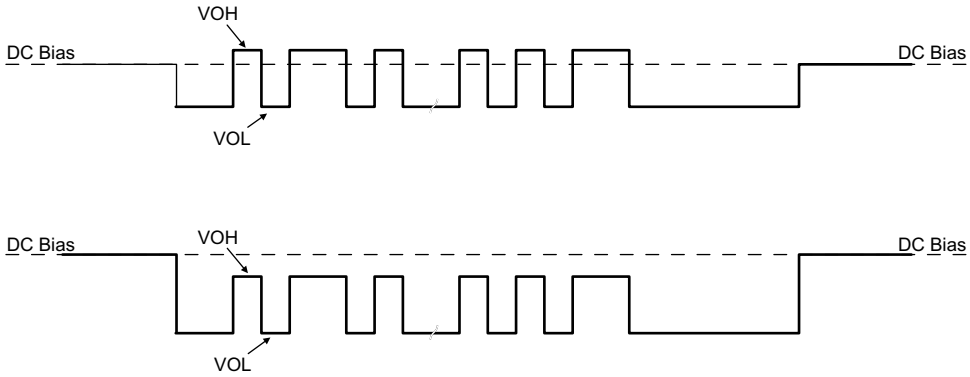

Figure 8-23. TX Driver Transmission with DC Bias

The transmitter drives a digital signal onto the Px_CCy lines. The signal peak, V_{TXHI}, is set to meet the TX masks defined in the *USB-PD Specifications*. Note that the TX mask is measured at the far-end of the cable.

When driving the line, the transmitter driver has an output impedance of Z_{DRIVER}. Z_{DRIVER} is determined by the driver resistance and the shunt capacitance of the source and is frequency dependent. Z_{DRIVER} impacts the noise ingression in the cable.

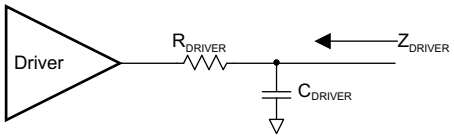

Figure 8-24. ZDRIVER Circuit

8.3.4.5 USB-PD BMC Receiver

The receiver block of the TPS25762-Q1 receives a signal that falls within the allowed Rx masks defined in the USB PD specification. The receive thresholds and hysteresis come from this mask.

Copyright © 2026 Texas Instruments Incorporated

Figure 8-25 shows an example of a multi-drop USB-PD connection (only the CC wire). This connection has the typical Sink (device) to Source (host) connection, but also includes cable USB-PD Tx/Rx blocks. Only one system transmits at any given time. All other systems are Hi-Z (Z_{BMCRX}). The *USB-PD Specification* specifies the capacitance on the CC wire as well as a typical DC bias setting circuit for attach detection.

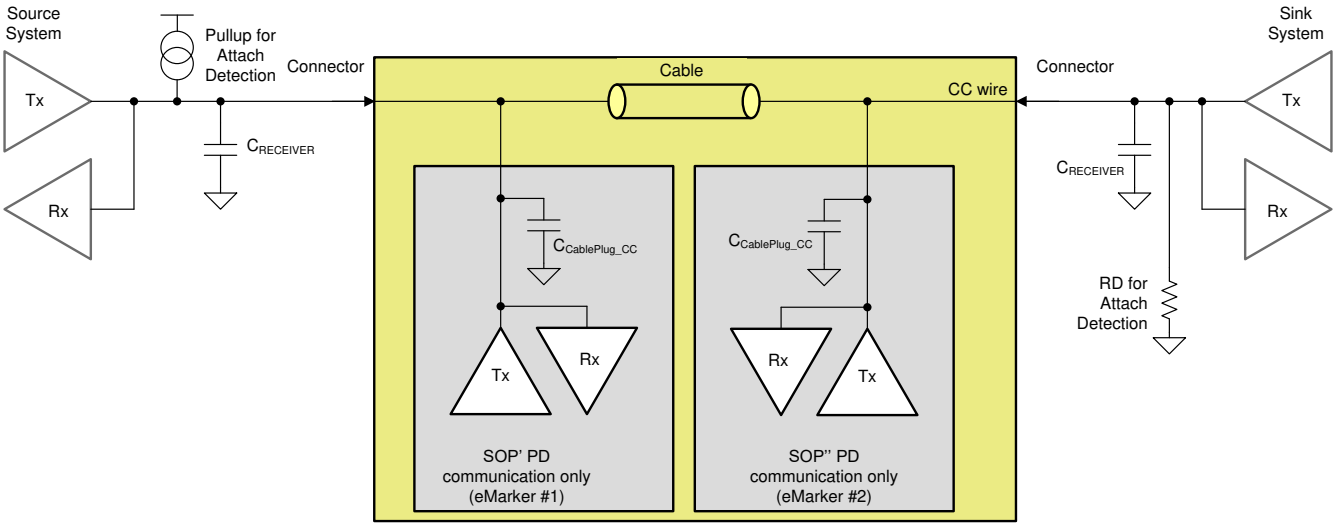

Figure 8-25. Example USB-PD Multi-Drop Configuration

8.3.4.6 Squelch Receiver

The TPS25762-Q1 has a squelch receiver to monitor for the bus idle condition as defined by the USB PD specification. The squelch receiver output reflects the state of the CC pin regardless of the source of the transmission.

8.3.5 VCONN

Internal VCONN sourcing power paths are firmware configurable. Using only the internal LDO_5V supply, PortA is able to draw 20mA continuously. If an external 5V regulator is connected to the LDO_5V pin and the application GUI settings are enabled, PortA is able to draw 200mA continuously. When disabled, blocking FETs in the PortA VCONN paths protect the LDO_5V rail from high-voltage and reverse current.

When VCONN power is enabled and provided, the internal VCONN power switches have a current limit of I_{LIMVC}. If the VCONN load current exceeds I_{LIMVC}, the current clamping circuit activates within $t_{iOS_PP_CABLE}$ and the switch behaves as a constant current source. Reverse current blocking is disabled when current is flowing to Px_CC1 or Px_CC2.

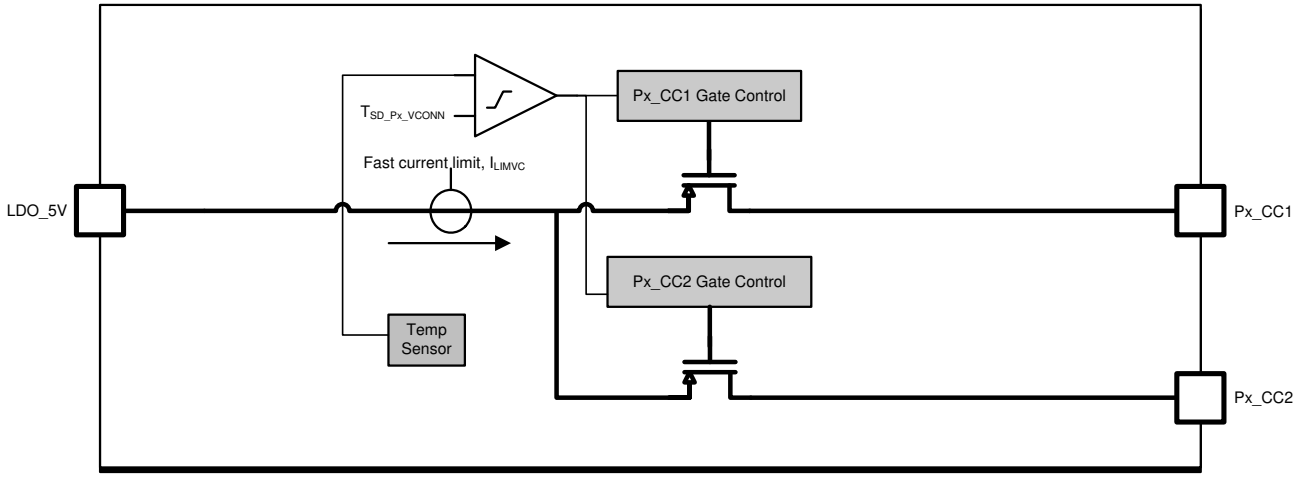

Figure 8-26. VCONN Power Switches

When operating in current limit, the VCONN FET temperature rises. Local temperature sensors disable the Px_VCONN path in current limit when T_{sensor} > $T_{SD_Px_VCONN}$ within $t_{PP_CABLE_off}$. The application firmware enters USB Type-C Error Recovery on the affected port.

LDO_5V must remain above its undervoltage lock out threshold ($V_{LDO_5V(UVLO_F)}$) for Px_VCONN operation. If the $V_{LDO_5V(UVLO_F)}$ threshold is reached, Px_VCONN paths are automatically disabled within $t_{PP_CABLE_off}$.

8.3.6 Cable Plug and Orientation Detection

Figure 8-27 shows the plug and orientation detection block at each Px_CCy pin (PA_CC1, PA_CC2, PB_CC1, PB_CC2). Each CC pin has identical detection circuitry.

When the port is operating as a Type-C source, the V_{REFx} nodes are multiplexed to the V_{SRC} thresholds corresponding to the advertised Type-C source capability current, $I_{Rp_}$.

When the port is operating as a Type-C sink, the V_{REFx} nodes are multiplexed to the V_{SNK} thresholds corresponding to sink detection.

Copyright © 2026 Texas Instruments Incorporated

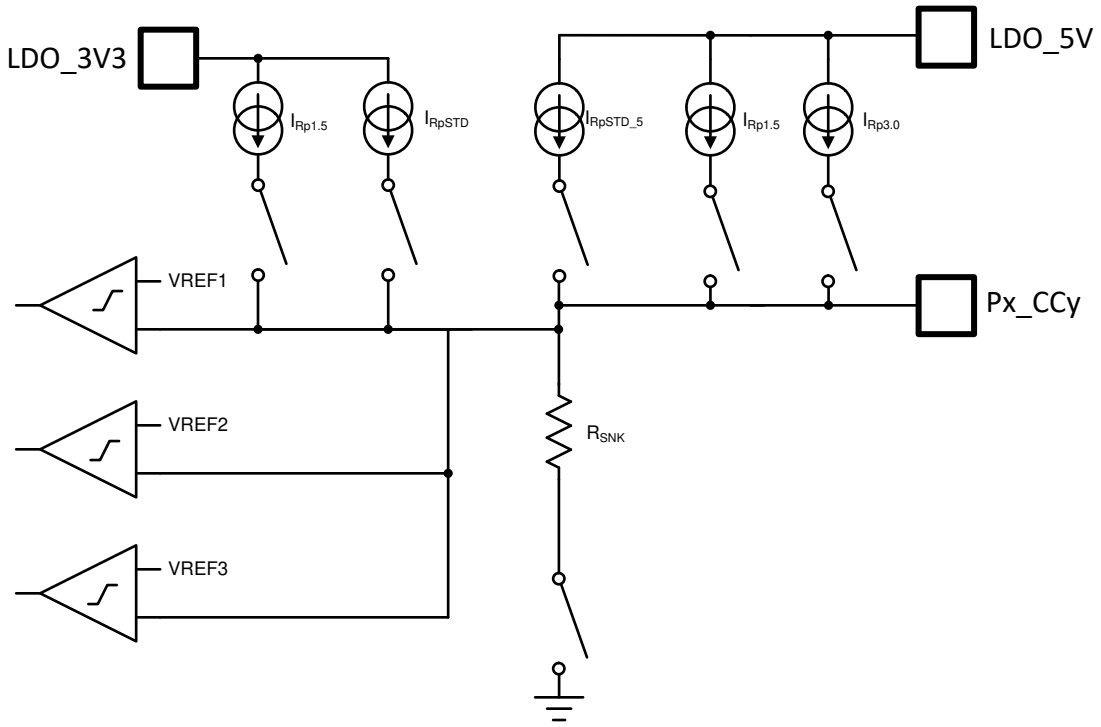

Figure 8-27. Plug and Orientation Detection Block

8.3.6.1 Configured as a Source

When Port A is configured as a Source, the device detects when a cable or a Sink is attached using the Px_CC1 and Px_CC2 pins. When in a disconnected state, the device monitors the voltages on these pins to determine what, if anything, is connected. See *USB Type-C Specification* for more information.

Table 8-10 shows the Cable Detect States for a Source.

Table 8-10. Cable Detect States for a Source

Px_CC1	Px_CC2	CONNECTION STATE	RESULTING ACTION
Open	Open	Nothing attached	Continue monitoring both Px_CCy pins for attach. Power is not applied to Px_VBUS or VCONN.
Rd	Open	Sink attached	Monitor Px_CC1 for detach. Power is applied to Px_VBUS but not to VCONN (Px_CC2).
Open	Rd	Sink attached	Monitor Px_CC2 for detach. Power is applied to Px_VBUS but not to VCONN (Px_CC1).
Ra	Open	Powered Cable-No UFP attached	Monitor Px_CC2 for a Sink attach and Px_CC1 for cable detach. Power is not applied to Px_VBUS or VCONN (Px_CC1).
Open	Ra	Powered Cable-No UFP attached	Monitor Px_CC1 for a Sink attach and Px_CC2 for cable detach. Power is not applied to Px_VBUS or VCONN (Px_CC2).
Ra	Rd	Powered Cable-UFP Attached	Provide power on Px_VBUS and VCONN (Px_CC1) then monitor Px_CC2 for a Sink detach. Px_CC1 is not monitored for a detach.
Rd	Ra	Powered Cable-UFP attached	Provide power on Px_VBUS and VCONN (Px_CC2) then monitor Px_CC1 for a Sink detach. Px_CC2 is not monitored for a detach.

When a port is configured as a Source, a current $I_{Rp1.5A}$, is driven out of each Px_CCy pin and each pin is monitored for different states. When a Sink is attached to the port a pull-down resistance of Rd to GND exists. The current $I_{Rp1.5A}$ is then forced across the resistance Rd generating a voltage at the Px_CCy pin. The device applies the configured $I_{Rp1.5A}$ until the buck-boost regulator is enabled and operating at 5V, at which time application firmware remains at $I_{Rp1.5A}$ or changes to $I_{Rp3.0A}$.

Copyright © 2026 Texas Instruments Incorporated

When the Px_CCy pin is connected to an electronically marked cable VCONN input, the pull-down resistance is different (Ra). In this case the voltage on the Px_CCy pin pulls below V_{RDstd} and the system recognizes the electronically marked cable.

The $V_{Dstd1.5}$ or $V_{D3.0}$ threshold is monitored to detect a disconnection depending upon which Rp current source is active. When a connection has been recognized and the voltage on Px_CCy subsequently rises above the disconnect threshold for t_{CC}, the system registers a disconnection.

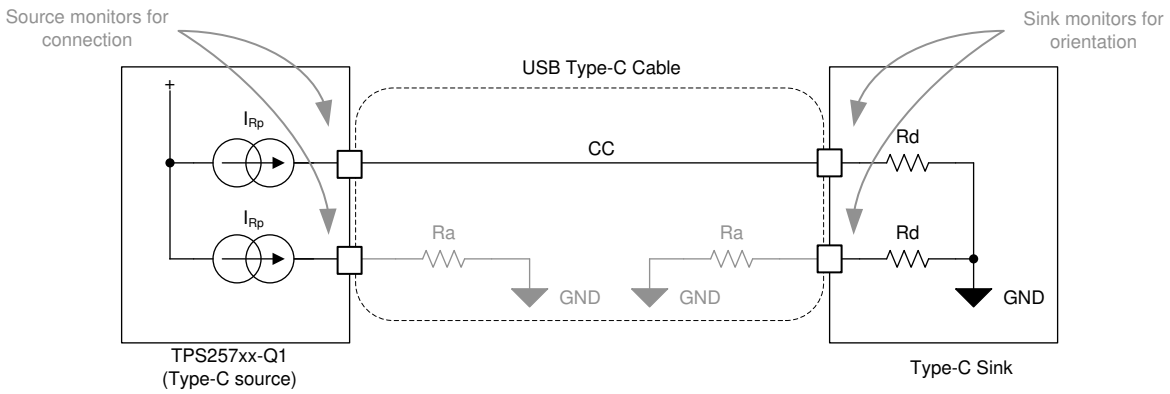

Figure 8-28. Type-C Cable

8.3.6.2 Configured as a Sink

When the TPS25762-Q1 port is configured as a Sink, such as in Firmware Update Mode with TVSP Index 8, the device presents a pull-down resistance R_{SNK} on each PA_CCy pin and waits for a Source to attach and pull-up the voltage on the pin. The Source pulls-up the PA_CCy pin by applying either a resistance or a current. The Sink detects an attachment by the presence of VBUS. The Sink determines the advertised current from the Source by the pull-up applied to the PA_CCy pin.

8.3.6.3 Overvoltage Protection (Px_CC1, Px_CC2)

Comparators on the Px_CCy pins detect when the voltage on CC1 or CC2 is too high, or there is reverse current into the LDO_5V output. During an overvoltage event, VCONN is disabled within tPP_CABLE_FSD and the associated USB PD transmitter is disabled.

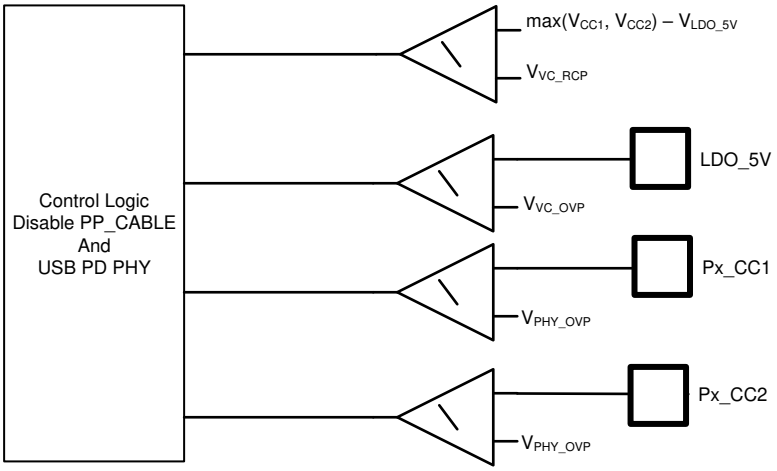

Figure 8-29. Overvoltage and Reverse Current Protection

Copyright © 2026 Texas Instruments Incorporated

8.3.7 ADC

The ADC is shown in Figure 8-30. The ADC is an 8-bit successive approximation ADC. The input to the ADC is an analog input mux that supports multiple inputs from various voltages and currents in the device. The output from the ADC is available to be read and used by application firmware.

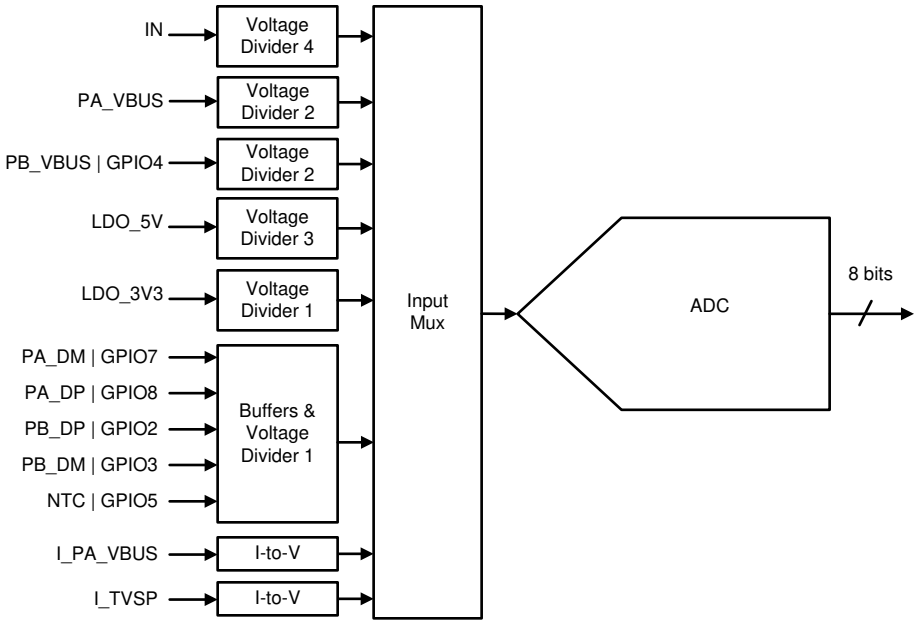

Figure 8-30. SAR ADC

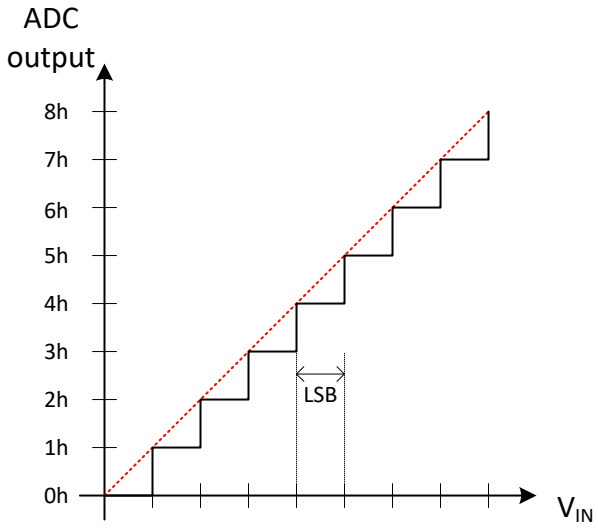

Figure 8-31. ADC Conversion

8.3.7.1 ADC Divider Ratios

The ADC voltage inputs are each divided down to the full-scale input of 1.2V. The ADC current sensing elements are not divided.

Table 8-11 shows the divider ratios for each ADC input. The application firmware selects any group of channels to be auto-sequenced in the round robin automatic readout mode.

Table 8-11. ADC Inputs

CHANNEL	SIGNAL	TYPE	DIVIDER RATIO	BUFFERED
0	I_TVSP	Current	n/a	No
1	IN	Voltage	17	No
2	LDO_3V3	Voltage	3	No
3	PA_VBUS	Voltage	21	No
4	GPIO4 | PB_VBUS	Voltage	21	No
5	I_{PA_VBUS}	Current	n/a	No
6	GPIO2 | PB_DP	Voltage	3	Yes
7	GPIO3 | PB_DM	Voltage	3	Yes
8	GPIO5 | NTC	Voltage	3	Yes
9	GPIO7 | PA_DM	Voltage	3	Yes
10	GPIO8 | PA_DP	Voltage	3	Yes
11	LDO_5V	Voltage	5	No

8.3.8 BC 1.2, Legacy and Fast Charging Modes (Px_DP, Px_DM)

BC 1.2 downstream port charger emulation is application GUI configurable. The following charging modes can be enabled or disabled:

- DCP (dedicated charging port) shorted mode
- Divider-3 mode
- 1.2V mode
- HVDCP (high voltage dedicated charging port) mode

The following table shows voltage sources, resistors and comparator hardware used in each mode. Symbol "X" represents that the corresponding module is implemented.

Application	2.7V SRC	1.2V SRC	R_{DCP_DAT}	R_{DM_DWN} (20kΩ)	V_{DAT_REF}	V_{SEL_REF}
DCP			X			
Divider-3	X					
1.2V		X	X			
HVDCP				X	X	X

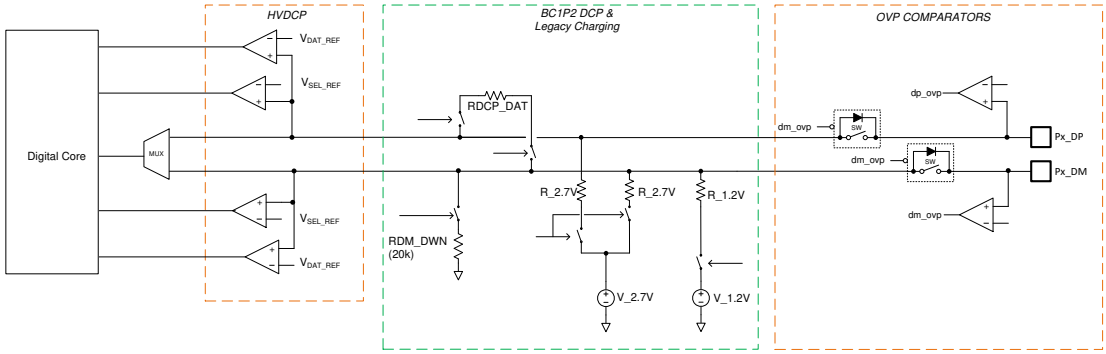

Figure 8-32. BC1P2 Functional Diagram

8.3.9 USB2.0 Low-Speed Endpoint

The USB low-speed Endpoint is a USB 2.0 low-speed (1.5Mbps) interface used to support HID class based accesses. The TPS25762-Q1 supports control of endpoint EP0. This endpoint enumerates to a USB 2.0 host

Copyright © 2026 Texas Instruments Incorporated

during firmware update mode. Firmware update mode is entered with when the device is powered on with an R_{TVSP} corresponding to TVSP Index 8.

Figure 8-33 shows the USB Endpoint physical layer. The physical layer consists of the analog transceiver, the Serial Interface Engine, and the Endpoint FIFOs and supports low-speed USB operation.

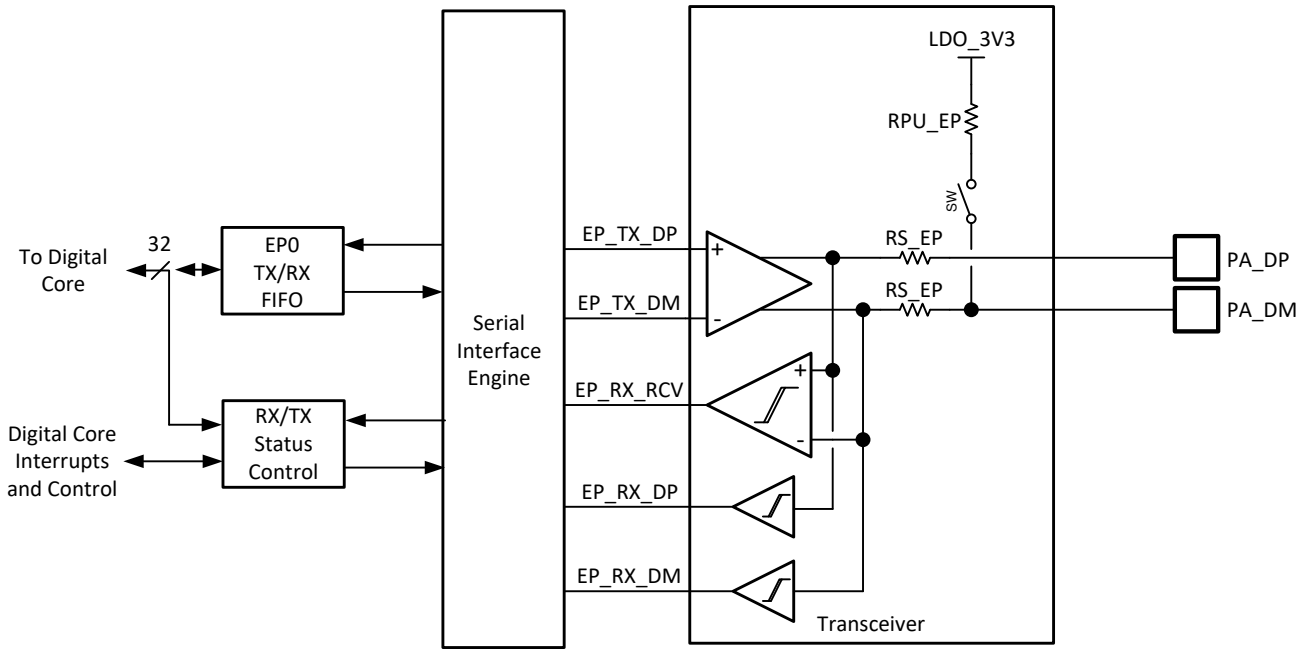

Figure 8-33. USB Endpoint PHY

The transceiver is made up of a fully differential output driver, a differential to single-ended receive buffer and two single-ended receive buffers on the D+/D– independently. The output driver drives the D+/D– through a source resistance RS_EP. RPU_EP is disconnected during transmit mode of the transceiver.

When the endpoint is in receive mode, the resistance RPU_EP is connected to the PA_DM pin. The RPU_EP resistance advertises low speed mode only.

8.3.10 Digital Interfaces

The TPS25762-Q1 contains one I^{2}C controller which used for communicating with I^{2}C target devices. Depending upon application GUI firmware configuration, an I^{2}C target and GPIOs are available.

8.3.10.1 General GPIO

The application configuration GUI manages the multi-function pins which contain General Purpose Input/Output functionality. Each buffer is configurable to be a push-pull output or open drain output. When configured as an input, the signal is a de-glitched digital input or an analog input to the ADC (only designated pins). The push-pull output is a simple CMOS totem-pole structure. Independent pull-up and pull-down enables are configured using the application GUI. When interfacing with non 3.3V I/O devices the output buffer is configurable as an open drain output and an external pull-up resistor attached to the GPIO pin.

8.3.10.2 I^{2}C Buffer

The TPS25762-Q1 features two I^{2}C interfaces that each use an I^{2}C I/O driver like the one shown in Figure 8-34. This I/O consists of an open-drain output and an input comparator with de-glitching.

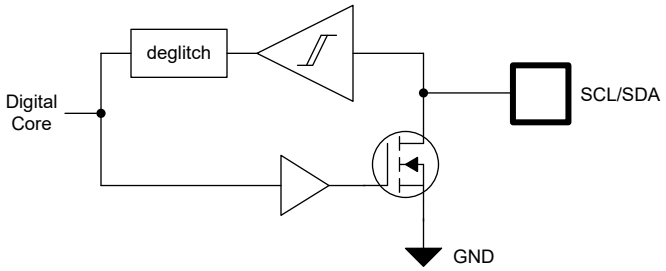

Figure 8-34. I²C Driver

8.3.11 I²C Interface

The TPS25762-Q1 has two I²C ports. I²C1 is a controller interface. I²C2 is a target interface.

I²C1 is used to read from or write to external target devices. During boot I²C1 is configured to read firmware patch and application configuration data from an external EEPROM with target address 0x50.

Depending upon application configuration, the TPS25762-Q1 exposes the target port, I²C2, using multi-function pins: GPIO2 (I²C_SCL2), GPIO3 (I²C_SDA2). When the TPS25762-Q1 is used in systems with a HUB or MCU, the I²C2 port provides connection status and telemetry information as well as transfer firmware updates from the HUB or MCU to an EEPROM connected on I²C1.

$\overline{\text{IRQ}}$ functionality depends upon firmware application configuration. $\overline{\text{IRQ}}$ is not always available on both I²C1 and I²C2 simultaneously. the IRQ is available as follows:

- Multi-function pin GPIO9: $\overline{\text{IRQ1(i)}}$, $\overline{\text{IRQ1(o)}}$, $\overline{\text{IRQ2(o)}}$
- Multi-function pin GPIO1: $\overline{\text{IRQ2(o)}}$

Where (i) = operates as an input, and (o) = operates as output.

In HUB applications where I²C control is not used, GPIO9 is configurable as a simple $\overline{\text{FAULT}}$ pin reporting port over-current conditions as required by the USB 2.0 specifications.

Table 8-12. I²C Summary

I2C Bus	Type	Typical Usage	Max Bus Frequency
I2C1c	Controller	Connect to I²C EEPROM, USB Type-C mux, I2C temperature sensor, I2C GPIO expander, or other I2C target. Use LDO_5V or LDO_3V3 pin as the pull-up voltage. Multi-controller configuration is not supported.	1MHz (Fast Mode Plus)
I2C2t	Target	Connect to I²C capable USB HUB, MCU or automotive processor.	1MHz (Fast Mode Plus)

8.3.11.1 I²C Interface Description

The I²C1 and I²C2 ports support Standard, Fast Mode, and Fast Mode Plus I²C interfaces. The bidirectional I²C bus consists of the serial clock (SCL) and serial data (SDA) lines. Both lines must be connected to a supply through a pull-up resistor. Data transfer is only initiated when the bus is not busy.

A controller sending a Start condition, a high-to-low transition on the SDA input/output, while the SCL input is high initiates I²C communication. After the Start condition, the device address byte is sent, most significant bit (MSB) first, including the data direction bit (R/W).

After receiving the valid address byte, this device responds with an acknowledge (ACK), a low on the SDA input/output during the high of the ACK-related clock pulse. On the I²C bus, only one data bit is transferred during each clock pulse. The data on the SDA line must remain stable during the high pulse of the clock period as changes in the data line at this time are interpreted as control commands (Start or Stop). The controller sends a Stop condition, a low-to-high transition on the SDA input/output while the SCL input is high.

Any number of data bytes are transferred from the transmitter to receiver between the Start and the Stop conditions. Each byte of eight bits is followed by one ACK bit. The transmitter must release the SDA line before the receiver sends an ACK bit. The device that acknowledges must pull down the SDA line during the ACK clock pulse, so that the SDA line is stable low during the high pulse of the ACK-related clock period. When a

Copyright © 2026 Texas Instruments Incorporated

target receiver is addressed, it must generate an ACK after each byte is received. Similarly, the controller must generate an ACK after each byte that it receives from the target transmitter. Setup and hold times must be met to enable proper operation.

A controller receiver signals an end of data to the target transmitter by not generating an acknowledge (NACK) after the last byte has been clocked out of the target. This condition is done by the controller receiver holding the SDA line high. In this event, the target transmitter must release the data line to enable the controller to generate a Stop condition.

Figure 8-35 shows the start and stop conditions of the transfer. Figure 8-36 shows the SDA and SCL signals for transferring a bit. Figure 8-37 shows a data transfer sequence with the ACK or NACK at the last clock pulse.

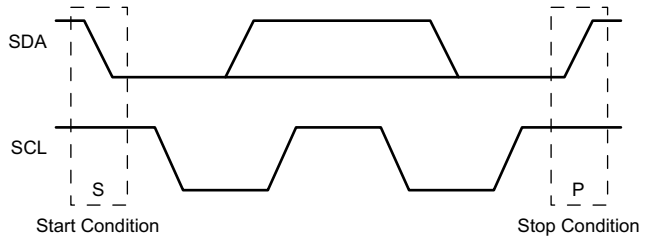

Figure 8-35. I²C Definition of Start and Stop Conditions

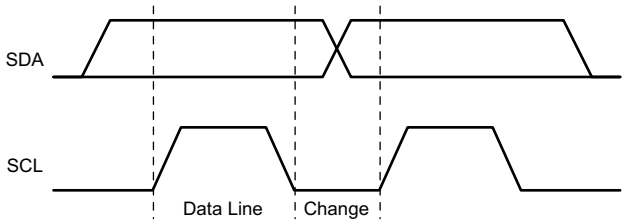

Figure 8-36. I²C Bit Transfer

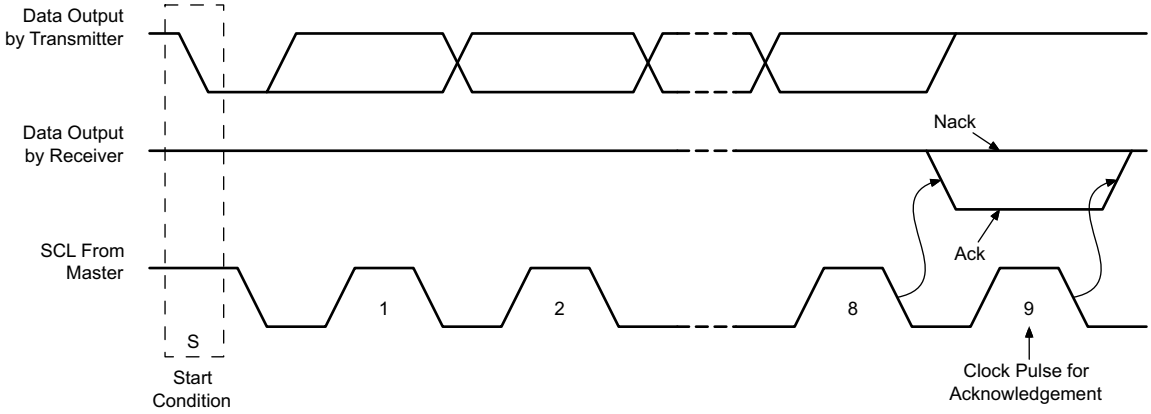

Figure 8-37. I²C Acknowledgment

8.3.11.2 I²C Clock Stretching

Clock stretching for I²C2. The target I²C port holds the clock line (SCL) low after receiving (or sending) a byte, indicating that it is not yet ready to process more data. The controller communicating with the target must not finish the transmission of the current bit and must wait until the clock line actually goes high. When the target is clock stretching, the clock line remains low.

The controller must wait until it observes the clock line transitioning high plus an additional minimum time (4 µs for standard 100kbps I²C) before pulling the clock low again.

Any clock pulse is stretched but typically it is the interval before or after the acknowledgment bit.

8.3.11.3 I²C Address Setting

A HUB, MCU, or automotive processor host uses I²C_SCL2/I²C_SDA2 for loading firmware patches or general status communication. Once the boot process is complete, each port is assigned a unique target address as determined by the TVSP pin. The target addresses used by each port on the I2C2 bus are determined from the application configuration.

8.3.11.4 Unique Address Interface

The Unique Address Interface allows for complex interaction between an I²C controller and a single TPS25762-Q1. The I²C target sub-address is used to receive or respond to Host Interface protocol commands. Figure 8-38 and Figure 8-39 show the write and read protocol for the I²C target interface, and a key is included in Figure 8-40 to explain the terminology used. The key to the protocol diagrams is in the SMBus Specification and is repeated here in part.

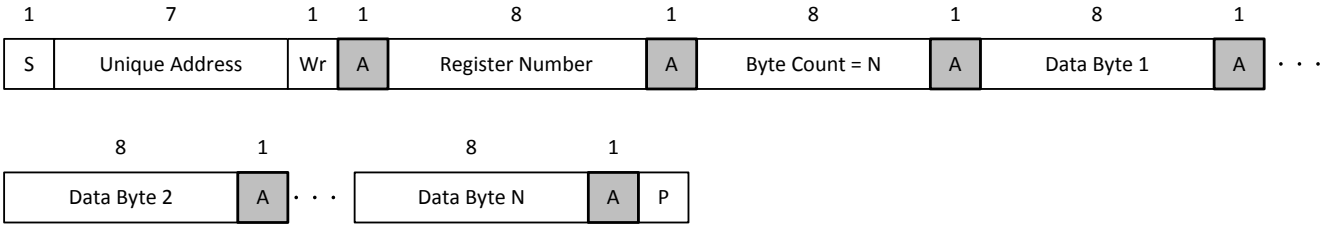

Figure 8-38. I²C Unique Address Write Register Protocol

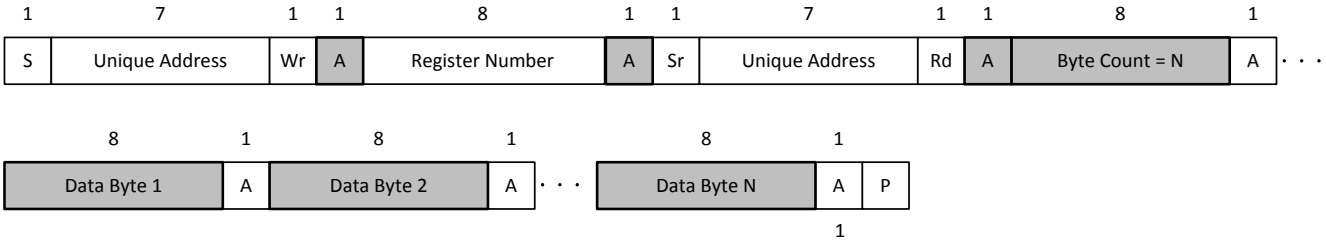

Figure 8-39. I²C Unique Address Read Register Protocol

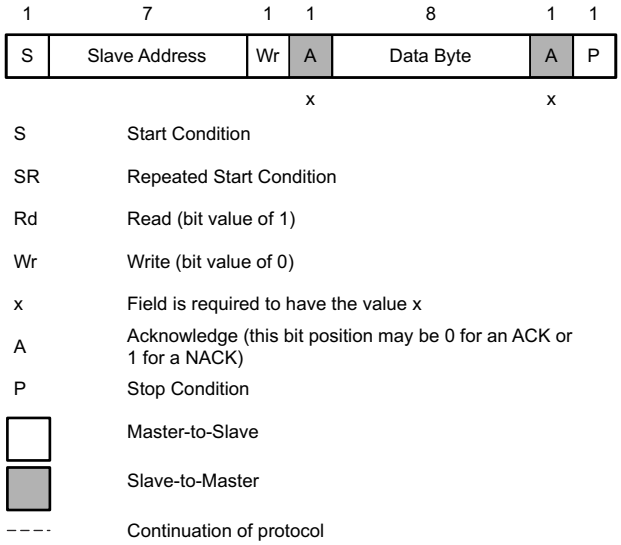

Figure 8-40. I²C Read/Write Protocol Key

8.3.11.5 I²C Pullup Resistor Calculation

Typical value for R_P, the I²C pullup resistor is given by:

Copyright © 2026 Texas Instruments Incorporated

$R_P = t_r / (0.8473 \times C_b)$

Refer to Table 8-13 for values of t_r, C_b and V_{OL}.

Table 8-13. Parametrics from I2C Specifications

Parameter		Standard Mode (Max)	Fast Mode (Max)	Fast Mode Plus (Max)	Unit
f_{SCL}	SCL clock frequency	100	400	1000	kHz
t_r	Rise time of both SDA and SCL signals	1000	300	120	ns
C_b	Capacitive load for each bus line	400	400	550	pF
V_{OL}	Low-level output voltage (at 3mA current sink, V_{DD} > 2V)	0.4	0.4	0.4	V
	Low-level output voltage (at 2mA current sink, V_{DD} ≤ 2 V)	–	0.2 × V_{DD}	0.2 × V_{DD}	V

For additional background regarding I2C pullup resistor calculations, please refer to application report, *I²C Bus Pullup Resistor Calculation*.

8.3.12 Digital Core

Figure 8-41 shows a simplified block diagram of the digital core.

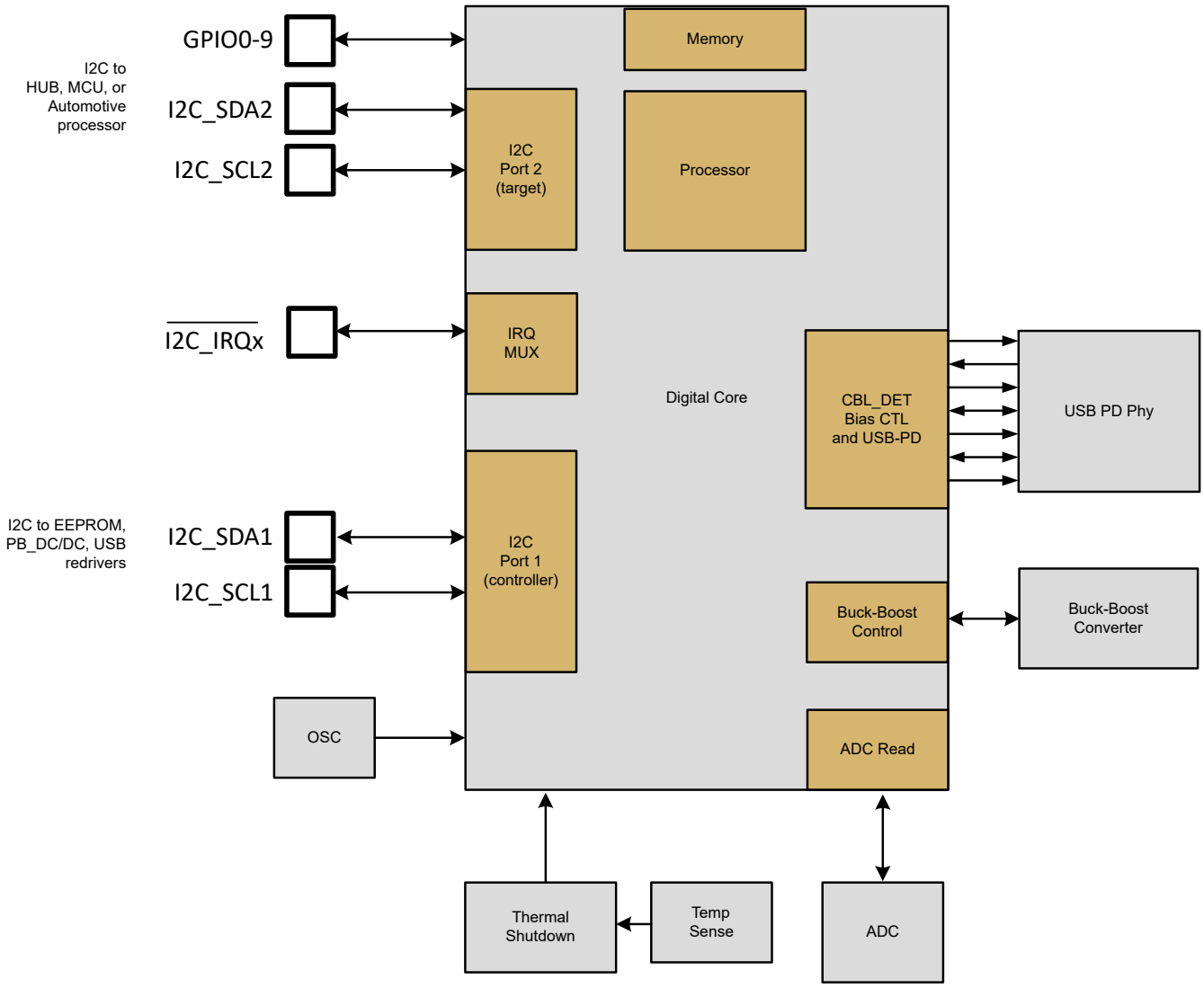

Figure 8-41. Digital Core Simplified Block Diagram

8.3.12.1 Device Memory

The digital core contains a combination of ROM, SRAM, and OTP. ROM and SRAM function as the storage and operational space for application firmware. OTP contains boot configuration settings. There are 27 kBytes of SRAM, 160 kBytes of ROM, and 512 bytes of OTP.

8.3.12.2 Core Microprocessor

The digital core is an ARM M0+ clocked at 24MHz with zero wait states.

8.3.13 NTC Input

The NTC pin is used by the device firmware to monitor system temperature. Rising or falling voltages on the NTC pin indicate increasing or decreasing system temperatures, respectively. To achieve a positive temperature slope on the TPS25762-Q1 NTC pin, thermistors are connected to LDO_3V3 as shown in Figure 8-42.

Copyright © 2026 Texas Instruments Incorporated

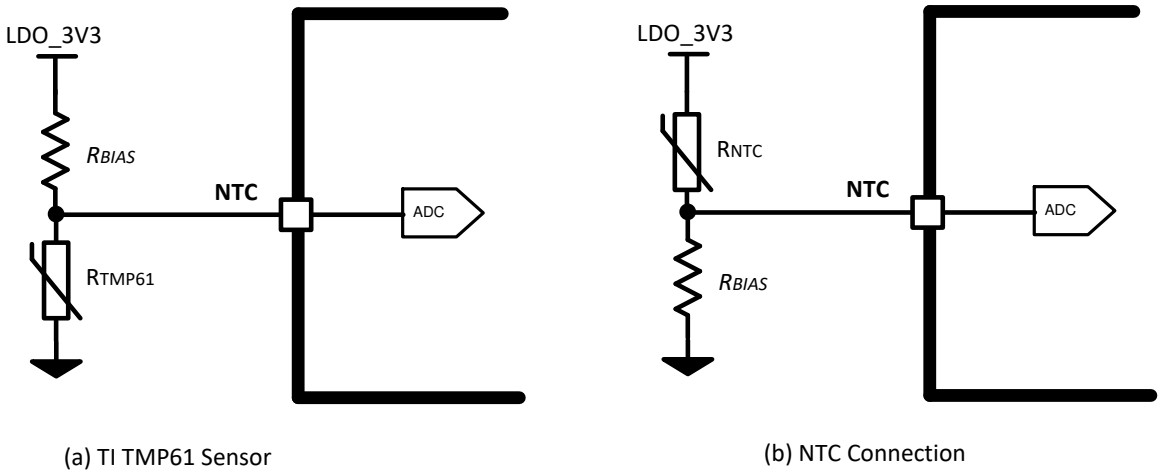

Figure 8-42. Thermistor Connections (a) PTC, (b) NTC

See Figure 8-43 and Figure 8-44. System power management responses for different V_{NTC} voltages are defined using the application configuration GUI.

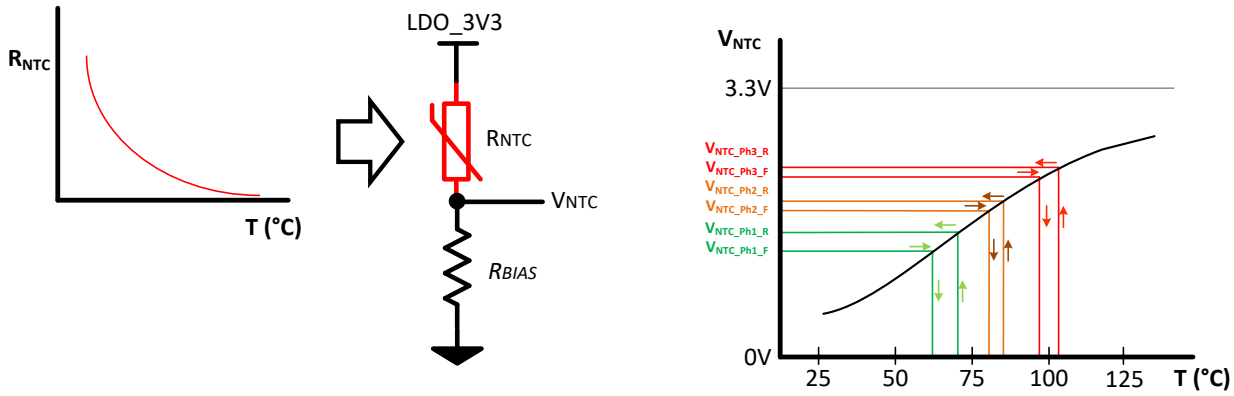

Figure 8-43. NTC Response Curve

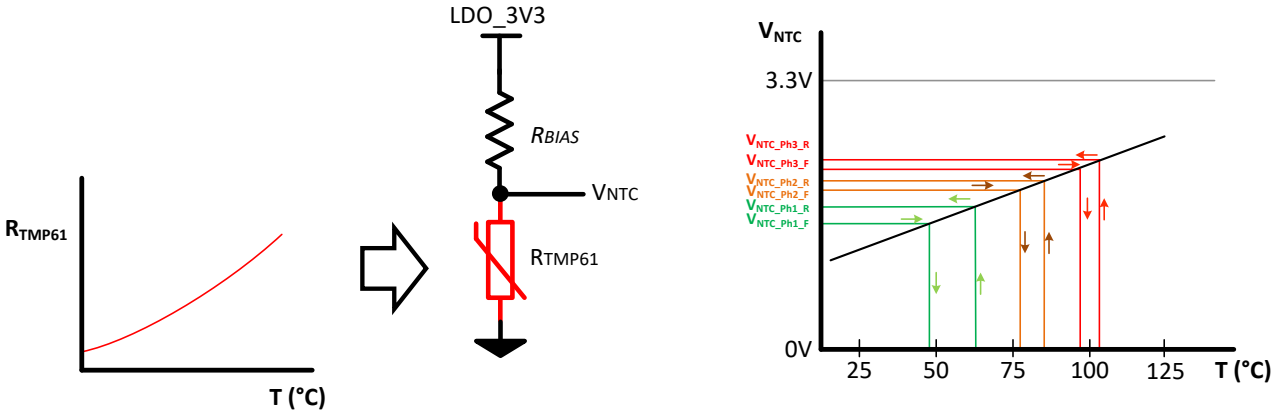

Figure 8-44. TMP61 PTC Response Curve

Note

For optimum accuracy, use the V_{LDO_3V3} specifications in *Electrical Characteristics* tables when performing resistor divider calculations.

8.3.14 Thermal Sensors and Thermal Shutdown

There are five internal thermal sensors in the TPS25762-Q1 devices:

- T_{SD_BB}. Two diode OR'ed thermal sensors to monitor buck-boost power FETs. Disables buck-boost regulator when asserted. USB-PD engine enters error recovery.
- $T_{SD_PA_VCONN}$. One thermal sensor located in the PA_VCONN path. Opens PA_VCONN FET during over-temperature event. USB-PD engine enters error recovery.
-
- $T_{SD_PA_VBUS_DISCH}$. One thermal sensor located in the PA_VBUS discharge path. Opens PA_VBUS discharge FET during over-temperature. Closes PA_VBUS discharge FET when temperature decreases below falling hysteresis. (T_{SD_HYS}) if PA_VBUS is above discharge threshold set by firmware during decreasing VBUS transition.
- T_{SD_LDO5V}. One thermal sensor located in the LDO_5V regulator. Operates as master thermal shutdown. Disables device completely during over-temperature events causing M0 to hard reset. Allows device operation when temperature decreases below falling hysteresis (T_{SD_HYS}).

8.4 Device Functional Modes

Shutdown Mode

The EN/UVLO pin provides electrical ON and OFF control for the TPS25762-Q1. When $V_{EN/UVLO}$ is below 1.15V (typ), the device is in shutdown mode in which the Cortex M0 is disabled and only minimal analog functions are operating. Refer to VIN UVLO and Enable/UVLO section for the detailed description of the EN/UVLO pin functionality.

Active Mode

The TPS25762-Q1 enters active mode when $V_{EN/UVLO}$ is above its rising threshold, $V_{EN(OPER)}$, and the supply voltage on the IN pin is above the V_{IN} undervoltage lockout threshold, $V_{IN(UVLO_R)}$. In active mode, the internal analog circuits are fully operational with the M0 enabled and executing firmware from ROM.

At the onset of active mode, firmware boot code attempts to measure the resistance on the TVSP pin and decode a TVSP Index value. Upon successful configuration and firmware patch load, the device is ready to begin operation per configuration settings stored on the external EEPROM. If the configuration and patch data do not load successfully due to communications error the device continues to operate with only Port A enabled with standard Type-C functionality. Index value 8 is reserved for use when updating device configuration and firmware patch information through the TPS25762-Q1 GUI and Port A connection. Once device boot is complete, device firmware controls and manages USB connections in accordance with loaded application configuration settings.

Copyright © 2026 Texas Instruments Incorporated

9 Application and Implementation

Note

Information in the following applications sections is not part of the TI component specification, and TI does not warrant its accuracy or completeness. TI's customers are responsible for determining suitability of components for their purposes, as well as validating and testing their design implementation to confirm system functionality.

9.1 Application Information

The TPS25762-Q1 application configuration GUI provides default application settings.

The most common implementations are single port USB PD charger and single port USB PD with USB HUB. Refer to the respective evaluation board content found in the device product folder for the TPS25762-Q1 for detailed design information. Consult the TPS257XX-Q1-GUI Configuration Guide and application GUI TPS257XX-Q1-GUI for system configuration options.

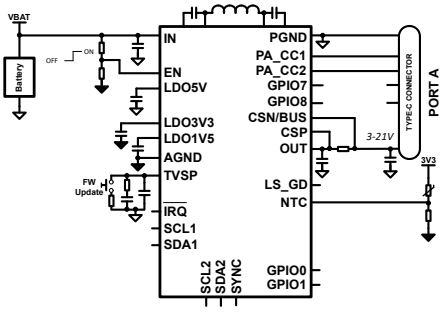

Figure 9-1. Simplified Single USB PD Charger

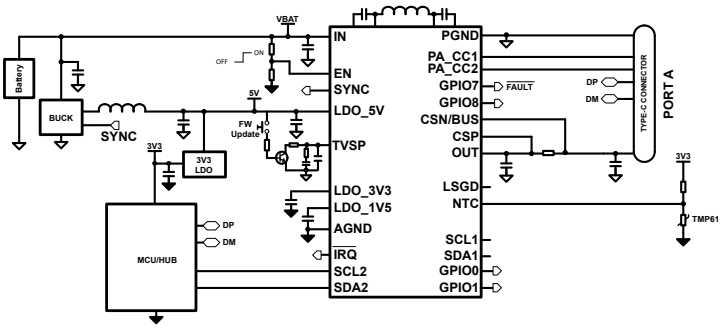

Figure 9-2. Simplified Single USB PD with MCU/HUB

Typical Application describes a detailed step-by-step design procedure for a typical charger application circuit.

9.2 Typical Application

Figure 9-3 Shows a typical example of a 65 W output automotive USB Type-C Power Delivery port. The device is internally compensated and optimized for components shown in Table 9-1.

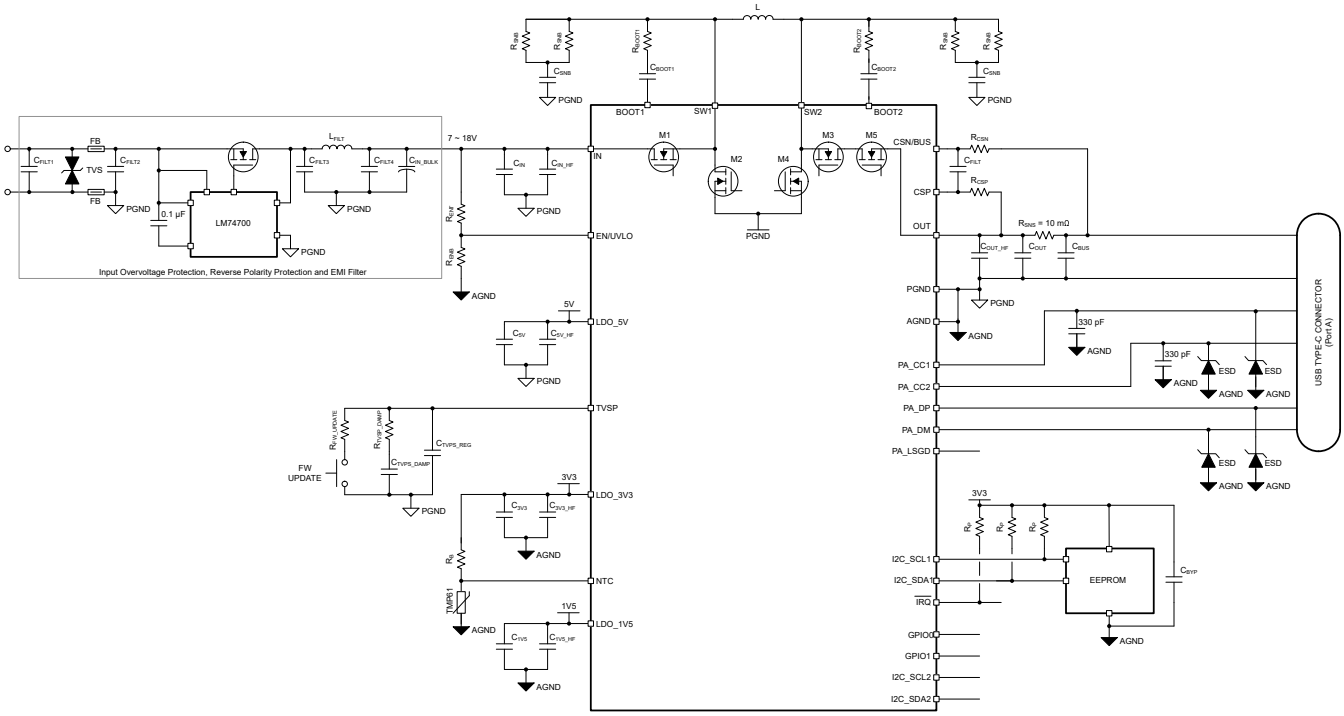

Figure 9-3. TPS25762-Q1 Application Schematic

Table 9-1. Recommended Inductors, Input and Output Capacitance

f_{SW}	C_{IN} + C_{HF}	L	MIN of C_{OUT} + C_{BUS}	C_{OUT} + C_{HF}	C_{BUS}
300	22µF + 2 × 0.1µF	4.7µH	160µF	30µF + 2 × 0.1µF	130µF + 2 × 0.1F
400	22µF + 2 ×0.1µF	4.7µH	120µF	30µF + 2 × 0.1µF	90µF + 2 × 0.1µF
400	22µF + 2 × 0.1µF	3.3µH	140µF	30µF + 2 × 0.1µF	110µF + 2 × 0.1µF
450	22µF + 2 × 0.1µF	3.3µH	140µF	30µF + 2 × 0.1µF	110µF + 2 × 0.1µF

- 50V rated capacitors recommended.

Copyright © 2026 Texas Instruments Incorporated

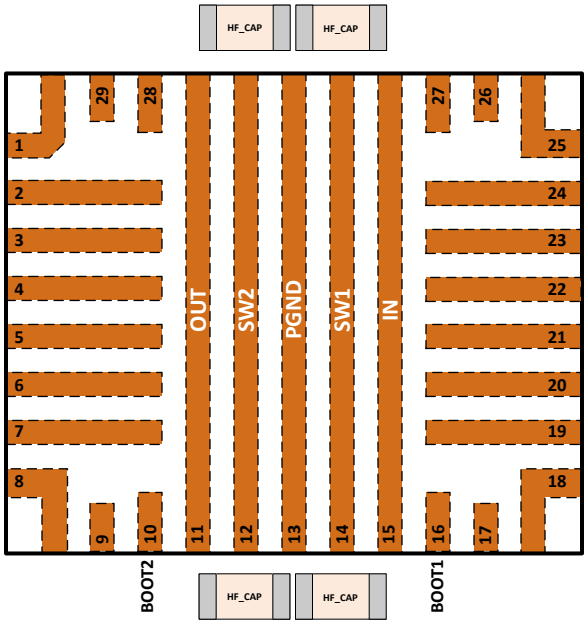

Inductor

Figure 9-4. Input and Output C_{HF} Capacitor Placement

To provide adequate decoupling of V_{IN} and V_{OUT} and robust device operation, use two 0.1µF, C_{HF} capacitors per node, placed on opposite sides of the IC package, as close to the pins as possible. Typically, the inductor is placed on the same PCB layer (top or bottom) as the IC package. The C_{HF} capacitors on the inductor end of the IC package are be placed on the opposite side of the PCB (bottom or top) using vias to minimize trace length from the inductor side IN and OUT pins to the physical location of these capacitors.

Table 9-2. Recommended SWx Snubber and Current Sense Filter Components

SW1 [1]		SW2 [2]		CSP and CSN Filter [3]		
R_{SNB} (0.25W)	C_{SNB} (50V)	R_{SNB} (0.25W)	C_{SNB} (50V)	R_{CSP} (0.1W)	R_{CSN} (0.1W)	C_{FLT} (50V)
2.2Ω || 2.2Ω	1nF	2.2Ω || 2.2Ω	3.3nF	10Ω	0Ω	0.22µF

1. As needed for EMI mitigation - user optional. (Use of this snubber also aids in supporting devices with high initial inrush load current that exceeds the power delivery specification.)
2. **Required** for robust device operation.
3. **Required** to meet USB-IF current regulation requirements.

9.2.1 Design Requirements

For this example, Table 9-3 are used as the target parameters.

Table 9-3. Design Inputs

DESIGN PARAMETER	EXAMPLE VALUE
Input Voltage Range	6.8V to 18V (transients to 36V)
UVLO Turn on Voltage	6.5V
USB PD Power	65W
USB PD V_{BUS} Voltages	5V, 9V, 15V, 20V and 3.3 to 21V (PPS)
Output	3.3 - 21V
Load Current	PDO: 5V, 3A; 9V, 3A; 15V, 3A, 20V, 3.25A APDO: 3.3 - 21V, 3A
Switching Frequency	400kHz
V_{CONN}	0.1W

Copyright © 2026 Texas Instruments Incorporated

Table 9-3. Design Inputs (continued)

DESIGN PARAMETER	EXAMPLE VALUE
Automotive Module Maximum Current	15A

9.2.2 Detailed Design Procedure

9.2.2.1 Application GUI Selections

Use the application GUI to select the desired operating conditions. Once complete, save the settings to the programming PC, flash the firmware to EEPROM, and power cycle device. Once complete the TPS25762-Q1 is ready for operation.

Table 9-4. Application GUI Selections

PARAMETER	GUI SELECTION
BUCK-BOOST AND USB INPUTS	
Port A V_{BUS} Power	65W
Port A PDOs and APDOs	PDO: 5V, 3A; 9V, 3A; 15V, 3A; 20V, 3.25A APDO: 3.3 - 21V, 3A
Port A V_{CONN} Power	0.1W
f_{SW} Switching Frequency	400kHz
L Inductor	4.7 µH
Automotive Module Maximum Current	15A
LOW BATTERY INPUTS	
Engine ON voltage	12.5V
Engine OFF voltage	11V
Run timer after engine off	600 seconds
THERMAL MANAGEMENT INPUTS	
V_{NTC_PHASE1}	1.65V
NTC_PHASE1 Power as Percentage of MAX	50%
V_{NTC_PHASE2}	2.1V
NTC_PHASE2 Power as Percentage of MAX	30%
V_{NTC_PHASE3}	2.4V
NTC_PHASE3 Power as Percentage of MAX	0% (disable PA_VBUS)

9.2.2.2 EEPROM Selection

An EEPROM is required to store user application configuration data as any firmware patch updates released by Texas Instruments during the life of the product.

Basic requirements:

- 32kB (256kb)
- 7 Bit I2C address (0x50)
- Organization: 32kb x 8 (totals 256kb)
- Active firmware image is stored in one 16kb x 8 partition. The previous firmware image is retained in the other 16kb x 8 partition for reliability.
- Page size/buffer must be 64b

Table 9-5. Suggested EEPROMs

Manufacturer	Part Number
On Semi	CAV24C256
Microchip	24LC256
ST Micro	M24256
Rohm	BRA24T512=3AM

Copyright © 2026 Texas Instruments Incorporated

9.2.2.3 EN/UVLO

The TPS25762-Q1 has a fixed $V_{IN(UVLO)}$ with rising and falling thresholds between 5 and 5.5V, refer to Buck-Boost Regulator for exact values. The falling threshold, $V_{IN(UVLO_F)}$, disables the device when the battery voltage is too low for continued operation. To establish a turn on voltage higher than $V_{IN(UVLO_R)}$, connect a resistor divider from the IN supply voltage to the EN/UVLO pin. When $V_{EN/UVLO} > V_{EN(OPER)}$, nominally 1.25 V, the device exits low power shutdown and begins to startup.

In this example a V_{IN} turn on voltage of approximately 6.5V is required. Use the equations and examples below to determine the required resistor values.

- Choose standard value R_{ENB} = 22kΩ.
- Calculate R_{ENT}

$$R_{ENT} = \left(\frac{V_{ON}}{V_{EN(OPER)}} - 1\right) \times R_{ENB} \tag{3}$$

$$R_{ENT} = \left(\frac{6.5\ V}{1.25\ V} - 1\right) \times 22\ k\Omega = 92.4\ k\Omega \tag{4}$$

- Select a standard value of 91kΩ.
- Using 22kΩ and 91kΩ. Rearranging Equation 3 results in

$$V_{ON} = \left(\frac{R_{ENT}}{R_{ENB}} + 1\right) \times V_{EN(OPER)} \tag{5}$$

$$V_{ON} = \left(\frac{91\ k\Omega}{22\ k\Omega} + 1\right) \times 1.25\ V = 6.42\ V \tag{6}$$

- Calculate V_{OFF}

$$V_{OFF} = \left(1 - \frac{V_{EN(HYS)}}{V_{EN(OPER)}}\right) \times V_{ON} \tag{7}$$

$$V_{OFF} = \left(1 - \frac{0.1\ V}{1.25\ V}\right) \times 6.42\ V = 5.91\ V \tag{8}$$

- Lastly, confirm the selected resistors do not trigger the EN/UVLO pin MAX clamp voltage. Assuming 36V as a maximum V_{IN} transient.

$$V_{EN/UVLO(MAX)} = \left(\frac{V_{IN(MAX)} \times R_{ENB}}{R_{ENT} + R_{ENB}}\right) \tag{9}$$

$$V_{EN/UVLO(MAX)} = \left(\frac{36\ V \times 22\ k\Omega}{22\ k\Omega + 91\ k\Omega}\right) = 7\ V \tag{10}$$

- The result, 7V, is less than the EN/UVLO pin maximum clamp voltage.

9.2.2.4 Sense Resistor, R_{SNS}, R_{CSP}, R_{CSN} and C_{FILT}

The TPS25762-Q1 requires a 10mΩ resistance between the CSP and CSN/BUS pins. For accurate current limit regulation, ±1% precision or better is required. For a DC output current of 3.25A, the power dissipation in the resistor is

I^2R, or $(3.25A)^2 \times 0.01\Omega = 0.106$ W.

A power resistor with 0.33W rating, ± 1% tolerance and 2010 case is chosen. *Check the manufacturers power derating curves when selecting the component. Most derate maximum power above 70°C.*

An RC filter network is required on the CSP and CSN/BUS pins for proper USB PD PPS current limit accuracy. A filter network with R_{CSP} = 10Ω, R_{CSN} = 0Ω, and filter capacitor, C_{FILT} = 0.22µF is recommended. Suggested RC filter component ratings are shown in Table 9-2. R_{CSN} must be zero ohm to avoid interfering with the V_{BUS} discharge functionality.

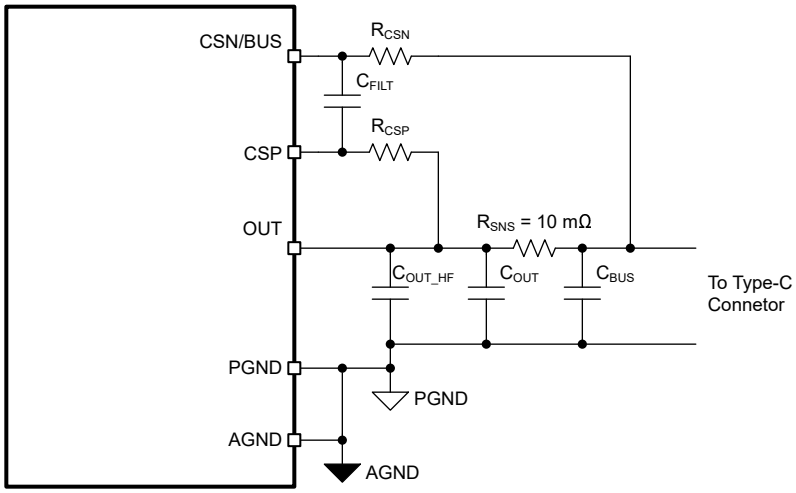

Figure 9-5. Current Sense Amplifier: RC Filter Components

9.2.2.5 Inductor Currents

Table 9-1 lists recommended inductor values based on desired switching frequency, f_{SW}. The following equations were used to derive the values in the *Buck Calculation* and *Boost Calculation* results tables below.

$$D_{BUCK} = \frac{V_{OUT}}{V_{IN(MAX)} \times \eta} \tag{11}$$

$$D_{BOOST} = 1 - \frac{V_{IN(MIN)} \times \eta}{V_{OUT}} \tag{12}$$

where

- $V_{IN(MAX)}$ = maximum input voltage
- $V_{IN(MIN)}$ = minimum input voltage
- V_{OUT} = output voltage
- D_{BUCK} = minimum duty cycle for buck mode
- D_{BOOST} = maximum duty cycle for boost mode
- η = estimated efficiency calculated at V_{IN}, V_{OUT}, and I_{OUT}

Buck Mode

$$I_{SW_BUCK(MAX)} = \frac{\Delta I_{L_BUCK(MAX)}}{2} + I_{OUT} \tag{13}$$

$$\Delta I_{L_BUCK(MAX)} = \frac{(V_{IN(MAX)} - V_{OUT(MIN)}) \times D_{BUCK}}{f_{SW} \times L} \tag{14}$$

where

- $V_{IN(MAX)}$ = maximum input voltage
- $V_{OUT(MIN)}$ = minimum output voltage
- I_{OUT} = maximum DC output current
- $\Delta I_{L\text{-}BUCK(MAX)}$ = maximum ripple current through the inductor when in buck operation

Copyright © 2026 Texas Instruments Incorporated

- $I_{SW_BUCK(MAX)}$ = maximum switch current when in buck operation
- D_{BUCK} = minimum duty cycle for buck operation
- f_{SW} = switching frequency of the converter
- L = selected inductor value

$$I_{MAXOUT(BUCK)} = I_{PEAK(BUCK)} - \frac{\Delta I_{L_BUCK(MAX)}}{2} \tag{15}$$

where

- $I_{MAXOUT(BUCK)}$ = maximum deliverable current through inductor by the converter
- $I_{PEAK(BUCK)}$ = buck switch peak current limit from *Electrical Characteristics* table
- $\Delta I_{L_BUCK(MAX)}$ = Ripple current through the inductor calculated in Equation 14.

Boost Mode

$$I_{SW_BOOST(MAX)} = \frac{\Delta I_{L_BOOST(MAX)}}{2} + \frac{I_{OUT}}{1 - D_{BOOST}} \tag{16}$$

$$\Delta I_{L_BOOST(MAX)} = \frac{V_{IN(MIN)} \times D_{BOOST}}{f_{SW} \times L} \tag{17}$$

where

- $V_{IN(MIN)}$ = minimum input voltage
- $V_{OUT(MAX)}$ = desired output voltage
- I_{OUT} = desired output current
- $\Delta I_{L_BOOST(MAX)}$ = maximum ripple current through the inductor in boost operation
- $I_{SW_BOOST(MAX)}$ = maximum switch current in boost operation
- D_{BOOST} = maximum duty cycle for boost operation
- f_{SW}= switching frequency of the converter
- L = selected inductor value

$$I_{MAXOUT(BOOST)} = \left(I_{PEAK(BOOST)} - \frac{\Delta I_{L_BOOST(MAX)}}{2}\right) \times (1 - D_{BOOST}) \tag{18}$$

where

- $I_{MAXOUT(BOOST)}$ = maximum deliverable current through inductor by the converter
- D_{BOOST} = maximum duty cycle for boost mode
- $I_{PEAK(BOOST)}$ = boost switch peak current limit from *Electrical Characteristics* table
- $\Delta I_{L_MAX(BOOST)}$ = Ripple current through the inductor calculated in Equation 17.

Buck Operation

Table 9-6 provides the tabulated $\Delta I_{L_BUCK(MAX)}$ and $I_{SW_BUCK(MAX)}$ for the conditions below.

- η = 0.95
- $V_{IN(MAX)}$ = 18 V
- $V_{OUT(MIN)}$ = 3.3 V
- $D_{BUCK(MIN)}$ = 0.193

Table 9-6. Buck Calculation Results (L = 4.7 µH), I_{BUS} = 3A

f_{SW} (kHz)	I_{OUT} (A)	$\Delta I_{L_BUCK(MAX)}$ (A)	$I_{SW_BUCK(MAX)}$ (A)
300	3.00	2.87	4.44
400	3.00	2.15	4.08
450	3.00	1.91	3.96
300	3.00	2.01	4.01
400	3.00	1.51	3.76
450	3.00	1.34	3.67

Boost Operation

Table 9-6 provides the tabulated $\Delta I_{L_BOOST(MAX)}$, $I_{SW_BOOST(MAX)}$, suggested GUI $I_{PEAK(BOOST)}$ (MIN) settings for the maximum output power conditions shown below.

If $I_{SW_BOOST(MAX)} > I_{PEAK(BOOST)}$ (MIN) → V_{BUS} dropout likely.

If $I_{SW_BOOST(MAX)} < I_{PEAK(BOOST)}$ (MIN) → V_{BUS} regulates normally.

- $\eta = 0.95$
- $V_{IN(MIN)}$ = 5.5V to 9V
- $V_{OUT(MAX)}$ = 21V
- I_{OUT} = 3A

To be noted, the calculation here uses 21V 3A instead of 20V 3.25A because 21V 3A has bigger inductor peak current.

Table 9-7. Boost Calculation Results (L = 4.7 µH), I_{BUS} = 3A

f_{SW} (kHz)	$V_{IN(MIN)}$ (V)	$D_{BOOST(MAX)}$	$\Delta I_{L_BOOST(MAX)}$ (A)	$I_{SW_BOOST(MAX)}$ (A)	GUI [1] $I_{PEAK(BOOST)}$ (A)
300	5.5	0.751	2.93	13.51	12.3
	6	0.729	3.10	12.62	12.3
	6.5	0.706	3.25	11.83	12.3
	7	0.683	3.39	11.16	12.3
	7.5	0.661	3.52	10.61	10.8
	8	0.638	3.62	10.10	10.8
	8.5	0.615	3.71	9.65	10.8
	9	0.593	3.79	9.27	9.3
400	5.5	0.751	2.20	13.15	12.3
	6	0.729	2.33	12.24	12.3
	6.5	0.706	2.44	11.42	12.3
	7	0.683	2.54	10.73	10.8
	7.5	0.661	2.64	10.17	10.8
	8	0.638	2.71	9.64	10.8
	8.5	0.615	2.78	9.18	9.3
	9	0.593	2.84	8.79	9.3

Copyright © 2026 Texas Instruments Incorporated

Table 9-7. Boost Calculation Results (L = 4.7 µH), I_{BUS} = 3A (continued)

f_{SW} (kHz)	$V_{IN(MIN)}$ (V)	$D_{BOOST(MAX)}$	$\Delta I_{L_BOOST(MAX)}$ (A)	$I_{SW_BOOST(MAX)}$ (A)	GUI [(1)] $I_{PEAK(BOOST)}$ (A)
450	5.5	0.751	1.95	13.02	12.3
	6	0.729	2.07	12.11	12.3
	6.5	0.706	2.17	11.29	12.3
	7	0.683	2.26	10.59	10.8
	7.5	0.661	2.34	10.02	10.8
	8	0.638	2.41	9.49	9.3
	8.5	0.615	2.47	9.03	9.3
	9	0.593	2.51	8.63	9.3

(1) MIN value of boost peak ILIM shown. See electrical characteristics table for MIN, TYP, MAX values.

9.2.2.6 Output Capacitor

In the boost mode, the output capacitor conducts high ripple current. The output capacitor RMS ripple current is given by Equation 19 where the minimum V_{IN} corresponds to the maximum capacitor current.

$$I_{COUT(RMS)} = I_{OUT} \times \sqrt{\frac{V_{OUT}}{V_{IN}} - 1} \tag{19}$$

In this example the maximum output ripple RMS current is $I_{COUT(RMS)}$ = 3.18A. A 5mΩ output capacitor ESR causes an output ripple voltage of 34mV as given by:

$$\Delta V_{RIPPLE(ESR)} = \frac{I_{OUT} \times V_{OUT}}{V_{IN(MIN)}} \times ESR \tag{20}$$

A 140 µF output capacitor (C_{OUT} + C_{BUS}) causes a capacitive ripple voltage of 26mV as given by:

$$\Delta V_{RIPPLE(COUT)} = \frac{I_{OUT} \times \left(1 - \frac{V_{IN(MIN)}}{V_{OUT}}\right)}{C_{OUT} \times F_{sw}} \tag{21}$$

Typically a combination of ceramic and bulk capacitors is needed to provide low ESR and high ripple current capacity. The complete schematic in *Typical Application* section provides C_{OUT} and C_{BUS} recommendations suitable for most applications.

9.2.2.7 Input Capacitor

In the buck mode, the input capacitor supplies high ripple current. The RMS current in the input capacitor is given by:

$$I_{CIN(RMS)} = I_{OUT} \sqrt{D \times (1 - D)} \tag{22}$$

The maximum RMS current occurs at D = 0.5, which gives $I_{CIN(RMS)}$ = I_{OUT}/2 = 1.5A. Use a combination of ceramic and bulk capacitors to provide a short path for high di/dt current and to reduce the output voltage ripple. Table 9-1 in the *Typical Application* section is a good starting point for C_{IN} selection.

9.2.3 Application Curves

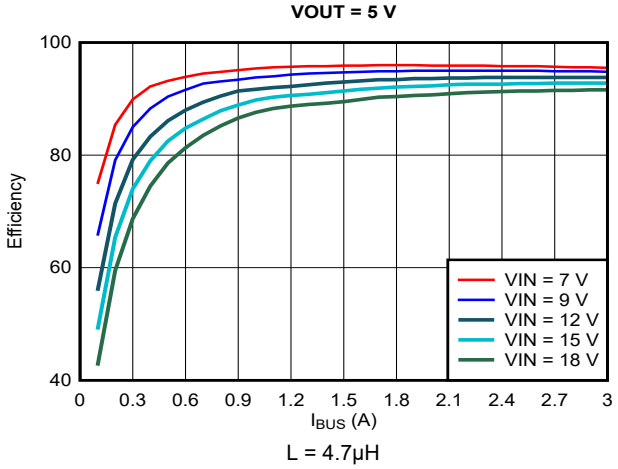

Figure 9-6. Efficiency vs Output Current (I_{OUT}), V_{OUT} = 5V

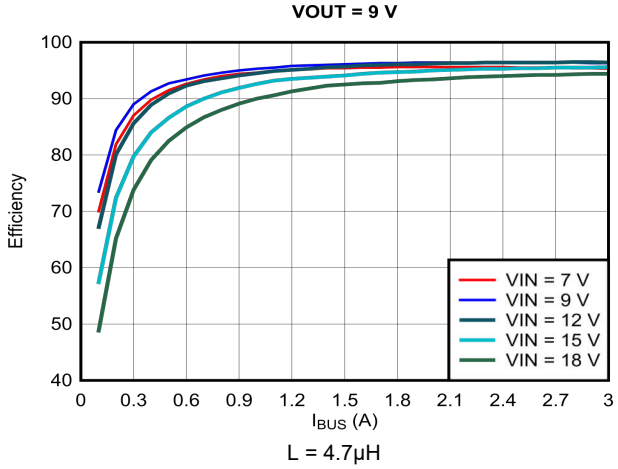

Figure 9-7. Efficiency vs Output Current (I_{OUT}), V_{OUT} = 9V

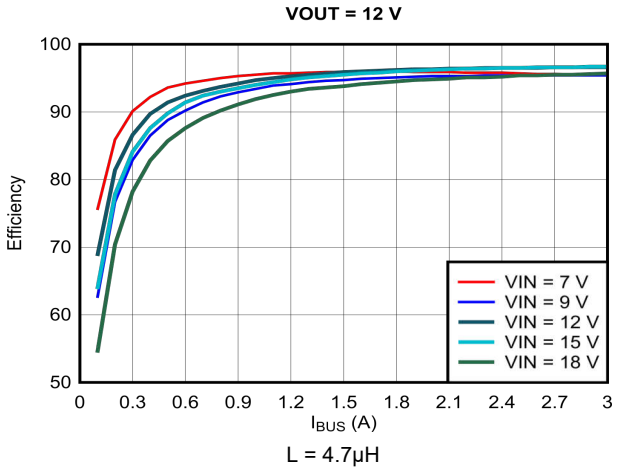

Figure 9-8. Efficiency vs Output Current (I_{OUT}), V_{OUT} = 12V

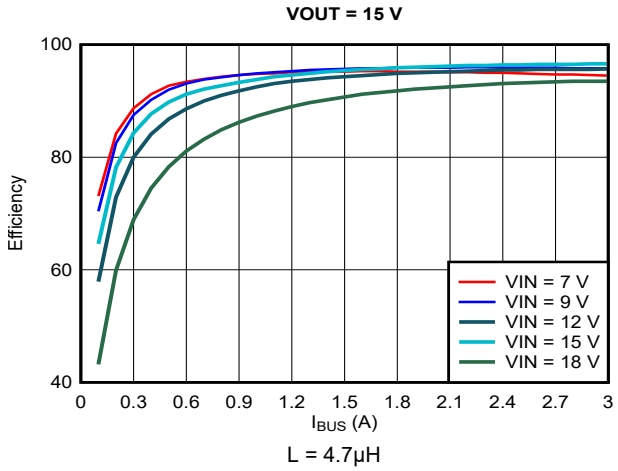

Figure 9-9. Efficiency vs Output Current (I_{OUT}), V_{OUT} = 15V

Copyright © 2026 Texas Instruments Incorporated

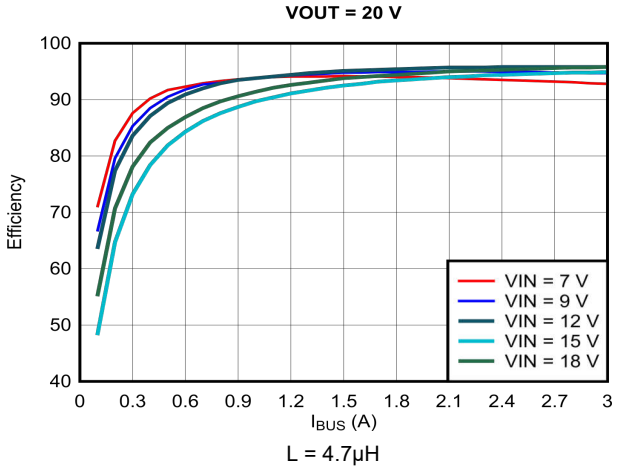

Figure 9-10. Efficiency vs Output Current (I_{OUT}), V_{OUT} = 20V

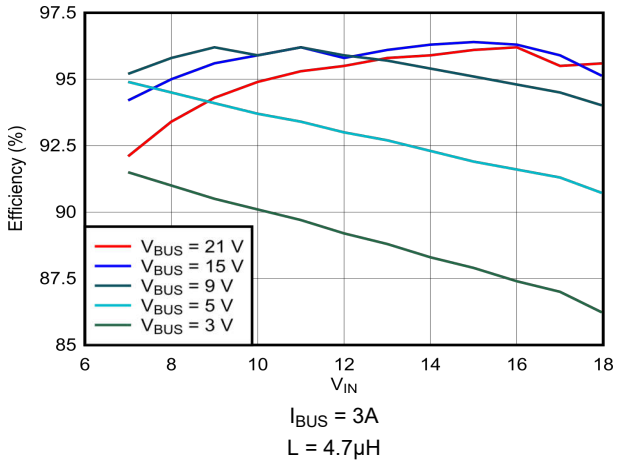

Figure 9-11. Efficiency vs Input Voltage

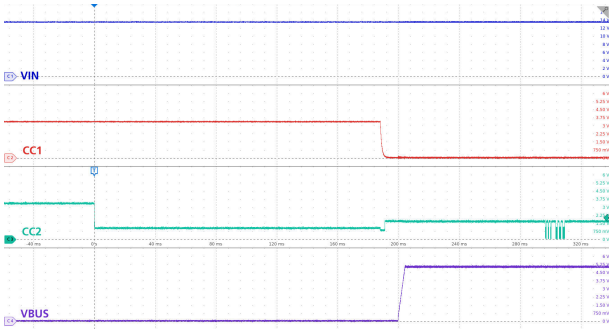

V_{IN} = 13.5V V_{BUS} = 0V to 5V I_{BUS} = 0A

Figure 9-12. Type-C Attach

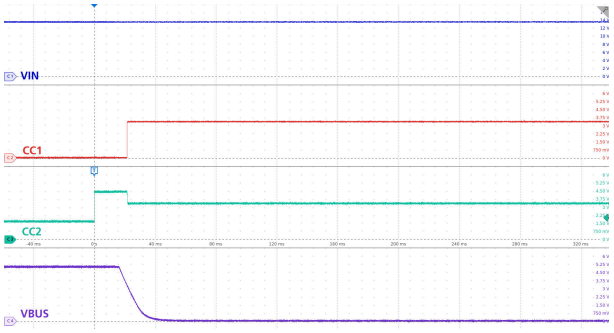

V_{IN} = 13.5V V_{BUS} = 5V to 0V I_{BUS} = 0A

Figure 9-13. Type-C Detach

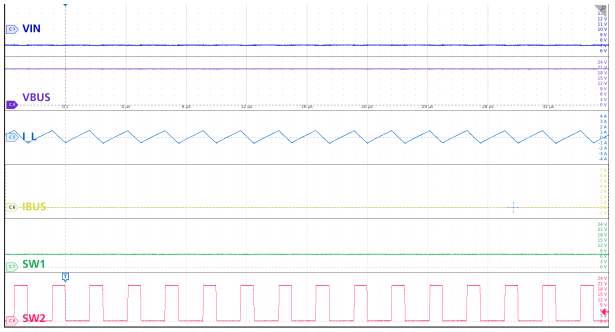

V_{IN} = 7V V_{BUS} = 20V I_{BUS} = 0A

Figure 9-14. Boost Mode: Low V_{IN}, No Load

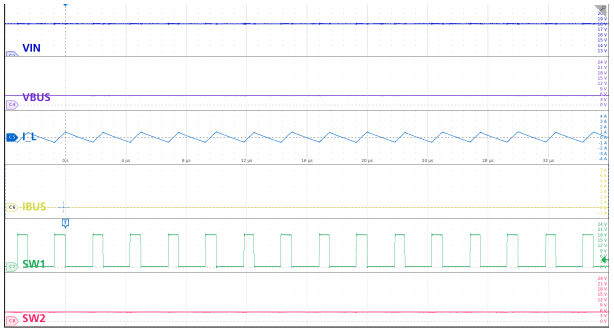

V_{IN} = 18V V_{BUS} = 5V I_{BUS} = 0A

Figure 9-15. Buck Mode: High V_{IN}, No Load

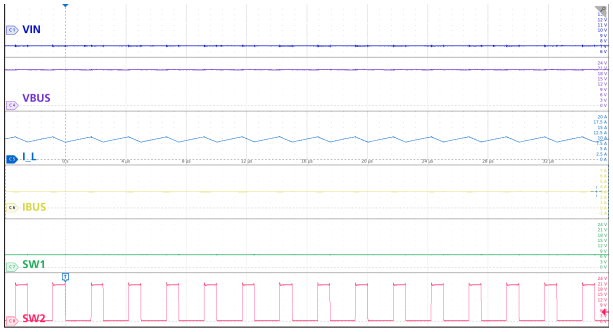

V_{IN} = 7V V_{BUS} = 20V I_{BUS} = 3A

Figure 9-16. Boost Mode: Low V_{IN}, 3A Load

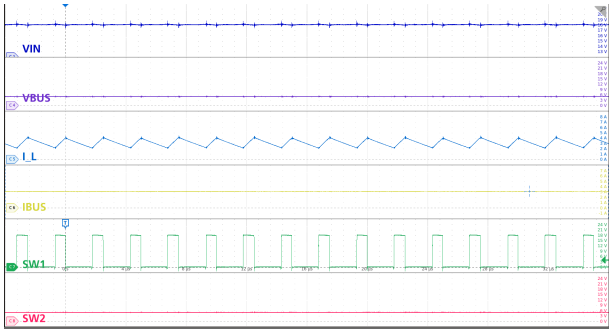

V_{IN} = 18V V_{BUS} = 5V I_{BUS} = 3A

Figure 9-17. Buck Mode: High V_{IN}, 3A Load

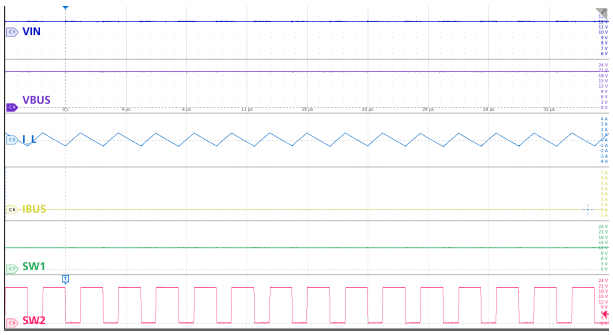

V_{IN} = 12V V_{BUS} = 20V I_{BUS} = 0A

Figure 9-18. Boost Mode: Nominal V_{IN}, No Load

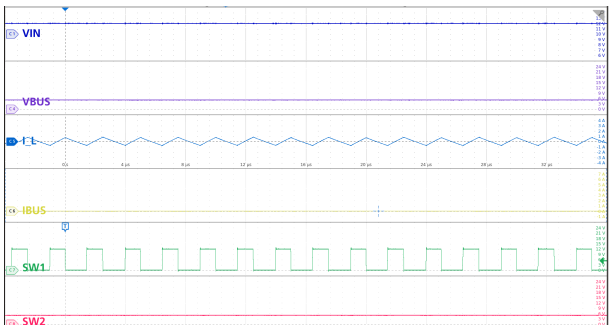

V_{IN} = 12V V_{BUS} = 5V I_{BUS} = 0A

Figure 9-19. Buck Mode: Nominal V_{IN}, No Load

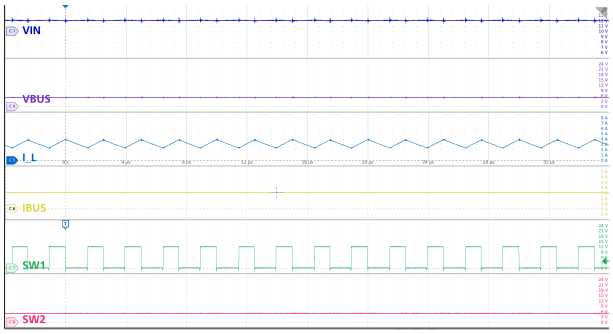

V_{IN} = 12V V_{BUS} = 5V I_{BUS} = 3A

Figure 9-20. Buck Mode: Nominal V_{IN}, 3 A Load

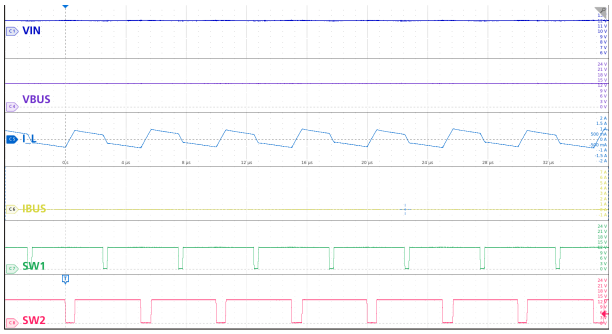

V_{IN} = 12V V_{BUS} = 13V I_{BUS} = 0A

Figure 9-21. Buck-Boost Mode: $V_{IN} \lneqq V_{BUS}$, No Load

Copyright © 2026 Texas Instruments Incorporated

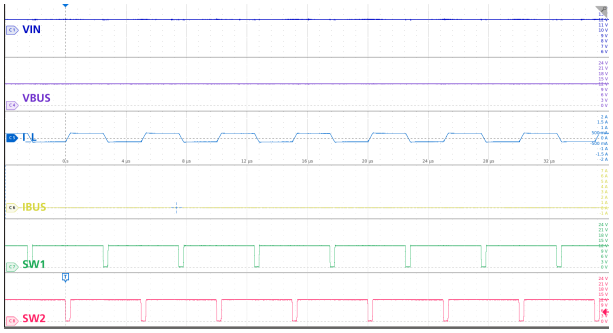

V_{IN} = 12V V_{BUS} = 12V I_{BUS} = 0A

Figure 9-22. Buck-Boost Mode: V_{IN} = V_{BUS}, No Load

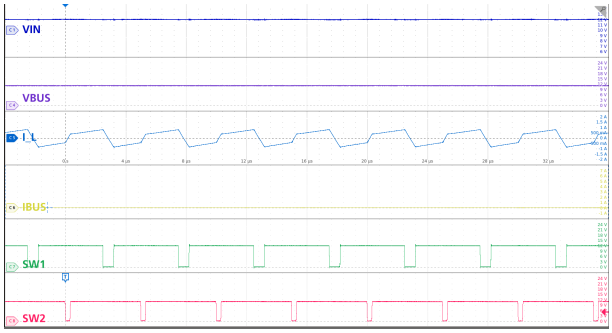

V_{IN} = 12V V_{BUS} = 11V I_{BUS} = 0A

Figure 9-23. Buck-Boost Mode: VIN ≷ VBUS, No Load

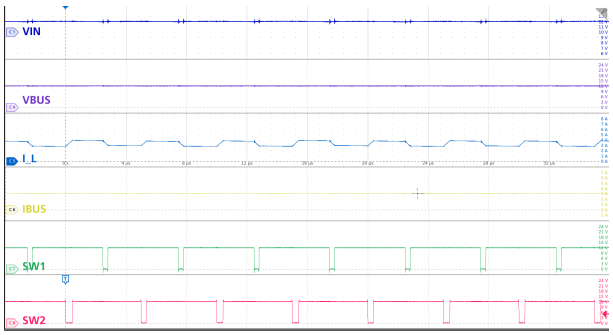

V_{IN} = 12V V_{BUS} = 12V I_{BUS} = 3A

Figure 9-24. Buck-Boost Mode: V_{IN} = V_{BUS}, 3A Load

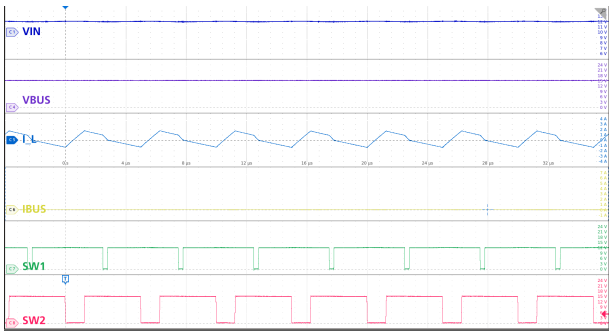

V_{IN} = 12V V_{BUS} = 15V I_{BUS} = 0A

Figure 9-25. Buck-Boost Mode: Nominal V_{IN}, No Load

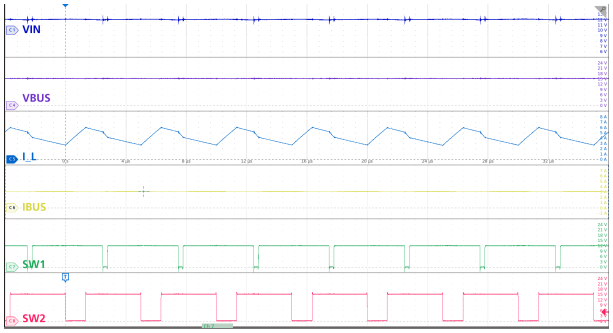

V_{IN} = 12V V_{BUS} = 15V I_{BUS} = 3A

Figure 9-26. Buck-Boost Mode: Nominal V_{IN}, 3A Load

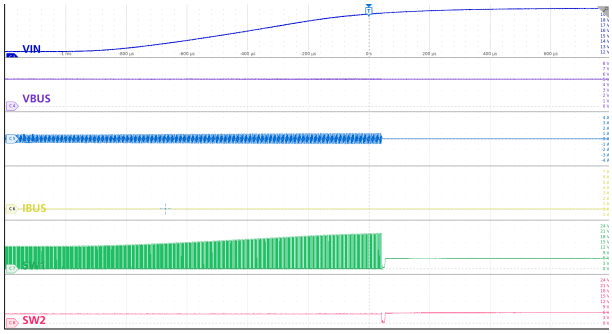

V_{IN} 12V ➔ 20V

Figure 9-27. $V_{IN(OVP)}$ Entry

V_{IN} 20V ➔ 12V

Figure 9-28. $V_{IN(OVP)}$ Recovery

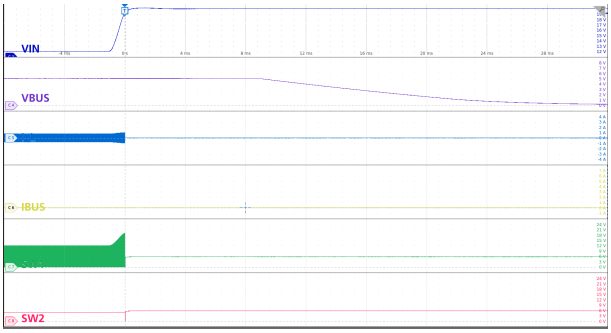

V_{IN} 12V ➔ 20V V_{BUS} = 0V I_{BUS} = 0A

Figure 9-29. $V_{IN(OVP)}$ Showing V_{BUS} Discharge

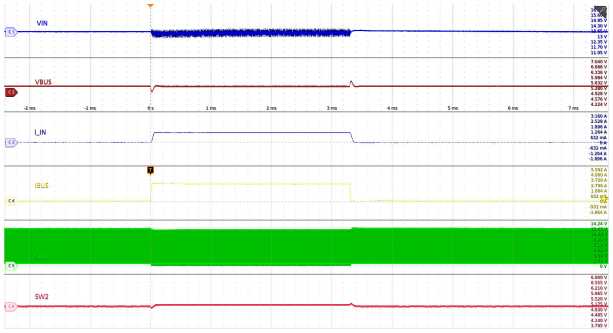

V_{IN} = 13.5V V_{BUS} = 5V I_{BUS} 0A ➔ 3A

Figure 9-30. Load Transient (Buck): V_{BUS} = 5V

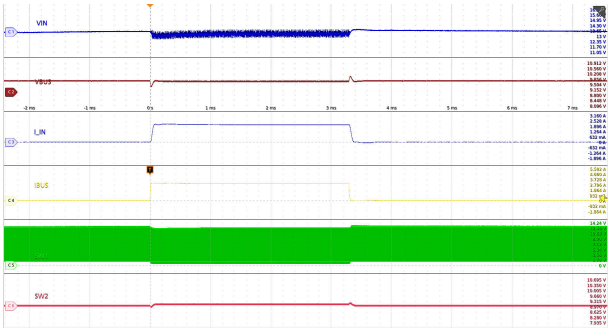

V_{IN} = 13.5V V_{BUS} = 9V I_{BUS} 0A ➔ 3A

Figure 9-31. Load Transient (Buck): V_{BUS} = 9V

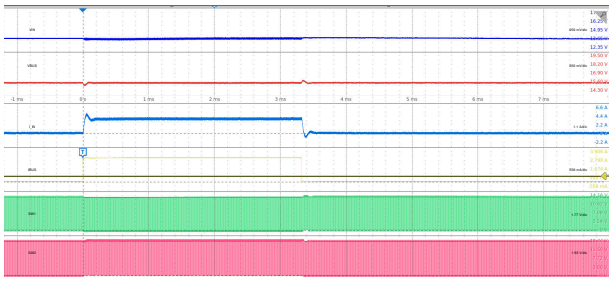

V_{IN} = 13.5V V_{BUS} = 15V I_{BUS} 0A ➔ 3A

Figure 9-32. Load Transient (Buck-Boost): V_{BUS} = 15V

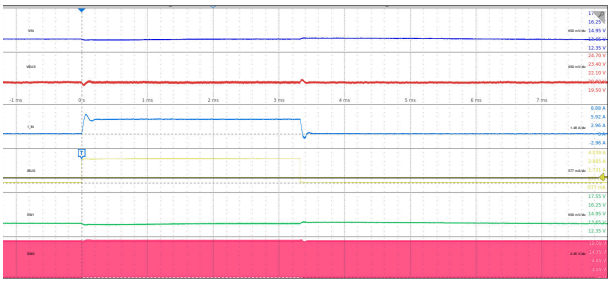

V_{IN} = 13.5V V_{BUS} = 20V I_{BUS} 0A ➔ 3A

Figure 9-33. Load Transient (Boost): V_{BUS} = 20V

Copyright © 2026 Texas Instruments Incorporated

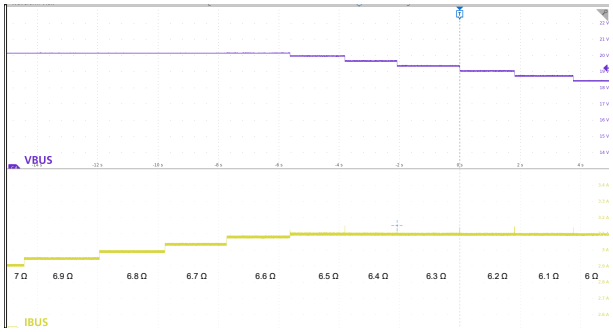

V_{IN} 12V V_{BUS} = 20V I_{LIMIT} = 3.1A

Figure 9-34. Current Limit: Stepped Resistive Load

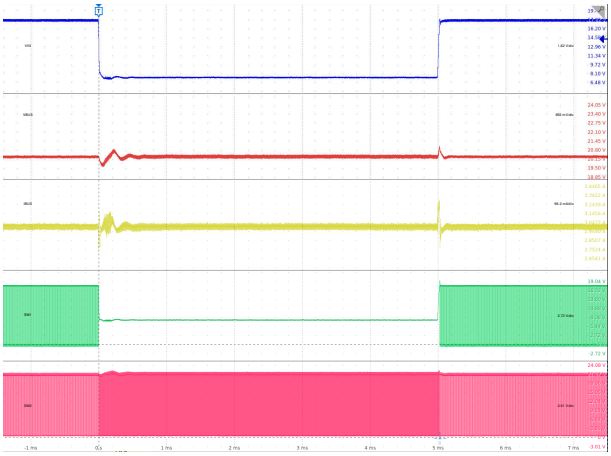

V_{IN} 7V ➔ 18V V_{BUS} = 20V I_{BUS} = 3A

Figure 9-35. Line Transient: V_{BUS} = 20V

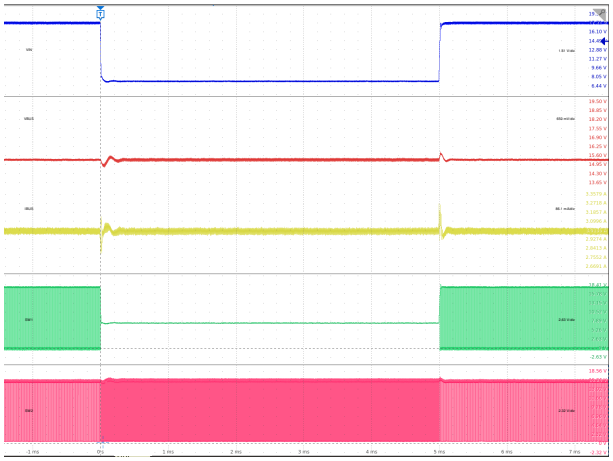

V_{IN} 7V ➔ 18V V_{BUS} = 15V I_{BUS} = 3A

Figure 9-36. Line Transient: V_{BUS} = 15V

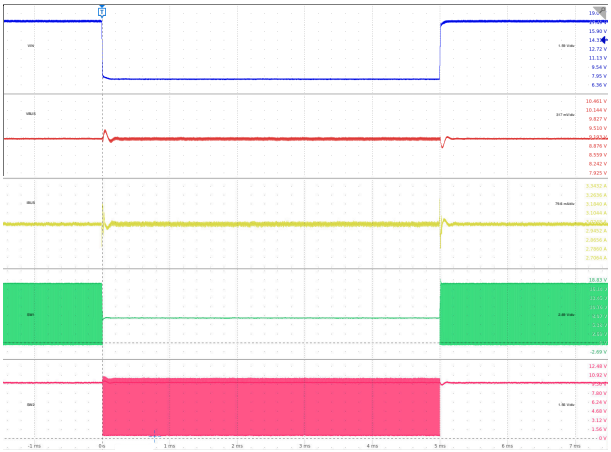

V_{IN} 7V ➔ 18V V_{BUS} = 9V I_{BUS} = 3A

Figure 9-37. Line Transient: V_{BUS} = 9V

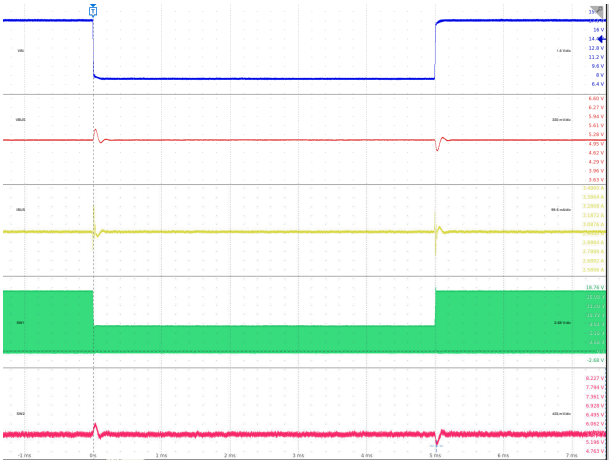

V_{IN} 7V ➔ 18V V_{BUS} = 5V I_{BUS} = 3A

Figure 9-38. Line Transient: V_{BUS} = 5V

9.3 Power Supply Recommendations

The TPS25762-Q1 is a power management device typically operated from an automotive battery or any dc voltage source within the specified V_{IN} input range. The supply must be capable of supplying sufficient current based on the maximum inductor current in boost mode operation. The input supply is bypassed with bulk capacitors at the input of the application board to avoid ringing due to parasitic impedance of the connecting cables. A typical choice is an aluminum electrolytic capacitor of 47 to 100µF.

9.4 Layout

9.4.1 Layout Guidelines

The basic PCB board layout requires separation of sensitive signal and power paths. This checklist must be followed to get good performance for a well-designed board.

- Use a combination of bulk capacitors and smaller ceramic capacitors with low series impedance for the IN, OUT, and V_{BUS} capacitors. Place the smaller capacitors closer to the IC to provide a low impedance path for high di/dt switching currents.
- Refer to Table 9-1 for suggested C_{IN} values. Place the input bypass capacitors, C_{IN} and C_{IN_HF}, as close to the IN and PGND pins as possible to minimize the loop area for input switching current in buck operation. The C_{IN_HF} capacitors must be as close as possible - see Figure 9-4. The IN and PGND pins transverse the package and it is highly recommended to split C_{IN} and C_{IN_HF} such that capacitors are placed on either side.
- Place the output filter capacitors, C_{OUT} and C_{OUT_HF}, as close to the OUT and PGND pins as possible to minimize the loop area for output switching current in boost operation. Refer to Table 9-1 for suggested C_{OUT} and C_{OUT_HF} values.
- Place the current sense resistor and filter components. R_{SNS}, R_{CSP}, R_{CSN}, and C_{FLT}. Place the filter capacitor for the current sense signal as close to the IC CSP and CSN/BUS as possible. Use Kelvin connections between R_{SNS} through the CSP and CSN resistors and to the CSP and CSN/BUS pins to avoid creating offsets in the current sense amplifier. Avoid crossing noisy areas such as SW1 and SW2 nodes. The recommended values in Table 9-2 provide a good starting point for any fine adjustment required to meet PPS current limit accuracy requirements. When deviating from recommended values, R_{CSP} must not be larger than 10 ohms. R_{CSN} must be 0 ohms. CFLT cannot be larger than 0.33µF.
- Place C_{BUS} between the R_{SNS} and the USB Type-C connector. See Table 9-1 for suggested C_{BUS} values. .
- Place the C_{IN}, C_{OUT}, and C_{BUS} ground connections as close as possible to the IC with thick ground trace and/or planes on multiple layers.
- Minimize the SW1 and SW2 loop areas as these are high dv/dt nodes.
- Place the LDO_5V bypass capacitors, C_{5V} and C_{5V_HF} close to the IC pin, between the LDO_5V and PGND pins. A 4.7 µF and 0.1 µF ceramic capacitors are typically used. LDO_5V supplies LDO_3V3 and LDO_1V5 as well as the low side buck and boost MOSFETs.
- Place the LDO_3V3 bypass capacitors, C_{3V3} and C_{3V3_HF} close to the IC pin, between the LDO_3V3 and AGND pins. A 4.7 µF and 0.1 µF ceramic capacitors are typically used. LDO_3V3 supplies the analog IO circuits.
- Place the LDO_1V5 bypass capacitors, C_{1V5} and C_{1V5_HF} close to the IC pin, between the LDO_1V5 and AGND pins. A 4.7 µF and 0.1 µF ceramic capacitors are typically used. LDO_3V3 supplies the Cortex M0 and digital circuits.
- Place the BOOT1 bootstrap capacitor close to the IC and connect directly to the BOOT1 to SW1 pins. For EMI mitigation, add a series resistor R_{BOOT1}.
- Place the BOOT2 bootstrap capacitor close to the IC and connect directly to the BOOT2 to SW2 pins. For EMI mitigation, add a series resistor R_{BOOT2}.
- Bypass the TVSP pin to PGND with a low ESR ceramic capacitor, C_{TVSP} located close to the IC. A 0.1 µF ceramic capacitor is typically used. R_{TVSP_DAMP} and C_{TVSP_DAMP} must be added in parallel close to C_{TVSP}. 10Ω and 0.47µF are recommended values.
- Use care to separate the power and signal paths so that no power or switching current flows through the AGND connections corrupting the USB PD modem or GPIO signals. Connect the PGND and AGND traces near the AGND pin.
- USB data lines, DP and DM must be differentially routed between the IC pins and USB connector. Impedance control is based on the PCB stack-up. 90Ω differential is recommended. Route the DP and DM USB signals

Copyright © 2026 Texas Instruments Incorporated

using a minimum of vias and corners which reduces signal reflections and impedance changes. When a via must be used, increase the clearance size around it to minimize its capacitance. Each via introduces discontinuities in the transmission line of the signal and increases the chance of picking up interference from the other layers of the board. Be careful when designing test points on twisted pair lines; through-hole pins are not recommended. When it becomes necessary to turn 90°, use two 45° turns or an arc instead of making a single 90° turn to reduce reflections on the signal traces by minimizing impedance discontinuities. Avoid stubs on the high-speed USB signals to prevent signal reflections. If a stub is unavoidable, keep the length to less than 200mm.

- CC lines must be routed with a 10mil trace to provide the needed current for supporting powered Type-C cables through VCONN. For more information on VCONN refer to the Type-C specifications. For the 330pF CC capacitor GND pins use a 16mil trace if possible.
- Fan out GPIO signals on the top or bottom layer using either a 8mil or 10mil traces.

9.4.2 Layout Example

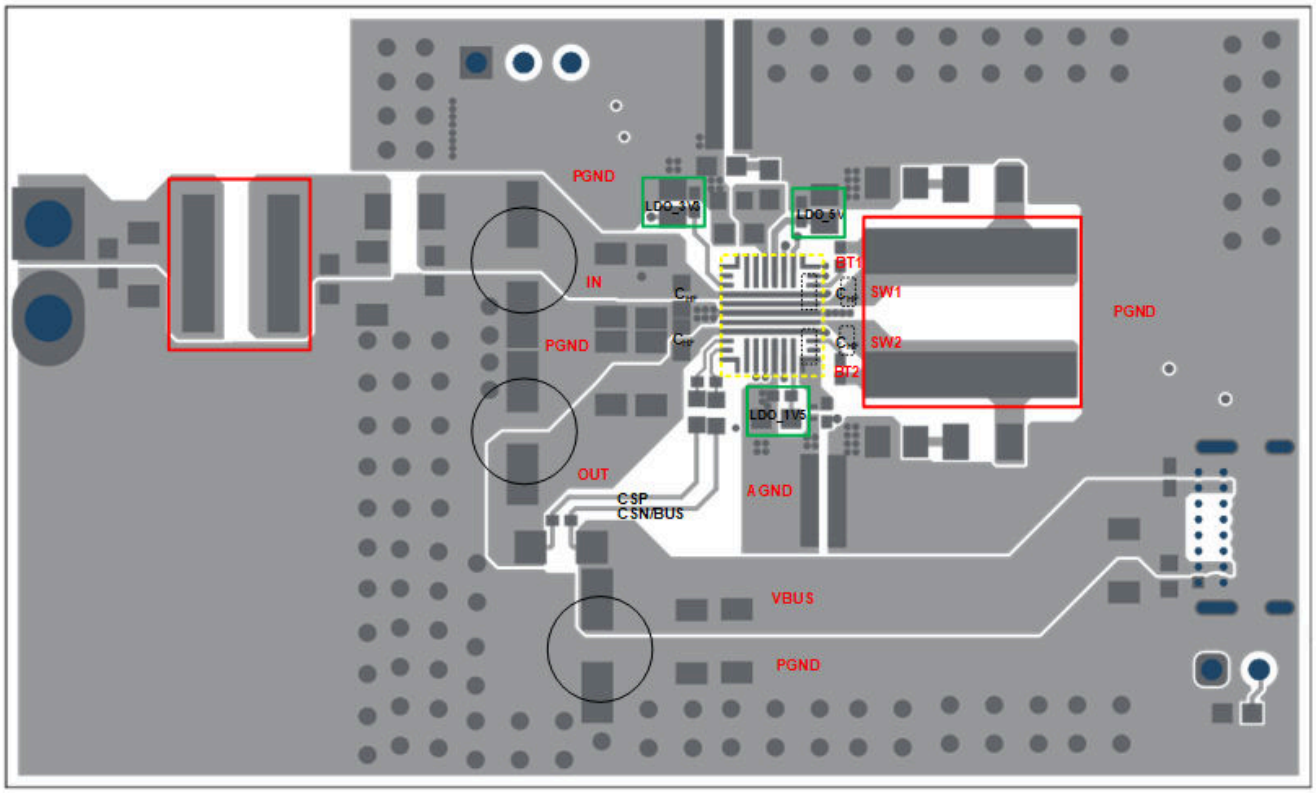

Figure 9-39. TPS25762-Q1 Power Stage Layout

10 Device and Documentation Support

10.1 Documentation Support

10.1.1 Related Documentation

Please visit TI homepage for latest technical document including application notes, user guides, and reference designs.

IC Package Thermal Metrics application report, *Semiconductor and IC Package Thermal Metrics*.

10.2 Receiving Notification of Documentation Updates

To receive notification of documentation updates, navigate to the device product folder on ti.com. Click on *Notifications* to register and receive a weekly digest of any product information that has changed. For change details, review the revision history included in any revised document.

10.3 Support Resources

TI E2E™ support forums are an engineer's go-to source for fast, verified answers and design help — straight from the experts. Search existing answers or ask your own question to get the quick design help you need.

Linked content is provided "AS IS" by the respective contributors. They do not constitute TI specifications and do not necessarily reflect TI's views; see TI's Terms of Use.

10.4 Trademarks

DisplayPort™ is a trademark of Video Electronics Standards Association (VESA).
USB-C™ is a trademark of USB Implementers Forum.
HotRod™ and TI E2E™ are trademarks of Texas Instruments.
USB Type-C® is a registered trademark of USB Implementers Forum.
ARM® and Cortex® are registered trademarks of Arm Limited (or its subsidiaries) in the US and/or elsewhere.
All trademarks are the property of their respective owners.

10.5 Electrostatic Discharge Caution

This integrated circuit can be damaged by ESD. Texas Instruments recommends that all integrated circuits be handled with appropriate precautions. Failure to observe proper handling and installation procedures can cause damage.

ESD damage can range from subtle performance degradation to complete device failure. Precision integrated circuits may be more susceptible to damage because very small parametric changes could cause the device not to meet its published specifications.

10.6 Glossary

TI Glossary	This glossary lists and explains terms, acronyms, and definitions.

11 Revision History

NOTE: Page numbers for previous revisions may differ from page numbers in the current version.

Changes from Revision B (October 2024) to Revision C (October 2026) **Page**

- Updated the supported USB-PD specification compliance version from 3.1 to 3.2; removed 3.1 TID listings... 1
- Updated legacy terminology throughout document... 1
- Added TPS25762FQRQLRQ1, TPS25763FQRQLRQ1 and TPS25772FQRQLRQ1 devices to Device Comparison Table... 3
- Added typical specification value for Supply Voltage (VIN) Shutdown Current at TJ = 85°C... 9
- Updated TVSP test conditions to include TPS257xxF-Q1 devices... 16
- Added description and table for TPS25762FQRQLRQ1 and TPS25772FQRQLRQ1 R_{TVSP} configuration settings and default application configuration settings when EEPROM boot is not available... 36
- Updated table for TPS25762DQRQLRQ1 and TPS25772DQRQLRQ1 default application configuration settings to include I2C address for External DCDC... 36

Copyright © 2026 Texas Instruments Incorporated

- Updated the description for defining NTC voltage settings when using the GUI.....66

Changes from Revision A (September 2023) to Revision B (October 2024) **Page**

- Added TPS25762DQRQLRQ1, TPS25763DQRQLRQ1 and TPS25772DQRQLRQ1 devices to Device Comparison Table.....3
- Updated TVSP test conditions to include TPS257xxD-Q1 devices.....16
- Updated for TPS25762DQRQLRQ1 and TPS25772DQRQLRQ1 R_{TVSP} configuration settings; default application configuration when EEPROM boot is not available.....36

Changes from Revision * (December 2022) to Revision A (September 2023) **Page**

- Added TPS25762-Q1 and TPS25772-Q1 USB–IF certification TID.....1
- Added wettable flank package information.....1
- Added TPS25762CAQRQLRQ1, TPS25772CAQRQLRQ1, TPS25762CQRQLRQ1 and TPS25772CQRQLRQ1 devices to Device Comparison Table.....3
- Added TPS25762CAQRQLRQ1 and TPS25772CAQRQLRQ1 R_{TVSP} configuration settings.....36
- Added R_{TVSP} Circuit Configuration for applications requiring a configuration other than TVSP Index 0 (R_{TVSP} open).....36

12 Mechanical, Packaging, and Orderable Information

The following pages include mechanical, packaging, and orderable information. This information is the most current data available for the designated devices. This data is subject to change without notice and revision of this document. For browser-based versions of this data sheet, refer to the left-hand navigation.

Copyright © 2026 Texas Instruments Incorporated

PACKAGE OUTLINE

RQL0029A **VQFN-HR - 1 mm max height**

PLASTIC QUAD FLATPACK-NO LEAD

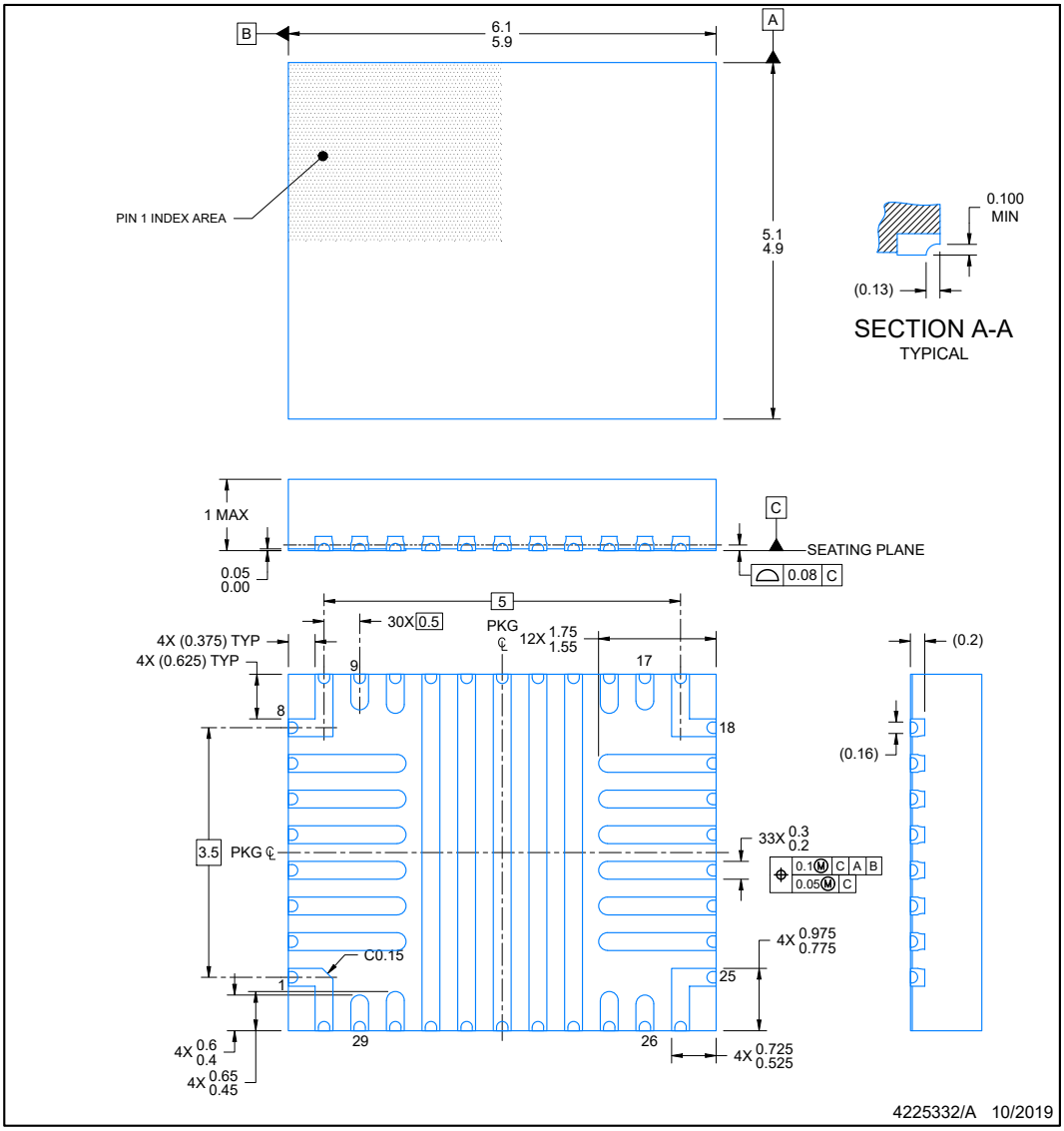

NOTES:

1. All linear dimensions are in millimeters. Any dimensions in parenthesis are for reference only. Dimensioning and tolerancing per ASME Y14.5M.
2. This drawing is subject to change without notice.

Copyright © 2026 Texas Instruments Incorporated

EXAMPLE BOARD LAYOUT

RQL0029A — **VQFN-HR - 1 mm max height**

PLASTIC QUAD FLATPACK-NO LEAD

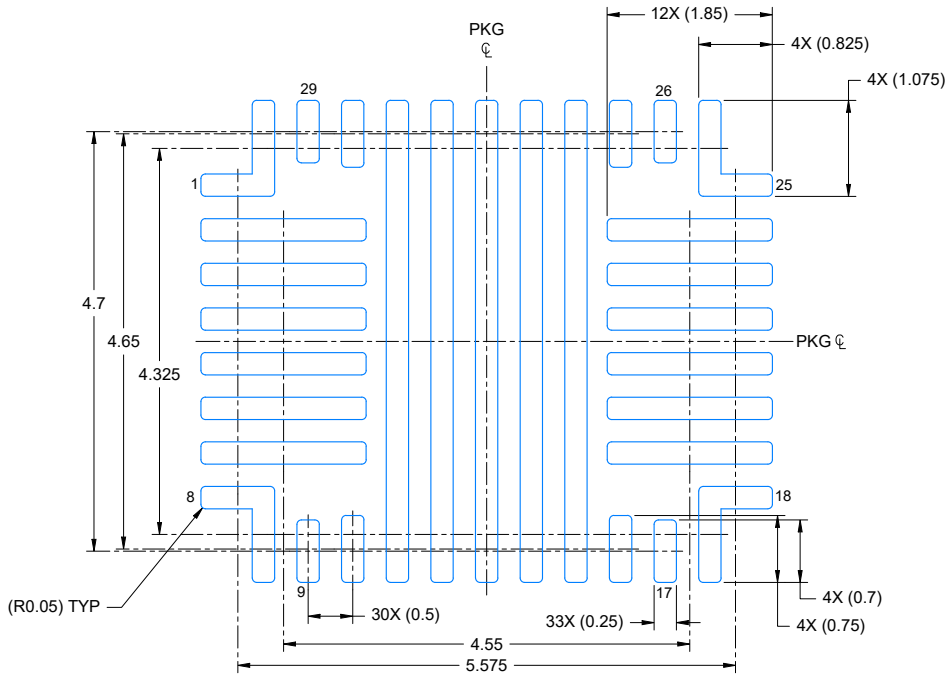

LAND PATTERN EXAMPLE
EXPOSED METAL SHOWN
SCALE: 15X

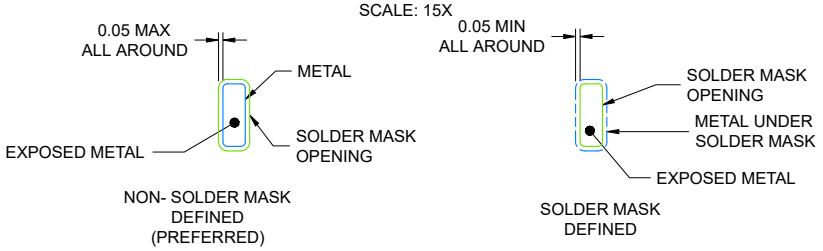

SOLDER MASK DETAILS
NOT TO SCALE

4225332/A 10/2019

NOTES: (continued)

3. For more information, see Texas Instruments literature number SLUA271 (www.ti.com/lit/slua271).
4. Solder mask tolerances between and around signal pads can vary based on board fabrication site.

Copyright © 2026 Texas Instruments Incorporated

EXAMPLE STENCIL DESIGN

RQL0029A **VQFN-HR - 1 mm max height**

PLASTIC QUAD FLATPACK-NO LEAD

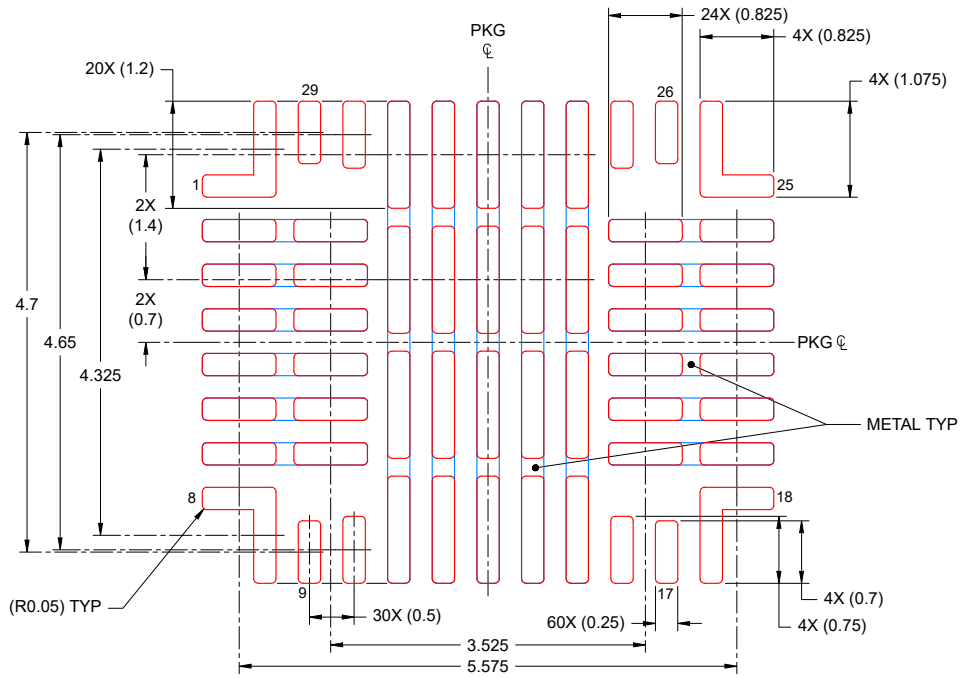

SOLDER PASTE EXAMPLE
BASED ON 0.1 mm THICK STENCIL

PADS 2-7 & 19-24: 89%
PADS 11-15: 88%
SCALE: 15X

4225332/A 10/2019

NOTES: (continued)

5. Laser cutting apertures with trapezoidal walls and rounded corners may offer better paste release. IPC-7525 may have alternate design recommendations.

Copyright © 2026 Texas Instruments Incorporated

PACKAGING INFORMATION

Orderable part number	Status (1)	Material type (2)	Package | Pins	Package qty | Carrier	RoHS (3)	Lead finish/ Ball material (4)	MSL rating/ Peak reflow (5)	Op temp (°C)	Part marking (6)
TPS25762CAQRQLRQ1	Active	Production	VQFN-HR (RQL) | 29	3000 | LARGE T&R	Yes	NIPDAU	Level-2-260C-1 YEAR	-40 to 125	TPS25762 CA
TPS25762CAQRQLRQ1.A	Active	Production	VQFN-HR (RQL) | 29	3000 | LARGE T&R	Yes	NIPDAU	Level-2-260C-1 YEAR	-40 to 125	TPS25762 CA
TPS25762CQRQLRQ1	Active	Production	VQFN-HR (RQL) | 29	3000 | LARGE T&R	Yes	NIPDAU	Level-2-260C-1 YEAR	-40 to 125	TPS25762 C
TPS25762CQRQLRQ1.A	Active	Production	VQFN-HR (RQL) | 29	3000 | LARGE T&R	Yes	NIPDAU	Level-2-260C-1 YEAR	-40 to 125	TPS25762 C
TPS25762DQRQLRQ1	Active	Production	VQFN-HR (RQL) | 29	3000 | LARGE T&R	Yes	NIPDAU	Level-2-260C-1 YEAR	-40 to 125	T25762 D
TPS25762DQRQLRQ1.A	Active	Production	VQFN-HR (RQL) | 29	3000 | LARGE T&R	Yes	NIPDAU	Level-2-260C-1 YEAR	-40 to 125	T25762 D
TPS25762FQRQLRQ1	Active	Production	VQFN-HR (RQL) | 29	3000 | LARGE T&R	Yes	NIPDAU	Level-2-260C-1 YEAR	-40 to 125	T25762 F

(1) **Status:** For more details on status, see our product life cycle.

(2) **Material type:** When designated, preproduction parts are prototypes/experimental devices, and are not yet approved or released for full production. Testing and final process, including without limitation quality assurance, reliability performance testing, and/or process qualification, may not yet be complete, and this item is subject to further changes or possible discontinuation. If available for ordering, purchases will be subject to an additional waiver at checkout, and are intended for early internal evaluation purposes only. These items are sold without warranties of any kind.

(3) **RoHS values:** Yes, No, RoHS Exempt. See the TI RoHS Statement for additional information and value definition.

(4) **Lead finish/Ball material:** Parts may have multiple material finish options. Finish options are separated by a vertical ruled line. Lead finish/Ball material values may wrap to two lines if the finish value exceeds the maximum column width.

(5) **MSL rating/Peak reflow:** The moisture sensitivity level ratings and peak solder (reflow) temperatures. In the event that a part has multiple moisture sensitivity ratings, only the lowest level per JEDEC standards is shown. Refer to the shipping label for the actual reflow temperature that will be used to mount the part to the printed circuit board.

(6) **Part marking:** There may be an additional marking, which relates to the logo, the lot trace code information, or the environmental category of the part.

Multiple part markings will be inside parentheses. Only one part marking contained in parentheses and separated by a "~" will appear on a part. If a line is indented then it is a continuation of the previous line and the two combined represent the entire part marking for that device.

Important Information and Disclaimer: The information provided on this page represents TI's knowledge and belief as of the date that it is provided. TI bases its knowledge and belief on information provided by third parties, and makes no representation or warranty as to the accuracy of such information. Efforts are underway to better integrate information from third parties. TI has taken and continues to take reasonable steps to provide representative and accurate information but may not have conducted destructive testing or chemical analysis on incoming materials and chemicals. TI and TI suppliers consider certain information to be proprietary, and thus CAS numbers and other limited information may not be available for release.

In no event shall TI's liability arising out of such information exceed the total purchase price of the TI part(s) at issue in this document sold by TI to Customer on an annual basis.

TAPE AND REEL INFORMATION

REEL DIMENSIONS

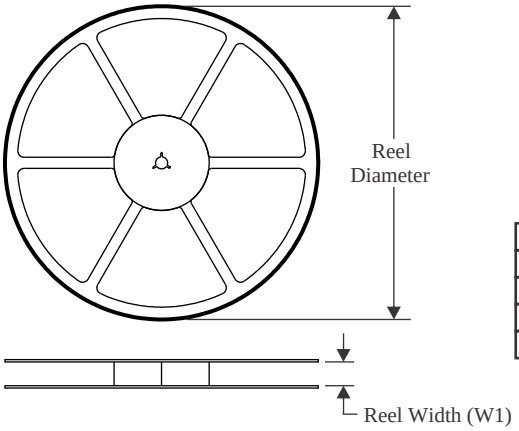

TAPE DIMENSIONS

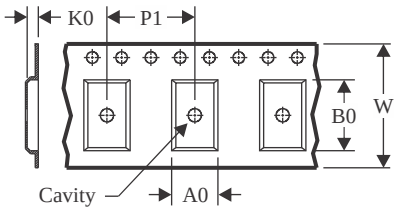

A0	Dimension designed to accommodate the component width
B0	Dimension designed to accommodate the component length
K0	Dimension designed to accommodate the component thickness
W	Overall width of the carrier tape
P1	Pitch between successive cavity centers

QUADRANT ASSIGNMENTS FOR PIN 1 ORIENTATION IN TAPE

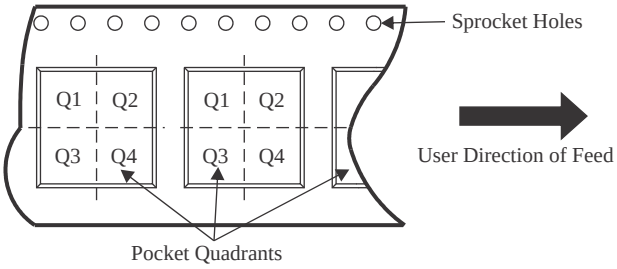

*All dimensions are nominal

Device	Package Type	Package Drawing	Pins	SPQ	Reel Diameter (mm)	Reel Width W1 (mm)	A0 (mm)	B0 (mm)	K0 (mm)	P1 (mm)	W (mm)	Pin1 Quadrant
TPS25762CAQRQLRQ1	VQFN-HR	RQL	29	3000	330.0	12.4	5.3	6.3	1.15	8.0	12.0	Q2
TPS25762CQRQLRQ1	VQFN-HR	RQL	29	3000	330.0	12.4	5.3	6.3	1.15	8.0	12.0	Q2
TPS25762DQRQLRQ1	VQFN-HR	RQL	29	3000	330.0	12.4	5.3	6.3	1.15	8.0	12.0	Q2
TPS25762FQRQLRQ1	VQFN-HR	RQL	29	3000	330.0	12.4	5.3	6.3	1.15	8.0	12.0	Q2

TAPE AND REEL BOX DIMENSIONS

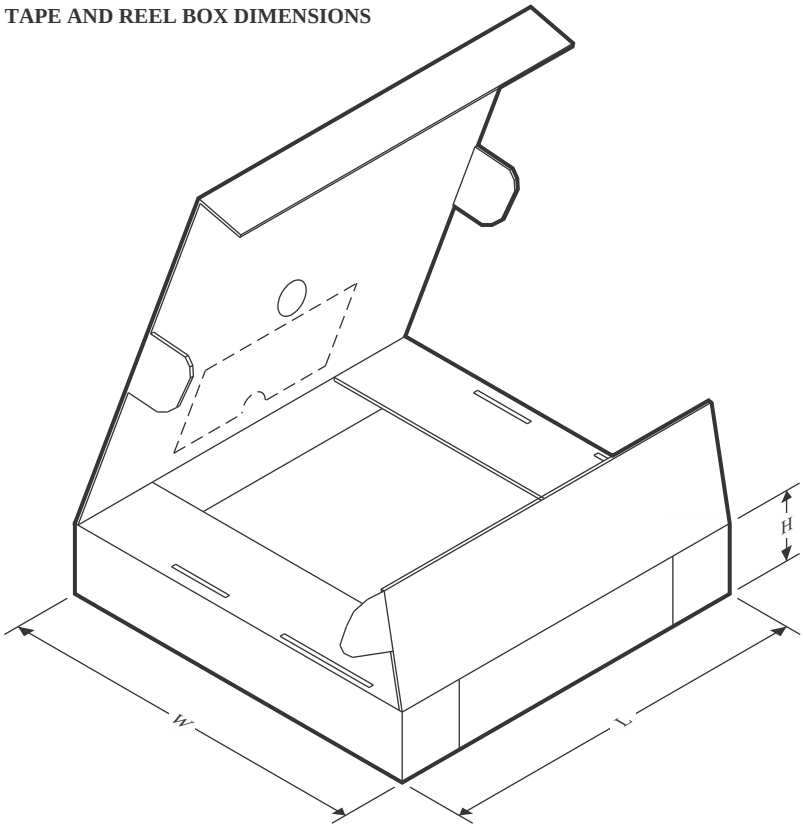

*All dimensions are nominal

Device	Package Type	Package Drawing	Pins	SPQ	Length (mm)	Width (mm)	Height (mm)
TPS25762CAQRQLRQ1	VQFN-HR	RQL	29	3000	367.0	367.0	35.0
TPS25762CQRQLRQ1	VQFN-HR	RQL	29	3000	360.0	360.0	36.0
TPS25762DQRQLRQ1	VQFN-HR	RQL	29	3000	360.0	360.0	36.0
TPS25762FQRQLRQ1	VQFN-HR	RQL	29	3000	360.0	360.0	36.0

IMPORTANT NOTICE AND DISCLAIMER

TI PROVIDES TECHNICAL AND RELIABILITY DATA (INCLUDING DATASHEETS), DESIGN RESOURCES (INCLUDING REFERENCE DESIGNS), APPLICATION OR OTHER DESIGN ADVICE, WEB TOOLS, SAFETY INFORMATION, AND OTHER RESOURCES “AS IS” AND WITH ALL FAULTS, AND DISCLAIMS ALL WARRANTIES, EXPRESS AND IMPLIED, INCLUDING WITHOUT LIMITATION ANY IMPLIED WARRANTIES OF MERCHANTABILITY, FITNESS FOR A PARTICULAR PURPOSE OR NON-INFRINGEMENT OF THIRD PARTY INTELLECTUAL PROPERTY RIGHTS.

These resources are intended for skilled developers designing with TI products. You are solely responsible for (1) selecting the appropriate TI products for your application, (2) designing, validating and testing your application, and (3) ensuring your application meets applicable standards, and any other safety, security, regulatory or other requirements.

These resources are subject to change without notice. TI grants you permission to use these resources only for development of an application that uses the TI products described in the resource. Other reproduction and display of these resources is prohibited. No license is granted to any other TI intellectual property right or to any third party intellectual property right. TI disclaims responsibility for, and you fully indemnify TI and its representatives against any claims, damages, costs, losses, and liabilities arising out of your use of these resources.

TI’s products are provided subject to TI’s Terms of Sale, TI’s General Quality Guidelines, or other applicable terms available either on ti.com or provided in conjunction with such TI products. TI’s provision of these resources does not expand or otherwise alter TI’s applicable warranties or warranty disclaimers for TI products. Unless TI explicitly designates a product as custom or customer-specified, TI products are standard, catalog, general purpose devices.

TI objects to and rejects any additional or different terms you may propose.

Copyright © 2026, Texas Instruments Incorporated

Last updated 10/2025