TPA0211 2-W Mono Audio Power Amplifier

1 Features

- 2 W Into 4 Ω From 5-V Supply
- 0.6 W Into 4 Ω From 3-V Supply
- Wide Power Supply Compatibility: 3 V to 5 V
- Low Supply Current:
  - 4 mA Typical at 5 V
  - 4 mA Typical at 3 V
- Shutdown Control: 1 µA Typical
- Shutdown Pin Is TTL Compatible
- –40°C to 85°C Operating Temperature Range
- Space-Saving, Thermally-Enhanced MSOP-PowerPAD™ Packaging

2 Applications

- Wireless Communictors
- Notebook PCs
- PDAs
- Other Small Portable Audio Devices

3 Description

The TPA0211 is a 2-W mono bridge-tied-load (BTL) amplifier designed to drive speakers with as low as 4-Ω impedance. The device is ideal for small wireless communicators, notebook PCs, PDAs, anyplace a mono speaker and stereo headphones are required. From a 5-V supply, the TPA0211 can deliver 2 W of power into a 4-Ω speaker.

The gain of the input stage is set by the user-selected input resistor and a 50-kΩ internal feedback resistor ($A_V = -R_F / R_I$). The power stage is internally configured with a gain of –1.25 V/V in SE mode, and –2.5 V/V in BTL mode. Thus, the overall gain of the amplifier is –62.5 kΩ/R_I in SE mode and –125 kΩ/R_I in BTL mode. The input terminals are high-impedance CMOS inputs, and can be used as summing nodes.

The TPA0211 is available in the 8-pin thermally-enhanced MSOP-PowerPAD package (DGN) and operates over an ambient temperature range of –40°C to 85°C.

Device Information(1)

PART NUMBER	PACKAGE	BODY SIZE (NOM)
TPA0211	MSOP-PowerPAD (8)	3.00 mm × 3.00 mm

(1) For all available packages, see the orderable addendum at the end of the data sheet.

Simplified Application Schematic

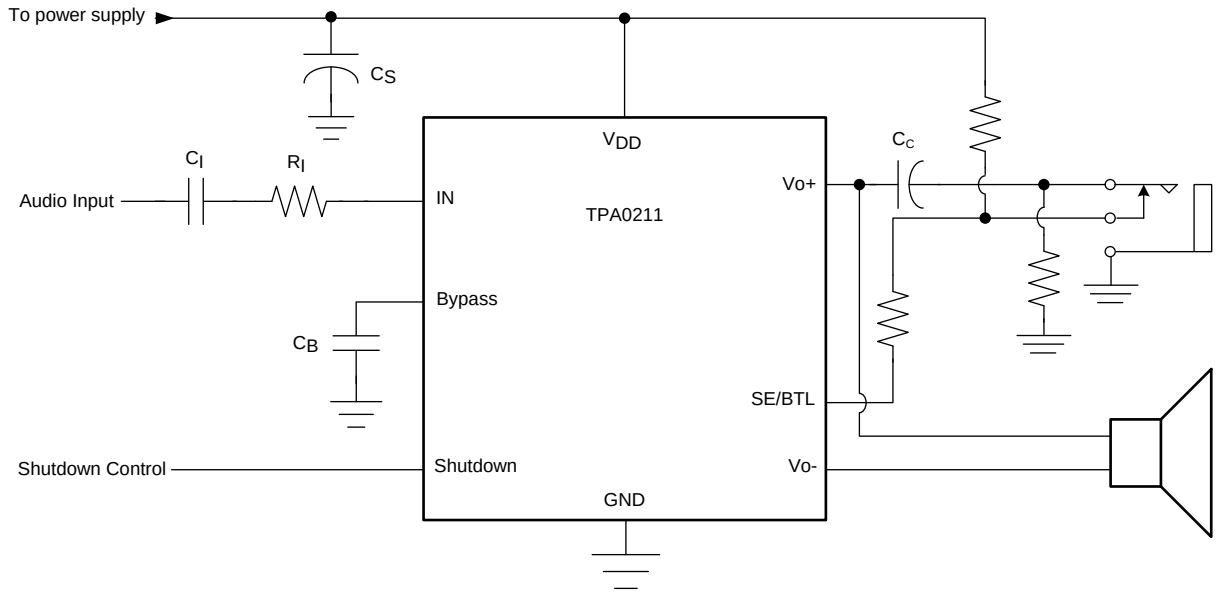

Copyright © 2016, Texas Instruments Incorporated

An IMPORTANT NOTICE at the end of this data sheet addresses availability, warranty, changes, use in safety-critical applications, intellectual property matters and other important disclaimers. PRODUCTION DATA.

Table of Contents

1 Features ... 1
2 Applications ... 1
3 Description ... 1
4 Revision History ... 2
5 Device Comparison Table ... 3
6 Pin Configuration and Functions ... 3
7 Specifications ... 4
7.1 Absolute Maximum Ratings ... 4
7.2 ESD Ratings ... 4
7.3 Recommended Operating Conditions ... 4
7.4 Thermal Information ... 4
7.5 Electrical Characteristics – 3 V ... 5
7.6 Electrical Characteristics – 5 V ... 6
7.7 Dissipation Ratings ... 6
7.8 Typical Characteristics ... 7
8 Parameter Measurement Information ... 11
8.1 Set-Up for Graphs ... 11
9 Detailed Description ... 12
9.1 Overview ... 12
9.2 Functional Block Diagram ... 12
9.3 Feature Description ... 13
9.4 Device Functional Modes ... 17
10 Application and Implementation ... 19
10.1 Application Information ... 19
10.2 Typical Application ... 19
11 Power Supply Recommendations ... 23
11.1 Power Supply Decoupling Capacitors ... 23
12 Layout ... 23
12.1 Layout Guidelines ... 23
12.2 Layout Example ... 23
12.3 Thermal Considerations ... 24
13 Device and Documentation Support ... 25
13.1 Documentation Support ... 25
13.2 Receiving Notification of Documentation Updates 25
13.3 Community Resources ... 25
13.4 Trademarks ... 25
13.5 Electrostatic Discharge Caution ... 25
13.6 Glossary ... 25
14 Mechanical, Packaging, and Orderable Information ... 25

4 Revision History

NOTE: Page numbers for previous revisions may differ from page numbers in the current version.

Changes from Revision D (November 2002) to Revision E	Page
• Added *ESD Ratings* table, *Feature Description* section, *Device Functional Modes*, *Application and Implementation* section, *Power Supply Recommendations* section, *Layout* section, *Device and Documentation Support* section, and *Mechanical, Packaging, and Orderable Information* section	1

Copyright © 2000–2016, Texas Instruments Incorporated

5 Device Comparison Table

DEVICE NUMBER	SPEAKER AMP TYPE	SPECIAL FEATURE	OUTPUT POWER (W)	PSRR (dB)
TPA0211	Class AB	—	2	58
TPA0213	Class AB	—	2	65
TPA0233	Class AB	—	2	58
TPA0253	Class AB	—	1	65

6 Pin Configuration and Functions

DGN Package
8-Pin MSOP-PowerPAD
Top View

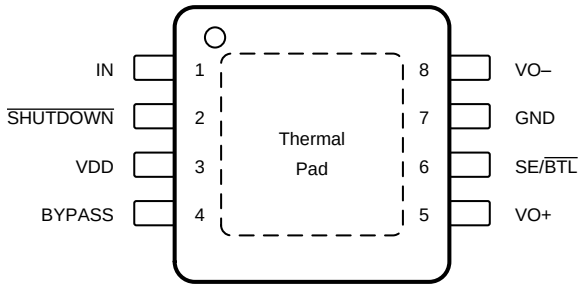

Not to scale

Pin Functions

PIN		I/O	DESCRIPTION
NAME	NO.		
BYPASS	4	I	BYPASS is the tap to the voltage divider for internal mid-supply bias. This terminal must be connected to a 0.1-µF to 1-µF capacitor.
GND	7	—	GND is the ground connection.
IN	1	I	IN is the audio input terminal.
SE/$\overline{\text{BTL}}$	6	I	When SE/$\overline{\text{BTL}}$ is held low, the TPA0211 is in BTL mode. When SE/$\overline{\text{BTL}}$ is held high, the TPA0211 is in SE mode.
$\overline{\text{SHUTDOWN}}$	2	I	$\overline{\text{SHUTDOWN}}$ places the entire device in shutdown mode when held low. TTL compatible input.
V_{DD}	3	—	V_{DD} is the supply voltage terminal.
V_{O+}	5	O	V_{O+} is the positive output for BTL and SE modes.
$V_{O–}$	8	O	$V_{O–}$ is the negative output in BTL mode and a high-impedance output in SE mode.

7 Specifications

7.1 Absolute Maximum Ratings

over operating free-air temperature range (unless otherwise noted)[1]

	MIN	MAX	UNIT
Supply voltage, V_{DD}		6	V
Input voltage, V_I	–0.3	V_{DD} + 0.3	V
Continuous total power dissipation	Internally limited (see *Dissipation Ratings*)		
Lead temperature, 1.6 mm (1/16 inch) from case (10 s)		260	°C
Operating junction temperature, T_J	–40	150	°C
Storage temperature, T_{stg}	–65	150	°C

(1) Stresses beyond those listed under *Absolute Maximum Ratings* may cause permanent damage to the device. These are stress ratings only, which do not imply functional operation of the device at these or any other conditions beyond those indicated under *Recommended Operating Conditions*. Exposure to absolute-maximum-rated conditions for extended periods may affect device reliability.

7.2 ESD Ratings

			VALUE	UNIT
$V_{(ESD)}$	Electrostatic discharge	Human-body model (HBM), per ANSI/ESDA/JEDEC JS-001[1]	±4000	V
		Charged-device model (CDM), per JEDEC specification JESD22-C101[2]	±1000	

(1) JEDEC document JEP155 states that 500-V HBM allows safe manufacturing with a standard ESD control process.
(2) JEDEC document JEP157 states that 250-V CDM allows safe manufacturing with a standard ESD control process.

7.3 Recommended Operating Conditions

over operating free-air temperature range (unless otherwise noted)

				MIN	NOM	MAX	UNIT
V_{DD}	Supply voltage			2.5		5.5	V
V_{IH}	High-level input voltage	SE/$\overline{BTL}$	V_{DD} = 3 V	2.7			V
			V_{DD} = 5 V	4.5			
		$\overline{SHUTDOWN}$		2			
V_{IL}	Low-level input voltage	SE/$\overline{BTL}$	V_{DD} = 3 V			1.65	V
			V_{DD} = 5 V			2.75	
		$\overline{SHUTDOWN}$				0.8	
T_A	Operating free-air temperature			–40		85	°C

7.4 Thermal Information

THERMAL METRIC[1]		TPA0211 DGN (MSOP-PowerPAD) 8 PINS	UNIT
$R_{\theta JA}$	Junction-to-ambient thermal resistance	51.9	°C/W
$R_{\theta JC(top)}$	Junction-to-case (top) thermal resistance	41.9	°C/W
$R_{\theta JB}$	Junction-to-board thermal resistance	30.5	°C/W
ψ_{JT}	Junction-to-top characterization parameter	1.5	°C/W
ψ_{JB}	Junction-to-board characterization parameter	30.2	°C/W
$R_{\theta JC(bot)}$	Junction-to-case (bottom) thermal resistance	6	°C/W

(1) For more information about traditional and new thermal metrics, see the *Semiconductor and IC Package Thermal Metrics* application report.

Copyright © 2000–2016, Texas Instruments Incorporated

7.5 Electrical Characteristics – 3 V

V_{DD} = 3 V and T_A = 25°C (unless otherwise noted)

PARAMETER		TEST CONDITIONS		MIN	TYP	MAX	UNIT
$\lvert V_{OO} \rvert$	Output offset voltage (measured differentially)	SE/$\overline{BTL}$ = 0 V, $\overline{SHUTDOWN}$ = 2 V, R_L = 8 Ω, inputs floating				30	mV
$I_{DD(BTL)}$	Supply current, BTL mode	SE/$\overline{BTL}$ = 1.375 V, $\overline{SHUTDOWN}$ = 2 V, V_{DD} = 2.5 V			4	6	mA
$I_{DD(SE)}$	Supply current, SE mode	SE/$\overline{BTL}$ = 2.25 V, $\overline{SHUTDOWN}$ = 2 V, V_{DD} = 2.5 V			2	4	mA
$I_{DD(SD)}$	Supply current, shutdown mode	SE/$\overline{BTL}$ = 3 V, $\overline{SHUTDOWN}$ = 0 V			1	10	µA
$\lvert I_{IH} \rvert$	High-level input current	V_{DD} = 3.3 V, V_I = V_{DD}	$\overline{SHUTDOWN}$			1	µA
			SE/$\overline{BTL}$			1	
$\lvert I_{IL} \rvert$	Low-level input current	V_{DD} = 3.3 V, V_I = 0 V	$\overline{SHUTDOWN}$			1	µA
			SE/$\overline{BTL}$			1	
R_F	Feedback resistor	SE/$\overline{BTL}$ = 0 V, $\overline{SHUTDOWN}$ = 2 V, V_{DD} = 2.5 V, R_L = 4 Ω		45	50	60	kΩ
OPERATING CHARACTERISTICS, R_L = 4 Ω							
P_O	Output power	THD = 1%, BTL mode, f = 1 kHz			660		mW
		THD = 0.1%, SE mode, f = 1 kHz, R_L = 32 Ω			33		
THD+N	Total harmonic distortion plus noise	P_O = 500 mW, f = 20 Hz to 20 kHz			0.3%		
B_{OM}	Maximum output power bandwidth	Gain = 2, THD = 2%			20		kHz
SNR	Signal-to-noise ratio				88		dB
V_n	Output noise voltage	C_B = 0.47 µF, f = 20 Hz to 20 kHz	BTL mode, R_L = 8 Ω, A_V = 8 dB		65		μV_{RMS}
			SE mode, R_L = 32 Ω, A_V = 2 dB		25		

7.6 Electrical Characteristics – 5 V

V_{DD} = 5 V and T_A = 25°C (unless otherwise noted)

PARAMETER		TEST CONDITIONS		MIN	TYP	MAX	UNIT
$\|V_{OO}\|$	Output offset voltage (measured differentially)	SE/$\overline{BTL}$ = 0 V, $\overline{SHUTDOWN}$ = 2 V, R_L = 8 Ω, inputs floating				30	mV
$I_{DD(BTL)}$	Supply current, BTL mode	SE/$\overline{BTL}$ = 2.75 V, $\overline{SHUTDOWN}$ = V_{DD}			4	6	mA
$I_{DD(SE)}$	Supply current, SE mode	SE/$\overline{BTL}$ = 4.5 V, $\overline{SHUTDOWN}$ = V_{DD}			2	4	mA
$I_{DD(SD)}$	Supply current, shutdown mode	SE/$\overline{BTL}$ = 5 V, $\overline{SHUTDOWN}$ = 0 V			1	10	µA
$\|I_{IH}\|$	High-level input current	V_{DD} = 5.5 V, V_I = V_{DD}	$\overline{SHUTDOWN}$			1	µA
			SE/$\overline{BTL}$			1	
$\|I_{IL}\|$	Low-level input current	V_{DD} = 5.5 V, V_I = 0 V	$\overline{SHUTDOWN}$			1	µA
			SE/$\overline{BTL}$			1	
OPERATING CHARACTERISTICS, R_L = 4 Ω							
P_O	Output power	THD = 1%, BTL mode, f = 1 kHz			2		W
		THD = 0.1%, SE mode, f = 1 kHz, R_L = 32 Ω			92		mW
THD+N	Total harmonic distortion plus noise	P_O = 1.5 W, f = 20 Hz to 20 kHz			0.2%		
B_{OM}	Maximum output power bandwidth	Gain = 2.5, THD = 2%			20		kHz
SNR	Signal-to-noise ratio				93		dB
V_n	Output noise voltage	C_B = 0.47 µF, f = 20 Hz to 20 kHz	BTL mode, R_L = 8 Ω, A_V = 8 dB		65		$µV_{RMS}$
			SE mode, R_L = 32 Ω, A_V = 2 dB		25		

7.7 Dissipation Ratings

PACKAGE	T_A ≤ 25°C	DERATING FACTOR	T_A = 70°C	T_A = 85°C
DGN	2.14 W(1)	17.1 mW/°C	1.37 W	1.11 W

(1) See *PowerPAD™ Thermally Enhanced Package* (SLMA002) for more information on the PowerPAD™ package. The thermal data was measured on a PCB layout based on the information in the section entitled *Texas Instruments Recommended Board for PowerPAD* on page 33 of that document.

Copyright © 2000–2016, Texas Instruments Incorporated

7.8 Typical Characteristics

Table 1. Table of Graphs

			FIGURE
	Supply ripple rejection ratio	vs Frequency	Figure 1, Figure 2
I_{DD}	Supply current	vs Supply voltage	Figure 3
P_O	Output power	vs Supply voltage	Figure 4, Figure 5
		vs Load resistance	Figure 6, Figure 7
THD+N	Total harmonic distortion plus noise	vs Frequency	Figure 8, Figure 9, Figure 10, Figure 11
		vs Output power	Figure 12, Figure 13, Figure 14, Figure 15, Figure 16, Figure 17
V_n	Output noise voltage	vs Frequency	Figure 18, Figure 19
	Closed loop gain and phase		Figure 20, Figure 21

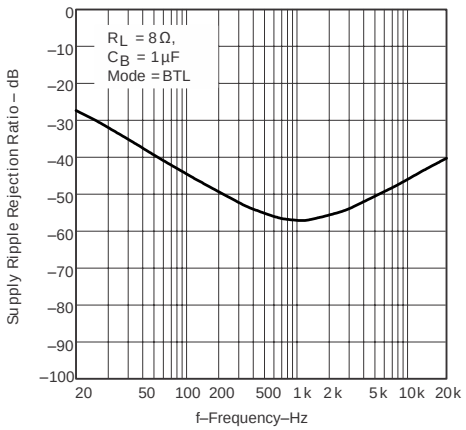

Figure 1. Supply Ripple Rejection Ratio vs Frequency

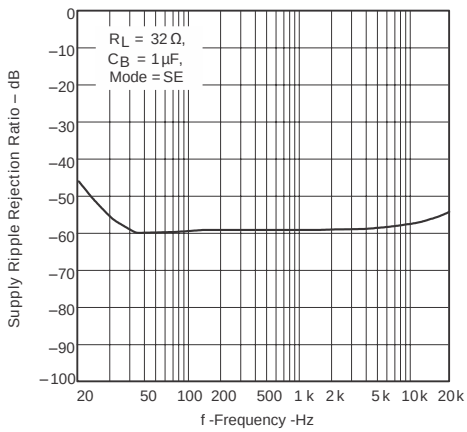

Figure 2. Supply Ripple Rejection Ratio vs Frequency

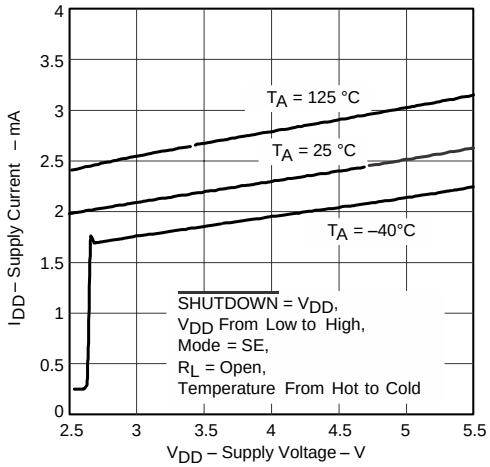

Figure 3. Supply Current vs Supply Voltage

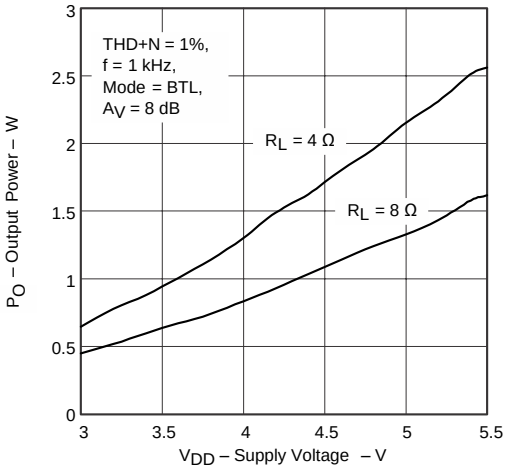

Figure 4. Output Power vs Supply Voltage

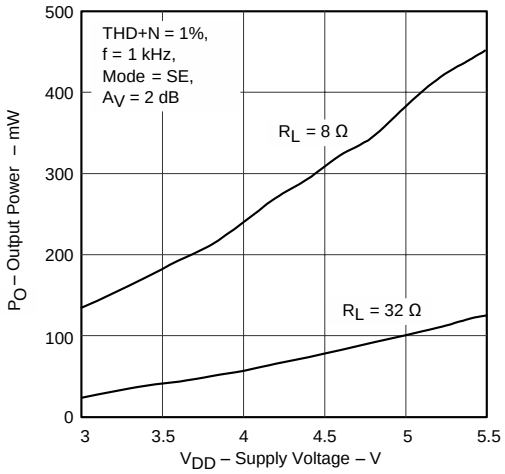

Figure 5. Output Power vs Supply Voltage

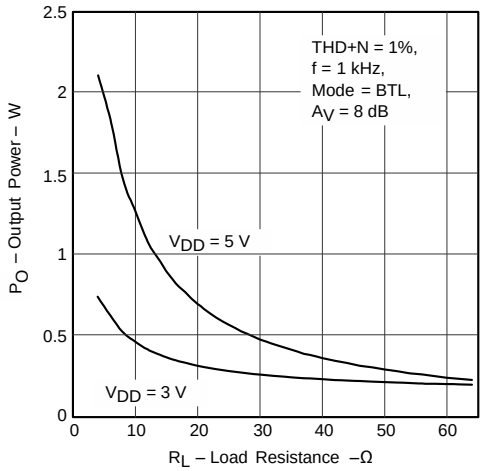

Figure 6. Output Power vs Load Resistance

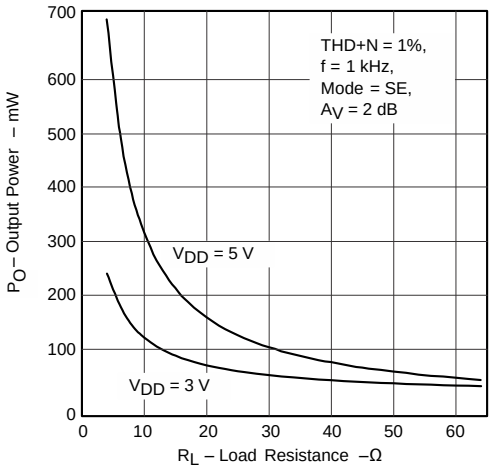

Figure 7. Output Power vs Load Resistance

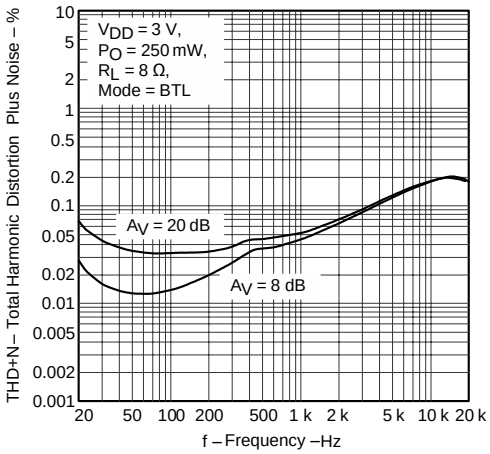

Figure 8. Total Harmonic Distortion Plus Noise vs Frequency

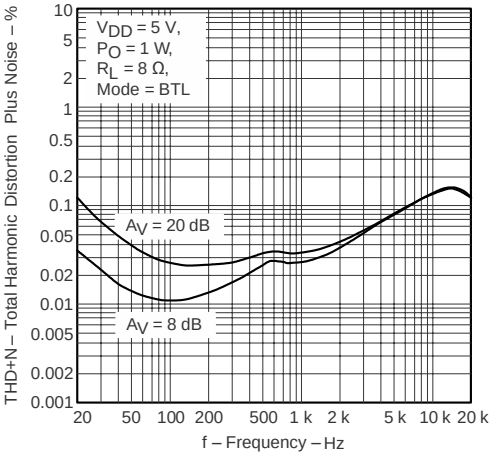

Figure 9. Total Harmonic Distortion Plus Noise vs Frequency

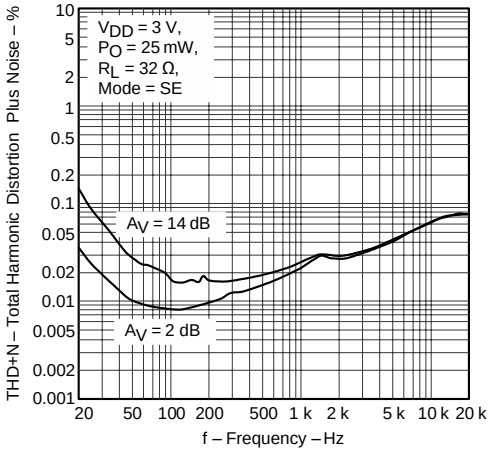

Figure 10. Total Harmonic Distortion Plus Noise vs Frequency

Copyright © 2000–2016, Texas Instruments Incorporated

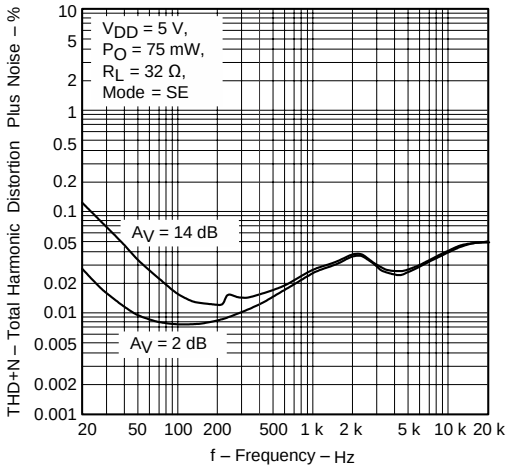

Figure 11. Total Harmonic Distortion Plus Noise vs Frequency

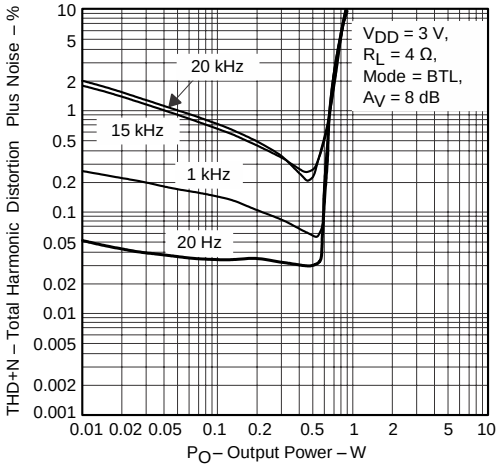

Figure 12. Total Harmonic Distortion Plus Noise vs Output Power

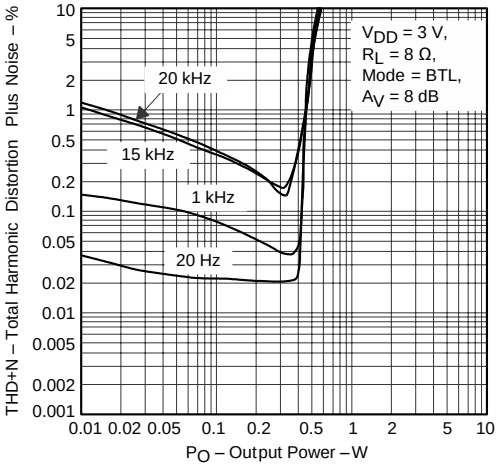

Figure 13. Total Harmonic Distortion Plus Noise vs Output Power

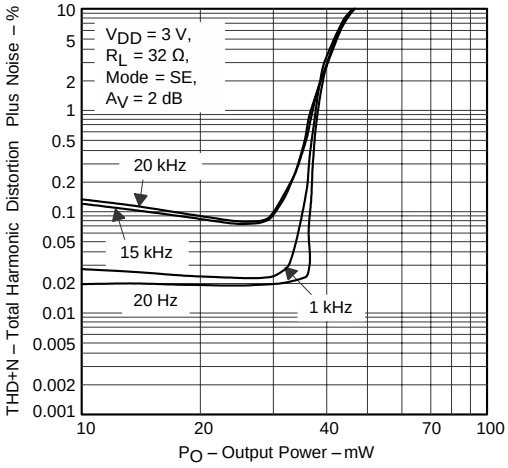

Figure 14. Total Harmonic Distortion Plus Noise vs Output Power

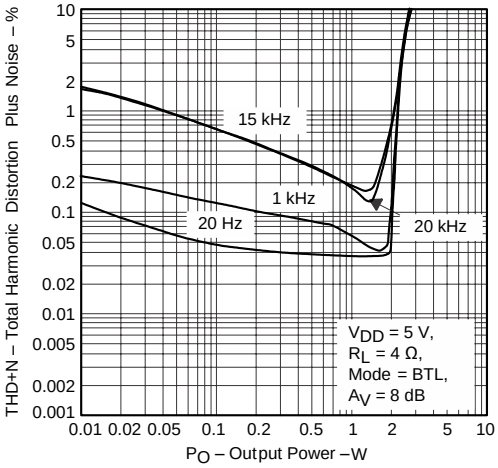

Figure 15. Total Harmonic Distortion Plus Noise vs Output Power

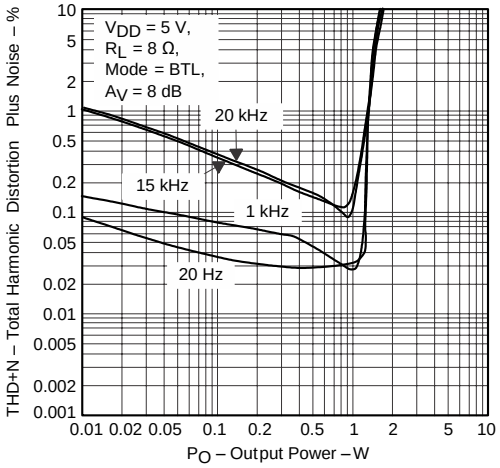

Figure 16. Total Harmonic Distortion Plus Noise vs Output Power

Copyright © 2000–2016, Texas Instruments Incorporated

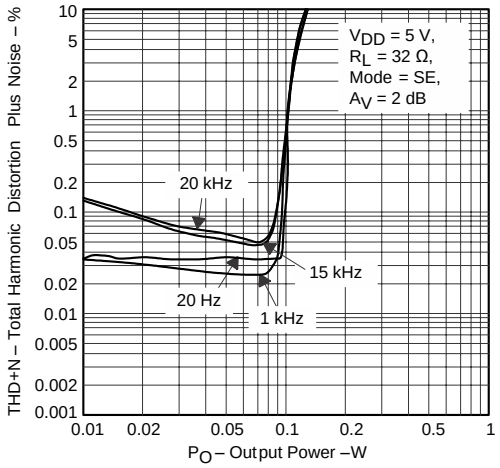

Figure 17. Total Harmonic Distortion Plus Noise vs Output Power

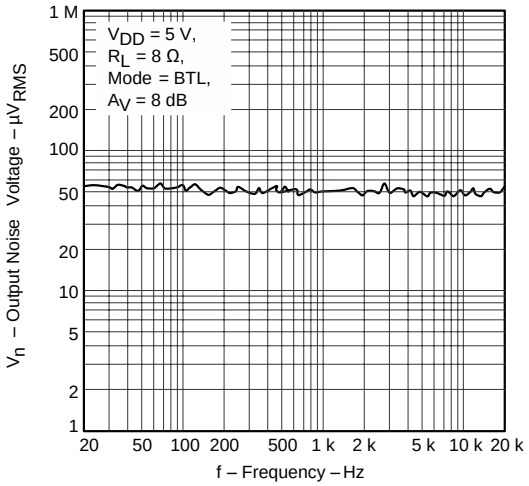

Figure 18. Output Noise Voltage vs Frequency

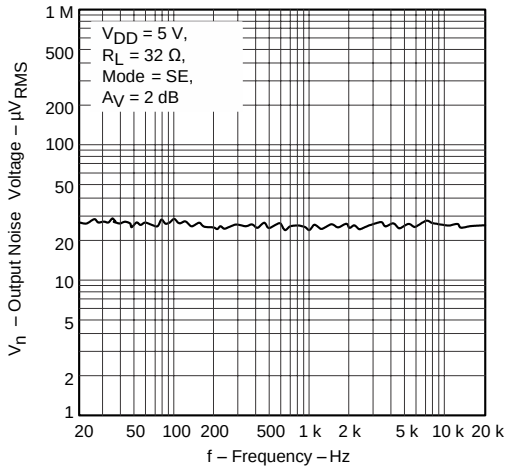

Figure 19. Output Noise Voltage vs Frequency

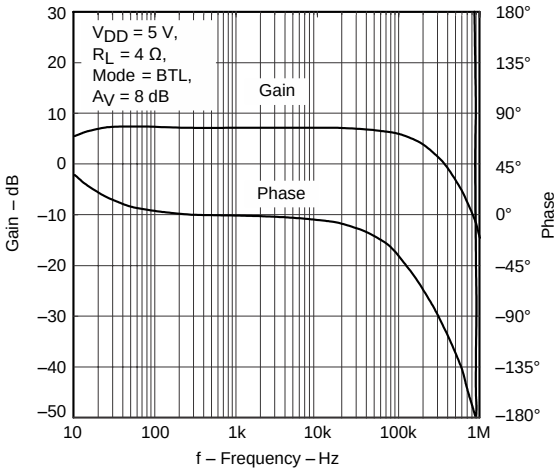

Figure 20. Closed Loop Response

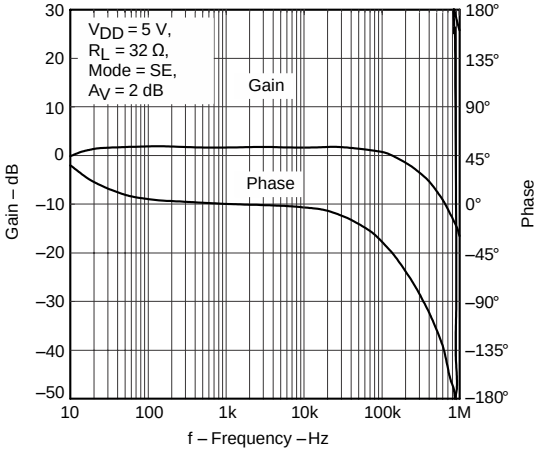

Figure 21. Closed Loop Response

Copyright © 2000–2016, Texas Instruments Incorporated

8 Parameter Measurement Information

8.1 Set-Up for Graphs

All parameters are measured according to the conditions described in *Specifications*. Figure 22 shows the setup used for the typical characteristics of the test device.

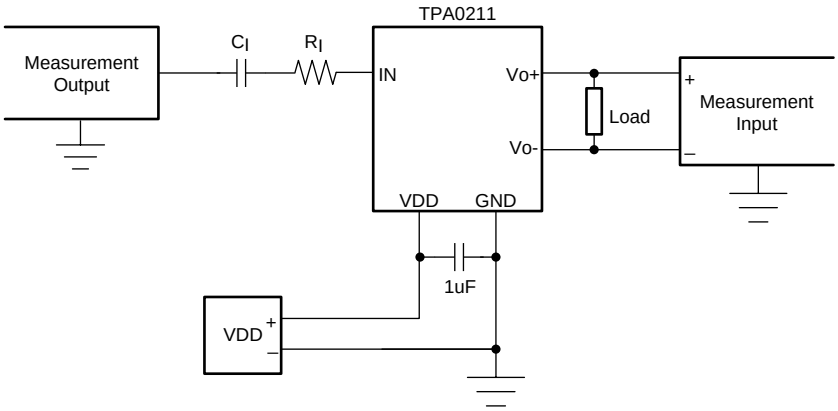

Copyright © 2016, Texas Instruments Incorporated

(1) All other measurements were taken with 1-µF CI (unless otherwise noted).

(2) A 33-µH inductor was placed in series with the load resistor to emulate a small speaker for efficiency measurements.

Figure 22. Test Set-Up for Graphs

9 Detailed Description

9.1 Overview

The TPA0211 device is a Class AB audio power amplifier designed to drive speakers in applications like small wireless communicators, cellphones, notebooks, and so forth. The TPA0211 can deliver 2 W (1% THD+N) of power into a 4-Ω speaker.

This device is available in the 8-pin thermally-enhanced MSOP-PowerPAD package (DGN) and operates over an ambient temperature range of –40°C to 85°C.

9.2 Functional Block Diagram

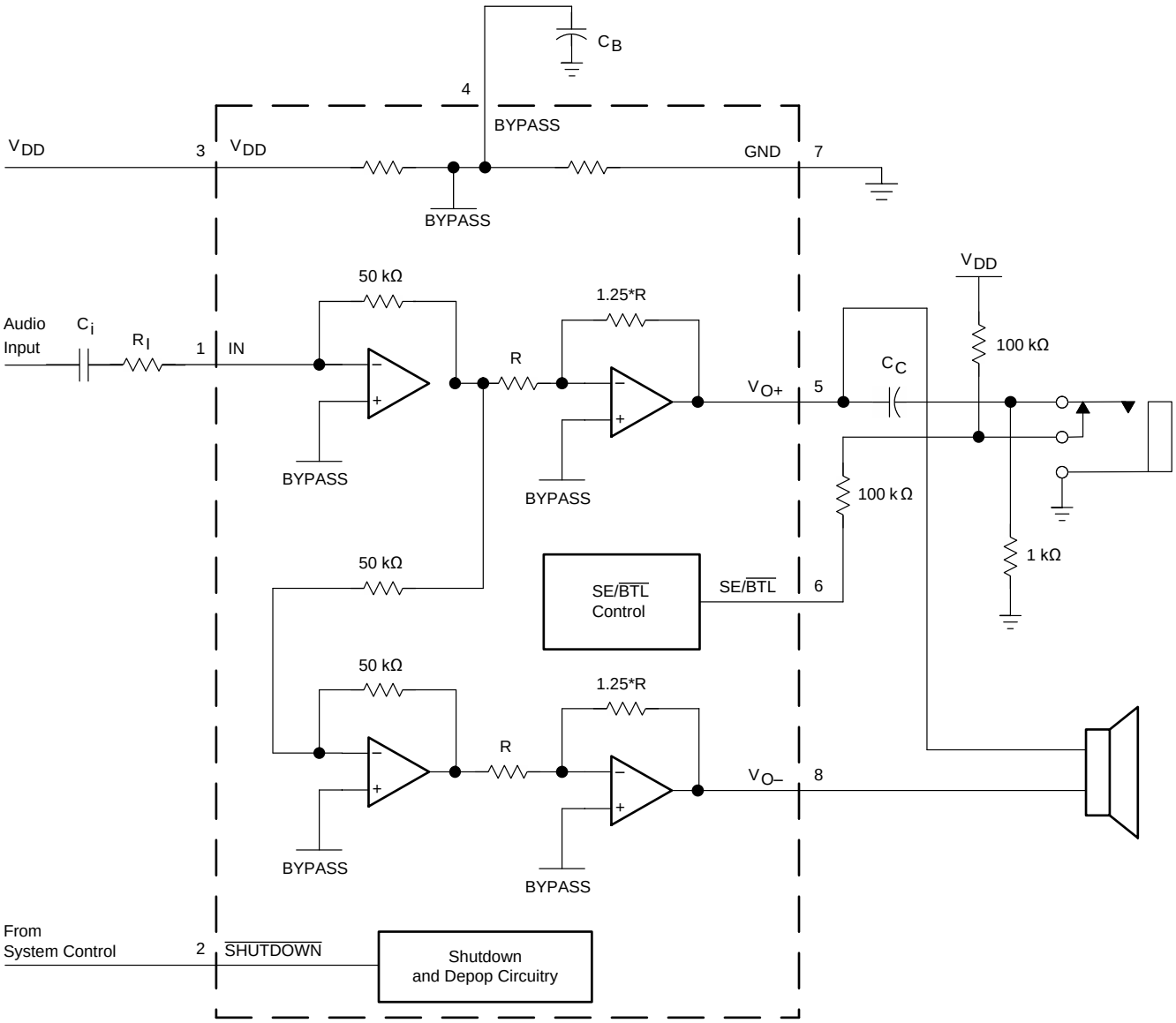

Copyright © 2000–2016, Texas Instruments Incorporated

9.3 Feature Description

9.3.1 Bridged-Tied Load Versus Single-Ended Mode

Figure 23 shows a Class-AB audio power amplifier (APA) in a BTL configuration. The TPA0211 BTL amplifier consists of two Class-AB amplifiers driving both ends of the load. There are several potential benefits to this differential drive configuration, but initially consider power to the load. The differential drive to the speaker means that as one side is slewing up, the other side is slewing down, and vice versa. This, in effect, doubles the voltage swing on the load as compared to a ground referenced load. Plugging 2 × $V_{O(PP)}$ into the power equation, where voltage is squared, yields 4 times the output power from the same supply rail and load impedance (see Equation 1 and).

$$V_{(RMS)} = \frac{V_{O(PP)}}{2\sqrt{2}}$$

$$\text{Power} = \frac{V_{(RMS)}^{2}}{R_L} \tag{1}$$

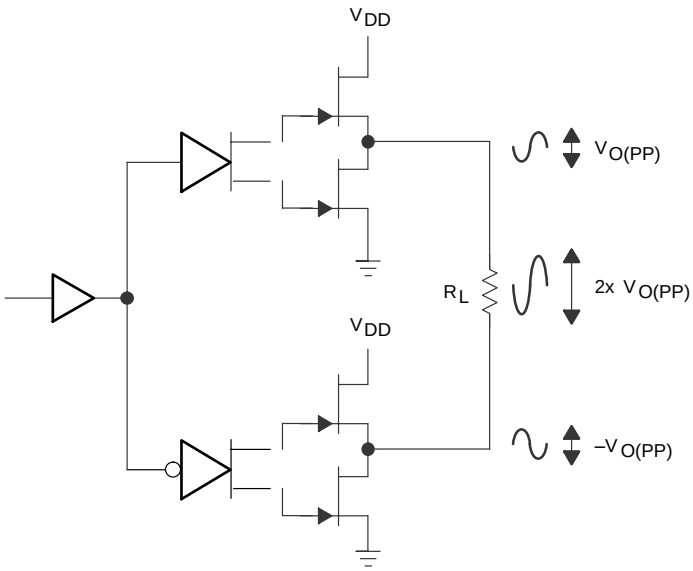

Figure 23. Bridge-Tied Load Configuration

In a typical computer sound channel operating at 5 V, bridging raises the power into an 8-Ω speaker from a singled-ended (SE, ground reference) limit of 250 mW to 1 W. In sound power, that is a 6-dB improvement — which is loudness that can be heard. In addition to increased power, there are frequency response concerns. Consider the single-supply SE configuration shown in Figure 24. A coupling capacitor is required to block the dc offset voltage from reaching the load. These capacitors can be quite large (approximately 33 µF to 1000 µF) so they tend to be expensive, heavy, occupy valuable PCB area, and have the additional drawback of limiting low-frequency performance of the system. This frequency limiting effect is due to the high pass filter network created with the speaker impedance and the coupling capacitance and is calculated with Equation 2.

$$f_c = \frac{1}{2\pi R_L C_{(C)}} \tag{2}$$

For example, a 68-µF capacitor with an 8-Ω speaker would attenuate low frequencies below 293 Hz. The BTL configuration cancels the dc offsets, which eliminates the need for the blocking capacitors. Low-frequency performance is then limited only by the input network and speaker response. Cost and PCB space are also minimized by eliminating the bulky coupling capacitor.

Feature Description (continued)

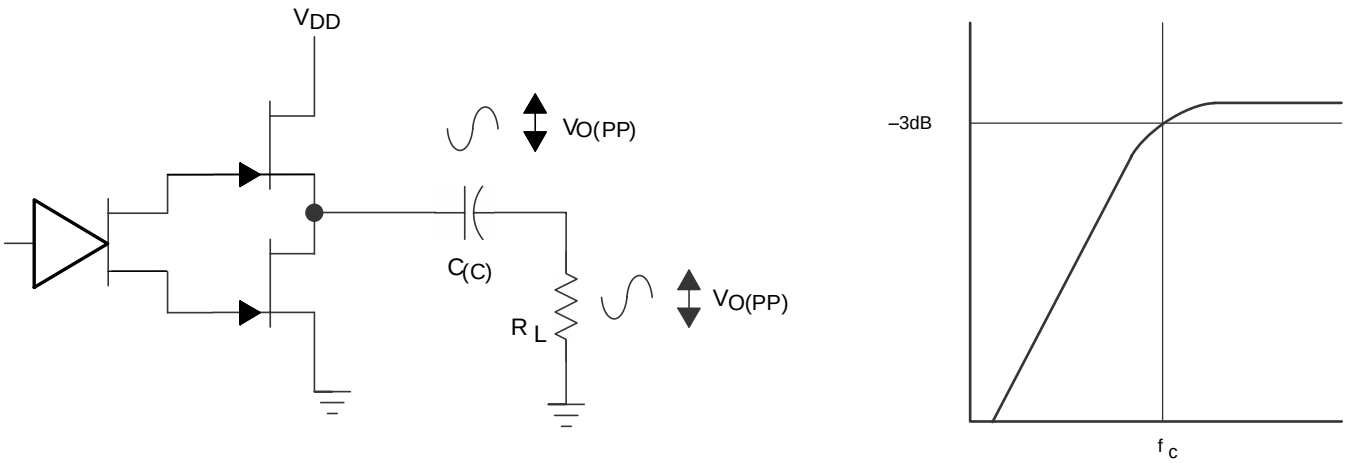

Figure 24. Single-Ended Configuration and Frequency Response

Increasing power to the load does carry a penalty of increased internal power dissipation. The increased dissipation is understandable considering that the BTL configuration produces 4 times the output power of the SE configuration. Internal dissipation versus output power is discussed further in *Crest Factor*.

9.3.2 Single-Ended Operation

In SE mode (see Figure 23 and Figure 24), the load is driven from one amplifier output (V_{O+}, terminal 5).

The amplifier switches to single-ended operation when the SE/$\overline{\text{BTL}}$ terminal is held high.

9.3.3 BTL Amplifier Efficiency

Class-AB amplifiers are inefficient. The primary cause of inefficiencies is the voltage drop across the output stage transistors. There are two components of the internal voltage drop. One is the headroom or dc voltage drop that varies inversely to output power. The second component is due to the sinewave nature of the output. The total voltage drop can be calculated by subtracting the RMS value of the output voltage from V_{DD}. The internal voltage drop multiplied by the RMS value of the supply current, I_{DD}rms, determines the internal power dissipation of the amplifier.

An easy-to-use equation to calculate efficiency starts out as being equal to the ratio of power from the power supply to the power delivered to the load. To accurately calculate the RMS and average values of power in the load and in the amplifier, the current and voltage waveform shapes must first be understood (see Figure 25).

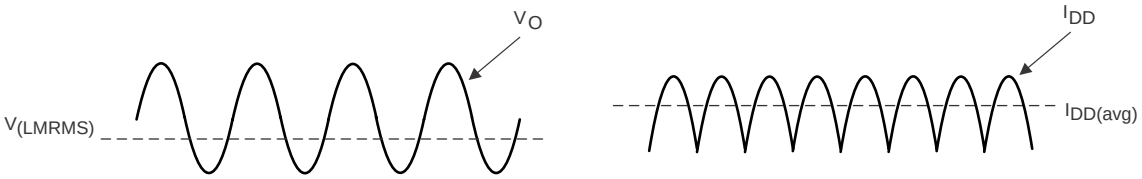

Figure 25. Voltage and Current Waveforms for BTL Amplifiers

Although the voltages and currents for SE and BTL are sinusoidal in the load, currents from the supply are very different between SE and BTL configurations. In an SE application the current waveform is a half-wave rectified shape, whereas in BTL it is a full-wave rectified waveform. This means RMS conversion factors are different. Keep in mind that for most of the waveform both the push and pull transistors are not on at the same time, which supports the fact that each amplifier in the BTL device only draws current from the supply for half the waveform. Equation 3 and Equation 4 are the basis for calculating amplifier efficiency.

Copyright © 2000–2016, Texas Instruments Incorporated

Feature Description (continued)

$$\text{Efficiency of a BTL amplifier} = \frac{P_L}{P_{SUP}}$$

where

$$PL = \frac{V_{LRMS}^2}{R_L}, \text{ and } V_{LRMS} = \frac{V_P}{\sqrt{2}}, \text{ therefore, } PL = \frac{V_P^2}{2R_L}$$

$$\text{and } P_{SUP} = V_{DD} I_{DD}avg \quad \text{and} \quad I_{DD}avg = \frac{1}{\pi}\int_0^{\pi} \frac{V_P}{R_L}\sin(t)\,dt = \frac{1}{\pi} \times \frac{V_P}{R_L}[\cos(t)]^{\pi}{}_0 = \frac{2V_P}{\pi R_L}$$

therefore,

$$P_{SUP} = \frac{2V_{DD}V_P}{\pi R_L}$$

substituting P_L and P_{SUP} into equation 9,

$$\text{Efficiency of a BTL amplifier} = \frac{\frac{V_P^2}{2\,R_L}}{\frac{2V_{DD}V_P}{\pi R_L}} = \frac{\pi V_P}{4V_{DD}}$$

where

$$V_P = \sqrt{2P_L R_L} \tag{3}$$

therefore,

$$\eta_{BTL} = \frac{\pi\sqrt{2P_L R_L}}{4V_{DD}}$$

P_L = Power delivered to load
P_{SUP} = Power drawn from power supply
V_{LRMS} = RMS voltage on BTL load
R_L = Load resistance
V_P = Peak voltage on BTL load
$I_{DD}avg$ = Average current drawn from the power supply
V_{DD} = Power supply voltage
η_{BTL} = Efficiency of a BTL amplifier (4)

Table 2 employs Equation 3 to calculate efficiencies for four different output power levels. Note that the efficiency of the amplifier is quite low for lower power levels and rises sharply as power to the load is increased resulting in a nearly flat internal power dissipation over the normal operating range. Note that the internal dissipation at full output power is less than in the half power range. Calculating the efficiency for a specific system is the key to proper power supply design.

Table 2. Efficiency vs Output Power in 5-V 8-Ω BTL Systems

OUTPUT POWER (W)	EFFICIENCY (%)	PEAK VOLTAGE (V)	INTERNAL DISSIPATION (W)
0.25	31.4	2	0.55
0.5	44.4	2.83	0.62
1	62.8	4	0.59
1.25	70.2	4.47 (1)	0.53

(1) High peak voltages cause the THD to increase.

A final point to remember about Class-AB amplifiers (either SE or BTL) is how to manipulate the terms in the efficiency equation to utmost advantage when possible. Note that in Equation 3, V_{DD} is in the denominator. This indicates that as V_{DD} goes down, efficiency goes up.

9.3.4 Gain Setting Via Input Resistance

The gain of the input stage is set by the user-selected input resistor and a 50-kΩ internal feedback resistor.

However, the power stage is internally configured with a gain of –1.25 V/V in SE mode, and –2.5 V/V in BTL mode. Thus, the feedback resistor (R_F) is effectively 62.5 kΩ in SE mode and 125 kΩ in BTL mode. Therefore, the overall gain can be calculated using Equation 5 and Equation 6.

$$A_V = \frac{-125\,k\Omega}{R_I} \quad \text{(BTL)} \tag{5}$$

$$A_V = \frac{-62.5\,k\Omega}{R_I} \quad \text{(SE)} \qquad \text{(SE)} \tag{6}$$

The –3 dB frequency can be calculated using Equation 7.

$$f_{-3db} = \frac{1}{2\pi R_I C_i} \tag{7}$$

If the filter must be more accurate, the value of the capacitor should be increased while the value of the resistor to ground should be decreased. In addition, the order of the filter could be increased.

9.3.5 Crest Factor

Class-AB power amplifiers dissipate a significant amount of heat in the package under normal operating conditions. A typical music CD requires 12 dB to 15 dB of dynamic range, or headroom above the average power output, to pass the loudest portions of the signal without distortion. In other words, music typically has a crest factor between 12 dB and 15 dB. When determining the optimal ambient operating temperature, the internal dissipated power at the average output power level must be used. The TPA0211 data sheet shows that when the TPA0211 is operating from a 5-V supply into a 4-Ω speaker 4-W peaks are available. Converting watts to dB with Equation 8.

$$P_{db} = 10\text{Log}\frac{P_W}{P_{ref}} = 10\text{Log}\frac{4\text{ W}}{1\text{ W}} = 6\text{ dB}$$

$$\begin{aligned}
&\text{Subtracting the headroom restriction to obtain the average listening level without distortion yields:}\\
&6\,\text{dB} - 15\text{ db} = -9\,\text{dB}\,(15 - \text{dB crest factor})\\
&6\,\text{dB} - 12\text{ db} = -6\,\text{dB}\,(12 - \text{dB crest factor})\\
&6\,\text{dB} - 9\text{ db} = -3\,\text{dB}\,(9 - \text{dB crest factor})\\
&6\,\text{dB} - 6\text{ db} = 0\,\text{dB}\,(6 - \text{dB crest factor})\\
&6\,\text{dB} - 3\text{ db} = 3\,\text{dB}\,(3 - \text{dB crest factor})
\end{aligned} \tag{8}$$

Converting dB back into watts with Equation 9.

$$\begin{aligned}
P_W &= 10^{PdB/10} \times P_{ref}\\
&= 63\text{ mW}\,(18 - \text{dB crest factor})\\
&= 125\text{ mW}\,(15 - \text{dB crest factor})\\
&= 250\text{ mW}\,(9 - \text{dB crest factor})\\
&= 500\text{ mW}\,(6 - \text{dB crest factor})\\
&= 1000\text{ mW}\,(3 - \text{dB crest factor})\\
&= 2000\text{ mW}\,(15 - \text{dB crest factor})
\end{aligned} \tag{9}$$

Copyright © 2000–2016, Texas Instruments Incorporated

This is valuable information to consider when attempting to estimate the heat dissipation requirements for the amplifier system. Comparing the absolute worst case, which is 2 W of continuous power output with a 3 dB crest factor, against 12 dB and 15 dB applications drastically affects maximum ambient temperature ratings for the system. Table 3 shows maximum ambient temperatures and TPA0211 internal power dissipation for various output-power levels.

Table 3. TPA0211 Power Rating, 5-V, 4–Ω, Mono

PEAK OUTPUT POWER (W)	AVERAGE OUTPUT POWER	POWER DISSIPATION (W)	MAXIMUM AMBIENT TEMPERATURE
4	2 W (3-dB crest factor)	1.7	–3°C
4	1000 mW (6-dB crest factor)	1.6	6°C
4	500 mW (9-dB crest factor)	1.4	24°C
4	250 mW (12-dB crest factor)	1.1	51°C
4	125 mW (15-dB crest factor)	0.8	78°C
4	63 mW (18-dB crest factor)	0.6	96°C

As a result, Equation 10 for calculating P_{Dmax} may be used for an 4-Ω application.

$$P_{Dmax} = \frac{2V^2_{DD}}{\pi^2 R_L} \tag{10}$$

However, in the case of a 4-Ω load, the P_{Dmax} occurs at a point well above the normal operating power level. The amplifier may therefore be operated at a higher ambient temperature than required by the P_{Dmax} formula for a 4-Ω load.

9.4 Device Functional Modes

9.4.1 Shutdown Mode

The TPA0211 amplifier can be put in shutdown mode when asserting shutdown pin to a logic LOW. While in shutdown mode, the device output stage is turned off and the current consumption is very low.

9.4.2 SE/$\overline{\text{BTL}}$ (Stereo/Mono) Operation

The ability of the TPA0211 to easily switch between mono BTL and stereo SE modes is one of its most important cost saving features. This feature eliminates the requirement for an additional headphone amplifier in applications where an internal speaker is driven in BTL mode but an external headphone must be accommodated. When SE/$\overline{\text{BTL}}$ is held high for SE mode, the V_{O-} output goes into a high impedance state while the V_{O+} output operates normally. When SE/$\overline{\text{BTL}}$ is held low, the V_{O-} output operates normally, placing the amplifier in BTL mode.

Device Functional Modes (continued)

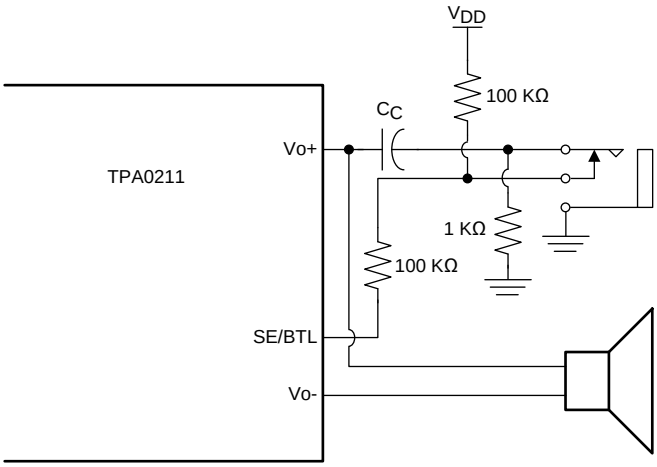

Copyright © 2016, Texas Instruments Incorporated

Figure 26. TPA0211 Resistor Divider Network Circuit

Using a readily available 1/8-in (3.5 mm) mono headphone jack, the control switch is closed when no plug is inserted. When closed, the 100-kΩ, 1-kΩ divider pulls the SE/BTL input low. When a plug is inserted, the 1-kΩ resistor is disconnected and the SE/BTL input is pulled high.

Copyright © 2000–2016, Texas Instruments Incorporated

10 Application and Implementation

NOTE

Information in the following applications sections is not part of the TI component specification, and TI does not warrant its accuracy or completeness. TI's customers are responsible for determining suitability of components for their purposes. Customers should validate and test their design implementation to confirm system functionality.

10.1 Application Information

These typical connection diagrams highlight the required external components and system level connections for proper operation of the device. Each of these configurations can be realized using the Evaluation Modules (EVMs) for the device. These flexible modules allow full evaluation of the device in the most common modes of operation. Any design variation can be supported by TI through schematic and layout reviews. Visit e2e.ti.com for design assistance and join the audio amplifier discussion forum for additional information.

10.2 Typical Application

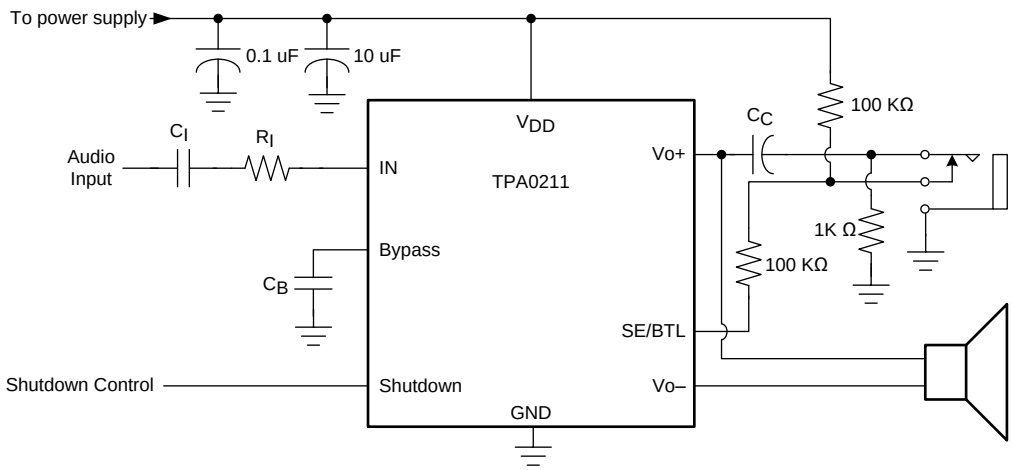

Copyright © 2016, Texas Instruments Incorporated

Figure 27. TPA0211 With SE/$\overline{\text{BTL}}$ Operation

10.2.1 Design Requirements

For this example, Table 4 lists the design parameters.

Table 4. Design Parameters

PARAMETER	VALUE
Power supply	5 V
Enable inputs	High > 2 V
	Low < 0.8 V
Speaker	8 Ω

10.2.2 Detailed Design Procedure

10.2.2.1 Surface Mount Capacitor

Low-ESR capacitors are recommended throughout this applications section. A real (as opposed to ideal) capacitor can be modeled simply as a resistor in series with an ideal capacitor. The voltage drop across this resistor minimizes the beneficial effects of the capacitor in the circuit. The lower the equivalent value of this resistance the more the real capacitor behaves like an ideal capacitor.

Temperature and applied DC voltage influence the actual capacitance of high-K materials. Table 5 shows the relationship between the different types of high-K materials and their associated tolerances, temperature coefficients, and temperature ranges. Notice that a capacitor made with X5R material can lose up to 15% of its capacitance within its working temperature range.

In an application, the working capacitance of components made with high-K materials is generally much lower than nominal capacitance. A worst case result with a typical X5R material might be –10% tolerance, –15% temperature effect, and –45% DC voltage effect at 50% of the rated voltage. This particular case would result in a working capacitance of 42% (0.9 × 0.85 × 0.55) of the nominal value.

Select high-K ceramic capacitors according to the following rules:

1. Use capacitors made of materials with temperature coefficients of X5R, X7R, or better.
2. Use capacitors with DC voltage ratings of at least twice the application voltage. Use minimum 10-V capacitors for this device.
3. Choose a capacitance value at least twice the nominal value calculated for the application. Multiply the nominal value by a factor of 2 for safety. If a 10-µF capacitor is required, use 20 µF.

The preceding rules and recommendations apply to capacitors used in connection with the device. This device cannot meet its performance specifications if the rules and recommendations are not followed.

Table 5. Typical Tolerance and Temperature Coefficient of Capacitance by Material

MATERIAL	TYPICAL TOLERANCE	TEMPERATURE	TEMPERATURE RANGE (°C)
COG/NOP	±5%	±30 ppm	–55 to 125
X7R	±10%	±15%	–55 to 125
X5R	80% to –20%	22% to –82%	–30 to 85

10.2.2.2 Input Capacitor, C_i

In the typical application an input capacitor, C_i, is required to allow the amplifier to bias the input signal to the proper dc level for optimum operation. In this case, C_i and the input resistance of the amplifier, R_I, form a high-pass filter with the corner frequency determined in Equation 11.

$$f_{c(highpass)} = \frac{1}{2\pi R_I C_i} \tag{11}$$

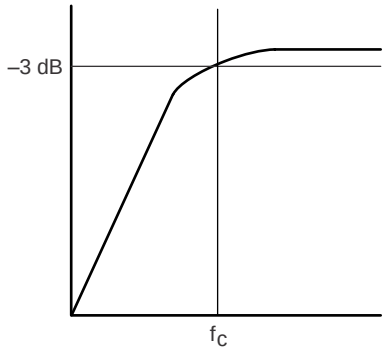

The value of C_i is important to consider as it directly affects the bass (low frequency) performance of the circuit. Consider the example where R_I is 10 kΩ and the specification calls for a flat bass response down to 40 Hz. Equation 6 is reconfigured as Equation 12.

$$C_i = \frac{1}{2\pi R_I f_c} \tag{12}$$

In this example, C_I is 0.4 µF so one would likely choose a value in the range of 0.47 µF to 1 µF. A further consideration for this capacitor is the leakage path from the input source through the input network (C_i) and the feedback network to the load. This leakage current creates a dc offset voltage at the input to the amplifier that reduces useful headroom, especially in high gain applications. For this reason a low-leakage tantalum or ceramic capacitor is the best choice. When polarized capacitors are used, the positive side of the capacitor should face the amplifier input in most applications as the dc level there is held at $V_{DD}/2$, which is likely higher than the source dc level. Note that it is important to confirm the capacitor polarity in the application.

Copyright © 2000–2016, Texas Instruments Incorporated

10.2.2.3 Power Supply Decoupling, $C_{(S)}$

The TPA0211 is a high-performance CMOS audio amplifier that requires adequate power supply decoupling to ensure the output total harmonic distortion (THD) is as low as possible. Power supply decoupling also prevents oscillations for long lead lengths between the amplifier and the speaker. The optimum decoupling is achieved by using two capacitors of different types that target different types of noise on the power supply leads. For higher frequency transients, spikes, or digital hash on the line, a good low equivalent-series-resistance (ESR) ceramic capacitor, typically 0.1 µF placed as close as possible to the device V_{DD} lead, works best. For filtering lower-frequency noise signals, TI recommends a larger aluminum electrolytic capacitor of 10 µF or greater placed near the audio power amplifier.

10.2.2.4 Midrail Bypass Capacitor, $C_{(BYP)}$

The midrail bypass capacitor, $C_{(BYP)}$, is the most critical capacitor and serves several important functions. During start-up or recovery from shutdown mode, $C_{(BYP)}$ determines the rate at which the amplifier starts up. The second function is to reduce noise produced by the power supply caused by coupling into the output drive signal. This noise is from the midrail generation circuit internal to the amplifier, which appears as degraded PSRR and THD+N.

Bypass capacitor, $C_{(BYP)}$, values of 0.47 µF to 1 µF ceramic or tantalum low-ESR capacitors are recommended for the best THD and noise performance.

10.2.2.5 Output Coupling Capacitor, $C_{(C)}$

In the typical single-supply SE configuration, an output coupling capacitor ($C_{(C)}$) is required to block the dc bias at the output of the amplifier thus preventing dc currents in the load. As with the input coupling capacitor, the output coupling capacitor and impedance of the load form a high-pass filter governed by Equation 13.

$$f_{c(high)} = \frac{1}{2\pi R_L C_{(c)}} \tag{13}$$

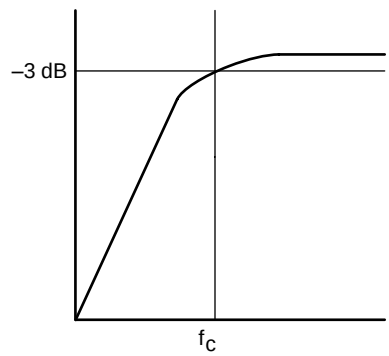

The main disadvantage, from a performance standpoint, is that the load impedances are typically small, which drives the low-frequency corner higher, degrading the bass response. Large values of $C_{(C)}$ are required to pass low frequencies into the load. Consider the example where a $C_{(C)}$ of 330 µF is chosen and loads vary from 3 Ω, 4 Ω, 8 Ω, 32 Ω, 10 kΩ, to 47 kΩ. Table 6 summarizes the frequency response characteristics of each configuration.

Table 6. Common Load Impedances vs Low Frequency Output Characteristics in SE Mode

R_L	$C_{(C)}$	LOWEST FREQUENCY
3 Ω	330 µF	161 Hz
4 Ω	330 µF	120 Hz
8 Ω	330 µF	60 Hz
32 Ω	330 µF	15 Hz
10,000 Ω	330 µF	0.05 Hz
47,000 Ω	330 µF	0.01 Hz

Copyright © 2000–2016, Texas Instruments Incorporated

As Table 6 indicates, most of the bass response is attenuated into a 4-Ω load, an 8-Ω load is adequate, headphone response is good, and drive into line level inputs (a home stereo for example) is exceptional.

Furthermore, the total amount of ripple current that must flow through the capacitor must be considered when choosing the component. As shown in the application circuit, one coupling capacitor must be in series with the mono loudspeaker for proper operation of the stereo-mono switching circuit. For a 4-Ω load, this capacitor must be able to handle about 700 mA of ripple current for a continuous output power of 2 W.

10.2.3 Application Curves

Table 7 lists the figures for the application curves.

Table 7. Table of Graphs

DESCRIPTION	FIGURE (1)
Supply current vs Supply voltage	Figure 3
Output power vs Load resistance	Figure 6
THD+N vs Frequency	Figure 8
THD+N vs Output power	Figure 12

(1) All figures are located in *Typical Characteristics*.

Copyright © 2000–2016, Texas Instruments Incorporated

11 Power Supply Recommendations

The TPA0211 is designed to operate from an input voltage supply range from 2.5 V to 5.5 V. Therefore, the output voltage range of the power supply must be within this range. The current capability of upper power must not exceed the maximum current limit of the power switch.

11.1 Power Supply Decoupling Capacitors

The TPA0211 requires adequate power supply decoupling to ensure a high efficiency operation with low total harmonic distortion (THD). Place a low equivalent-series-resistance (ESR) ceramic capacitor, typically 0.1 µF, within 2 mm of the VDD pin. This choice of capacitor and placement helps with higher frequency transients, spikes, or digital hash on the line. In addition to the 0.1-µF ceramic capacitor, is recommended to place a 2.2-µF to 10-µF capacitor on the VDD supply trace. This larger capacitor acts as a charge reservoir, providing energy faster than the board supply, thus helping to prevent any droop in the supply voltage.

12 Layout

12.1 Layout Guidelines

12.1.1 Component Placement

Keeping the external components very close to the TPA0211 to limit noise pickup is very important to limit noise pickup. Placing the decoupling capacitors as close as possible to the device is important for the performance of the class-AB amplifier.

12.2 Layout Example

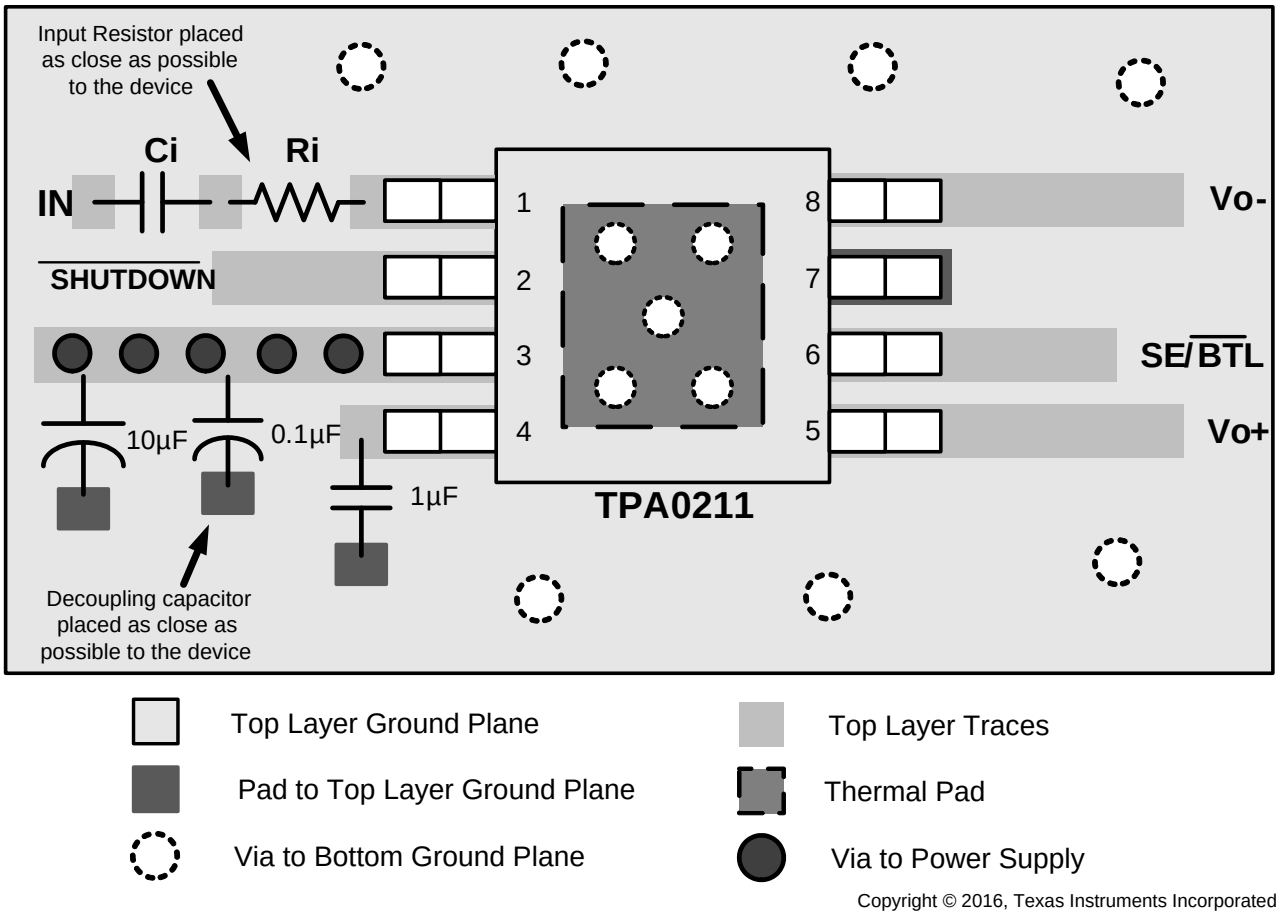

Copyright © 2016, Texas Instruments Incorporated

Figure 28. Layout Recommendation

12.3 Thermal Considerations

The maximum ambient temperature depends on the heat sinking ability of the PCB system. The derating factor for the DGN package is shown in the *Dissipation Ratings*. Converting this θ_{JA} can be done with Equation 14.

$$\Theta_{JA} = \frac{1}{\text{Derating Factor}} = \frac{1}{0.0171} = 58.48^{\circ}\text{C / W} \tag{14}$$

To calculate maximum ambient temperatures, first consider that the numbers from the dissipation graphs are per channel so the dissipated power needs to be doubled for two channel operation. Given $R_{\theta JA}$, the maximum allowable junction temperature, and the total internal dissipation, the maximum ambient temperature can be calculated with Equation 15. The maximum recommended junction temperature for the TPA0211 is 150°C.

$$T_A\text{Max} = T_J\text{Max} - \Theta_{JA}P_D = 150 - 58.48(0.8 \times 2) = 56^{\circ}\text{C}(15 - \text{dB crest factor}) \tag{15}$$

NOTE

Internal dissipation of 0.8 W is estimated for a 2-W system with 15-dB crest factor per channel.

Table 3 shows that for some applications no airflow is required to keep junction temperatures in the specified range. The TPA0211 is designed with thermal protection that turns the device off when the junction temperature surpasses 150°C to prevent damage to the IC. Table 3 was calculated for maximum listening volume without distortion. When the output level is reduced the numbers in the table change significantly. Also, using 8-Ω speakers dramatically increases the thermal performance by increasing amplifier efficiency.

Copyright © 2000–2016, Texas Instruments Incorporated

13 Device and Documentation Support

13.1 Documentation Support

13.1.1 Related Documentation

For related documentation see the following:

- *PowerPAD™ Thermally Enhanced Package* (SLMA002)
- Guidelines for Measuring Audio Power Amplifier Performance (SLOA068)
- TPA0211EVM - User Guide (SLOU092)

13.2 Receiving Notification of Documentation Updates

To receive notification of documentation updates, navigate to the device product folder on ti.com. In the upper right corner, click on *Alert me* to register and receive a weekly digest of any product information that has changed. For change details, review the revision history included in any revised document.

13.3 Community Resources

The following links connect to TI community resources. Linked contents are provided "AS IS" by the respective contributors. They do not constitute TI specifications and do not necessarily reflect TI's views; see TI's Terms of Use.

TI E2E™ Online Community ***TI's Engineer-to-Engineer (E2E) Community.*** Created to foster collaboration among engineers. At e2e.ti.com, you can ask questions, share knowledge, explore ideas and help solve problems with fellow engineers.

Design Support ***TI's Design Support*** Quickly find helpful E2E forums along with design support tools and contact information for technical support.

13.4 Trademarks

PowerPAD, E2E are trademarks of Texas Instruments.
All other trademarks are the property of their respective owners.

13.5 Electrostatic Discharge Caution

These devices have limited built-in ESD protection. The leads should be shorted together or the device placed in conductive foam during storage or handling to prevent electrostatic damage to the MOS gates.

13.6 Glossary

SLYZ022 — *TI Glossary*.

This glossary lists and explains terms, acronyms, and definitions.

14 Mechanical, Packaging, and Orderable Information

The following pages include mechanical, packaging, and orderable information. This information is the most current data available for the designated devices. This data is subject to change without notice and revision of this document. For browser-based versions of this data sheet, refer to the left-hand navigation.

PACKAGING INFORMATION

Orderable part number	Status (1)	Material type (2)	Package | Pins	Package qty | Carrier	RoHS (3)	Lead finish/ Ball material (4)	MSL rating/ Peak reflow (5)	Op temp (°C)	Part marking (6)
TPA0211DGN	Active	Production	HVSSOP (DGN) | 8	80 | TUBE	Yes	NIPDAU | NIPDAUAG	Level-1-260C-UNLIM	-40 to 85	AEG
TPA0211DGN.A	Active	Production	HVSSOP (DGN) | 8	80 | TUBE	Yes	NIPDAU	Level-1-260C-UNLIM	-40 to 85	AEG
TPA0211DGNG4	Active	Production	HVSSOP (DGN) | 8	80 | TUBE	Yes	NIPDAU	Level-1-260C-UNLIM	-40 to 85	AEG
TPA0211DGNR	Active	Production	HVSSOP (DGN) | 8	2500 | LARGE T&R	Yes	NIPDAU | NIPDAUAG	Level-1-260C-UNLIM	-40 to 85	AEG
TPA0211DGNR.A	Active	Production	HVSSOP (DGN) | 8	2500 | LARGE T&R	Yes	NIPDAU	Level-1-260C-UNLIM	-40 to 85	AEG

(1) **Status:** For more details on status, see our product life cycle.

(2) **Material type:** When designated, preproduction parts are prototypes/experimental devices, and are not yet approved or released for full production. Testing and final process, including without limitation quality assurance, reliability performance testing, and/or process qualification, may not yet be complete, and this item is subject to further changes or possible discontinuation. If available for ordering, purchases will be subject to an additional waiver at checkout, and are intended for early internal evaluation purposes only. These items are sold without warranties of any kind.

(3) **RoHS values:** Yes, No, RoHS Exempt. See the TI RoHS Statement for additional information and value definition.

(4) **Lead finish/Ball material:** Parts may have multiple material finish options. Finish options are separated by a vertical ruled line. Lead finish/Ball material values may wrap to two lines if the finish value exceeds the maximum column width.

(5) **MSL rating/Peak reflow:** The moisture sensitivity level ratings and peak solder (reflow) temperatures. In the event that a part has multiple moisture sensitivity ratings, only the lowest level per JEDEC standards is shown. Refer to the shipping label for the actual reflow temperature that will be used to mount the part to the printed circuit board.

(6) **Part marking:** There may be an additional marking, which relates to the logo, the lot trace code information, or the environmental category of the part.

Multiple part markings will be inside parentheses. Only one part marking contained in parentheses and separated by a "~" will appear on a part. If a line is indented then it is a continuation of the previous line and the two combined represent the entire part marking for that device.

Important Information and Disclaimer: The information provided on this page represents TI's knowledge and belief as of the date that it is provided. TI bases its knowledge and belief on information provided by third parties, and makes no representation or warranty as to the accuracy of such information. Efforts are underway to better integrate information from third parties. TI has taken and continues to take reasonable steps to provide representative and accurate information but may not have conducted destructive testing or chemical analysis on incoming materials and chemicals. TI and TI suppliers consider certain information to be proprietary, and thus CAS numbers and other limited information may not be available for release.

In no event shall TI's liability arising out of such information exceed the total purchase price of the TI part(s) at issue in this document sold by TI to Customer on an annual basis.

TAPE AND REEL INFORMATION

REEL DIMENSIONS

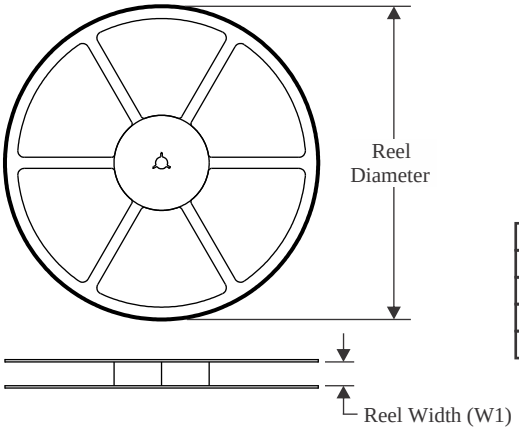

TAPE DIMENSIONS

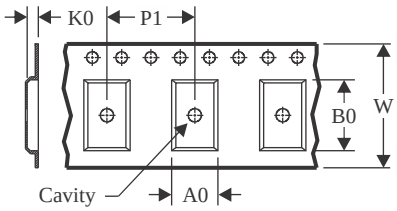

A0	Dimension designed to accommodate the component width
B0	Dimension designed to accommodate the component length
K0	Dimension designed to accommodate the component thickness
W	Overall width of the carrier tape
P1	Pitch between successive cavity centers

QUADRANT ASSIGNMENTS FOR PIN 1 ORIENTATION IN TAPE

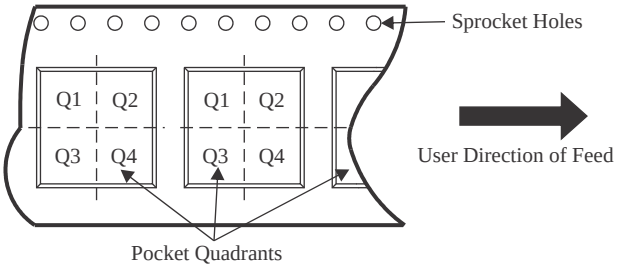

*All dimensions are nominal

Device	Package Type	Package Drawing	Pins	SPQ	Reel Diameter (mm)	Reel Width W1 (mm)	A0 (mm)	B0 (mm)	K0 (mm)	P1 (mm)	W (mm)	Pin1 Quadrant
TPA0211DGNR	HVSSOP	DGN	8	2500	330.0	12.4	5.3	3.4	1.4	8.0	12.0	Q1
TPA0211DGNR	HVSSOP	DGN	8	2500	330.0	12.4	5.3	3.4	1.4	8.0	12.0	Q1

TAPE AND REEL BOX DIMENSIONS

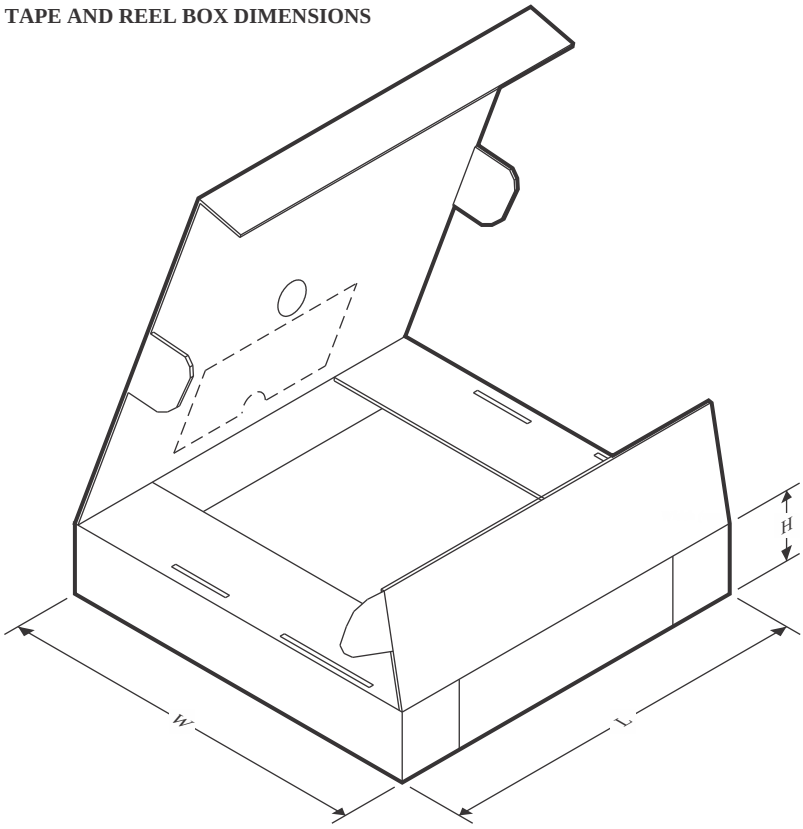

*All dimensions are nominal

Device	Package Type	Package Drawing	Pins	SPQ	Length (mm)	Width (mm)	Height (mm)
TPA0211DGNR	HVSSOP	DGN	8	2500	364.0	364.0	27.0
TPA0211DGNR	HVSSOP	DGN	8	2500	358.0	335.0	35.0

TUBE

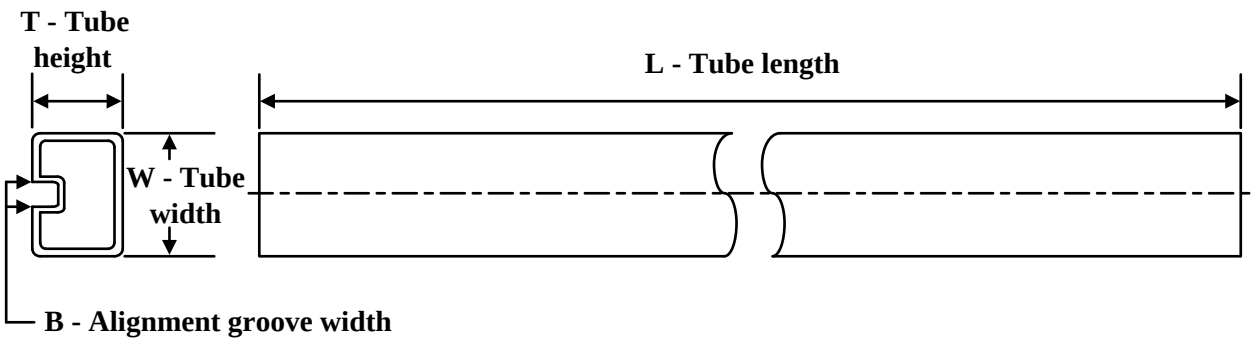

*All dimensions are nominal

Device	Package Name	Package Type	Pins	SPQ	L (mm)	W (mm)	T (µm)	B (mm)
TPA0211DGN	DGN	HVSSOP	8	80	274	6.2	2540	2.5
TPA0211DGN	DGN	HVSSOP	8	80	330	6.55	500	2.88
TPA0211DGN.A	DGN	HVSSOP	8	80	274	6.2	2540	2.5
TPA0211DGN.A	DGN	HVSSOP	8	80	330	6.55	500	2.88
TPA0211DGNG4	DGN	HVSSOP	8	80	274	6.2	2540	2.5
TPA0211DGNG4	DGN	HVSSOP	8	80	330	6.55	500	2.88

GENERIC PACKAGE VIEW

DGN 8

PowerPAD™ HVSSOP - 1.1 mm max height

3 x 3, 0.65 mm pitch

SMALL OUTLINE PACKAGE

This image is a representation of the package family, actual package may vary.
Refer to the product data sheet for package details.

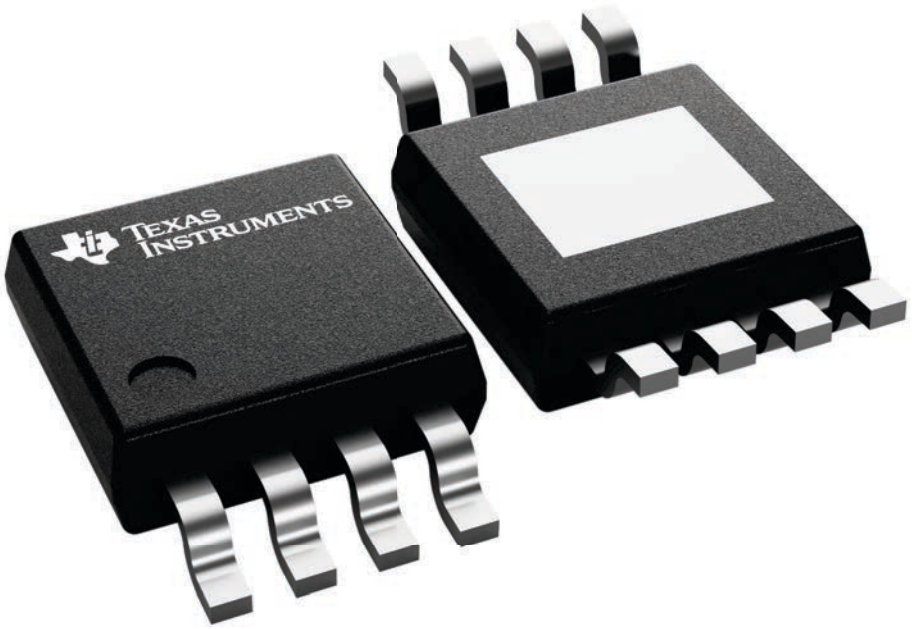

4225482/B

PACKAGE OUTLINE

DGN0008D

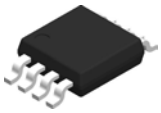

PowerPAD™ VSSOP - 1.1 mm max height

SMALL OUTLINE PACKAGE

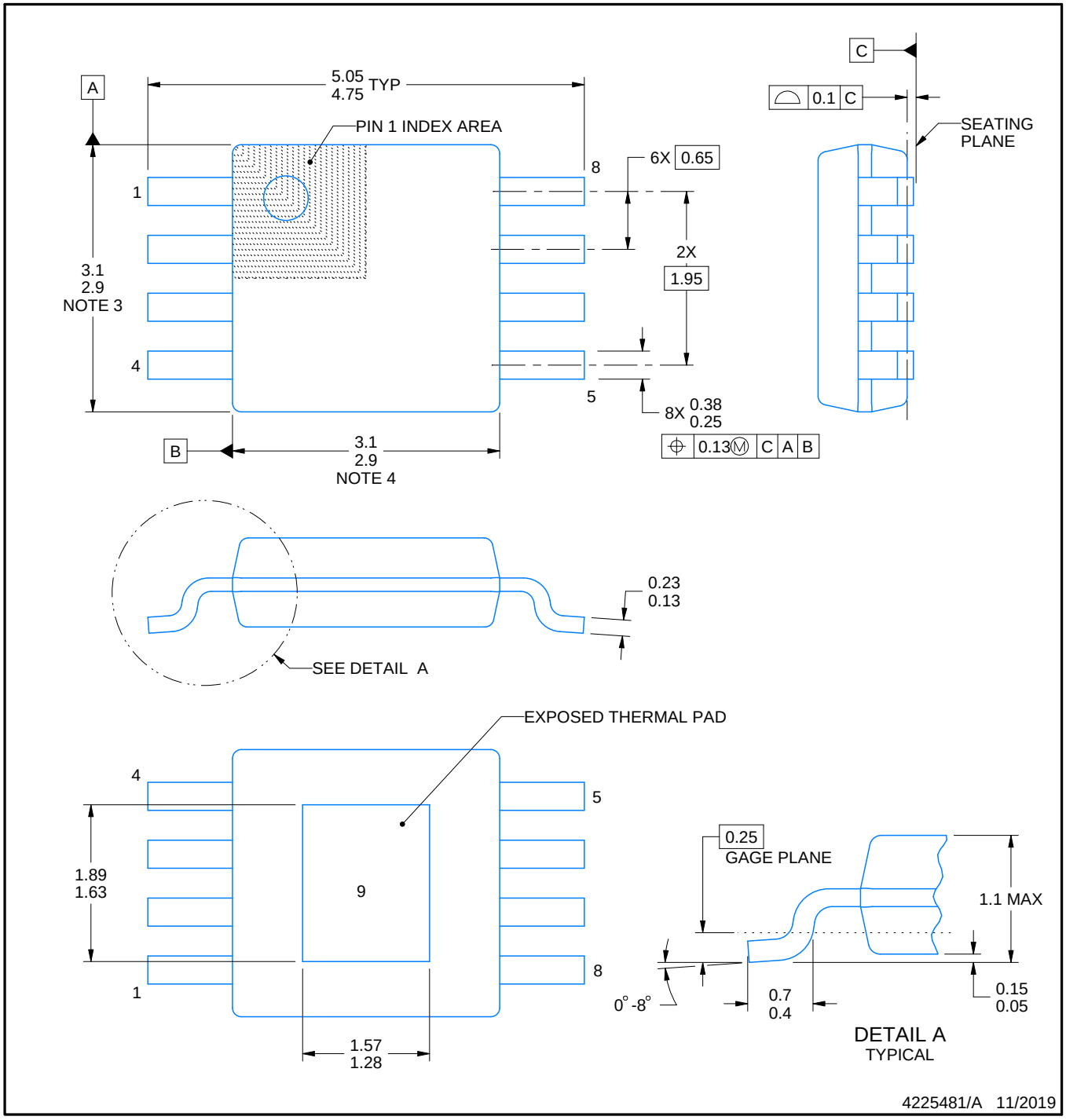

PowerPAD is a trademark of Texas Instruments.

NOTES:

1. All linear dimensions are in millimeters. Any dimensions in parenthesis are for reference only. Dimensioning and tolerancing per ASME Y14.5M.
2. This drawing is subject to change without notice.
3. This dimension does not include mold flash, protrusions, or gate burrs. Mold flash, protrusions, or gate burrs shall not exceed 0.15 mm per side.
4. This dimension does not include interlead flash. Interlead flash shall not exceed 0.25 mm per side.
5. Reference JEDEC registration MO-187.

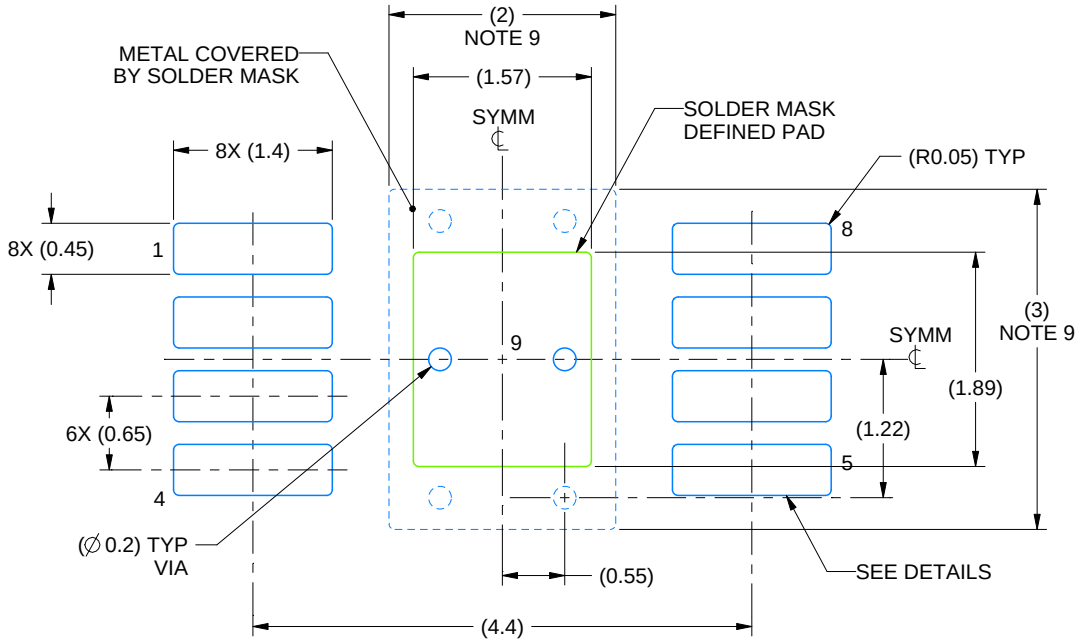

LAND PATTERN EXAMPLE
EXPOSED METAL SHOWN
SCALE: 15X

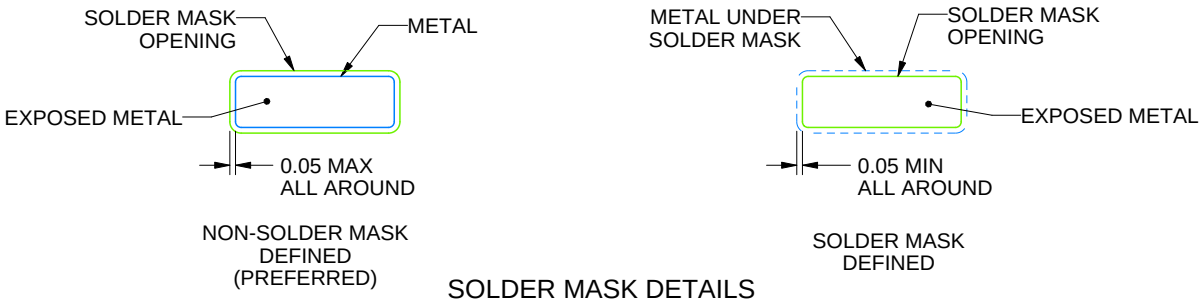

SOLDER MASK DETAILS

4225481/A 11/2019

NOTES: (continued)

6. Publication IPC-7351 may have alternate designs.
7. Solder mask tolerances between and around signal pads can vary based on board fabrication site.
8. Vias are optional depending on application, refer to device data sheet. If any vias are implemented, refer to their locations shown on this view. It is recommended that vias under paste be filled, plugged or tented.
9. Size of metal pad may vary due to creepage requirement.

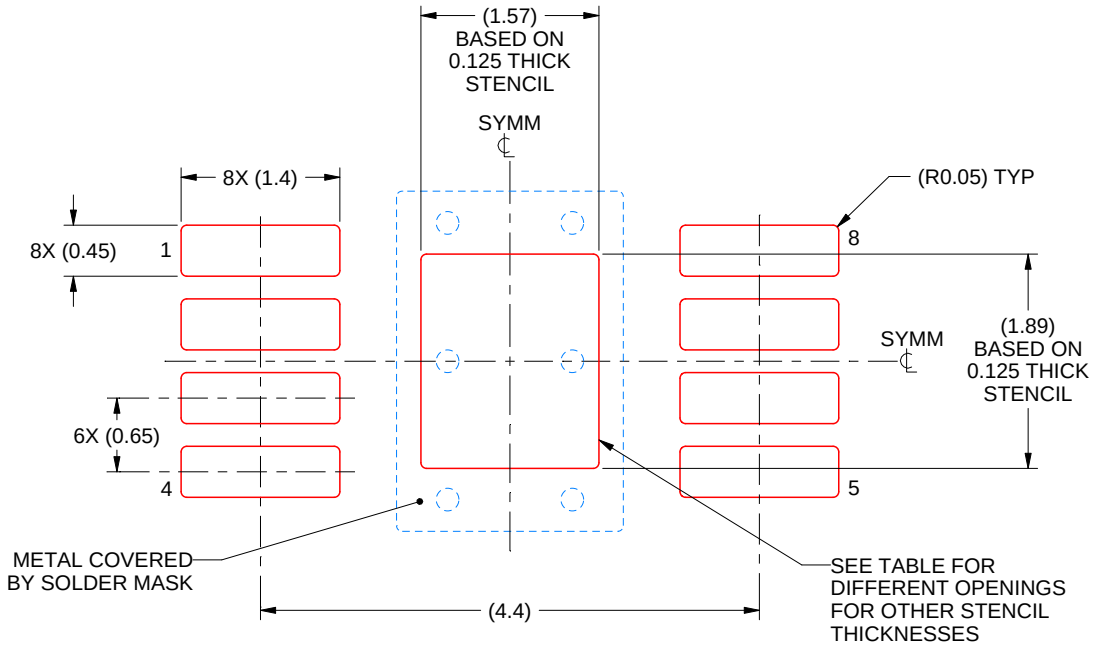

SOLDER PASTE EXAMPLE
EXPOSED PAD 9:
100% PRINTED SOLDER COVERAGE BY AREA
SCALE: 15X

STENCIL THICKNESS	SOLDER STENCIL OPENING
0.1	1.76 X 2.11
0.125	1.57 X 1.89 (SHOWN)
0.15	1.43 X 1.73
0.175	1.33 X 1.60

4225481/A 11/2019

NOTES: (continued)

10. Laser cutting apertures with trapezoidal walls and rounded corners may offer better paste release. IPC-7525 may have alternate design recommendations.
11. Board assembly site may have different recommendations for stencil design.

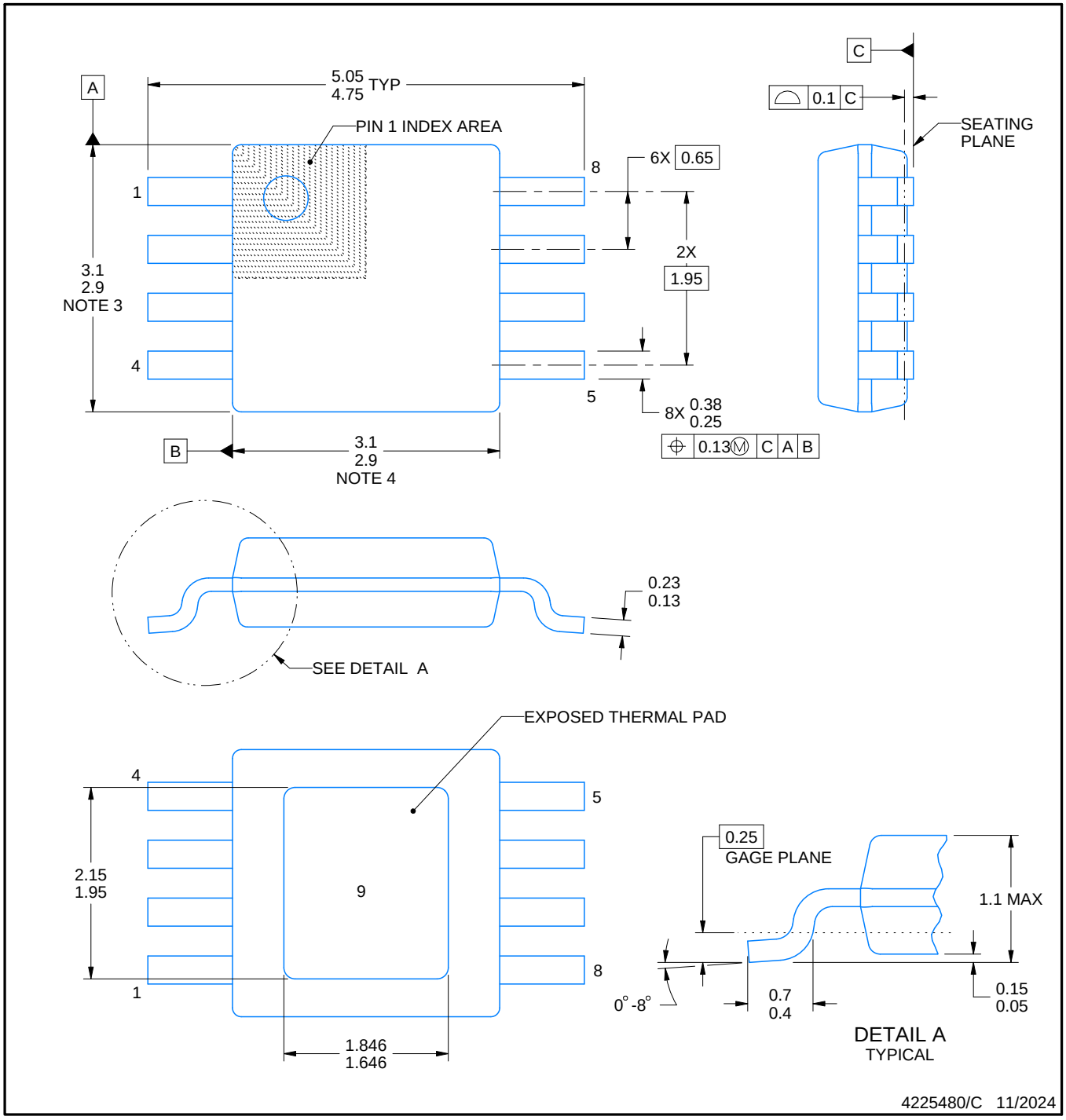

PowerPAD is a trademark of Texas Instruments.

NOTES:

1. All linear dimensions are in millimeters. Any dimensions in parenthesis are for reference only. Dimensioning and tolerancing per ASME Y14.5M.
2. This drawing is subject to change without notice.
3. This dimension does not include mold flash, protrusions, or gate burrs. Mold flash, protrusions, or gate burrs shall not exceed 0.15 mm per side.
4. This dimension does not include interlead flash. Interlead flash shall not exceed 0.25 mm per side.
5. Reference JEDEC registration MO-187.

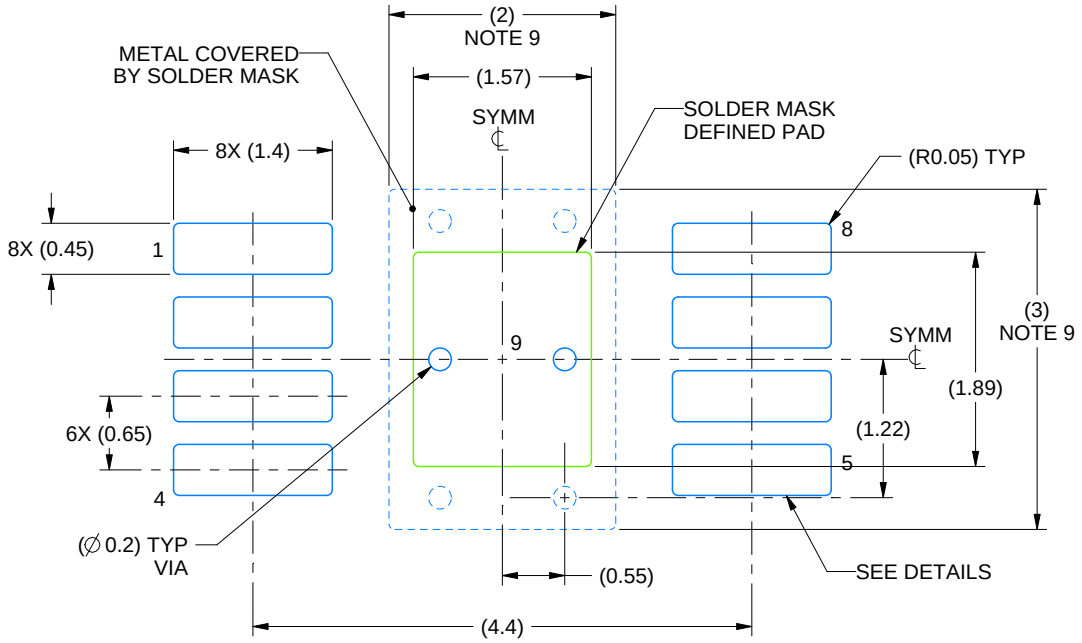

LAND PATTERN EXAMPLE
EXPOSED METAL SHOWN
SCALE: 15X

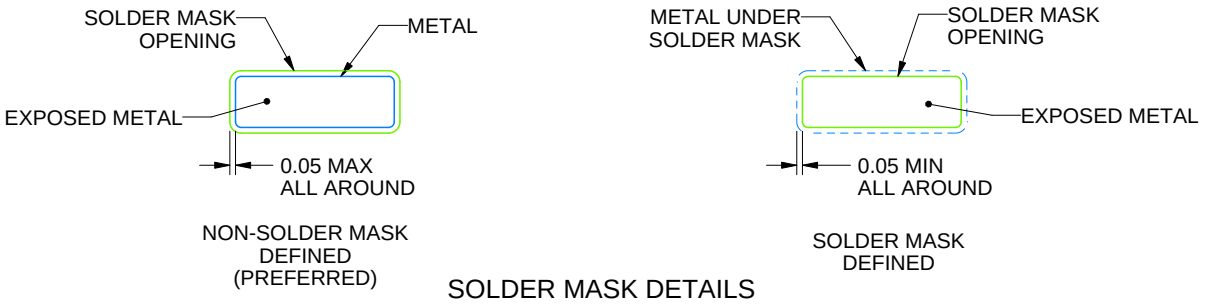

SOLDER MASK DETAILS

4225480/C 11/2024

NOTES: (continued)

6. Publication IPC-7351 may have alternate designs.
7. Solder mask tolerances between and around signal pads can vary based on board fabrication site.
8. Vias are optional depending on application, refer to device data sheet. If any vias are implemented, refer to their locations shown on this view. It is recommended that vias under paste be filled, plugged or tented.
9. Size of metal pad may vary due to creepage requirement.

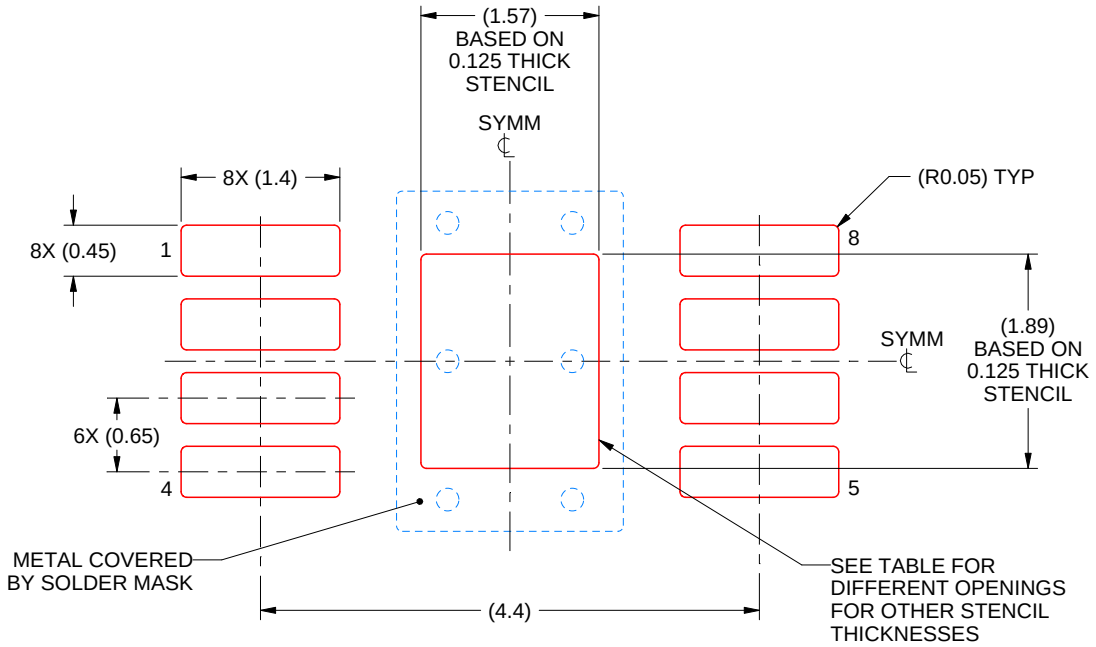

SOLDER PASTE EXAMPLE
EXPOSED PAD 9:
100% PRINTED SOLDER COVERAGE BY AREA
SCALE: 15X

STENCIL THICKNESS	SOLDER STENCIL OPENING
0.1	1.76 X 2.11
0.125	1.57 X 1.89 (SHOWN)
0.15	1.43 X 1.73
0.175	1.33 X 1.60

4225480/C 11/2024

NOTES: (continued)

10. Laser cutting apertures with trapezoidal walls and rounded corners may offer better paste release. IPC-7525 may have alternate design recommendations.
11. Board assembly site may have different recommendations for stencil design.

IMPORTANT NOTICE AND DISCLAIMER

TI PROVIDES TECHNICAL AND RELIABILITY DATA (INCLUDING DATASHEETS), DESIGN RESOURCES (INCLUDING REFERENCE DESIGNS), APPLICATION OR OTHER DESIGN ADVICE, WEB TOOLS, SAFETY INFORMATION, AND OTHER RESOURCES “AS IS” AND WITH ALL FAULTS, AND DISCLAIMS ALL WARRANTIES, EXPRESS AND IMPLIED, INCLUDING WITHOUT LIMITATION ANY IMPLIED WARRANTIES OF MERCHANTABILITY, FITNESS FOR A PARTICULAR PURPOSE OR NON-INFRINGEMENT OF THIRD PARTY INTELLECTUAL PROPERTY RIGHTS.

These resources are intended for skilled developers designing with TI products. You are solely responsible for (1) selecting the appropriate TI products for your application, (2) designing, validating and testing your application, and (3) ensuring your application meets applicable standards, and any other safety, security, regulatory or other requirements.

These resources are subject to change without notice. TI grants you permission to use these resources only for development of an application that uses the TI products described in the resource. Other reproduction and display of these resources is prohibited. No license is granted to any other TI intellectual property right or to any third party intellectual property right. TI disclaims responsibility for, and you fully indemnify TI and its representatives against any claims, damages, costs, losses, and liabilities arising out of your use of these resources.

TI’s products are provided subject to TI’s Terms of Sale, TI’s General Quality Guidelines, or other applicable terms available either on ti.com or provided in conjunction with such TI products. TI’s provision of these resources does not expand or otherwise alter TI’s applicable warranties or warranty disclaimers for TI products. Unless TI explicitly designates a product as custom or customer-specified, TI products are standard, catalog, general purpose devices.

TI objects to and rejects any additional or different terms you may propose.

Copyright © 2026, Texas Instruments Incorporated

Last updated 10/2025