TMUX6136 ±16.5V, Low Capacitance, Low-Leakage-Current, Precision, Dual SPDT Switch

1 Features

- Wide supply range: ±5V to ±16.5V (dual) or 10V to 16.5V (single)
- Latch-up performance meets 100mA per JESD78 Class II Level A on all pins
- Low on-capacitance: 5.5pF
- Low input leakage: 5pA
- Low charge injection: –0.4pC
- Rail-to-rail operation
- Low on-resistance: 120Ω
- Fast transition time: 66ns
- Break-before-make switching action
- SELx pin connectable to V_{DD} with integrated pull-down
- Logic levels: 2V to V_{DD}
- Low supply current: 17µA
- Human Body Model (HBM) ESD Protection: ± 2kV on all pins
- Industry-standard TSSOP package

2 Applications

- Factory automation and industrial process controls
- Programmable logic controllers (PLC)
- Analog input modules
- ATE test equipment
- Digital multimeters
- Battery monitoring systems

3 Description

The TMUX6136 is a complementary metal-oxide semiconductor (CMOS) analog switch containing two independently selectable SPDT switches. The devices work well with dual supplies (±5V to ±16.5V), a single supply (10V to 16.5V), or asymmetric supplies. The digital select pin (SELx) has transistor-transistor logic (TTL) compatible thresholds, ensuring TTL/ CMOS logic compatibility.

The TMUX6136 switches one of two inputs (Sx) to a common output (D), depending on the status of the SELx pins. Each switch conducts equally well in both directions in the ON position and supports input signal range up to the supplies. In the OFF condition, signal levels up to the supplies are blocked. All switches exhibit break-before-make (BBM) switching action.

The TMUX6136 is part of Texas Instruments precision switches and multiplexers family. The device has very low leakage current and charge injection, allowing them to be used in high-precision measurement applications. The device also provides excellent isolation by blocking signal levels up to the supplies when the switches are in the OFF position. Low supply current of 17µA enables usage in portable applications.

Package Information

PART NUMBER	PACKAGE(1)	BODY SIZE (NOM)
TMUX6136	PW (TSSOP, 16)	5.00mm × 4.40mm

(1) For all available packages, see the package option addendum at the end of the data sheet.

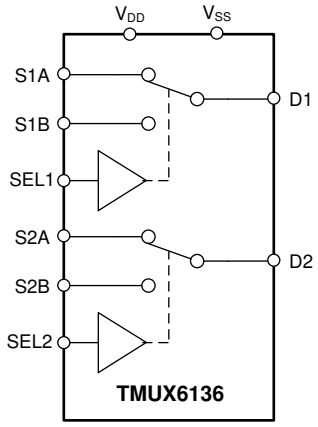

Copyright © 2018, Texas Instruments Incorporated

Simplified Schematic

An IMPORTANT NOTICE at the end of this data sheet addresses availability, warranty, changes, use in safety-critical applications, intellectual property matters and other important disclaimers. PRODUCTION DATA.

Table of Contents

1 Features....1
2 Applications....1
3 Description....1
4 Pin Configuration and Functions....3
5 Specifications....4
5.1 Absolute Maximum Ratings....4
5.2 ESD Ratings....4
5.3 Thermal Information....4
5.4 Recommended Operating Conditions....5
5.5 Electrical Characteristics (Dual Supplies: ±15V)....5
5.6 Switching Characteristics (Dual Supplies: ±15V)....6
5.7 Electrical Characteristics (Single Supply: 12V)....7
5.8 Switching Characteristics (Single Supply: 12V)....8
5.9 Typical Characteristics....9
6 Detailed Description....12
6.1 Overview....12
6.2 Functional Block Diagram....18
6.3 Feature Description....18
6.4 Device Functional Modes....19
7 Application and Implementation....20
7.1 Application Information....20
7.2 Typical Application....20
8 Power Supply Recommendations....22
9 Layout....23
9.1 Layout Guidelines....23
9.2 Layout Example....23
10 Device and Documentation Support....24
10.1 Documentation Support....24
10.2 Receiving Notification of Documentation Updates....24
10.3 Support Resources....24
10.4 Trademarks....24
10.5 Electrostatic Discharge Caution....24
10.6 Glossary....24
11 Revision History....24
12 Mechanical, Packaging, and Orderable Information....24

Copyright © 2025 Texas Instruments Incorporated

4 Pin Configuration and Functions

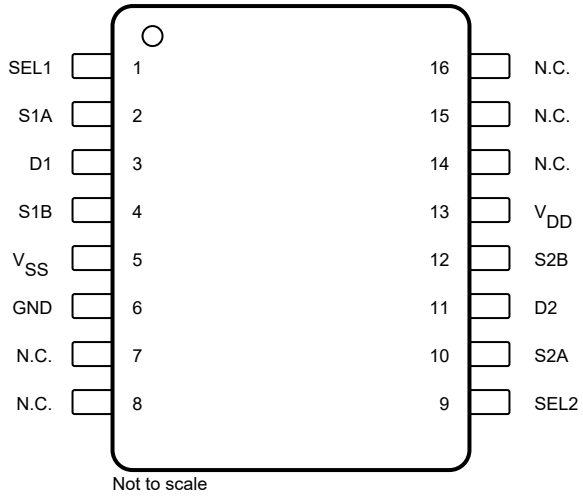

Figure 4-1. PW Package, 16-Pin TSSOP (Top View)

Table 4-1. Pin Functions

PIN		TYPE[(1)]	DESCRIPTION
NAME	NO.		
SEL1	1	I	Select line 0
S1A	2	I/O	Source pin 1A. Can be an input or output.
D1	3	I/O	Drain pin D1. Can be an input or output.
S1B	4	I/O	Source pin 1B. Can be an input or output.
V_{SS}	5	P	Negative power supply. This pin is the most negative power-supply potential. In single-supply applications, this pin can be connected to ground. For reliable operation, connect a decoupling capacitor ranging from 0.1µF to 10µF between V_{SS} and GND.
GND	6		Ground (0V) reference
N.C.	7, 8, 14, 15, 16	No Connect	No internal connection
SEL2	9	I	Select line 1
S2A	10	I/O	Source pin 2A. Can be an input or output.
D2	11	I/O	Drain pin D2. Can be an input or output.
S2B	12	I/O	Source pin 2B. Can be an input or output.
V_{DD}	13	P	Positive power supply. This pin is the most positive power-supply potential. For reliable operation, connect a decoupling capacitor ranging from 0.1µF to 10µF between V_{DD} and GND.

(1) I = input, O = output, P = power

Copyright © 2025 Texas Instruments Incorporated

5 Specifications

5.1 Absolute Maximum Ratings

over operating free-air temperature range (unless otherwise noted)[1]

		MIN	MAX	UNIT
V_{DD} to V_{SS}	Supply voltage		36	V
V_{DD} to GND		–0.3	18	V
V_{SS} to GND		–18	0.3	V
V_{DIG}	Digital input pin (SEL1, SEL2) voltage	GND –0.3	V_{DD}+0.3	V
I_{DIG}	Digital input pin (SEL1, SEL2) current	–30	30	mA
V_{ANA_IN}	Analog input pin (Sx) voltage	V_{SS}–0.3	V_{DD}+0.3	V
I_{ANA_IN}	Analog input pin (Sx) current	–30	30	mA
V_{ANA_OUT}	Analog output pin (D) voltage	V_{SS}–0.3	V_{DD}+0.3	V
I_{ANA_OUT}	Analog output pin (D) current	–30	30	mA
T_A	Ambient temperature	–55	140	°C
T_J	Junction temperature		150	°C
T_{stg}	Storage temperature	–65	150	°C

(1) Stresses beyond those listed under *Absolute Maximum Ratings* may cause permanent damage to the device. These are stress ratings only, which do not imply functional operation of the device at these or any other conditions beyond those indicated under *Recommended Operating Conditions*. Exposure to absolute maximum rated conditions for extended periods may affect device reliability.

5.2 ESD Ratings

			VALUE	UNIT
$V_{(ESD)}$	Electrostatic discharge	Human body model (HBM), per ANSI/ESDA/JEDEC JS-001, all pins[1]	±2000	V
		Charged device model (CDM), per JEDEC specification JESD22-C101, all pins[2]	±500	

(1) JEDEC document JEP155 states that 500V HBM allows safe manufacturing with a standard ESD control process.
(2) JEDEC document JEP157 states that 250V CDM allows safe manufacturing with a standard ESD control process.

5.3 Thermal Information

THERMAL METRIC[1]		TMUX6136 PW (TSSOP) 16 PINS	UNIT
$R_{\theta JA}$	Junction-to-ambient thermal resistance	111.0	°C/W
$R_{\theta JC(top)}$	Junction-to-case (top) thermal resistance	41.7	°C/W
$R_{\theta JB}$	Junction-to-board thermal resistance	57.2	°C/W
Ψ_{JT}	Junction-to-top characterization parameter	4.1	°C/W
Ψ_{JB}	Junction-to-board characterization parameter	56.6	°C/W
$R_{\theta JC(bot)}$	Junction-to-case (bottom) thermal resistance	N/A	°C/W

(1) For more information about traditional and new thermal metrics, see the Semiconductor and IC Package Thermal Metrics application note.

Copyright © 2025 Texas Instruments Incorporated

5.4 Recommended Operating Conditions

over operating free-air temperature range (unless otherwise noted)

		MIN	NOM	MAX	UNIT
V_{DD} to V_{SS} (1)	Power supply voltage differential	10		33	V
V_{DD} to GND	Positive power supply voltage (singlle supply, V_{SS} = 0V)	10		16.5	V
V_{DD} to GND	Positive power supply voltage (dual supply)	5		16.5	V
V_{SS} to GND	Negative power supply voltage (dual supply)	–16.5		–5	V
V_S (1)	Source pins voltage	V_{SS}		V_{DD}	V
V_D	Drain pin voltage	V_{SS}		V_{DD}	V
V_{DIG}	Digital input pin (SEL1, SEL2) voltage	0		V_{DD}	V
I_{CH}	Channel current (T_A = 25°C)	–25		25	mA
T_A	Ambient temperature	–40		125	°C

(1) V_{DD} and V_{SS} can be any value as long as 10V ≤ (V_{DD} – V_{SS}) ≤ 33V.

5.5 Electrical Characteristics (Dual Supplies: ±15V)

at T_A = 25°C, V_{DD} = 15V, and V_{SS} = -15V (unless otherwise noted)

PARAMETER		TEST CONDITIONS	TEST CONDITIONS	MIN	TYP	MAX	UNIT
ANALOG SWITCH							
V_A	Analog signal range		T_A = –40°C to +125°C	V_{SS}		V_{DD}	V
R_{ON}	On-resistance	V_S = 0V, I_S = 1mA			120	135	Ω
		V_S = ±10V, I_S = 1mA			140	160	Ω
			T_A = –40°C to +85°C			210	Ω
			T_A = –40°C to +125°C			245	Ω
ΔR_{ON}	On-resistance mismatch between channels	V_S = ±10V, I_S = 1mA			2.5	6	Ω
			T_A = –40°C to +85°C			9	Ω
			T_A = –40°C to +125°C			11	Ω
R_{ON_FLAT}	On-resistance flatness	V_S = –10V, 0V, +10V, I_S = 1mA			23	33	Ω
			T_A = –40°C to +85°C			35	Ω
			T_A = –40°C to +125°C			37	Ω
R_{ON_DRIFT}	On-resistance drift	V_S = 0V			0.42		%/°C
$I_{S(OFF)}$	Source off leakage current(1)	Switch state is off, V_S = +10V/ –10V, V_D = –10V/ + 10V		–0.05	0.005	0.05	nA
		Switch state is off, V_S = +10V/ –10V, V_D = –10V/ + 10V	T_A = –40°C to +85°C	–0.17		0.1	nA
		Switch state is off, V_S = +10V/ –10V, V_D = –10V/ + 10V	T_A = –40°C to +125°C	–1		0.25	nA
$I_{D(ON)}$	Drain on leakage current	Switch state is on, V_S = +10V/ –10V, V_D = –10V/ +10V		–0.06	0.008	0.06	nA
			T_A = –40°C to +85°C	–0.25		0.15	nA
			T_A = –40°C to +125°C	–1.6		0.4	nA
DIGITAL INPUT (SELx pins)							
V_{IH}	Logic voltage high			2			V
V_{IL}	Logic voltage low					0.8	V

5.5 Electrical Characteristics (Dual Supplies: ±15V) (continued)

at T_A = 25°C, V_{DD} = 15V, and V_{SS} = -15V (unless otherwise noted)

PARAMETER		TEST CONDITIONS	TEST CONDITIONS	MIN	TYP	MAX	UNIT
$R_{PD(SELx)}$	Pull-down resistance on SELx pins				6		MΩ
POWER SUPPLY							
I_{DD}	V_{DD} supply current	V_A = 0V or 3.3V, V_S = 0V			17	21	µA
			T_A = –40°C to +85°C			22	µA
			T_A = –40°C to +125°C			23	µA
I_{SS}	V_{SS} supply current	V_A = 0V or 3.3V, V_S = 0V			8	10	µA
			T_A = –40°C to +85°C			11	µA
			T_A = –40°C to +125°C			12	µA

(1) When V_S is positive, V_D is negative, and vice versa.

5.6 Switching Characteristics (Dual Supplies: ±15V)

at T_A = 25°C, V_{DD} = 15V, and V_{SS} = -15V (unless otherwise noted)

PARAMETER		TEST CONDITIONS	MIN	TYP	MAX	UNIT
t_{TRAN}	Transition time	V_S = 10V, R_L = 300Ω , C_L = 35pF		66	78	ns
		V_S = 10V, R_L = 300Ω , C_L = 35pF, T_A = –40°C to +85°C			107	ns
		V_S = 10V, R_L = 300Ω , C_L = 35pF, T_A = –40°C to +125°C			117	ns
tBBM	Break-before-make time delay	V_S = 10V, R_L = 300Ω , C_L = 35pF, T_A = –40°C to +125°C	20	40		ns
Q_J	Charge injection	V_S = 0V, R_S = 0Ω , C_L = 1nF		–0.4		pC
O_{ISO}	Off-isolation	R_L = 50Ω , C_L = 5pF, f = 1MHz		–85		dB
X_{TALK}	Channel-to-channel crosstalk	R_L = 50Ω , C_L = 5pF, f = 1MHz (Inter-channel: S1x and S2x)		–105		dB
		R_L = 50Ω , C_L = 5pF, f = 1MHz (Intra-channel: SxA and SxB)		–92		dB
I_L	Insertion loss	R_L = 50Ω , C_L = 5pF, f = 1MHz		–7		dB
ACPSRR	AC Power Supply Rejection Ratio	R_L = 10kΩ , C_L = 5pF, V_{PP}= 0.62V on V_{DD}, f= 1MHz		–59		dB
		R_L = 10kΩ , C_L = 5pF, V_{PP}= 0.62V on V_{SS}, f= 1MHz		–59		dB
BW	-3dB Bandwidth	R_L = 50Ω , C_L = 5pF		670		MHz
THD	Total harmonic distortion + noise	R_L = 10kΩ , C_L = 5pF, f= 20Hz to 20kHz		0.08		%
C_{IN}	Digital input capacitance	V_{IN} = 0V or V_{DD}		1.5		pF
$C_{S(OFF)}$	Source off-capacitance	V_S = 0V, f = 1MHz		2.4	3.3	pF
$C_{S(ON)}$, $C_{D(ON)}$	Source and drain on-capacitance	V_S = 0V, f = 1MHz		5.5	7.5	pF

Copyright © 2025 Texas Instruments Incorporated

5.7 Electrical Characteristics (Single Supply: 12V)

at T_A = 25°C, V_{DD} = 12V, and V_{SS} = 0V (unless otherwise noted)

PARAMETER		TEST CONDITIONS		MIN	TYP	MAX	UNIT
ANALOG SWITCH							
V_A	Analog signal range			V_{SS}		V_{DD}	V
R_{ON}	On-resistance	V_S = 10V, I_S = 1mA			235	345	Ω
			T_A = –40°C to +85°C			400	Ω
			T_A = –40°C to +125°C			440	Ω
ΔR_{ON}	On-resistance mismatch between channels	V_S = 10V, I_S = 1mA			4	12	Ω
			T_A = –40°C to +85°C			19	Ω
			T_A = –40°C to +125°C			23	Ω
R_{ON_DRIFT}	On-resistance drift	V_S = 0V			0.47		%/°C
$I_{S(OFF)}$	Source off leakage current[(1)]	Switch state is off, V_S = 10V/ 1V, V_D = 1V/ 10V		–0.03	0.005	0.03	nA
			T_A = –40°C to +85°C	–0.1		0.07	nA
			T_A = –40°C to +125°C	–0.8		0.2	nA
$I_{D(ON)}$	Drain on leakage current	Switch state is on, V_S = floating, V_D = 1V/ 10V		–0.04	0.01	0.04	nA
			T_A = –40°C to +85°C	–0.16		0.09	nA
			T_A = –40°C to +125°C	–1.2		0.3	nA
DIGITAL INPUT (SELx pins)							
V_{IH}	Logic voltage high			2			V
V_{IL}	Logic voltage low					0.8	V
$R_{PD(SELx)}$	Pull-down resistance on SELx pins				6		MΩ
POWER SUPPLY							
I_{DD}	V_{DD} supply current	V_A = 0V or 3.3V, V_S = 0V			13	16	µA
			T_A = –40°C to +85°C			17	µA
			T_A = –40°C to +125°C			18	µA

(1) When V_S is positive, V_D is negative, and vice versa.

Copyright © 2025 Texas Instruments Incorporated

5.8 Switching Characteristics (Single Supply: 12V)

at T_A = 25°C, V_{DD} = 12V, and V_{SS} = 0V (unless otherwise noted)

PARAMETER		TEST CONDITIONS	MIN	TYP	MAX	UNIT
t_{TRAN}	Transition time	V_S = 8V, R_L = 300Ω , C_L = 35pF		72	84	ns
		V_S = 8V, R_L = 300Ω , C_L = 35pF, T_A = –40°C to +85°C			117	ns
		V_S = 8V, R_L = 300Ω , C_L = 35pF, T_A = –40°C to +125°C			128	ns
t_{BBM}	Break-before-make time delay	V_S = 8V, R_L = 300Ω , C_L = 35pF, T_A = –40°C to +125°C	20	40		ns
Q_J	Charge injection	V_S = 6V, R_S = 0Ω , C_L = 1nF		–0.7		pC
O_{ISO}	Off-isolation	R_L = 50Ω , C_L = 5pF, f = 1MHz		-85		dB
X_{TALK}	Channel-to-channel crosstalk	R_L = 50Ω , C_L = 5pF, f = 1MHz (Inter-channel: S1x and S2x)		–110		dB
		R_L = 50Ω , C_L = 5pF, f = 1MHz (Intra-channel: SxA and SxB)		–95		dB
I_L	Insertion loss	R_L = 50Ω , C_L = 5pF, f = 1MHz		–13		dB
ACPSRR	AC Power Supply Rejection Ratio	R_L= 10kΩ , C_L = 5pF, V_{PP}= 0.62V, f= 1MHz		–58		dB
BW	-3dB Bandwidth	R_L = 50Ω , C_L = 5pF		650		MHz
C_{IN}	Digital input capacitance	V_{IN} = 0V or V_{DD}		1.7		pF
$C_{S(OFF)}$	Source off-capacitance	V_S = 6V, f = 1MHz		2.6	3.7	pF
$C_{S(ON)}$, $C_{D(ON)}$	Source and drain on-capacitance	V_S = 6V, f = 1MHz		6.3	8.5	pF

Copyright © 2025 Texas Instruments Incorporated

5.9 Typical Characteristics

at T_A = 25°C, V_{DD} = 15V, and V_{SS} = –15V (unless otherwise noted)

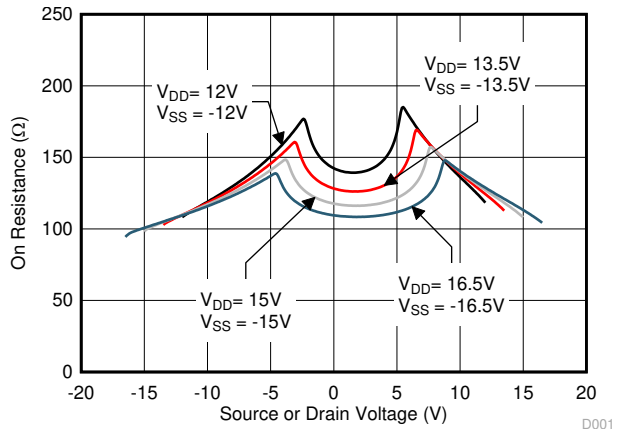

Dual Supply Operation (T_A = 25°C)

Figure 5-1. On-Resistance vs Source or Drain Voltage

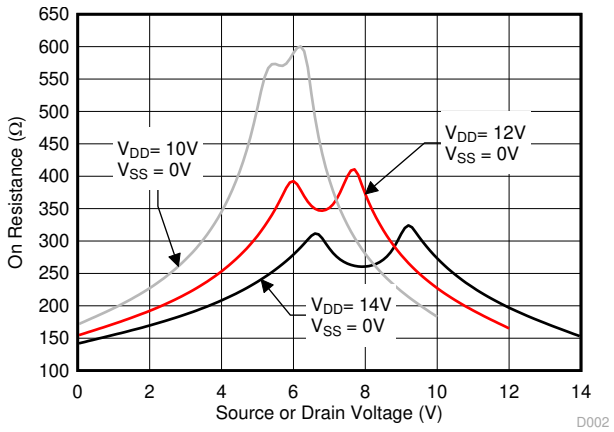

Single Supply Operation (T_A = 25°C)

Figure 5-2. On-Resistance vs Source or Drain Voltage

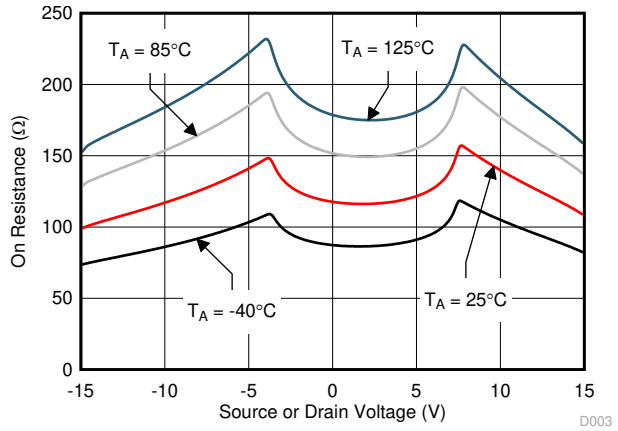

V_{DD} = 15V, V_{SS} = –15V

Figure 5-3. On-Resistance vs Source or Drain Voltage

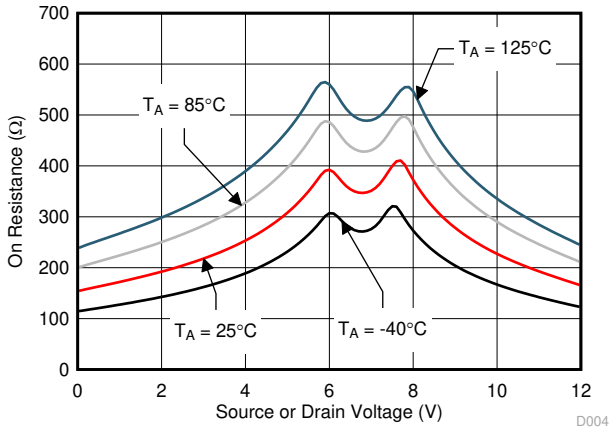

V_{DD} = 12V, V_{SS} = 0V

Figure 5-4. On-Resistance vs Source or Drain Voltage

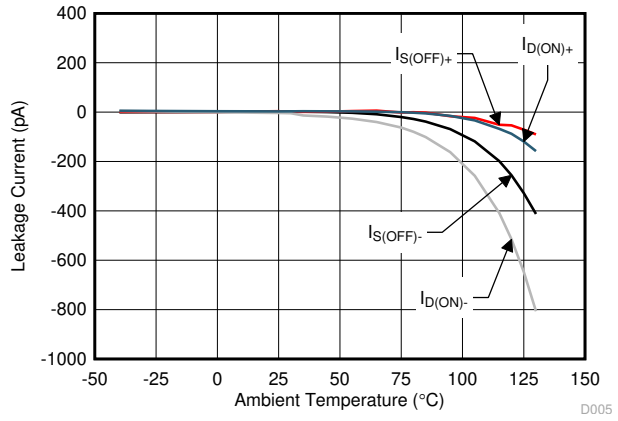

V_{DD} = 15V, V_{SS} = –15V

Figure 5-5. Leakage Current vs Temperature

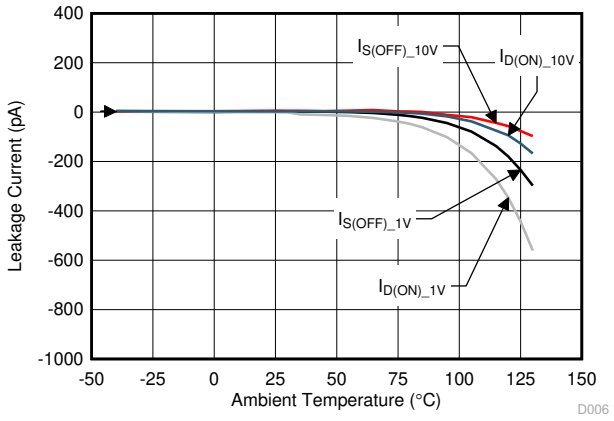

V_{DD} = 12V, V_{SS} = 0V

Figure 5-6. Leakage Current vs Temperature

5.9 Typical Characteristics (continued)

at T_A = 25°C, V_{DD} = 15V, and V_{SS} = –15V (unless otherwise noted)

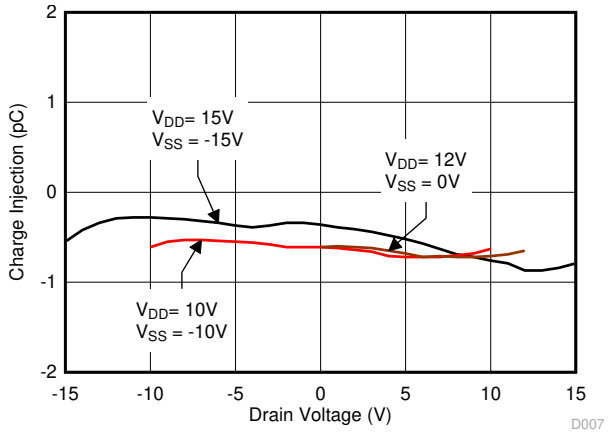

T_A = 25°C

Figure 5-7. Charge Injection vs Source Voltage

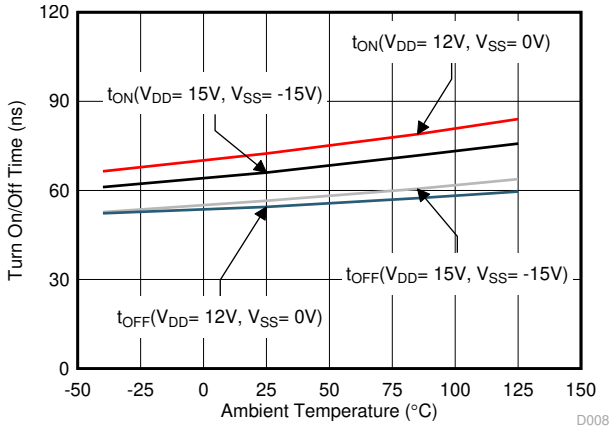

Figure 5-8. Transition Times vs Temperature

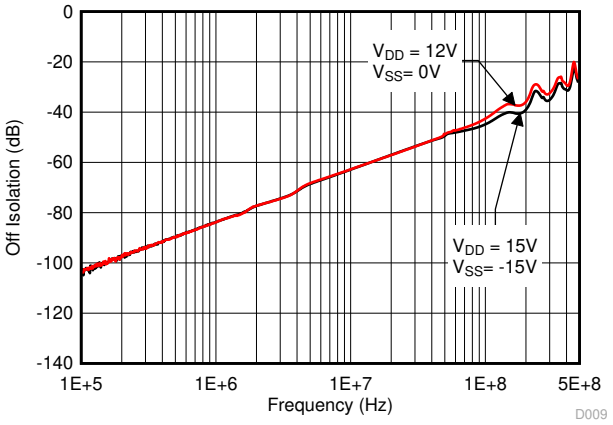

T_A = 25°C

Figure 5-9. Off Isolation vs Frequency

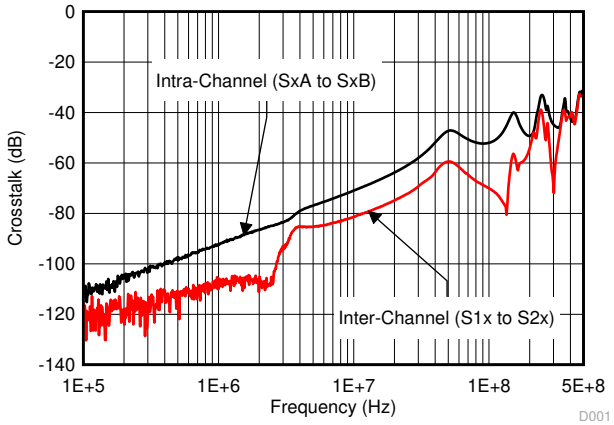

V_{DD} = 15V, V_{SS} = –15V, T_A = 25°C

Figure 5-10. Crosstalk vs Frequency

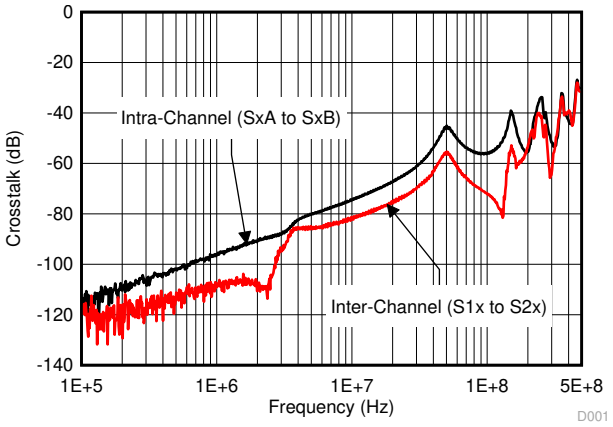

V_{DD} = 12V, V_{SS} = 0V, T_A = 25°C

Figure 5-11. Crosstalk vs Frequency

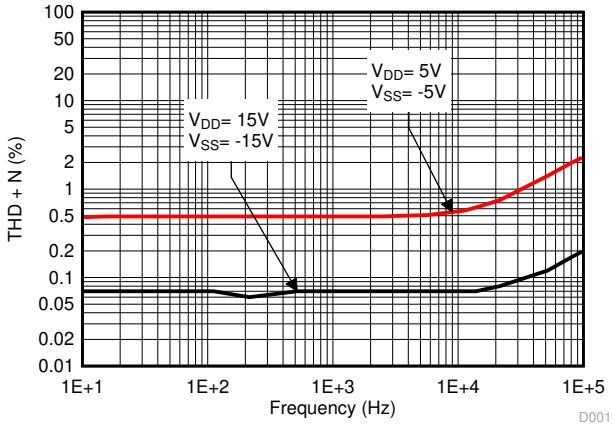

T_A = 25°C

Figure 5-12. THD+N vs Frequency

Copyright © 2025 Texas Instruments Incorporated

5.9 Typical Characteristics (continued)

at T_A = 25°C, V_{DD} = 15V, and V_{SS} = –15V (unless otherwise noted)

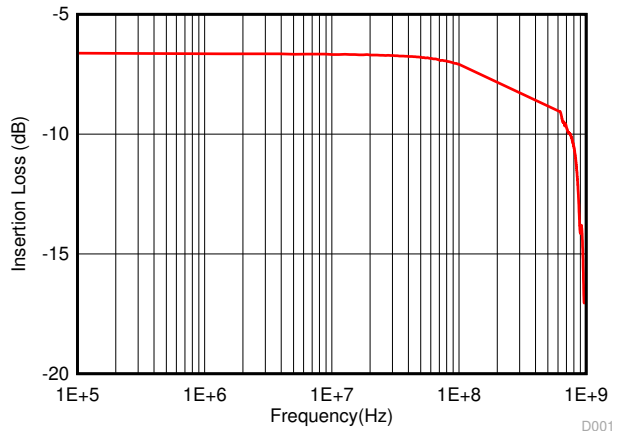

V_{DD} = 15V, V_{SS} = –15V, T_A = 25°C

Figure 5-13. On Response vs Frequency

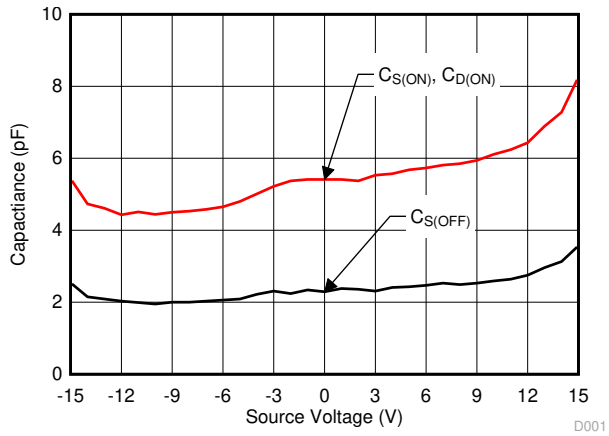

V_{DD} = 15V, V_{SS} = –15V, T_A = 25°C

Figure 5-14. Capacitance vs Source Voltage

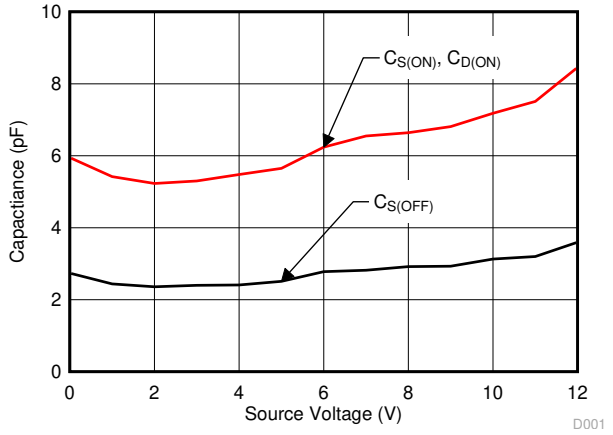

V_{DD} = 12V, V_{SS} = 0V, T_A = 25°C

Figure 5-15. Capacitance vs Source Voltage

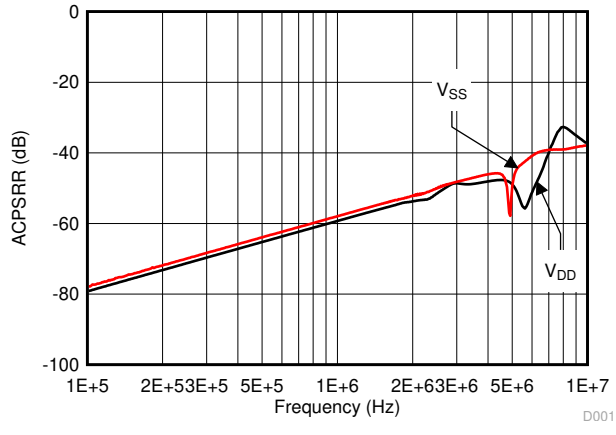

V_{DD} = 15V, V_{SS} = –15V, T_A = 25°C

Figure 5-16. ACPSRR vs Frequency

6 Detailed Description

6.1 Overview

6.1.1 On-Resistance

The on-resistance of the TMUX6136 is the ohmic resistance across the source (Sx) and drain (D) pins of the device. The on-resistance varies with input voltage and supply voltage. The symbol R_{ON} is used to denote on-resistance. The measurement setup used to measure R_{ON} is shown in Figure 6-1. Voltage (V) and current (I_{CH}) are measured using this setup, and R_{ON} is computed as shown in Equation 1.

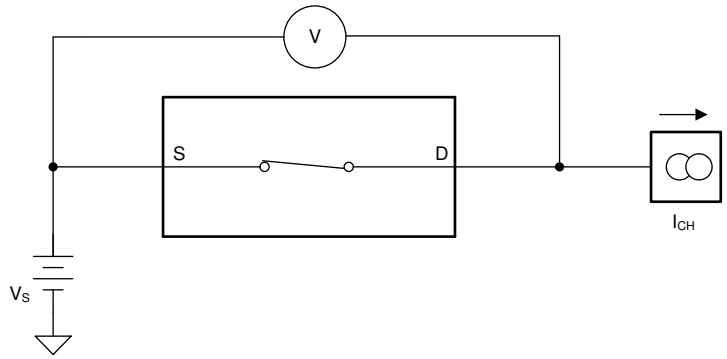

Figure 6-1. On-Resistance Measurement Setup

$$R_{ON} = V / I_{CH} \tag{1}$$

6.1.2 Off-Leakage Current

Source off-leakage current is defined as the leakage current that flows into or out of the source pin when the switch is in the off state. This current is denoted by the symbol $I_{S(OFF)}$. Drain off-leakage measurement is not characterization since the drain pin is always connected to one of the two source pins.

The setup used to measure both off-leakage currents is shown in Figure 6-2.

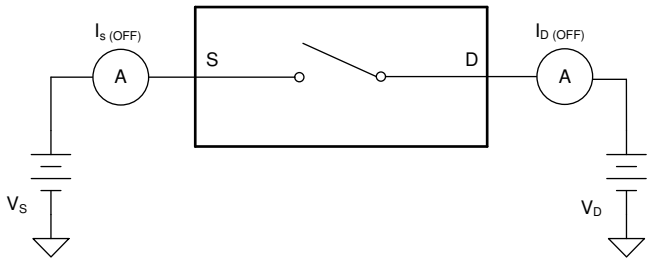

Figure 6-2. Off-Leakage Measurement Setup

Copyright © 2025 Texas Instruments Incorporated

6.1.3 On-Leakage Current

On-leakage current is defined as the leakage current that flows into or out of the drain pin when the switch is in the on state. The source pin is left floating during the measurement. Figure 6-3 shows the circuit used for measuring the on-leakage current, denoted by $I_{D(ON)}$.

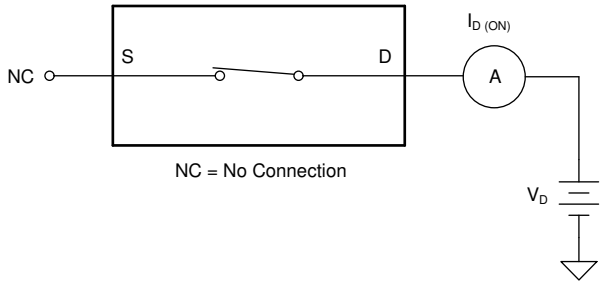

Figure 6-3. On-Leakage Measurement Setup

6.1.4 Transition Time

Transition time is defined as the time taken by the output of the TMUX6136 to rise or fall to 90% of the transition after the digital address signal has fallen or risen to 50% of the transition. Figure 6-4 shows the setup used to measure transition time, denoted by the symbol t_{TRAN}.

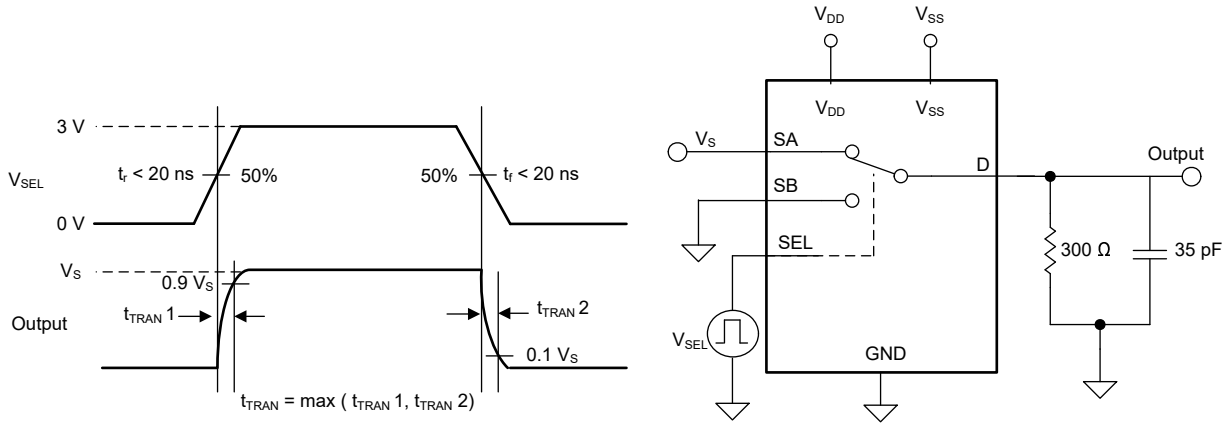

Figure 6-4. Transition-Time Measurement Setup

6.1.5 Break-Before-Make Delay

Break-before-make delay is a safety feature that prevents two inputs from connecting when the TMUX6136 is switching. The TMUX6136 output first breaks from the on-state switch before making the connection with the next on-state switch. The time delay between the *break* and the *make* is known as break-before-make delay. Figure 6-5 shows the setup used to measure break-before-make delay, denoted by the symbol t_{BBM}.

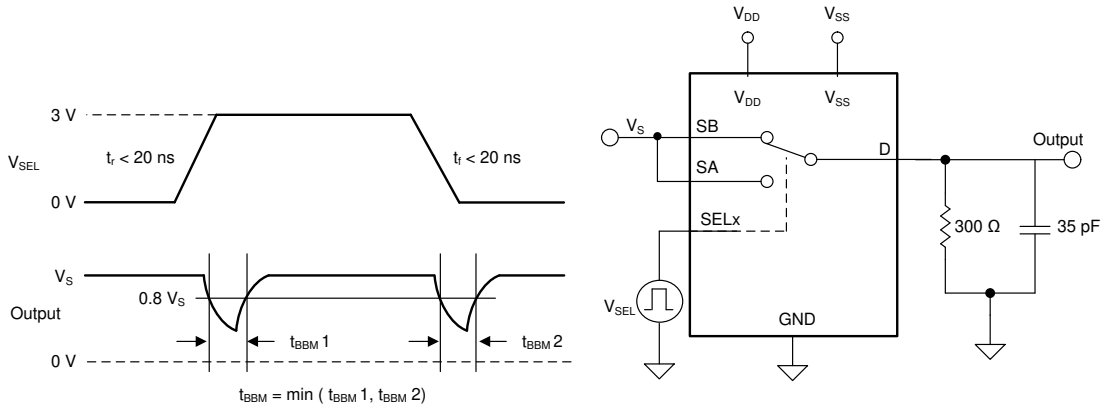

Figure 6-5. Break-Before-Make Delay Measurement Setup

6.1.6 Charge Injection

The TMUX6136 have a simple transmission-gate topology. Any mismatch in capacitance between the NMOS and PMOS transistors results in a charge injected into the drain or source during the falling or rising edge of the gate signal. The amount of charge injected into the source of the device is known as charge injection, and is denoted by the symbol Q_{INJ}. Figure 6-6 shows the setup used to measure charge injection from drain (D) to source (Sx).

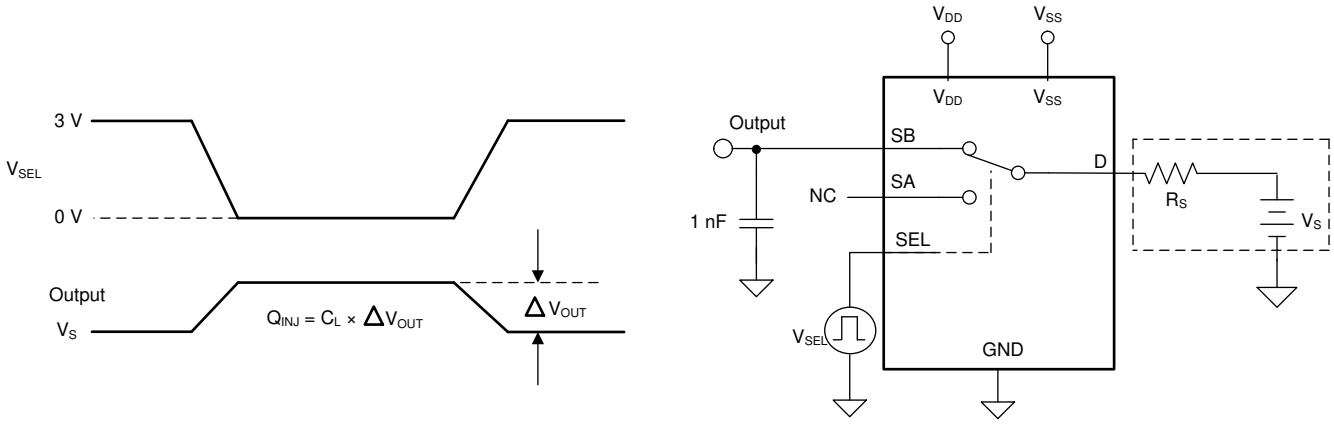

Figure 6-6. Charge-Injection Measurement Setup

6.1.7 Off Isolation

Off isolation is defined as the voltage at the drain pin (D) of the TMUX6136 when a 1-V_{RMS} signal is applied to the source pin (Sx) of an off-channel. Figure 6-7 shows the setup used to measure off isolation. Use Equation 2 to compute off isolation.

Copyright © 2025 Texas Instruments Incorporated

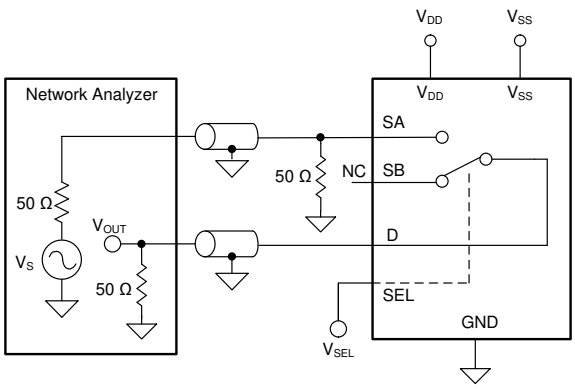

Figure 6-7. Off Isolation Measurement Setup

$$Off\ Isolation = 20\ \times\ Log\left(\frac{V_{OUT}}{V_S}\right) \tag{2}$$

6.1.8 Channel-to-Channel Crosstalk

There are two types of crosstalk that can be defined for the TMUX6136:

1. Intra-channel crosstalk: the voltage at the source pin (Sx) of an off-switch input, when a 1-VRMS signal is applied at the source pin of an on-switch input in the same channel, as shown in Figure 6-8.
2. Inter-channel crosstalk: the voltage at the source pin (Sx) of an on-switch input, when a 1-VRMS signal is applied at the source pin of an on-switch input in a different channel, as shown in Figure 6-9.

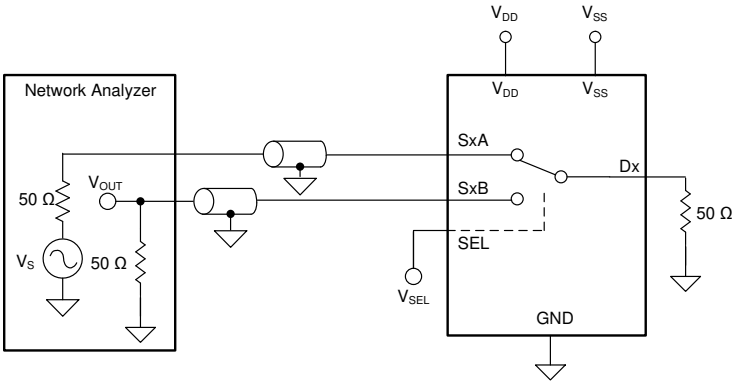

Figure 6-8. Intra-Channel Crosstalk Measurement Setup

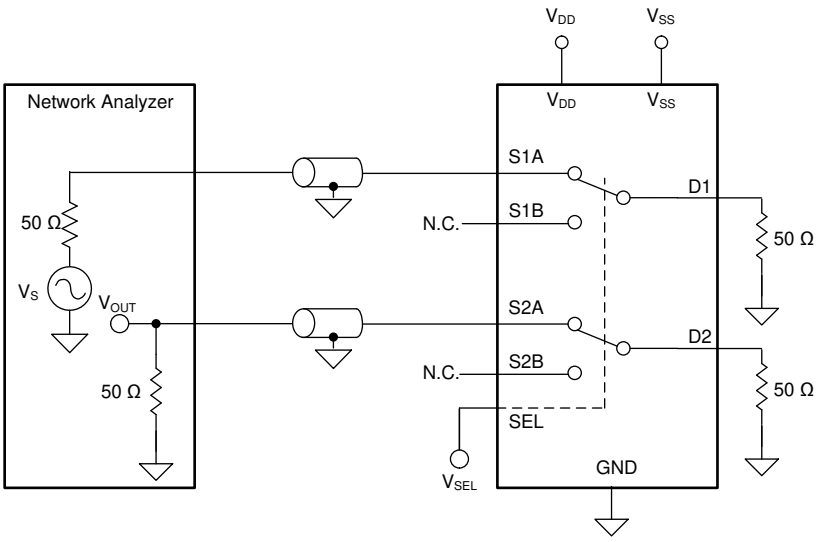

Figure 6-9. Inter-Channel Crosstalk Measurement Setup

$$Channel - to - Channel\ Crosstalk = 20\ \times\ Log\left(\frac{V_{OUT}}{V_S}\right) \tag{3}$$

6.1.9 Bandwidth

Bandwidth is defined as the range of frequencies that are attenuated by < 3dB when the input is applied to the source pin (Sx) of an on-channel, and the output is measured at the drain pin (D) of the TMUX6136. Figure 6-10 shows the setup used to measure bandwidth of the mux. Use Equation 4 to compute the attenuation.

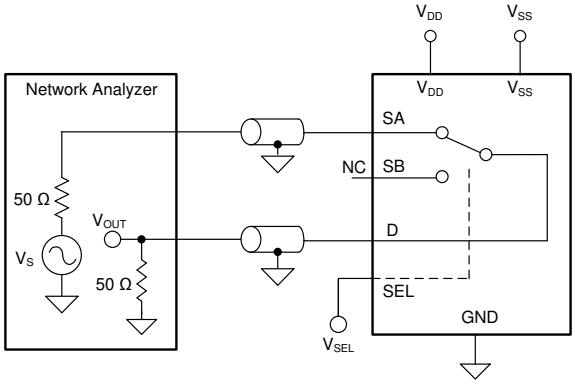

Figure 6-10. Bandwidth Measurement Setup

$$Attenuation = 20\ \times\ Log\left(\frac{V_2}{V_1}\right) \tag{4}$$

6.1.10 THD + Noise

The total harmonic distortion (THD) of a signal is a measurement of the harmonic distortion, and is defined as the ratio of the sum of the powers of all harmonic components to the power of the fundamental frequency at the mux output. The on-resistance of the TMUX6136 varies with the amplitude of the input signal and results in distortion when the drain pin is connected to a low-impedance load. Total harmonic distortion plus noise is denoted as THD+N.

Copyright © 2025 Texas Instruments Incorporated

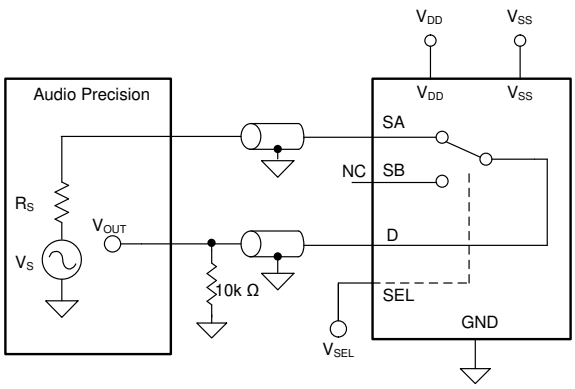

Figure 6-11. THD+N Measurement Setup

6.1.11 AC Power Supply Rejection Ratio (AC PSRR)

AC PSRR measures the ability of a device to prevent noise and spurious signals that appear on the supply voltage pin from coupling to the output of the switch. The DC voltage on the device supply is modulated by a sine wave of 620mV_{PP}. The ratio of the amplitude of signal on the output to the amplitude of the modulated signal is the AC PSRR.

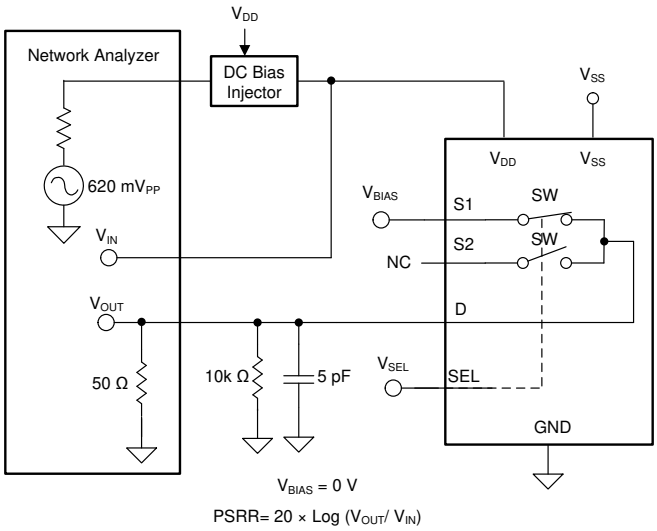

Figure 6-12. AC PSRR Measurement Setup

For a top-level block diagram of the TMUX6136, see Section 6.2. The TMUX6136 is a 4-channel, single-ended, analog multiplexer. Each channel is turned on or turned off based on the state of the address lines and enable pin.

6.2 Functional Block Diagram

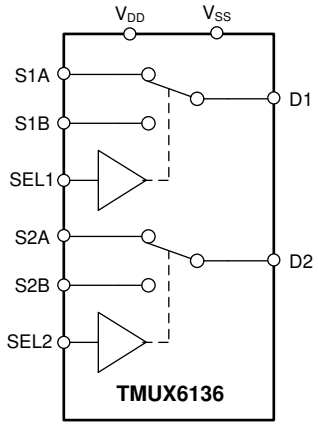

Copyright © 2018, Texas Instruments Incorporated

6.3 Feature Description

6.3.1 Ultralow Leakage Current

The TMUX6136 provides extremely low on- and off-leakage currents. The TMUX6136 is capable of switching signals from high source-impedance inputs into a high input-impedance op amp with minimal offset error because of the ultralow leakage currents. Figure 6-13 shows typical leakage currents of the TMUX6136 versus temperature.

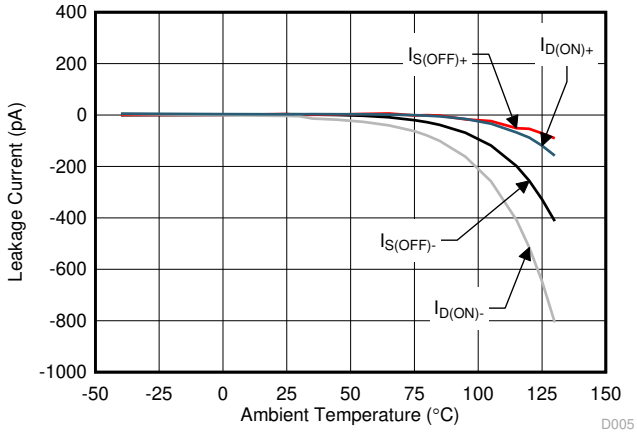

Figure 6-13. Leakage Current vs Temperature

6.3.2 Ultralow Charge Injection

The TMUX6136 is implemented with simple transmission gate topology, as shown in Figure 6-14. Any mismatch in the stray capacitance associated with the NMOS and PMOS causes an output level change whenever the switch is opened or closed.

Copyright © 2025 Texas Instruments Incorporated

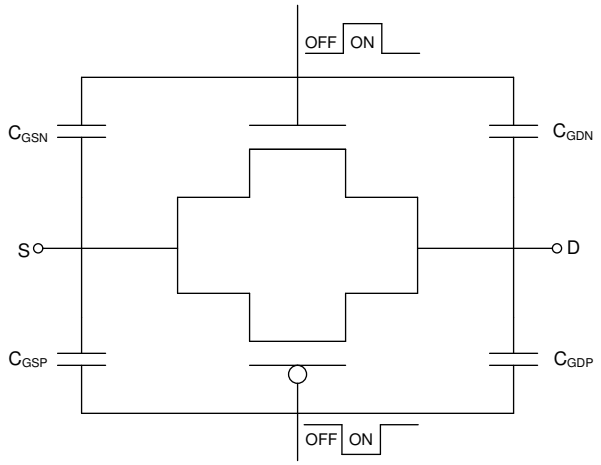

Figure 6-14. Transmission Gate Topology

The TMUX6136 utilizes special charge-injection cancellation circuitry that reduces the drain (D)-to-source (Sx) charge injection to as low as –0.4pC at V_S = 0V, as shown in Figure 6-15.

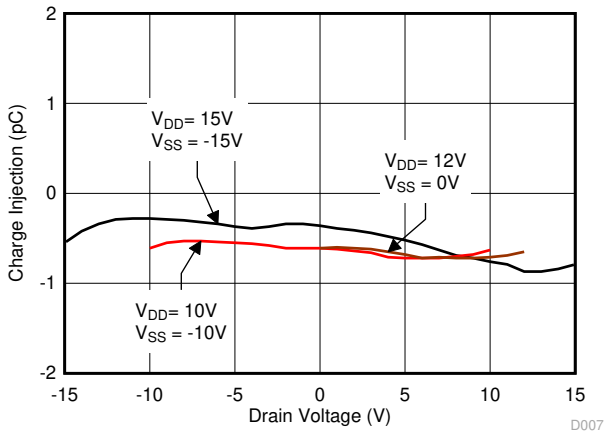

Figure 6-15. Charge Injection vs Drain Voltage

6.3.3 Bidirectional and Rail-to-Rail Operation

The TMUX6136 conducts equally well from source (Sx) to drain (D) or from drain (D) to source (Sx). Each TMUX6136 channel has very similar characteristics in both directions. The valid analog signal for TMUX6136 ranges from V_{SS} to V_{DD}. The input signal to the TMUX6136 swings from V_{SS} to V_{DD} without any significant degradation in performance.

6.4 Device Functional Modes

6.4.1 Truth Table

Table 6-1. TMUX6136 Truth Table

SELx	Switch A (S1A to D1 or S2A to D2)	Switch B (S1B to D1 or S2B to D2)
0	OFF	ON
1	ON	OFF

7 Application and Implementation

Note

Information in the following applications sections is not part of the TI component specification, and TI does not warrant its accuracy or completeness. TI's customers are responsible for determining suitability of components for their purposes, as well as validating and testing their design implementation to confirm system functionality.

7.1 Application Information

The TMUX6136 offers outstanding input and output leakage currents and ultralow charge injection. The device operates up to 33V (V_{DD} to V_{SS} dual supply) or 16.5V (V_{DD} single supply), and offers true rail-to-rail input and output. The on-capacitance of the TMUX6136 is low. These features make the TMUX6136 a precision, robust, high-performance analog multiplexer for high-voltage, industrial applications.

7.2 Typical Application

One example of the TMUX6136 precision performance to take advantage of is the implementation of parametric measurement unit (PMU) in the semiconductor automatic test equipment (ATE) application. The PMU is frequently used to characterize and measure the digital pin's DC characteristics of a device under test (DUT). Among all the PMU's capabilities, force voltage measure current (FVMC) and force current measure voltage (FCMV) are the two most typical configurations in DC characterizations.

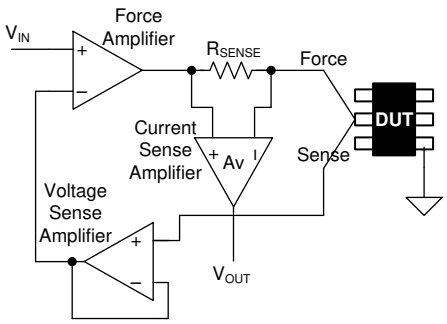

Figure 7-1. FVMC Measurement in PMU

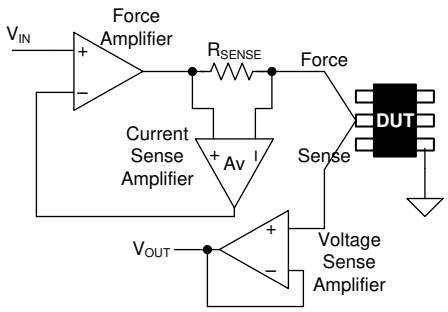

Figure 7-2. FCMV Measurement in PMU

Figure 7-1 shows a simplified diagram of the PMU in FVMC configuration. The control loop consists of the force amplifier with the voltage sense amplifier (unity gain in this example) making up the feedback path. Current flowing through the DUT is measured by sensing the current flowing through a sense resistor (R_{SENSE}) in series with the DUT. The current sense amplifier with a gain of Av generates a voltage (V_{OUT}) at its output and the voltage can then be measured by an ADC. The voltage produced at the DUT pin stays at the input voltage level (IN) as long as the force amplifier does not rail out (for example, $I_{DUT} \times R_{SENSE}$ x Av stays within the input voltage range of the force amplifier). Depending on the level of the DUT current to be measured, different gain settings need to be configured for the current sense amplifier.

Figure 7-2 shows a simplified diagram of the PMU in FCMV mode. The voltage V_{IN} is now converted to a current through the following relationship:

$$Force\ Current = V_{IN} \,/\, (R_{SENSE} \times Av) \tag{5}$$

The control loop consists of the force amplifier with the current sense amplifier making up the feedback path. The voltage at the DUT is sensed across the voltage sense amplifier (unity gain in this example) and presented at the output for sample.

Copyright © 2025 Texas Instruments Incorporated

7.2.1 Design Requirements

The goal of this design example is to simplify the FVMC and FCMV functions of a PMU design using a SPDT switch. The FVMC configuration is useful to test a device being used as a power supply, or in continuity or leakage testing. In this configuration, the input voltage is directly applied to the DUT pin, and the current into or out of the DUT pin is converted to a voltage by a sense resistor and measured by an analog to digital converter (ADC). In the FCMV mode, an input current is forced to the DUT and the produced voltage on the DUT pin is directly measured. In this example, the PMU design is required to meet the following specifications:

- Force voltage range: –15volts to +15volts
- Force current range: ±5µA to ±50mA
- Measure voltage range: –15volts to +15volts
- Measure current range: ±5µA to ±50mA

In addition to the voltage and current requirements, fast throughput is also a key requirement in ATE because it relates directly to the cost of manufacturing the DUT.

7.2.2 Detailed Design Procedure

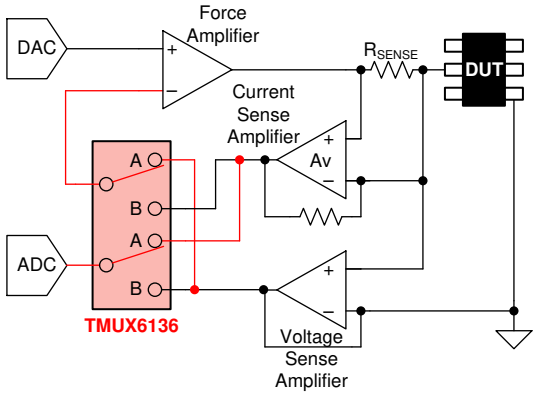

Figure 7-3. FVMC Implementation in PMU Using the TMUX6136

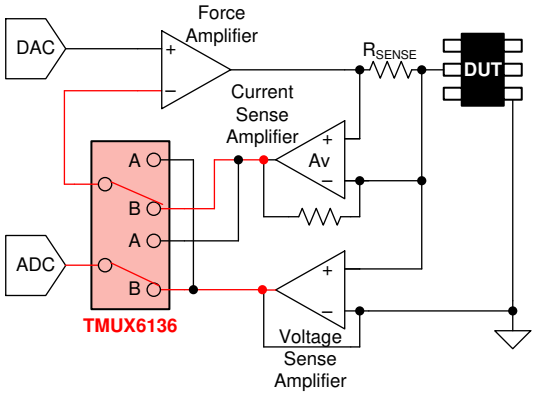

Figure 7-4. FCMV Implementation in PMU Using the TMUX6136

The implementation of the FVMC and FCMV modes can be combined with the use of a dual SPDT switch such as the TMUX6136. Figure 7-3 and Figure 7-4 shows simplified diagrams of such implementations. In the FVMC mode, the switch is toggled to position A and this allows the voltage sense amplifier to become part of the feedback loop and the voltage output of the current sense amplifier to be sampled by the ADC. In the FCMV mode, the switch is toggled to position B, and this allows the current sense amplifier to become part of the feedback loop and the voltage output of the voltage sense amplifier to be sampled by the ADC.

Copyright © 2025 Texas Instruments Incorporated

7.2.3 Application Curve

The fast transition time of the TMUX6136 and low input or output parasitic capacitance help minimize the settling time, making the TMUX6136 an excellent candidate to implement the FVMC and FCMV functions of the PMU. Figure 7-5 shows the plot for the transition time versus temperature for the TMUX6136.

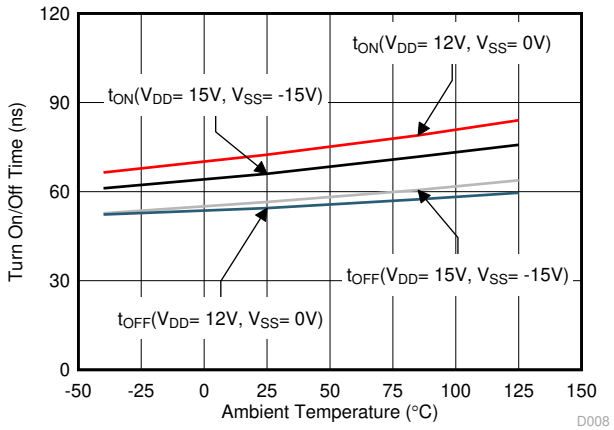

Figure 7-5. Transition Time vs Temperature for TMUX6136

8 Power Supply Recommendations

The TMUX6136 operates across a wide supply range of ±5V to ±16.5V (10V to 16.5V in single-supply mode). The device also performs well with unsymmetric supplies such as V_{DD} = 12V and V_{SS}= –5V. For reliable operation, use a supply decoupling capacitor ranging between 0.1µF to 10µF at both the V_{DD} and V_{SS} pins to ground.

Copyright © 2025 Texas Instruments Incorporated

9 Layout

9.1 Layout Guidelines

Figure 9-1 shows an example of a PCB layout with the TMUX6136.

Some key considerations are as follows:

1. Decouple the V_{DD} and V_{SS} pins with a 0.1µF capacitor, placed as close to the pin as possible. Make sure that the capacitor voltage rating is sufficient for the V_{DD} and V_{SS} supplies.
2. Keep the input lines as short as possible.
3. Use a solid ground plane to help distribute heat and reduce electromagnetic interference (EMI) noise pickup.
4. Do not run sensitive analog traces in parallel with digital traces. Avoid crossing digital and analog traces if possible, and only make perpendicular crossings when necessary.

9.2 Layout Example

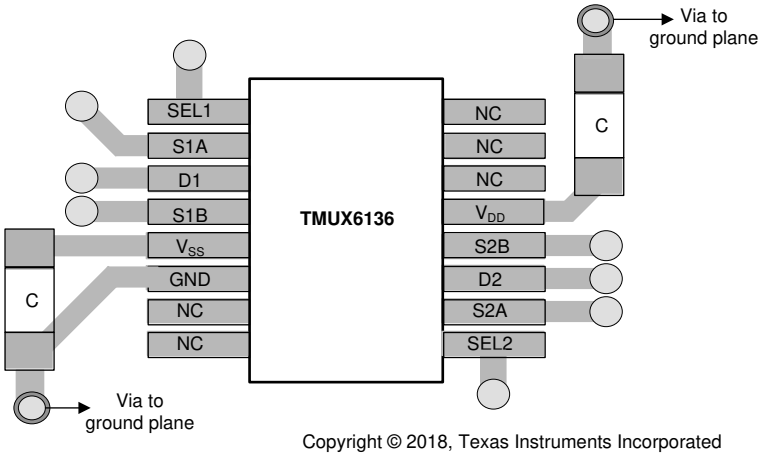

Figure 9-1. TMUX6136 Layout Example

10 Device and Documentation Support

10.1 Documentation Support

10.1.1 Related Documentation

For related documentation, see the following:

- Texas Instruments, *ADS8664 12-Bit, 500-kSPS, 4- and 8-Channel, Single-Supply, SAR ADCs with Bipolar Input Ranges*
- Texas Instruments, *OPA192 36-V, Precision, Rail-to-Rail Input/Output, Low Offset Voltage, Low Input Bias Current Op Amp with e-Trim™*

10.2 Receiving Notification of Documentation Updates

To receive notification of documentation updates, navigate to the device product folder on ti.com. Click on *Notifications* to register and receive a weekly digest of any product information that has changed. For change details, review the revision history included in any revised document.

10.3 Support Resources

TI E2E™ support forums are an engineer's go-to source for fast, verified answers and design help — straight from the experts. Search existing answers or ask your own question to get the quick design help you need.

Linked content is provided "AS IS" by the respective contributors. They do not constitute TI specifications and do not necessarily reflect TI's views; see TI's Terms of Use.

10.4 Trademarks

TI E2E™ is a trademark of Texas Instruments.
All trademarks are the property of their respective owners.

10.5 Electrostatic Discharge Caution

This integrated circuit can be damaged by ESD. Texas Instruments recommends that all integrated circuits be handled with appropriate precautions. Failure to observe proper handling and installation procedures can cause damage.

ESD damage can range from subtle performance degradation to complete device failure. Precision integrated circuits may be more susceptible to damage because very small parametric changes could cause the device not to meet its published specifications.

10.6 Glossary

TI Glossary	This glossary lists and explains terms, acronyms, and definitions.

11 Revision History

NOTE: Page numbers for previous revisions may differ from page numbers in the current version.

Changes from Revision A (October 2022) to Revision B (August 2025)	Page
• Updated low input leakage from 0.5pA to 5pA	1

Changes from Revision * (November 2018) to Revision A (October 2022)	Page
• Updated the numbering format for tables, figures, and cross-references throughout the document	1
• Updated the *Transition-Time Measurement Setup* figure	13

12 Mechanical, Packaging, and Orderable Information

The following pages include mechanical, packaging, and orderable information. This information is the most current data available for the designated devices. This data is subject to change without notice and revision of this document. For browser-based versions of this data sheet, refer to the left-hand navigation.

Copyright © 2025 Texas Instruments Incorporated

PACKAGING INFORMATION

Orderable part number	Status (1)	Material type (2)	Package | Pins	Package qty | Carrier	RoHS (3)	Lead finish/ Ball material (4)	MSL rating/ Peak reflow (5)	Op temp (°C)	Part marking (6)
TMUX6136PWR	Active	Production	TSSOP (PW) | 16	2000 | LARGE T&R	Yes	NIPDAU | SN	Level-1-260C-UNLIM	-40 to 125	MUX6136
TMUX6136PWR.B	Active	Production	TSSOP (PW) | 16	2000 | LARGE T&R	Yes	NIPDAU	Level-1-260C-UNLIM	-40 to 125	MUX6136
TMUX6136PWRG4	Active	Production	TSSOP (PW) | 16	2000 | LARGE T&R	Yes	NIPDAU	Level-1-260C-UNLIM	-40 to 125	MUX6136
TMUX6136PWRG4.B	Active	Production	TSSOP (PW) | 16	2000 | LARGE T&R	Yes	NIPDAU	Level-1-260C-UNLIM	-40 to 125	MUX6136

(1) **Status:** For more details on status, see our product life cycle.

(2) **Material type:** When designated, preproduction parts are prototypes/experimental devices, and are not yet approved or released for full production. Testing and final process, including without limitation quality assurance, reliability performance testing, and/or process qualification, may not yet be complete, and this item is subject to further changes or possible discontinuation. If available for ordering, purchases will be subject to an additional waiver at checkout, and are intended for early internal evaluation purposes only. These items are sold without warranties of any kind.

(3) **RoHS values:** Yes, No, RoHS Exempt. See the TI RoHS Statement for additional information and value definition.

(4) **Lead finish/Ball material:** Parts may have multiple material finish options. Finish options are separated by a vertical ruled line. Lead finish/Ball material values may wrap to two lines if the finish value exceeds the maximum column width.

(5) **MSL rating/Peak reflow:** The moisture sensitivity level ratings and peak solder (reflow) temperatures. In the event that a part has multiple moisture sensitivity ratings, only the lowest level per JEDEC standards is shown. Refer to the shipping label for the actual reflow temperature that will be used to mount the part to the printed circuit board.

(6) **Part marking:** There may be an additional marking, which relates to the logo, the lot trace code information, or the environmental category of the part.

Multiple part markings will be inside parentheses. Only one part marking contained in parentheses and separated by a "~" will appear on a part. If a line is indented then it is a continuation of the previous line and the two combined represent the entire part marking for that device.

Important Information and Disclaimer: The information provided on this page represents TI's knowledge and belief as of the date that it is provided. TI bases its knowledge and belief on information provided by third parties, and makes no representation or warranty as to the accuracy of such information. Efforts are underway to better integrate information from third parties. TI has taken and continues to take reasonable steps to provide representative and accurate information but may not have conducted destructive testing or chemical analysis on incoming materials and chemicals. TI and TI suppliers consider certain information to be proprietary, and thus CAS numbers and other limited information may not be available for release.

In no event shall TI's liability arising out of such information exceed the total purchase price of the TI part(s) at issue in this document sold by TI to Customer on an annual basis.

TAPE AND REEL INFORMATION

REEL DIMENSIONS

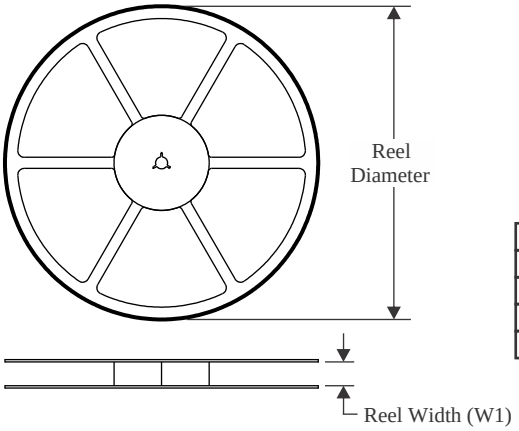

TAPE DIMENSIONS

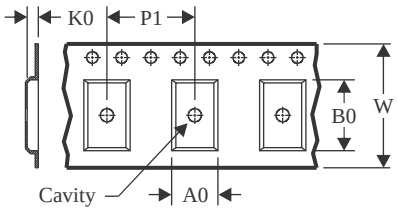

A0	Dimension designed to accommodate the component width
B0	Dimension designed to accommodate the component length
K0	Dimension designed to accommodate the component thickness
W	Overall width of the carrier tape
P1	Pitch between successive cavity centers

QUADRANT ASSIGNMENTS FOR PIN 1 ORIENTATION IN TAPE

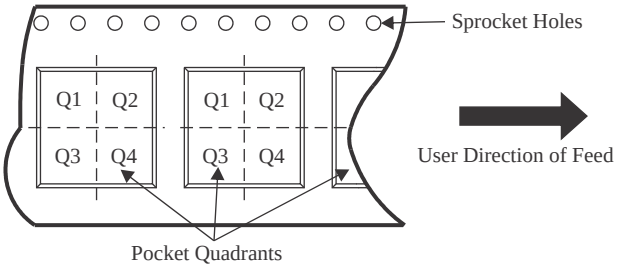

*All dimensions are nominal

Device	Package Type	Package Drawing	Pins	SPQ	Reel Diameter (mm)	Reel Width W1 (mm)	A0 (mm)	B0 (mm)	K0 (mm)	P1 (mm)	W (mm)	Pin1 Quadrant
TMUX6136PWR	TSSOP	PW	16	2000	330.0	12.4	6.9	5.6	1.6	8.0	12.0	Q1
TMUX6136PWRG4	TSSOP	PW	16	2000	330.0	12.4	6.9	5.6	1.6	8.0	12.0	Q1

TAPE AND REEL BOX DIMENSIONS

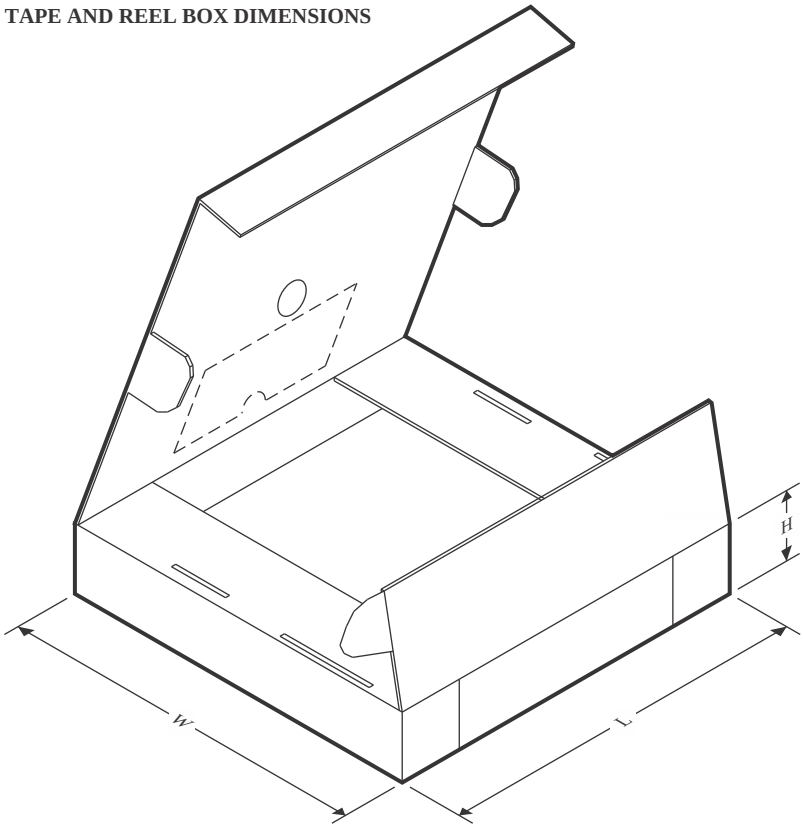

*All dimensions are nominal

Device	Package Type	Package Drawing	Pins	SPQ	Length (mm)	Width (mm)	Height (mm)
TMUX6136PWR	TSSOP	PW	16	2000	356.0	356.0	35.0
TMUX6136PWRG4	TSSOP	PW	16	2000	353.0	353.0	32.0

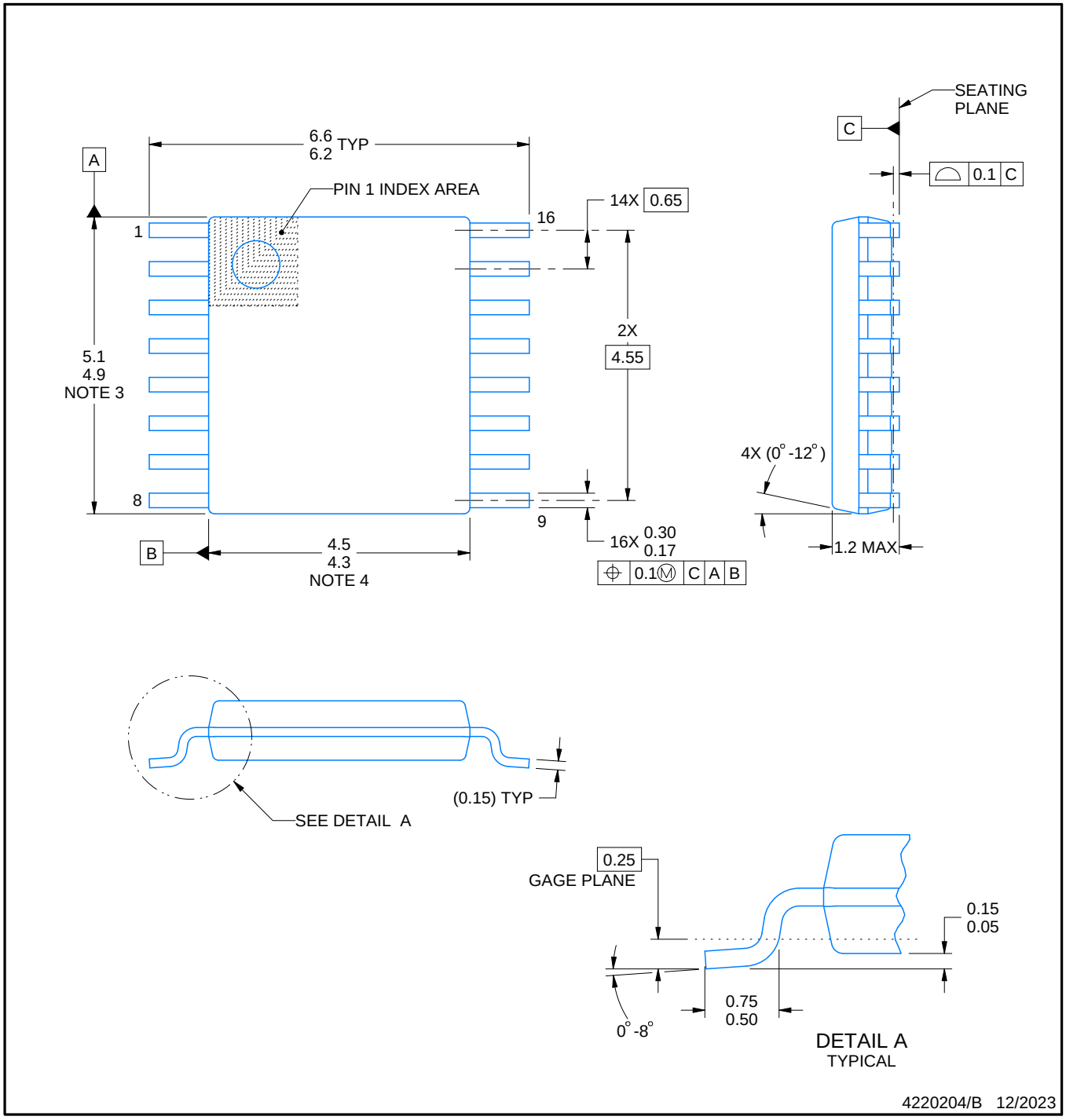

NOTES:

1. All linear dimensions are in millimeters. Any dimensions in parenthesis are for reference only. Dimensioning and tolerancing per ASME Y14.5M.
2. This drawing is subject to change without notice.
3. This dimension does not include mold flash, protrusions, or gate burrs. Mold flash, protrusions, or gate burrs shall not exceed 0.15 mm per side.
4. This dimension does not include interlead flash. Interlead flash shall not exceed 0.25 mm per side.
5. Reference JEDEC registration MO-153.

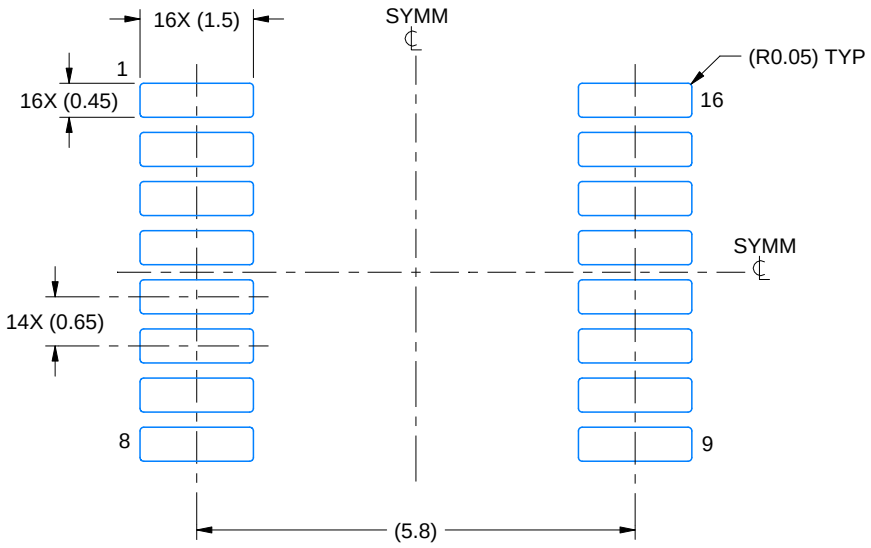

LAND PATTERN EXAMPLE
EXPOSED METAL SHOWN
SCALE: 10X

NON-SOLDER MASK DEFINED (PREFERRED)

SOLDER MASK DEFINED

SOLDER MASK DETAILS

4220204/B 12/2023

NOTES: (continued)

6. Publication IPC-7351 may have alternate designs.
7. Solder mask tolerances between and around signal pads can vary based on board fabrication site.

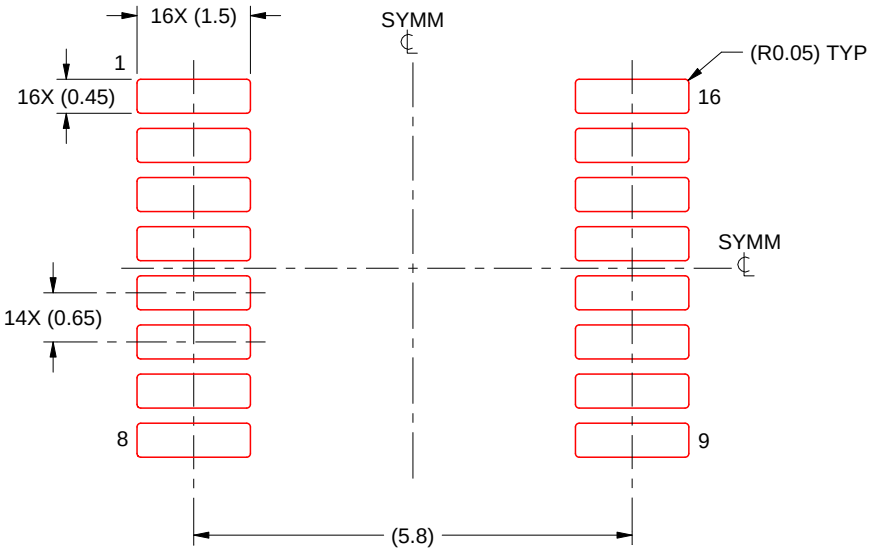

SOLDER PASTE EXAMPLE
BASED ON 0.125 mm THICK STENCIL
SCALE: 10X

4220204/B 12/2023

NOTES: (continued)

8. Laser cutting apertures with trapezoidal walls and rounded corners may offer better paste release. IPC-7525 may have alternate design recommendations.
9. Board assembly site may have different recommendations for stencil design.

IMPORTANT NOTICE AND DISCLAIMER

TI PROVIDES TECHNICAL AND RELIABILITY DATA (INCLUDING DATASHEETS), DESIGN RESOURCES (INCLUDING REFERENCE DESIGNS), APPLICATION OR OTHER DESIGN ADVICE, WEB TOOLS, SAFETY INFORMATION, AND OTHER RESOURCES “AS IS” AND WITH ALL FAULTS, AND DISCLAIMS ALL WARRANTIES, EXPRESS AND IMPLIED, INCLUDING WITHOUT LIMITATION ANY IMPLIED WARRANTIES OF MERCHANTABILITY, FITNESS FOR A PARTICULAR PURPOSE OR NON-INFRINGEMENT OF THIRD PARTY INTELLECTUAL PROPERTY RIGHTS.

These resources are intended for skilled developers designing with TI products. You are solely responsible for (1) selecting the appropriate TI products for your application, (2) designing, validating and testing your application, and (3) ensuring your application meets applicable standards, and any other safety, security, regulatory or other requirements.

These resources are subject to change without notice. TI grants you permission to use these resources only for development of an application that uses the TI products described in the resource. Other reproduction and display of these resources is prohibited. No license is granted to any other TI intellectual property right or to any third party intellectual property right. TI disclaims responsibility for, and you fully indemnify TI and its representatives against any claims, damages, costs, losses, and liabilities arising out of your use of these resources.

TI’s products are provided subject to TI’s Terms of Sale, TI’s General Quality Guidelines, or other applicable terms available either on ti.com or provided in conjunction with such TI products. TI’s provision of these resources does not expand or otherwise alter TI’s applicable warranties or warranty disclaimers for TI products. Unless TI explicitly designates a product as custom or customer-specified, TI products are standard, catalog, general purpose devices.

TI objects to and rejects any additional or different terms you may propose.

Copyright © 2026, Texas Instruments Incorporated

Last updated 10/2025