TMP9R01-SP (QMLP RHA) and TMP9R01-SEP (Radiation Tolerant) Space-Grade, I²C Digital Temperature Sensor With Remote and Local (On-Chip) Temperature Sensing

1 Features

- QMLP, Radiation Hardness Assured (RHA)
  - SMD 5962-17218:
  - TID characterized up to 100krad(Si)
  - TID RLAT/RHA to 100krad(Si)
  - SEL immune to LET= 75MeV×cm²/mg at 125°C
  - SEE characterized to LET= 75MeV×cm²/mg
  - SEFI characterized to LET= 75MeV×cm²/mg
  - QMLV version available: TMP461-SP
- Radiation Tolerant (Space Enhanced Plastic)
  - Vendor item drawing (VID) V62/24615
  - TID characterized up to 50krad(Si)
  - TID RLAT/RHA to 30krad(Si)
  - SEL immune to LET= 43MeV×cm²/mg at 125°C
  - SEE characterized to LET= 43MeV×cm²/mg
  - SEFI characterized to LET= 43MeV×cm²/mg
- Temperature accuracy and range:
  - 12-bit resolution: 0.0625°C (LSB)
  - Local (on-chip) temp accuracy: ±2.0°C (Max)
  - Remote junction temp accuracy: ±1.5°C (Max)
  - Remote range tested to: –64°C to 191°C
  - Military temperature range: -55 to 125°C
- Small-size package: VSSOP-10, 4.9mm × 3.0mm
- Integrated calibration/ protection features:
  - η-factor and offset correction
  - Series resistance cancellation
  - Remote BJT/diode fault detection
  - Programmable digital filter
- Wide operating range, low power:
  - Voltage supply range: 1.7V to 3.6V
  - I/O voltages: 1.8V, 2.5V, and 3.3V
  - Standby/shutdown IQ: 15µA/3µA
- TMP9R01 Example Driver

2 Applications

- Space-grade FPGA, ADCs, DACs, and ASIC integrated junction temperature sensing
- Communications payload
- Radar imaging payload
- Optical imaging payload
- On-board computer (OBC)
- Command & data handling (C&DH)
- ASC Studio

3 Description

The TMP9R01-SP (QML Class P) and TMP9R01-SEP (Radiation Tolerant, Space EP) are high-accuracy digital I²C space-grade temperature sensors integrating a 12-bit ADC, bias current sources, and calibration circuitry in a 10-pin VSSOP plastic package. The devices measure remote temperature by forcing a bias current through an external BJT or the integrated diode/junction of an FPGA, ADC, or ASIC, digitizing the resulting ΔV_{BE} and reporting temperature with 0.0625°C resolution. An additional sensor provides on-chip temperature.

The TMP9R01-SP and TMP9R01-SEP incorporate multiple calibration and protection features, including series-resistance cancellation, programmable non-ideality factor (η-Factor), offset correction, and programmable digital filter. Designers can set high- and low-temperature limits that drive the ALERT output for over-and-under temperature thermal protection. Up to 9 pin-selectable I²C/SMBus addresses allow multiple sensors on the same I²C bus. The devices are designed for multi-location spacecraft housekeeping, satellite telemetry, avionics, and other high-reliability applications that require precise, temperature sensing and with varying levels of radiation hardness.

The TMP9R01-SP is also available as a functionally equivalent QMLV-RHA device: TMP461-SP.

Package Information

DEVICE	Grade	PACKAGE[2]
5962R1721802PYE	QMLP RHA 100krad	10-pin plastic 4.9mm × 3.0mm Mass = 17.5mg ±10%
TMP9R01DGS/EM[(1)]	Engineering Sample	
TMP9R01MDGSTSEP	Rad Tolerant 30krad	

(1) Units intended only for engineering evaluation
(2) The mass is a nominal value and the body size (length × width) is a nominal value and include pins.

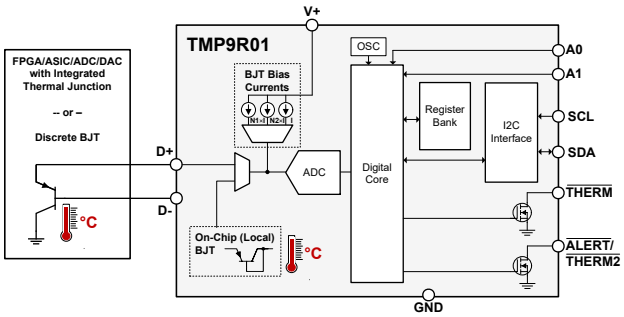

Functional Block Diagram

An IMPORTANT NOTICE at the end of this data sheet addresses availability, warranty, changes, use in safety-critical applications, intellectual property matters and other important disclaimers. PRODUCTION DATA.

Table of Contents

1 Features....1
2 Applications....1
3 Description....1
4 Device Information....3
5 Pin Configuration and Functions....4
6 Specifications....5
6.1 Absolute Maximum Ratings....5
6.2 ESD Ratings....5
6.3 Recommended Operating Conditions....5
6.4 Thermal Information....5
6.5 Electrical Characteristics....6
6.6 I^2C Interface Timing....8
6.7 Quality Conformance Inspection....8
6.8 Timing Diagrams....9
6.9 Typical Characteristics....10
7 Detailed Description....13
7.1 Overview....13
7.2 Functional Block Diagram....14
7.3 Feature Description....14
7.4 Device Functional Modes....18
7.5 Programming....18
8 Register Map....23
8.1 Register Information....24
9 Application and Implementation....29
9.1 Application Information....29
9.2 Typical Application....29
9.3 Radiation Environments....32
9.4 Power Supply Recommendations....32
9.5 Layout....33
10 Device and Documentation Support....35
10.1 Receiving Notification of Documentation Updates....35
10.2 Related Documentation....35
10.3 Support Resources....35
10.4 Trademarks....35
10.5 Electrostatic Discharge Caution....35
10.6 Glossary....35
11 Revision History....35
12 Mechanical, Packaging, and Orderable Information....36

Copyright © 2026 Texas Instruments Incorporated

4 Device Information

TMP9R01-SP and TMP9R01-SEP Device Information

DEVICE NAME	ORDERABLE NUMBER	GRADE
TMP9R01-SP	5962R1721802PYE	100krad RHA device (upcoming)
	TMP9R01DGS/EM	Engineering Samples
TMP9R01-SEP	TMP9R01MDGSTSEP	Radiation Tolerant, Space EP

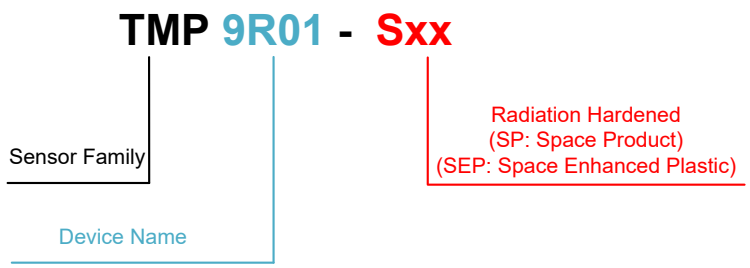

Figure 4-1. TMP9R01-SP and TMP9R01-SEP Device Name Nomenclature

Table 4-1. TMP9R01DGS/EM Order Number Nomenclature

Field Description	Field Detail
Sensor Family	**TMP**: Temperature Sensors
Device Name	**9R01**
TI Package Designator	**DGS**: VSSOP package designator
Device class	**EM**: Engineering Model (device intended for engineering evaluation only)

Table 4-2. TMP9R01MDGSTSEP Order Number Nomenclature

Field Description	Field Detail
Sensor Family	**TMP**: Temperature Sensors
Device Name	**9R01**
Operating Temperature Range	**M**: -55°C to 125°C
TI Package Designator	**DGS**: 10-pin VSSOP package, 1.1mm (max) height
T&R Packing Size	**T**: Small reel, SPQ = 250 units
Radiation hardened qualified	**SEP**: Space Enhanced Plastic

Copyright © 2026 Texas Instruments Incorporated

5 Pin Configuration and Functions

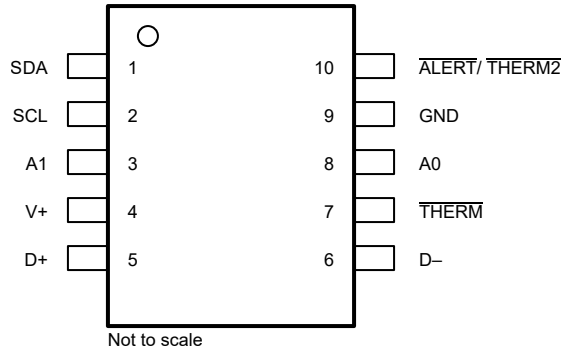

Figure 5-1. DGS Package
10-Pin VSSOP
(Top View)

Table 5-1. Pin Functions

Pin Number	Pin Name	Type[1]	Description
1	SDA	Digital I/O	Serial data line for SMBus. Open-drain; requires a pullup resistor to a voltage between 1.7V and 3.6V.
2	SCL	Digital I	Serial clock line for SMBus. Input; requires a pullup resistor to a voltage between 1.7V and 3.6V if driven by an open-drain output.
3	A1	Digital I	Address select. Connect to GND, V+, or leave floating.
4	V+	P	Positive supply voltage, 1.7V to 3.6V.
5	D+	Analog I	Positive connection to remote temperature sensor.
6	D–	Analog I	Negative connection to remote temperature sensor.
7	$\overline{\text{THERM}}$	Digital O	Thermal shutdown or fan-control pin. Open-drain; requires a pullup resistor to a voltage between 1.7V and 3.6V.
8	A0	Digital I	Address select. Connect to GND, V+, or leave floating.
9	GND	G	Supply ground connection.
10	$\overline{\text{ALERT}}$/ $\overline{\text{THERM2}}$	Digital O	Interrupt or SMBus alert output. Can be configured as a second $\overline{\text{THERM}}$ output. Open-drain; requires a pullup resistor to a voltage between 1.7V and 3.6V.

(1) I = Input; O = Output; I/O = Input or Output; P = Positive Supply; G = Ground

Copyright © 2026 Texas Instruments Incorporated

6 Specifications

6.1 Absolute Maximum Ratings

Over operating free-air temperature range (unless otherwise noted)[1]

		MIN	MAX	UNIT
Power supply	V+	–0.3	6	V
Input voltage	$\overline{\text{THERM}}$, $\overline{\text{ALERT}}$/$\overline{\text{THERM2}}$, SDA, and SCL only	–0.3	6	V
	D+, A0, A1	–0.3	(V+) + 0.3	
	D– only	–0.3	0.3	
Input current			10	mA
Operating temperature		–55	150	°C
Junction temperature, T_J max			150	°C
Storage temperature, T_{stg}		–60	150	°C

(1) Operation outside the Absolute Maximum Ratings may cause permanent device damage. Absolute Maximum Ratings do not imply functional operation of the device at these or any other conditions beyond those listed under Recommended Operating Conditions. If used outside the Recommended Operating Conditions but within the Absolute Maximum Ratings, the device may not be fully functional, and this may affect device reliability, functionality, performance, and shorten the device lifetime.

6.2 ESD Ratings

			VALUE	UNIT
$V_{(ESD)}$	Electrostatic discharge	Human body model (HBM), per ANSI/ESDA/JEDEC JS-001[1]	±2000	V
		Charged device model (CDM), JEDEC specification JESD22-C101[2]	±750	

(1) JEDEC document JEP155 states that 500V HBM allows safe manufacturing with a standard ESD control process.
(2) JEDEC document JEP157 states that 250V CDM allows safe manufacturing with a standard ESD control process.

6.3 Recommended Operating Conditions

Over operating free-air temperature range (unless otherwise noted)

		MIN	NOM	MAX	UNIT
V+	Supply voltage	1.7	3.3	3.6	V
T_A	Operating free-air temperature	–55		125	°C

6.4 Thermal Information

THERMAL METRIC[1]		TMP9R01-SP TMP9R01-SEP DGS (VSSOP) 10 PINS	UNIT
$R_{\theta JA}$	Junction-to-ambient thermal resistance	138.3	°C/W
$R_{\theta JC(top)}$	Junction-to-case (top) thermal resistance	47.9	°C/W
$R_{\theta JB}$	Junction-to-board thermal resistance	73.4	°C/W
ψ_{JT}	Junction-to-top characterization parameter	2.0	°C/W
ψ_{JB}	Junction-to-board characterization parameter	72	°C/W
$R_{\theta JC(bot)}$	Junction-to-case (bottom) thermal resistance	N/A	°C/W

(1) For more information about traditional and new thermal metrics, see the *Semiconductor and IC Package Thermal Metrics* application note.

Copyright © 2026 Texas Instruments Incorporated

6.5 Electrical Characteristics

The specifications shown below correspond to the respectively identified subgroup temperature (see Section 6.7). V+ = 1.7V to 3.6V, unless otherwise noted.

PARAMETER			CONDITIONS	SUBGROUP (1)	MIN	TYP	MAX	UNIT
TEMPERATURE MEASUREMENT								
T_{LOCAL}	Local temperature sensor accuracy			[1, 2, 3]	–2	±0.5	2	°C
T_{REMOTE}	Remote temperature sensor accuracy			[1, 2, 3]	–1.5	±0.125	1.5	°C
T_{ERROR_PS}	Temperature Error Supply Sensitivity (Local or remote)		V+ = 1.7V to 3.6V	[1, 2, 3]	-0.3	±0.1	0.3	°C/V
T_{RES}	Temperature resolution (local and remote)					0.0625		°C
	ADC resolution			[4, 5, 6]		12		Bits
t_{CONV}	ADC conversion time		One-shot mode, per channel (local or remote)	[9, 10, 11]		15	17	ms
R_{SERIES}	Remote sensor source current	High	Series resistance 1kΩ (max)	[1, 2, 3]	85	120	155	µA
		Medium		[1, 2, 3]	30	45	60	
		Low		[1, 2, 3]	5	7.5	10	
η	Remote transistor ideality factor		TMP9R01-SEP/TMP9R01-SP optimized ideality factor			1.008		
SERIAL INTERFACE (SCL, SDA)								
V_{IH}	High-level input voltage			[1, 2, 3]	1.4			V
V_{IL}	Low-level input voltage			[1, 2, 3]			0.45	V
V_{HYST}	Hysteresis					200		mV
	SDA output-low sink current			[1, 2, 3]	6			mA
V_{OL}	Low-level output voltage		I_O = –6mA	[1, 2, 3]		0.15	0.4	V
I_{IN}	Serial bus input leakage current		0V ≤ V_{IN} ≤ 3.6V	[1, 2, 3]	–1		1	µA
C_{IN}	Serial bus input capacitance		SCL			3.5		pF
			SDA			5		
	Serial bus clock frequency			[9, 10, 11]			2.17	MHz
	Serial bus timeout			[9, 10, 11]	20	25	30	ms
DIGITAL INPUTS (A0, A1)								
V_{IH}	High-level input voltage			[1, 2, 3]	0.9×(V+)		(V+) + 0.3	V
V_{IL}	Low-level input voltage			[1, 2, 3]	–0.3		0.1×(V+)	V
I_{IN}	Input leakage current		0V ≤ V_{IN} ≤ 3.6V	[1, 2, 3]	–1		1	µA
C_{IN}	Input capacitance					4.5		pF
DIGITAL OUTPUTS ($\overline{THERM1}$, $\overline{ALERT}$/THERM2)								
	Output-low sink current			[1, 2, 3]	6			mA
V_{OL}	Low-level output voltage		I_O = –6mA	[1, 2, 3]		0.15	0.4	V
I_{OH}	High-level output leakage current		V_O = V+	[1, 2, 3]			1	µA
POWER SUPPLY								
V+	Specified supply voltage range			[1, 2, 3]	1.7		3.6	V
I_Q	Quiescent current		Active conversion, local sensor	[1, 2, 3]		240	375	µA
			Active conversion, remote sensors	[1, 2, 3]		400	600	
			Standby mode (between conversions), TMP9R01-SEP	[1, 2, 3]		15	35	
			Standby mode (between conversions), TMP9R01-SP	[1, 2, 3]		15	50	
			Shutdown mode, serial bus inactive, TMP9R01-SEP	[1, 2, 3]		3	8	
			Shutdown mode, serial bus inactive, TMP9R01-SP	[1, 2, 3]		3	25	
			Shutdown mode, serial bus active, f_S = 400kHz			90		
			Shutdown mode, serial bus active, f_S = 2.17MHz			350		

Copyright © 2026 Texas Instruments Incorporated

The specifications shown below correspond to the respectively identified subgroup temperature (see Section 6.7). V+ = 1.7V to 3.6V, unless otherwise noted.

PARAMETER		CONDITIONS	SUBGROUP (1)	MIN	TYP	MAX	UNIT
POR	Power-on reset threshold	Rising edge	[1, 2, 3]		1.41	1.55	V

(1) Tested with less than a 5Ω effective series resistance and a 100pF differential input capacitance.

6.6 I²C Interface Timing

At –55°C to 125°C and V+ = 1.7V to 3.6V, unless otherwise noted.

		FAST MODE		FAST MODE PLUS		HIGH-SPEED MODE		UNIT
		MIN	MAX	MIN	MAX	MIN	MAX	
$f_{(SCL)}$	SCL operating frequency	0.001	0.4	0.001	1	0.001	2.17	MHz
$t_{(BUF)}$	Bus-free time between STOP and START conditions	1300	–	500		160	–	ns
$t_{(HDSTA)}$	Hold time after repeated START condition. After this period, the first clock is generated.	600	–	260		160	–	ns
$t_{(SUSTA)}$	Repeated START condition setup time	600	–	260		160	–	ns
$t_{(SUSTO)}$	STOP condition setup time	600	–	260		160	–	ns
$t_{(HDDAT)}$	Data hold time	0	900	0	150	0	130	ns
$t_{(SUDAT)}$	Data setup time	100	–	50		20	–	ns
$t_{(LOW)}$	SCL clock low period	1300	–	500		320	–	ns
$t_{(HIGH)}$	SCL clock high period	600	–	260		60	–	ns
t_F - SDA	Data fall time		300		120		130	ns
t_F, t_R- SCL	Clock fall and rise time		300	–	120		40	ns
t_R	Rise time for SCL ≤ 100kHz		1000					ns

6.7 Quality Conformance Inspection

MIL-STD-883, Method 5005 - Group A

SUBGROUP	DESCRIPTION	TEMPERATURE (°C)
1	Static tests	25
2	Static tests	125
3	Static tests	–55
4	Dynamics tests	25
5	Dynamics tests	125
6	Dynamics tests	–55
7	Functional tests	25
8A	Functional tests	125
8B	Functional tests	–55
9	Switching tests	25
10	Switching tests	125
11	Switching tests	–55

Copyright © 2026 Texas Instruments Incorporated

6.8 Timing Diagrams

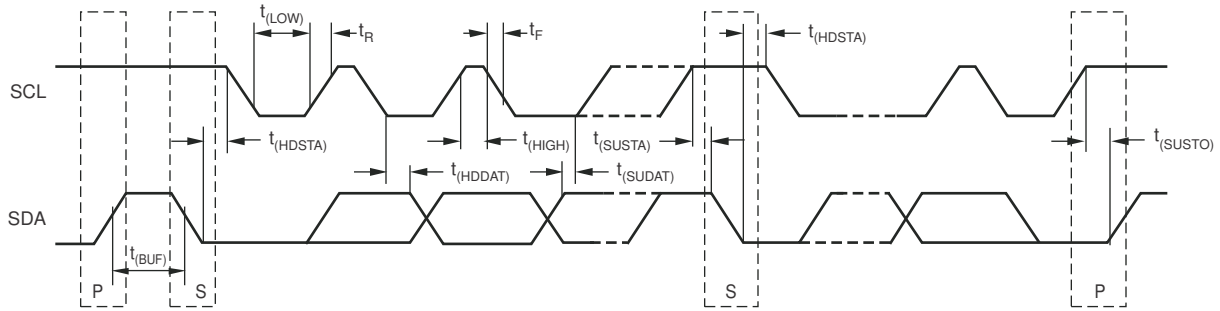

Figure 6-1. Two-Wire Timing Diagram

6.9 Typical Characteristics

At T_A = 25°C and V+ = 3.6V, unless otherwise noted.

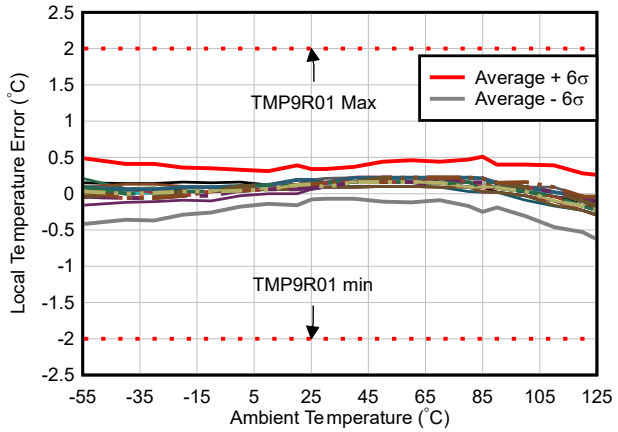

Figure 6-2. Local Temperature Error vs Ambient Temperature

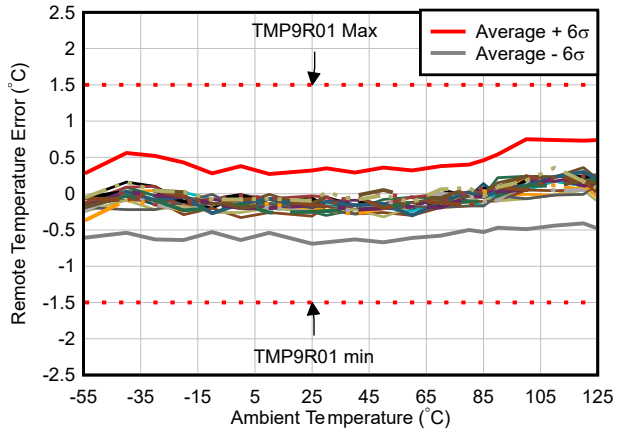

Figure 6-3. Remote Temperature Error vs Ambient Temperature

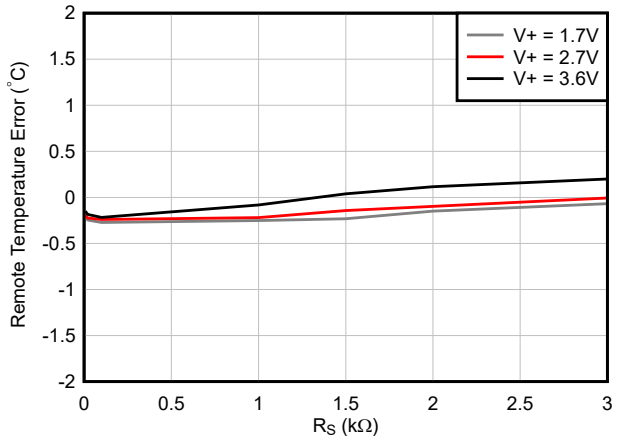

Figure 6-4. Remote Temperature Error vs Series Resistance (Diode-Connected PNP Transistor, 2N3906)

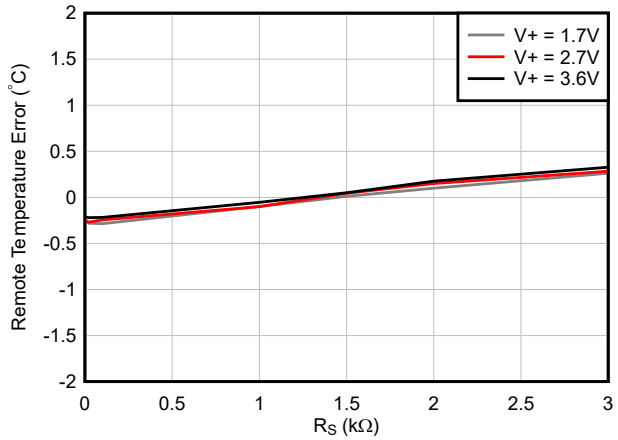

Figure 6-5. Remote Temperature Error vs Series Resistance (GND Collector-Connected PNP Transistor, 2N3906)

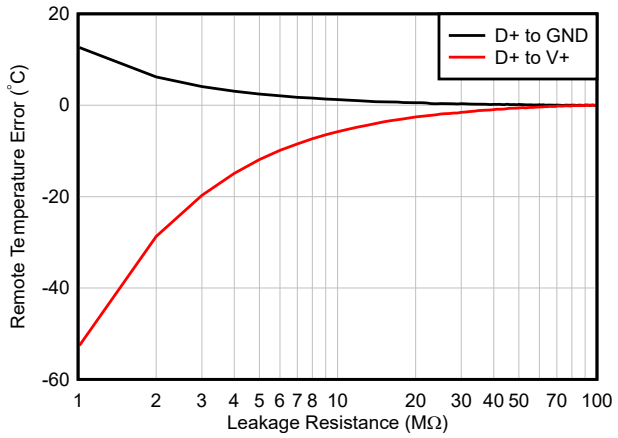

Figure 6-6. Remote Temperature Error vs Leakage Resistance

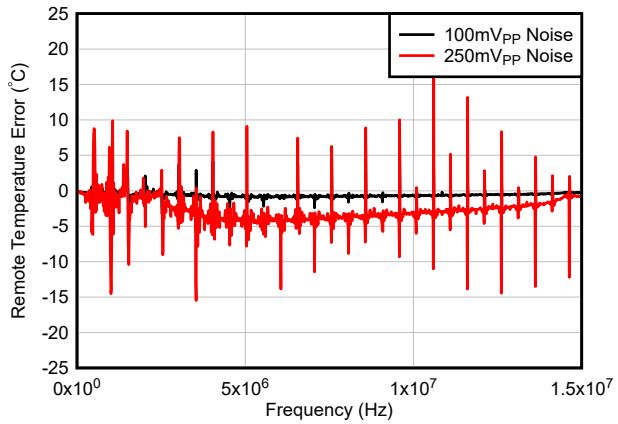

Figure 6-7. Remote Temperature Error vs Power-Supply Noise Frequency

Copyright © 2026 Texas Instruments Incorporated

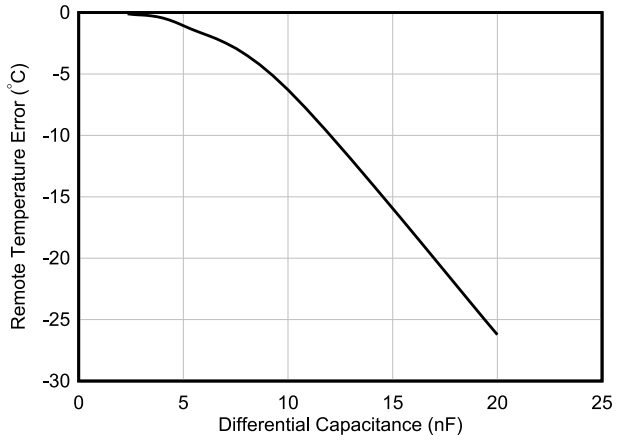

No physical series resistance on D+, D– pins during measurement

Figure 6-8. Remote Temperature Error vs Differential Capacitance

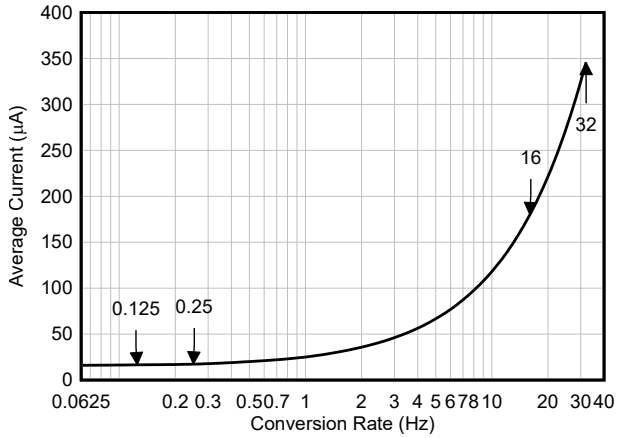

Figure 6-9. Average Current vs Conversion Rate

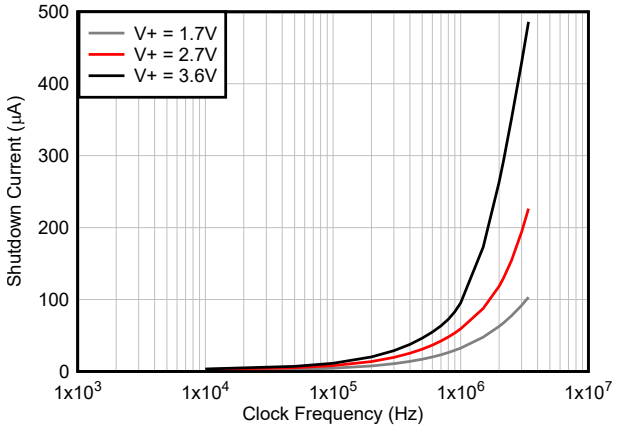

Figure 6-10. Shutdown Current vs SCL Clock Frequency

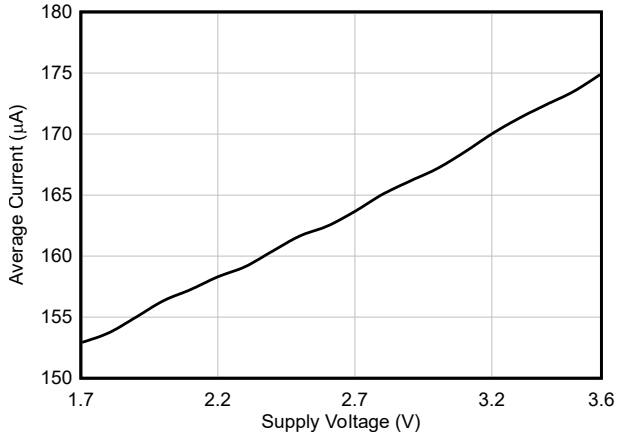

Figure 6-11. Average Current vs Supply Voltage (At Default Conversion Rate of 16Hz)

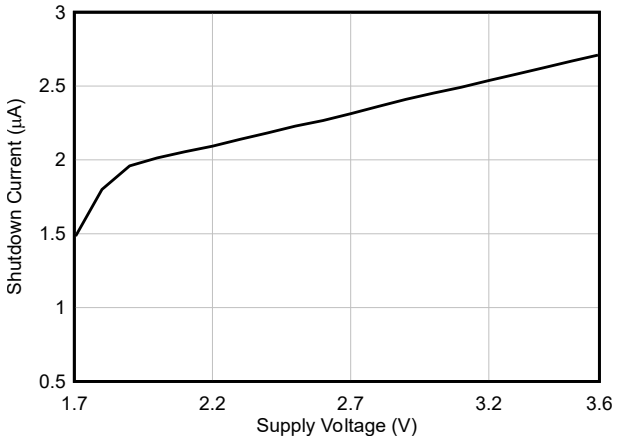

Figure 6-12. Shutdown Current vs Supply Voltage (serial bus inactive)

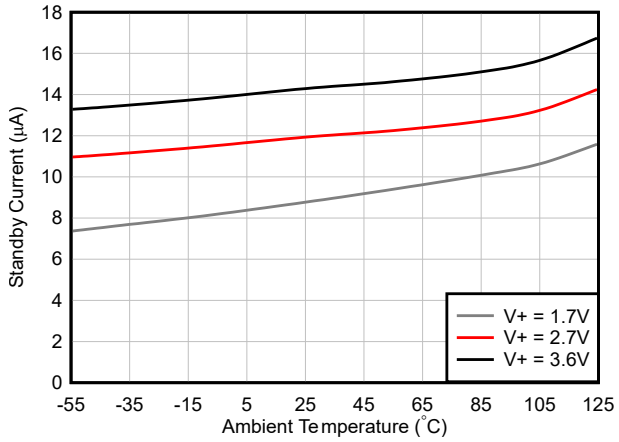

Figure 6-13. Standby Current vs Temperature

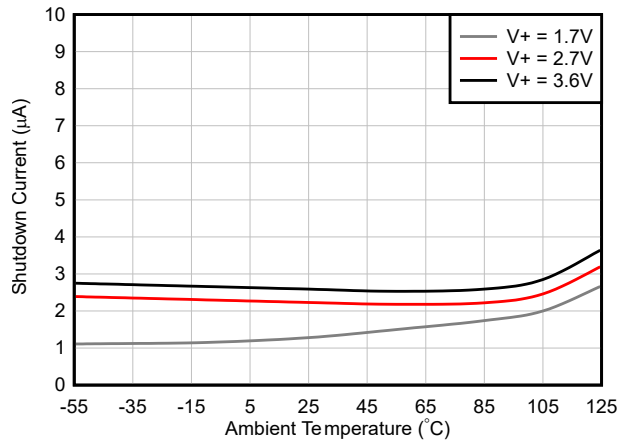

Figure 6-14. Shutdown Current vs Temperature

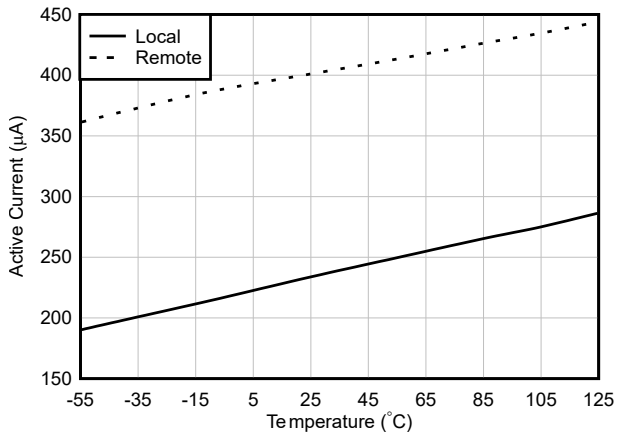

Figure 6-15. Active Current vs Temperature (Local and Remote)

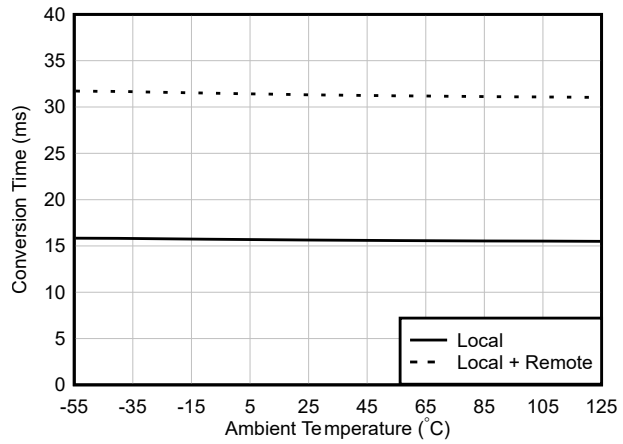

Figure 6-16. Conversion Time vs Temperature (Local and Local + Remote)

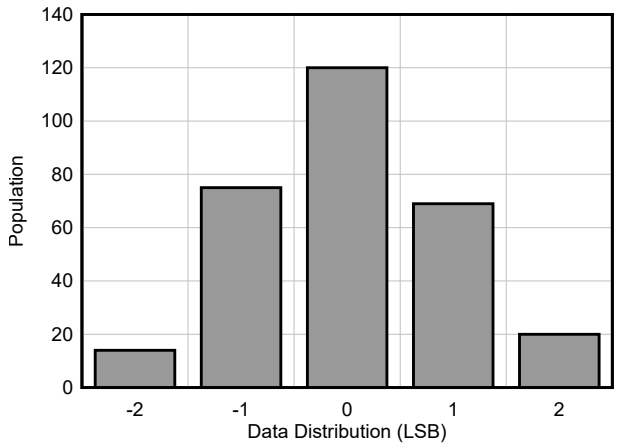

Figure 6-17. Remote Temperature Noise Data Distribution (300 Samples)

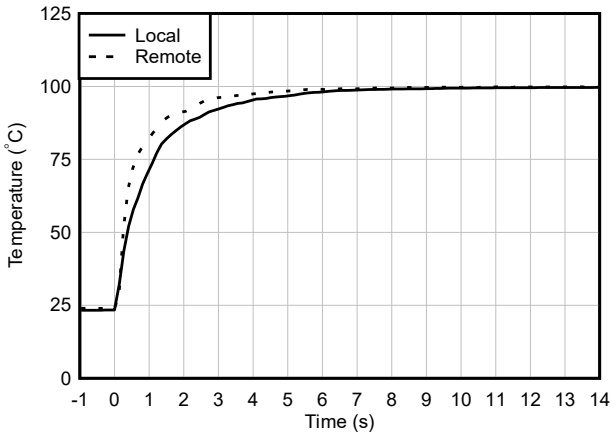

Local: soldered devices on 62mil 2-layer FR4 PCB
Remote: characterized with 2N3906 PNP Transistor

Figure 6-18. Temperature Thermal Response (Stirred Liquid)

Copyright © 2026 Texas Instruments Incorporated

7 Detailed Description

7.1 Overview

The TMP9R01-SEP and TMP9R01-SP device is a digital temperature sensor that combines a local temperature measurement channel and a remote-junction temperature measurement channel in a single VSSOP DGS-10 package. The device is two-wire- and SMBus-interface-compatible with nine pin-programmable bus address options, and is specified over a temperature range of –55°C to 125°C. The TMP9R01-SEP and TMP9R01-SP device also contains multiple registers for programming and holding configuration settings, temperature limits, and temperature measurement results.

The TMP9R01-SEP and TMP9R01-SP requires only a transistor connected between D+ and D– for proper remote temperature sensing operation. The SCL and SDA interface pins require pullup resistors as part of the communication bus, while $\overline{\text{ALERT}}$ and $\overline{\text{THERM}}$ pins are open-drain outputs that require pullup resistors. $\overline{\text{ALERT}}$ and $\overline{\text{THERM}}$ pins can be shared with other devices for a wired-OR implementation, if desired. TI recommends using a 0.1µF power-supply bypass capacitor for good local bypassing. Figure 7-1 shows a typical configuration for the TMP9R01-SEP and TMP9R01-SP.

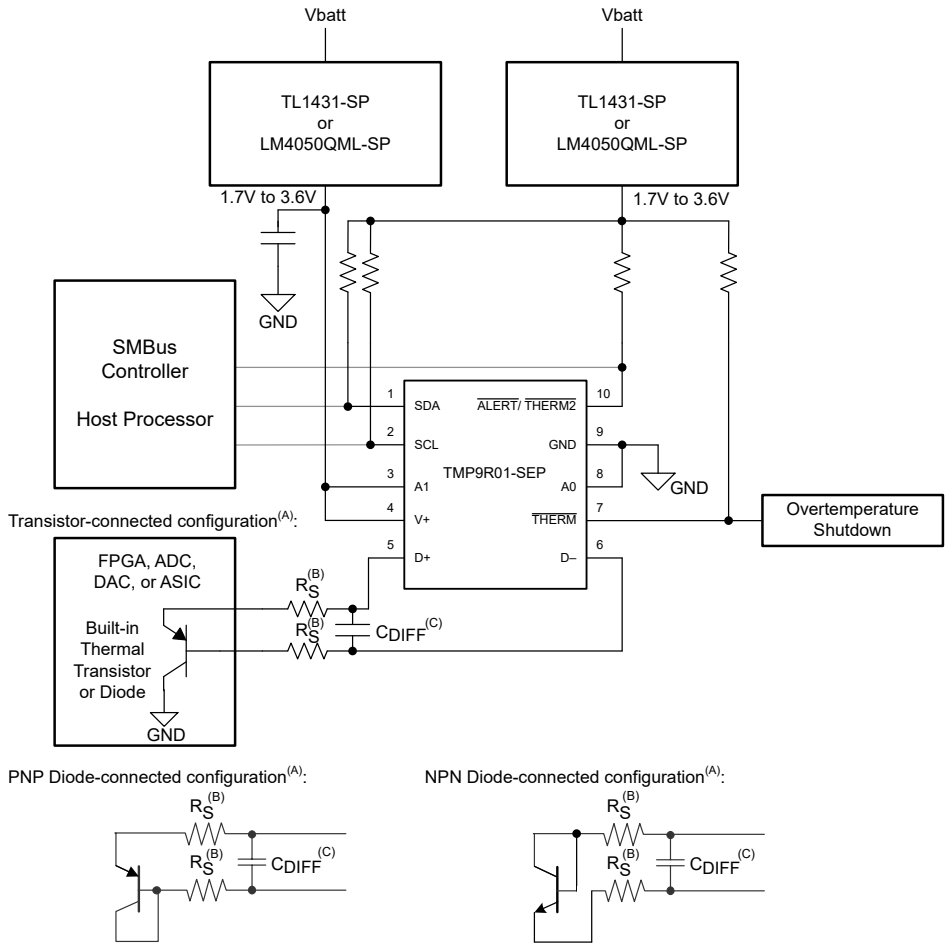

Figure 7-1. Basic Connections

A. Diode-connected configuration provides better settling time. Transistor-connected configuration provides better series resistance cancellation. NPN transistors must be diode-connected. PNP transistors can either be transistor or diode-connected. For more information on NPN/PNP transistors see Remote Temperature Sensor Transistor Selection Guide application note.

B. R_s (optional) must be < 1kΩ in most applications. Selections of R_s depends on specific applications; see the Section 7.3.5

C. C_{DIFF} (optional) must be < 1000pF in most applications. Selection of C_{DIFF} depends on specific application; see the Section 7.3.5 and Figure 6-8.

7.2 Functional Block Diagram

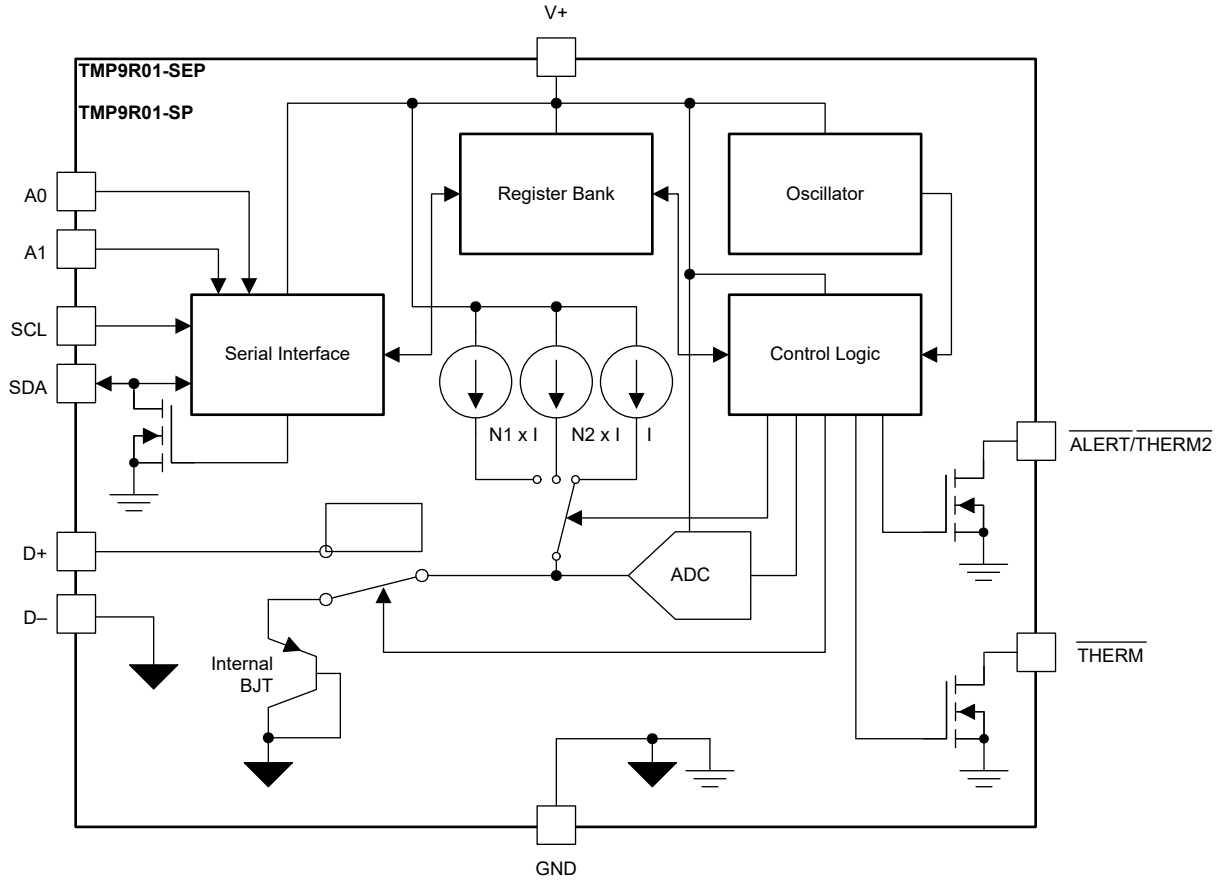

Figure 7-2. Functional Block Diagram

7.3 Feature Description

7.3.1 Temperature Measurement Data

The local and remote temperature sensors have a resolution of 12 bits (0.0625°C). Temperature data that result from conversions within the default measurement range are represented in binary form, as shown in the *Standard Binary* column of Table 7-1. Any temperatures above 127°C result in a value that rails to 127.9375 (7FFh). The device can be set to measure over an extended temperature range by changing bit 2 (RANGE) of the configuration register from low to high. The change in measurement range and data format from standard binary to extended binary occurs at the next temperature conversion. For data captured in the extended temperature range configuration, an offset of 64 (40h) is added to the standard binary value, as shown in the *Extended Binary* column of Table 7-1. This configuration allows measurement of temperatures as low as –64°C, and as high as 191°C. However, most temperature-sensing diodes only operate within the range of –55°C to 150°C. Additionally, the TMP9R01-SEP and TMP9R01-SP are specified only for ambient temperatures ranging from –55°C to 125°C; parameters in the *Section 6.1* table must be observed.

Copyright © 2026 Texas Instruments Incorporated

Table 7-1. Temperature Data Format (Local and Remote Temperature High Bytes)

TEMPERATURE (°C)	LOCAL AND REMOTE TEMPERATURE REGISTER HIGH BYTE VALUE (1°C Resolution)			
	STANDARD BINARY[1]		EXTENDED BINARY[2]	
	BINARY	HEX	BINARY	HEX
–64	1100 0000	C0	0000 0000	00
–50	1100 1110	CE	0000 1110	0E
–25	1110 0111	E7	0010 0111	27
0	0000 0000	00	0100 0000	40
1	0000 0001	01	0100 0001	41
5	0000 0101	05	0100 0101	45
10	0000 1010	0A	0100 1010	4A
25	0001 1001	19	0101 1001	59
50	0011 0010	32	0111 0010	72
75	0100 1011	4B	1000 1011	8B
100	0110 0100	64	1010 0100	A4
125	0111 1101	7D	1011 1101	BD
127	0111 1111	7F	1011 1111	BF
150	0111 1111	7F	1101 0110	D6
175	0111 1111	7F	1110 1111	EF
191	0111 1111	7F	1111 1111	FF

(1) Resolution is 1°C per count. Negative numbers are represented in 2's complement format.
(2) Resolution is 1°C per count. All values are unsigned with a –64°C offset.

Both local and remote temperature data use two bytes for data storage. The high byte stores the temperature with 1°C resolution. The second or low byte stores the decimal fraction value of the temperature and allows a higher measurement resolution, as shown in Table 7-2. The measurement resolution for both the local and the remote channels is 0.0625°C.

Table 7-2. Decimal Fraction Temperature Data Format (Local and Remote Temperature Low Bytes)

TEMPERATURE (°C)	TEMPERATURE REGISTER LOW BYTE VALUE (0.0625°C Resolution)[1]	
	STANDARD AND EXTENDED BINARY	HEX
0	0000 0000	00
0.0625	0001 0000	10
0.1250	0010 0000	20
0.1875	0011 0000	30
0.2500	0100 0000	40
0.3125	0101 0000	50
0.3750	0110 0000	60
0.4375	0111 0000	70
0.5000	1000 0000	80
0.5625	1001 0000	90
0.6250	1010 0000	A0
0.6875	1011 0000	B0
0.7500	1100 0000	C0
0.8125	1101 0000	D0
0.8750	1110 0000	E0
0.9375	1111 0000	F0

(1) Resolution is 0.0625°C per count. All possible values are shown.

Copyright © 2026 Texas Instruments Incorporated

7.3.2 Decoding Temperature Data

The TMP9R01-SEP and TMP9R01-SP temperature registers use a 12-bit format. The 12 bits are aligned to the left side, or most significant side, of the 16-bit word. The four unused bits are on the right side, or the least significant side. For this reason, a shift is needed to discard the extra bits. 2's complement is employed to describe negative temperatures. C code can easily convert the 2's complement data when the data is typecast into the correct signed data type. Q notation describes the number of bits that represent a fractional result. 4 bits of fractional data, known as Q4, offers 0.0625°C resolution.

Table 7-3. 12-Bit Q4 Encoding Parameters

Parameter	Value
Bits	12
Q	4
Resolution	0.0625
Range (+)	127.9375
Range (-)	-128
First Byte Integer C	Yes
25˚C	0x1900

Table 7-4. 12-Bit Q4 Bit Values

15	14	13	12	11	10	9	8	7	6	5	4	3	2	1	0
Sign	64	32	16	8	4	2	1	0.5	0.25	0.125	0.0625	-	-	-	-
-128	64	32	16	8	4	2	1	1/2	1/4	1/8	1/16	-	-	-	-
-2^7	2^6	2^5	2^4	2^3	2^2	2^1	2^0	2^{-1}	2^{-2}	2^{-3}	2^{-4}	-	-	-	-

```
/* 12-bit format has 4 bits discarded by right shift
   q4 is 0.062500 resolution
   the following bytes represent 24.5C */
uint8_t byte1 = 0x18;
uint8_t byte2 = 0x80;
float f = (((int8_t) byte1 << 8 | byte2) >> 4) * 0.0625f;
int mC = (((int8_t) byte1 << 8 | byte2) >> 4) * 1000 >> 4;
int C = (int8_t) byte1;
```

7.3.3 Series Resistance Cancellation

Series resistance cancellation automatically eliminates the temperature error caused by the resistance of the routing to the remote transistor or by the resistors of the optional external low-pass filter. A total of up to 1kΩ of series resistance can be cancelled by the TMP9R01-SEP and TMP9R01-SP devices, thus eliminating the need for additional characterization and temperature offset correction. See Figure 6-4 and Figure 6-5 for details on the effects of series resistance on sensed remote temperature error.

7.3.4 Differential Input Capacitance

The TMP9R01-SEP and TMP9R01-SP devices tolerate differential input capacitance of up to 1000pF with minimal change in temperature error. The effect of capacitance on the sensed remote temperature error is illustrated in Figure 6-8 (*Remote Temperature Error vs Differential Capacitance*).

7.3.5 Filtering

Remote junction temperature sensors are typically implemented in a noisy environment. Noise is most often created by fast digital signals that can corrupt measurements. The TMP9R01-SEP and TMP9R01-SP devices have a built-in, 65kHz filter on the D+ and D– inputs to minimize the effects of noise. However, a bypass capacitor placed differentially across the inputs of the remote temperature sensor is recommended to make the application more robust against unwanted coupled signals. For this capacitor, select a value between 100pF

Copyright © 2026 Texas Instruments Incorporated

differential and 1nF. Some applications attain better overall accuracy with additional series resistance. However, this increased accuracy is application-specific. When series resistance is added, the total value must not be greater than 1kΩ. If filtering is required, suggested component values are 100pF differential and 50Ω on each input; exact values are application-specific.

Additionally, a digital filter is available for the remote temperature measurements to further reduce the effect of noise. This filter is programmable and has two levels when enabled. Level 1 performs a moving average of four consecutive samples. Level 1 filtering can be achieved by setting the digital filter control register (read address 24h, write address 24h) to 01h. Level 2 performs a moving average of eight consecutive samples. Level 2 filtering can be achieved by setting the digital filter control register (read address 24h, write address 24h) to 02h. The value stored in the remote temperature result register is the output of the digital filter, and is the value that the $\overline{\text{ALERT}}$ and $\overline{\text{THERM}}$ limits are compared to. The digital filter provides additional immunity to noise and spikes on the $\overline{\text{ALERT}}$ and $\overline{\text{THERM}}$ outputs. The filter responses to impulse and step inputs are shown in Figure 7-3 and Figure 7-4, respectively. The filter can be enabled or disabled by programming the desired levels in the digital filter register; see Table 8-1. The digital filter is disabled by default and on POR.

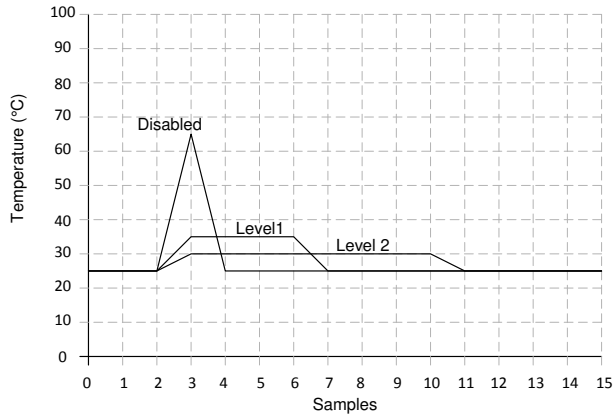

Figure 7-3. Filter Response to Impulse Inputs

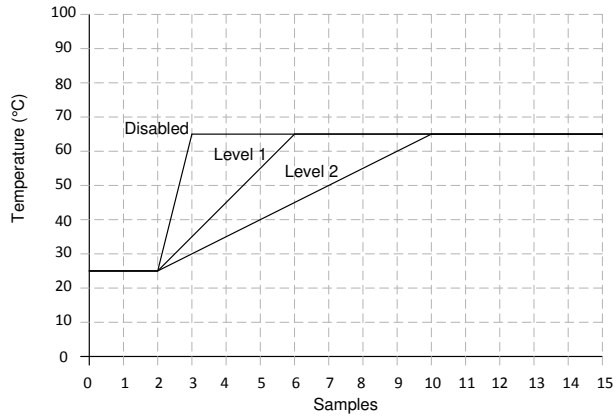

Figure 7-4. Filter Response to Step Inputs

7.3.6 Sensor Fault

The TMP9R01-SEP and TMP9R01-SP devices can sense a fault at the D+ input resulting from an incorrect diode connection. The TMP9R01-SEP and TMP9R01-SP devices can also sense an open circuit. Short-circuit conditions return a value of –64°C. The detection circuitry consists of a voltage comparator that trips when the voltage at D+ exceeds (V+) – 0.3V (typical). The comparator output is continuously checked during a conversion. If a fault is detected, then OPEN (bit 2) in the status register is set to 1.

When not using the remote sensor with the TMP9R01-SEP and TMP9R01-SP devices, D+ must be connected to D– or GND to prevent meaningless fault warnings.

7.3.7 $\overline{\text{ALERT}}$ and $\overline{\text{THERM}}$ Functions

Operation of the $\overline{\text{ALERT}}$ (pin 10) and $\overline{\text{THERM}}$ (pin 7) interrupts is shown in Figure 7-5. Operation of the $\overline{\text{THERM}}$ (pin 7) and $\overline{\text{THERM2}}$ (pin 10) interrupts is shown in Figure 7-6. The $\overline{\text{ALERT}}$ and $\overline{\text{THERM}}$ pin setting is determined by bit 5 of the configuration register.

The hysteresis value is stored in the $\overline{\text{THERM}}$ hysteresis register and applies to both the $\overline{\text{THERM}}$ and $\overline{\text{THERM2}}$ interrupts. The value of the CONAL[2:0] bits in the consecutive $\overline{\text{ALERT}}$ register (see Table 8-1) determines the number of limit violations before the $\overline{\text{ALERT}}$ pin is tripped. The default value is 000b and corresponds to one violation, 001b programs two consecutive violations, 011b programs three consecutive violations, and 111b programs four consecutive violations. The CONAL[2:0] bits provide additional filtering for the $\overline{\text{ALERT}}$ pin state.

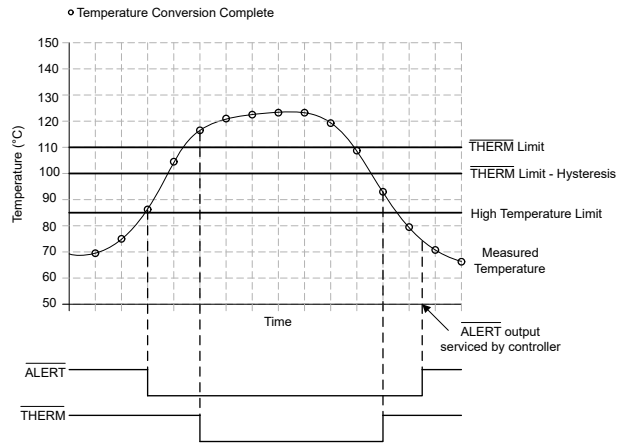

Figure 7-5. ALERT and THERM Interrupt Operation

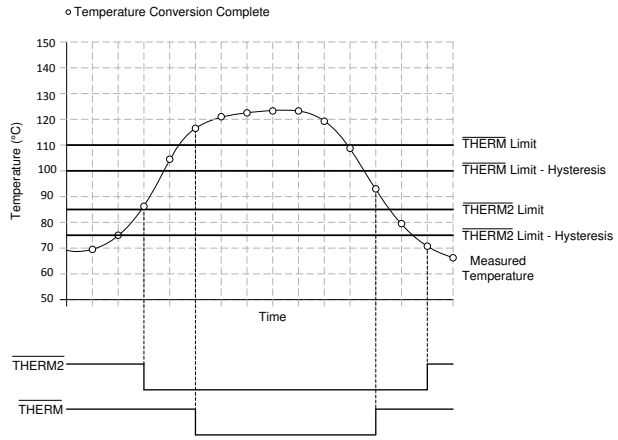

Figure 7-6. THERM and THERM2 Interrupt Operation

7.4 Device Functional Modes

7.4.1 Shutdown Mode (SD)

The TMP9R01-SEP and TMP9R01-SP shutdown mode enables the user to save maximum power by shutting down all device circuitry other than the serial interface, and reducing current consumption to typically less than 3µA; see Figure 6-12 (*Shutdown Quiescent Current vs Supply Voltage*). Shutdown mode is enabled when the SD bit (bit 6) of the configuration register is high; the device shuts down after the current conversion is finished. When the SD bit is low, the device maintains a continuous-conversion state.

7.5 Programming

7.5.1 Serial Interface

The TMP9R01-SEP and TMP9R01-SP devices operate only as a target device on either the two-wire bus or the SMBus. Connections to either bus are made using the open-drain I/O lines, SDA and SCL. The SDA and SCL pins feature integrated spike suppression filters and Schmitt triggers to minimize the effects of input spikes and bus noise. The TMP9R01-SEP and TMP9R01-SP devices support the transmission protocol for fast (1kHz to 400kHz) and high-speed (1kHz to 2.17MHz) modes. All data bytes are transmitted MSB first.

7.5.1.1 Bus Overview

The TMP9R01-SEP and TMP9R01-SPdevices are SMBus-interface-compatible. In the SMBus protocol, the device that initiates the transfer is called a *controller*, and the devices controlled by the controller are *targets*. The bus must be controlled by a controller device that generates the serial clock (SCL), controls the bus access, and generates the start and stop conditions.

To address a specific device, a start condition is initiated. A start condition is indicated by pulling the data line (SDA) from a high-to-low logic level when SCL is high. All targets on the bus shift in the target address byte, with the last bit indicating whether a read or write operation is intended. During the ninth clock pulse, the target being addressed responds to the controller by generating an *acknowledge* bit and pulling SDA low.

Data transfer is then initiated and sent over eight clock pulses, followed by an acknowledge bit. During data transfer, SDA must remain stable when SCL is high. A change in SDA when SCL is high is interpreted as a control signal.

After all data is transferred, the controller generates a stop condition. A stop condition is indicated by pulling SDA from low to high when SCL is high.

Copyright © 2026 Texas Instruments Incorporated

7.5.1.2 Bus Definitions

The TMP9R01-SEP and TMP9R01-SP device are two-wire- and SMBus-compatible. Figure 7-7 and Figure 7-8 illustrate the timing for various operations on the TMP9R01-SEP and TMP9R01-SP devices. The bus definitions are as follows:

Bus Idle: Both SDA and SCL lines remain high.

Start Data Transfer: A change in the state of the SDA line (from high to low) when the SCL line is high defines a start condition. Each data transfer initiates with a start condition.

Stop Data Transfer: A change in the state of the SDA line (from low to high) when the SCL line is high defines a stop condition. Each data transfer terminates with a repeated start or stop condition.

Data Transfer: The number of data bytes transferred between a start and stop condition is not limited and is determined by the controller device. The receiver acknowledges the data transfer.

Acknowledge: Each receiving device, when addressed, is obliged to generate an acknowledge bit. A device that acknowledges must pull down the SDA line during the acknowledge clock pulse in such a way that the SDA line is stable low during the high period of the acknowledge clock pulse. Take setup and hold times into account. On a controller receive, data transfer termination can be signaled by the controller generating a not-acknowledge on the last byte that is transmitted by the target.

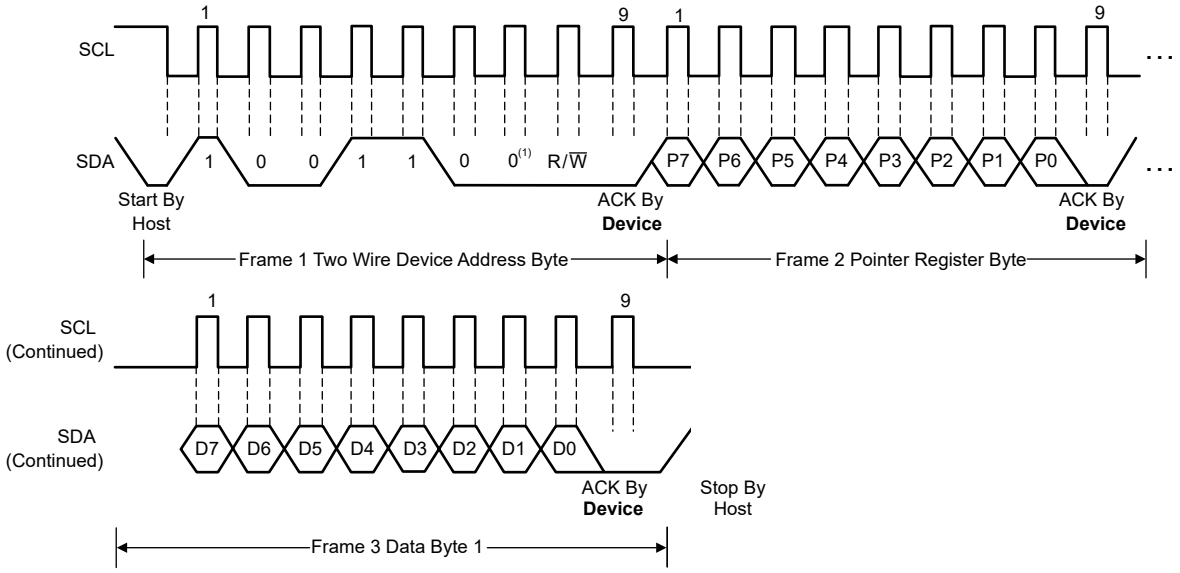

A. Target address 1001100 is shown.

Figure 7-7. Two-Wire Timing Diagram for Write Word Format

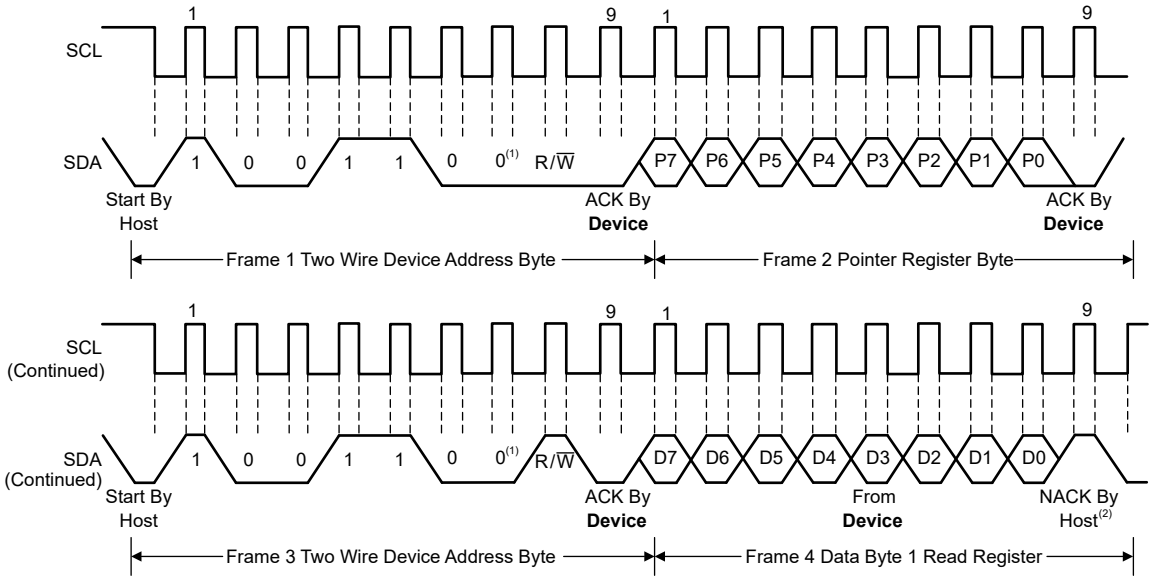

A. Target address 1001100 is shown.

B. The controller must leave SDA high to terminate a single-byte read operation.

Figure 7-8. Two-Wire Timing Diagram for Single-Byte Read Format

7.5.1.3 Serial Bus Address

To communicate with the TMP9R01-SEP and TMP9R01-SP devices, the controller must first address target devices using a target address byte. The target address byte consists of seven address bits and a direction bit indicating the intent of executing a read or write operation. The TMP9R01-SEP and TMP9R01-SP devices allow up to nine devices to be connected to the SMBus, depending on the A0, A1 pin connections as described in Table 7-5. The A0 and A1 address pins must be isolated from noisy or high-frequency signals traces to avoid false address settings when these pins are set to a float state.

Table 7-5. TMP9R01-SEP and TMP9R01-SP Target Address Options

A1 CONNECTION	A0 CONNECTION	TARGET ADDRESS	
		BINARY	HEX
GND	GND	1001 000	48
GND	Float	1001 001	49
GND	V+	1001 010	4A
Float	GND	1001 011	4B
Float	Float	1001 100	4C
Float	V+	1001 101	4D
V+	GND	1001 110	4E
V+	Float	1001 111	4F
V+	V+	1010 000	50

7.5.1.4 Read and Write Operations

Accessing a particular register on the TMP9R01-SEP and TMP9R01-SP devices are accomplished by writing the appropriate value to the pointer register. The value for the pointer register is the first byte transferred after the target address byte with the R/$\overline{W}$ bit low. Every write operation to the TMP9R01-SEP and TMP9R01-SP devices require a value for the pointer register (see Figure 7-7).

When reading from the TMP9R01-SEP and TMP9R01-SP devices, the last value stored in the pointer register by a write operation is used to determine which register is read by a read operation. To change which register is

Copyright © 2026 Texas Instruments Incorporated

read for a read operation, a new value must be written to the pointer register. This transaction is accomplished by issuing a target address byte with the R/$\overline{W}$ bit low, followed by the pointer register byte; no additional data are required. The controller can then generate a start condition and send the target address byte with the R/$\overline{W}$ bit high to initiate the read command; see Figure 7-8 for details of this sequence.

If repeated reads from the same register are desired, continually sending the pointer register bytes is not necessary because the TMP9R01-SEP and TMP9R01-SP devices retain the pointer register value until the value is changed by the next write operation. The register bytes are sent MSB first, followed by the LSB. However, to mitigate the effects of single-event upsets and single-event functional interrupts, write the appropriate value to the pointer register each time a read operation is performed. Relying on the last value stored in the pointer register can increase the probability of a failed read due to a single event upset.

Note

During the exposure time, all I^2C registers can be continuously read. However, resetting TMP9R01-SEP and TMP9R01-SP devices before every read is recommended. Without resetting the device, there is a chance the TMP9R01-SEP and TMP9R01-SP devices perform not as accurately as expected.

Terminate read operations by issuing a *not-acknowledge* command at the end of the last byte to be read. For a single-byte operation, the controller must leave the SDA line high during the acknowledge time of the first byte that is read from the target.

7.5.1.5 Timeout Function

The TMP9R01-SEP and TMP9R01-SP devices reset the serial interface if either SCL or SDA is held low for 25ms (typical) between a start and stop condition. If the TMP9R01-SEP and TMP9R01-SP devices are holding the bus low, the devices release the bus and waits for a start condition. To avoid activating the timeout function, maintaining a communication speed of at least 1kHz for the SCL operating frequency is necessary.

7.5.1.6 High-Speed Mode

For the two-wire bus to operate at frequencies above 1MHz, the controller device must issue a high-speed mode (HS-mode) controller code (0000 1xxx) as the first byte after a start condition to switch the bus to high-speed operation. The TMP9R01-SEP and TMP9R01-SP devices do not acknowledge this byte, but switch the input filters on SDA and SCL and the output filter on SDA to operate in HS-mode, thus allowing transfers at up to 2.17MHz. After the HS-mode controller code is issued, the controller transmits a two-wire target address to initiate a data transfer operation. The bus continues to operate in HS-mode until a stop condition occurs on the bus. Upon receiving the stop condition, the TMP9R01-SEP and TMP9R01-SP devices switch the input and output filters back to fast mode operation.

7.5.2 General-Call Reset

The TMP9R01-SEP and TMP9R01-SP devices support reset using the two-wire general-call address 00h (0000 0000b). The device acknowledges the general-call address and responds to the second byte. If the second byte is 06h (0000 0110b), the device executes a software reset as shown in Figure 7-9. This software reset restores the power-on reset state to all registers and aborts any conversion in progress. The TMP9R01-SEP and TMP9R01-SP devices take no action in response to other values in the second byte.

Copyright © 2026 Texas Instruments Incorporated

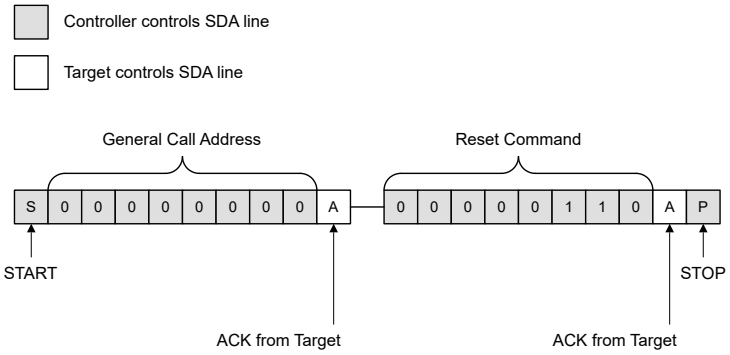

Figure 7-9. SMBus General Call Reset Timing Diagram

Copyright © 2026 Texas Instruments Incorporated

8 Register Map

Table 8-1. Register Map

POINTER READ (HEX)	POINTER WRITE (HEX)	POR (HEX)	BIT DESCRIPTION								REGISTER DESCRIPTION
			7	6	5	4	3	2	1	0	
00	N/A	00	LT11	LT10	LT9	LT8	LT7	LT6	LT5	LT4	Local Temperature Register (high byte)
01	N/A	00	RT11	RT10	RT9	RT8	RT7	RT6	RT5	RT4	Remote Temperature Register (high byte)
02	N/A	N/A	BUSY	LHIGH	LLOW	RHIGH	RLOW	OPEN	RTHRM	LTHRM	Status Register
03	09	00	MASK1	SD	$\overline{\text{ALERT}}$/ $\overline{\text{THERM2}}$	0	0	RANGE	0	0	Configuration Register
04	0A	08	0	0	0	0	CR3	CR2	CR1	CR0	Conversion Rate Register
05	0B	7F	LTHL11	LTHL10	LTHL9	LTHL8	LTHL7	LTHL6	LTHL5	LTHL4	Local Temperature High Limit Register
06	0C	80	LTLL11	LTLL10	LTLL9	LTLL8	LTLL7	LTLL6	LTLL5	LTLL4	Local Temperature Low Limit Register
07	0D	7F	RTHL11	RTHL10	RTHL9	RTHL8	RTHL7	RTHL6	RTHL5	RTHL4	Remote Temperature High Limit Register (high byte)
08	0E	80	RTLL11	RTLL10	RTLL9	RTLL8	RTLL7	RTLL6	RTLL5	RTLL4	Remote Temperature Low Limit Register (high byte)
N/A	0F	N/A	X	X	X	X	X	X	X	X	One-Shot Start Register(1)
10	N/A	00	RT3	RT2	RT1	RT0	0	0	0	0	Remote Temperature Register (low byte)
11	11	00	RTOS11	RTOS10	RTOS9	RTOS8	RTOS7	RTOS6	RTOS5	RTOS4	Remote Temperature Offset Register (high byte)
12	12	00	RTOS3	RTOS2	RTOS1	RTOS0	0	0	0	0	Remote Temperature Offset Register (low byte)
13	13	F0	RTHL3	RTHL2	RTHL1	RTHL0	0	0	0	0	Remote Temperature High Limit Register (low byte)
14	14	00	RTLL3	RTLL2	RTLL1	RTLL0	0	0	0	0	Remote Temperature Low Limit Register (low byte)
15	N/A	00	LT3	LT2	LT1	LT0	0	0	0	0	Local Temperature Register (low byte)
16	16	03	0	0	0	0	0	0	REN	LEN	Channel Enable Register
19	19	7F	RTH11	RTH10	RTH9	RTH8	RTH7	RTH6	RTH5	RTH4	Remote Temperature $\overline{\text{THERM}}$ Limit Register
20	20	7F	LTH11	LTH10	LTH9	LTH8	LTH7	LTH6	LTH5	LTH4	Local Temperature $\overline{\text{THERM}}$ Limit Register
21	21	0A	HYS11	HYS10	HYS9	HYS8	HYS7	HYS6	HYS5	HYS4	$\overline{\text{THERM}}$ Hysteresis Register
22	22	01	0	0	0	0	CONAL2	CONAL1	CONAL0	1	Consecutive $\overline{\text{ALERT}}$ Register
23	23	00	NC7	NC6	NC5	NC4	NC3	NC2	NC1	NC0	η-Factor Correction Register
24	24	00	0	0	0	0	0	0	DF1	DF0	Digital Filter Control Register
FE	N/A	55	0	1	0	1	0	1	0	1	Manufacturer Identification Register

(1) X = undefined. Writing any value to this register initiates a one-shot start; see the *One-Shot Conversion* section.

Copyright © 2026 Texas Instruments Incorporated

8.1 Register Information

The TMP9R01-SEP and TMP9R01-SP devices contain multiple registers for holding configuration information, temperature measurement results, and status information. These registers are described in Figure 8-1 and Table 8-1.

8.1.1 Pointer Register

Figure 8-1 shows the internal register structure of the TMP9R01-SEP and TMP9R01-SP devices. The 8-bit pointer register is used to address a given data register. The pointer register identifies which of the data registers must respond to a read or write command on the two-wire bus. This register is set with every write command. A write command must be issued to set the proper value in the pointer register before executing a read command. Table 8-1 describes the pointer register and the internal structure of the registers. The power-on reset (POR) value of the pointer register is 00h (0000 0000b).

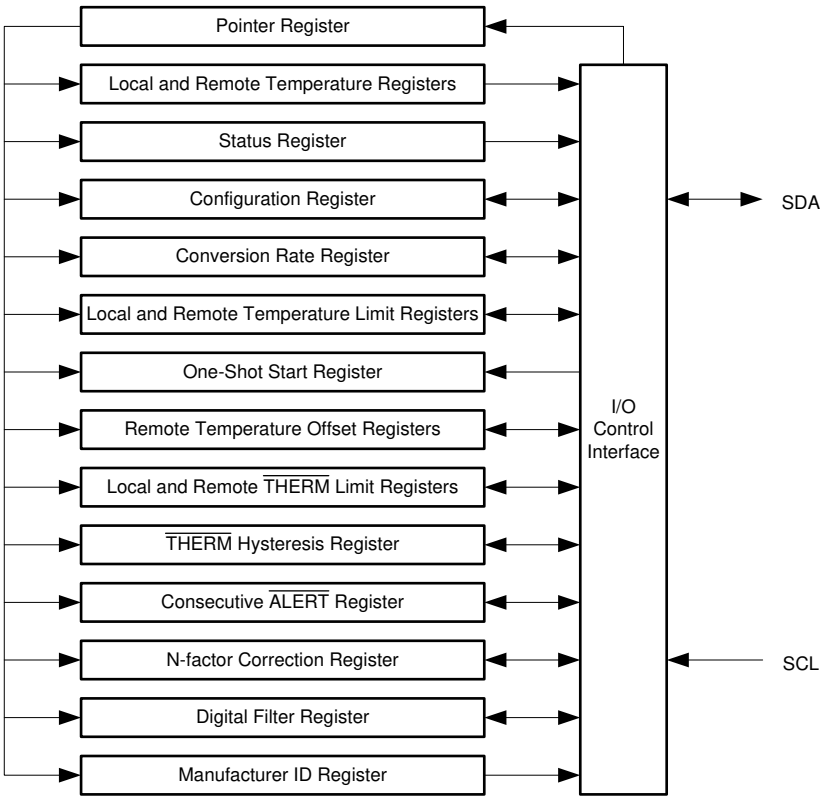

Figure 8-1. Internal Register Structure

8.1.2 Local and Remote Temperature Registers

The TMP9R01-SEP and TMP9R01-SP devices has multiple 8-bit registers that hold temperature measurement results. The eight most significant bits (MSBs) of the local temperature sensor result are stored in register 00h, and the four least significant bits (LSBs) are stored in register 15h (the four MSBs of register 15h). The eight MSBs of the remote temperature sensor result are stored in register 01h, and the four LSBs are stored in register 10h (the four MSBs of register 10h). The four LSBs of both the local and remote sensor indicate the temperature value after the decimal point (for example, if the temperature result is 10.0625°C, then the high byte is 0000 1010 and the low byte is 0001 0000). These registers are read-only and are updated by the ADC each time a temperature measurement is completed.

When the full temperature value is needed, reading the MSB value first causes the LSB value to be locked (the ADC does not write to the value) until the LSB value is read. The same thing occurs upon reading the LSB value first (the MSB value is locked until the value is read). This mechanism verifies that both bytes of the read operation are from the same ADC conversion. This assurance remains valid only until another register is read.

Copyright © 2026 Texas Instruments Incorporated

For proper operation, read the high byte of the temperature result first. Read the low byte register in the next read command; if the LSBs are not needed, the register can be left unread. The power-on reset value of all temperature registers is 00h.

8.1.3 Status Register

The status register reports the state of the temperature ADC, the temperature limit comparators, and the connection to the remote sensor. Table 8-2 lists the status register bits. The status register is read-only and is read by accessing pointer address 02h.

Table 8-2. Status Register Format

STATUS REGISTER (Read = 02h, Write = N/A)		
BIT NUMBER	**BIT NAME**	**FUNCTION**
7	BUSY	= 1 when the ADC is converting
6	LHIGH(1)	= 1 when the local high temperature limit is tripped
5	LLOW(1)	= 1 when the local low temperature limit is tripped
4	RHIGH(1)	= 1 when the remote high temperature limit is tripped
3	RLOW(1)	= 1 when the remote low temperature limit is tripped
2	OPEN(1)	= 1 when the remote sensor is an open circuit
1	RTHRM	= 1 when the remote $\overline{\text{THERM}}$ limit is tripped
0	LTHRM	= 1 when the local $\overline{\text{THERM}}$ limit is tripped

(1) These flags stay high until the status register is read or are reset by a POR when pin 10 is configured as $\overline{\text{ALERT}}$. Only bit 2 (OPEN) stays high until the status register is read or is reset by a POR when pin 10 is configured as $\overline{\text{THERM2}}$.

The BUSY bit = 1 if the ADC is making a conversion. This bit is set to 0 if the ADC is not converting.

The LHIGH and LLOW bits indicate a local sensor overtemperature or undertemperature event, respectively. The RHIGH and RLOW bits indicate a remote sensor overtemperature or undertemperature event, respectively. The HIGH bit is set when the temperature exceeds the high limit in alert mode and therm mode, and the low bit is set when the temperature goes below the low limit in alert mode. The OPEN bit indicates an open-circuit condition on the remote sensor. When pin 10 is configured as the $\overline{\text{ALERT}}$ output, the five flags are NORed together. If any of the five flags are high, the $\overline{\text{ALERT}}$ interrupt latch is set and the $\overline{\text{ALERT}}$ output goes low. Reading the status register clears the five flags, provided that the condition that caused the setting of the flags is not present anymore (that is, the value of the corresponding result register is within the limits, or the remote sensor is connected properly and functional). The $\overline{\text{ALERT}}$ interrupt latch (and the $\overline{\text{ALERT}}$ pin correspondingly) is not reset by reading the status register. The reset is done by the controller reading the temperature sensor device address to service the interrupt, and only if the flags are reset and the condition that caused them to be set is no longer present.

The RTHRM and LTHRM flags are set when the corresponding temperature exceeds the programmed $\overline{\text{THERM}}$ limit. These flags are reset automatically when the temperature returns to within the limits. The $\overline{\text{THERM}}$ output goes low in the case of overtemperature on either the local or remote channel, and goes high as soon as the measurements are within the limits again. The $\overline{\text{THERM}}$ hysteresis register (21h) allows hysteresis to be added so that the flag resets and the output goes high when the temperature returns to or goes below the limit value minus the hysteresis value.

When pin 10 is configured as $\overline{\text{THERM2}}$, only the high limits matter. The LHIGH and RHIGH flags are set if the respective temperatures exceed the limit values, and the pin goes low to indicate the event. The LLOW and RLOW flags have no effect on $\overline{\text{THERM2}}$, and the output behaves the same way when configured as $\overline{\text{THERM}}$.

8.1.4 Configuration Register

The configuration register sets the temperature range, the $\overline{\text{ALERT}}$/ $\overline{\text{THERM}}$ modes, and controls the shutdown mode. The configuration register is set by writing to pointer address 09h, and is read by reading from pointer address 03h. Table 8-3 summarizes the bits of the configuration register.

Table 8-3. Configuration Register Bit Descriptions

CONFIGURATION REGISTER (Read = 03h, Write = 09h, POR = 00h)			
BIT NUMBER	**NAME**	**FUNCTION**	**POWER-ON RESET VALUE**
7	MASK1	0 = $\overline{\text{ALERT}}$ enabled 1 = $\overline{\text{ALERT}}$ masked	0
6	SD	0 = Run 1 = Shut down	0
5	$\overline{\text{ALERT}}$/ $\overline{\text{THERM2}}$	0 = $\overline{\text{ALERT}}$ 1 = $\overline{\text{THERM2}}$	0
4:3	Reserved	—	0
2	RANGE	0 = –40°C to +127°C 1 = –64°C to +191°C	0
1:0	Reserved	—	0

MASK1 (bit 7) of the configuration register masks the $\overline{\text{ALERT}}$ output. If MASK1 is 0 (default), the $\overline{\text{ALERT}}$ output is enabled. If MASK1 is set to 1, the $\overline{\text{ALERT}}$ output is disabled. This configuration applies only if the value of $\overline{\text{ALERT}}$/ $\overline{\text{THERM2}}$ (bit 5) is 0 (that is, pin 10 is configured as the $\overline{\text{ALERT}}$ output). If pin 10 is configured as the $\overline{\text{THERM2}}$ output, the value of the MASK1 bit has no effect.

The shutdown bit (SD, bit 6) enables or disables the temperature-measurement circuitry. If SD = 0 (default), the TMP9R01-SEP and TMP9R01-SP devices convert continuously at the rate set in the conversion rate register. When SD is set to 1, the device stops converting when the current conversion sequence is complete and enters a shutdown mode. When SD is set to 0 again, the device resumes continuous conversions. When SD = 1, a single conversion can be started by writing to the one-shot start register; see the *One-Shot Start Register* section for more information.

$\overline{\text{ALERT}}$/ $\overline{\text{THERM2}}$ (bit 5) sets the configuration of pin 10. If the $\overline{\text{ALERT}}$/ $\overline{\text{THERM2}}$ bit is 0 (default), then pin 10 is configured as the $\overline{\text{ALERT}}$ output; if this bit is set to 1, then pin 10 is configured as the $\overline{\text{THERM2}}$ output.

The temperature range is set by configuring RANGE (bit 2) of the configuration register. Setting this bit low (default) configures the TMP9R01-SEP and TMP9R01-SP devices for the standard measurement range (–40°C to +127°C); temperature conversions are stored in the standard binary format. Setting bit 2 high configures the device for the extended measurement range (–64°C to +191°C); temperature conversions are stored in the extended binary format (see Table 7-1). The remaining bits of the configuration register are reserved and must always be set to 0. The power-on reset value for this register is 00h.

8.1.5 Conversion Rate Register

The conversion rate register (read address 04h, write address 0Ah) controls the rate at which temperature conversions are performed. This register adjusts the idle time between conversions but not the conversion time, thereby allowing the device power dissipation to be balanced with the temperature register update rate. Table 8-4 lists the conversion rate options and corresponding time between conversions. The default value of the register is 08h, which gives a default rate of 16 conversions per second.

Table 8-4. Conversion Rate

VALUE	CONVERSIONS PER SECOND	TIME (Seconds)
00h	0.0625	16
01h	0.125	8
02h	0.25	4
03h	0.5	2
04h	1	1
05h	2	0.5
06h	4	0.25
07h	8	0.125
08h	16 (default)	0.0625 (default)

Copyright © 2026 Texas Instruments Incorporated

Table 8-4. Conversion Rate (continued)

VALUE	CONVERSIONS PER SECOND	TIME (Seconds)
09h	32	0.03125

8.1.6 One-Shot Start Register

When the TMP9R01-SEP and TMP9R01-SP devices are in shutdown mode (SD = 1 in the configuration register), a single conversion is started by writing any value to the one-shot start register, pointer address 0Fh. This write operation starts one conversion and comparison cycle on either both the local and remote sensors or on only one or the other sensor, depending on the LEN and REN values configured in the channel enable register (read address 16h, write address 16h). The device returns to shutdown mode when the cycle completes. The value of the data sent in the write command is irrelevant and is not stored by the device.

8.1.7 Channel Enable Register

The channel enable register (read address 16h, write address 16h) enables or disables the temperature conversion of remote and local temperature sensors. LEN (bit 0) of the channel enable register enables/disables the conversion of local temperature. REN (bit 1) of the channel enable register enables/disables the conversion of remote temperature. Both LEN and REN are set to 1 (default), which enables the ADC to convert both local and remote temperatures. If LEN is set to 0, the local temperature conversion is disabled, and similarly, if REN is set to 0, the remote temperature conversion is disabled.

Both local and remote temperatures are converted by the internal ADC as a default mode. The Channel Enable register can be configured to achieve power savings by reducing the total ADC conversion time to half for applications that do not require both remote and local temperature information.

8.1.8 Consecutive $\overline{\text{ALERT}}$ Register

The Consecutive $\overline{\text{ALERT}}$ register (read address 22h, write address 22h) controls the number of out-of-limit temperature measurements required for $\overline{\text{ALERT}}$ to be asserted. Table 8-5 summarizes the values of the consecutive $\overline{\text{ALERT}}$ register. The number programmed in the consecutive $\overline{\text{ALERT}}$ applies to both the remote and local temperature results. When the number of times that the temperature result consecutively exceeds the high limit register value is equal to the value programmed in the consecutive $\overline{\text{ALERT}}$ register, $\overline{\text{ALERT}}$ is asserted. Similarly, the consecutive $\overline{\text{ALERT}}$ register setting is also applicable to the low-limit register.

Table 8-5. Consecutive $\overline{\text{ALERT}}$

REGISTER VALUE	NUMBER OF OUT-OF-LIMIT MEASUREMENTS REQUIRED TO ASSERT $\overline{\text{ALERT}}$
01h	1 (default)
03h	2
07h	3
0Fh	4

8.1.9 η-Factor Correction Register

The TMP9R01-SEP and TMP9R01-SP devices allows for a different η-factor value to be used for converting remote channel measurements to temperature. The remote channel uses sequential current excitation to extract a differential V_{BE} voltage measurement to determine the temperature of the remote transistor. Equation 1 shows this voltage and temperature.

$$V_{BE2} - V_{BE1} = \frac{\eta kT}{q} \ln\left(\frac{I_2}{I_1}\right) \tag{1}$$

The value η in Equation 1 is a characteristic of the particular transistor used for the remote channel. The power-on reset value for the TMP9R01-SEP and TMP9R01-SP devices is η = 1.008. The value in the η-factor correction register can be used to adjust the effective η-factor according to Equation 2 and Equation 3.

$$\eta_{eff} = \left(\frac{1.008 \times 2088}{2088 + N_{ADJUST}}\right) \tag{2}$$

$$N_{\text{ADJUST}} = \left(\frac{1.008 \times 2088}{\eta_{\text{eff}}}\right) - 2088 \quad (3)$$

The η-factor correction value must be stored in 2's complement format, yielding an effective data range from –128 to 127. The η-factor correction value is written to and read from pointer address 23h. The register power-on reset value is 00h, thus having no effect unless a different value is written to the register. The resolution of the η-factor register is 0.000483.

Table 8-6. η-Factor Range

N_{ADJUST}			η
BINARY	HEX	DECIMAL	
0111 1111	7F	127	0.950205
0000 1010	0A	10	1.003195
0000 1000	08	8	1.004153
0000 0110	06	6	1.005112
0000 0100	04	4	1.006073
0000 0010	02	2	1.007035
0000 0001	01	1	1.007517
0000 0000	00	0	1.008
1111 1111	FF	–1	1.008483
1111 1110	FE	–2	1.008966
1111 1100	FC	–4	1.009935
1111 1010	FA	–6	1.010905
1111 1000	F8	–8	1.011877
1111 0110	F6	–10	1.012851
1000 0000	80	–128	1.073829

8.1.10 Remote Temperature Offset Register

The offset register allows the TMP9R01-SEP and TMP9R01-SP devices to store any system offset compensation value that can result from precision calibration. The value in the register is stored in the same format as the temperature result and is added to the remote temperature result upon every conversion. Combined with the η-factor correction, this function allows for very accurate system calibration over the entire temperature range.

8.1.11 Manufacturer Identification Register

The TMP9R01-SEP and TMP9R01-SP devices allow for the two-wire bus controller to query the device for manufacturer and device IDs to enable software identification of the device at the particular two-wire bus address. The manufacturer ID is obtained by reading from the pointer address FEh. The device reads 55h for the manufacturer code.

Copyright © 2026 Texas Instruments Incorporated

9 Application and Implementation

Note

Information in the following applications sections is not part of the TI component specification, and TI does not warrant its accuracy or completeness. TI's customers are responsible for determining suitability of components for their purposes, as well as validating and testing their design implementation to confirm system functionality.

9.1 Application Information

The TMP9R01-SEP and TMP9R01-SP devices requires only a transistor connected between the D+ and D– pins for remote temperature measurement. Tie the D+ pin to D– or GND if the remote channel is not used and only the local temperature is measured. The SDA, $\overline{\text{ALERT}}$, and $\overline{\text{THERM}}$ pins (and SCL, if driven by an open-drain output) require pullup resistors as part of the communication bus. A 0.1µF power-supply decoupling capacitor is recommended for local bypassing. TMP9R01-SEP and TMP9R01-SP Basic Connections Using a Processor Built-In Remote Transistor shows the typical configurations for the device.

For additional information, refer to the application note: How to Optimize Space-Grade Temperature Sensing Designs.

9.2 Typical Application

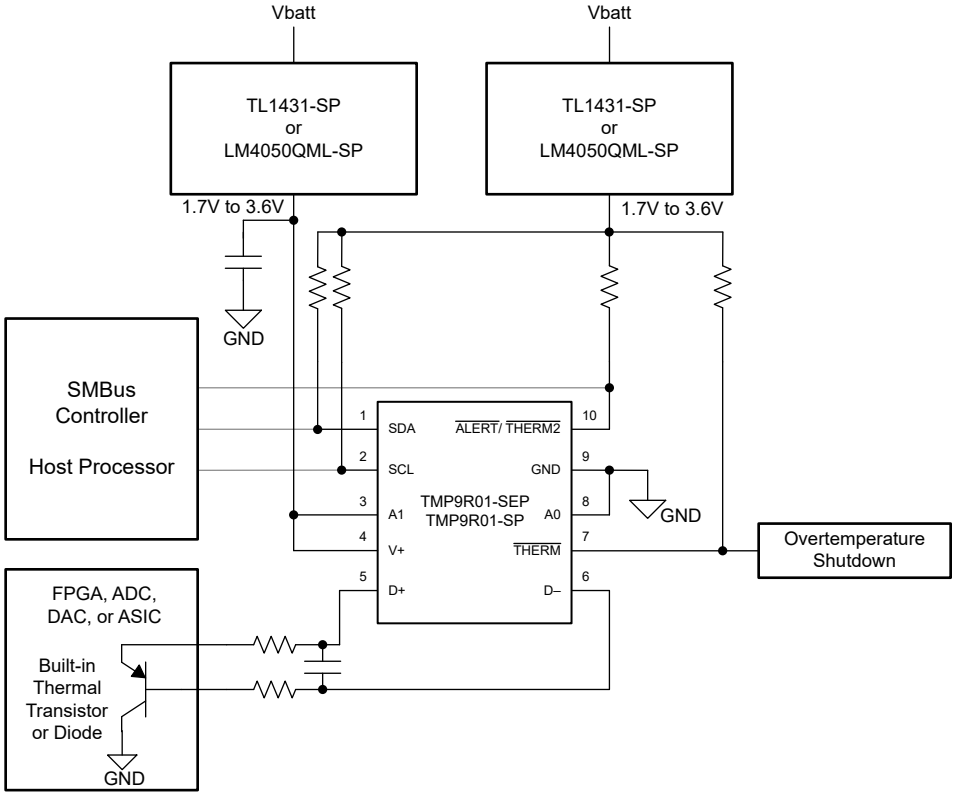

Figure 9-1. TMP9R01-SEP and TMP9R01-SP Basic Connections Using a Processor Built-In Remote Transistor

9.2.1 Design Requirements

The TMP9R01-SEP and TMP9R01-SP devices are designed to be used with either discrete transistors or substrate transistors built into processor chips and application-specific integrated circuits (ASICs). Either NPN or PNP transistors can be used, as long as the base-emitter junction is used as the remote temperature sense.

NPN transistors must be diode-connected. PNP transistors can either be transistor- or diode-connected (see Figure 7-1). The D+ pin waveform is shown in Figure 9-2 while a transistor is connected between the D+ and D– pins. Due to three different source currents shown in Section 7.2, the D+ waveform has 3 levels of voltages during temperature conversion.

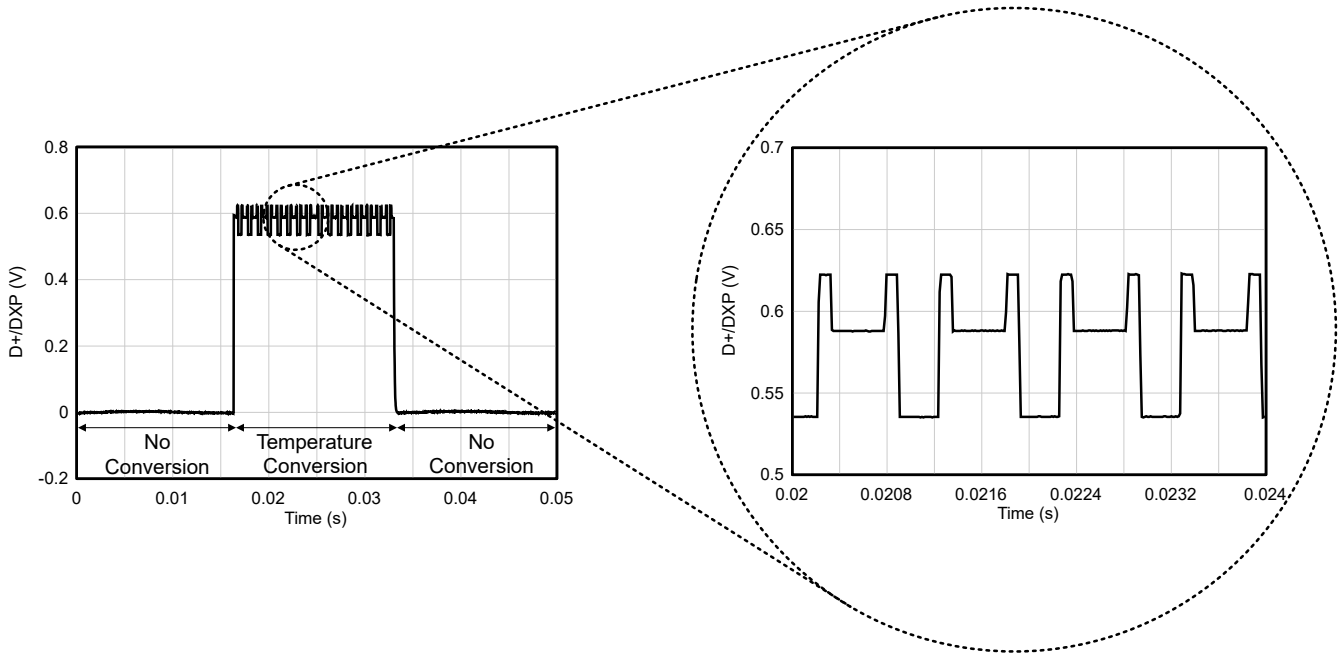

Figure 9-2. D+ Waveform

Errors in remote temperature sensor readings are typically the consequence of the ideality factor and current excitation used by the device versus the manufacturer-specified operating current for a given transistor. Some manufacturers specify a high-level and low-level current for the temperature-sensing substrate transistors. The device uses 7.5µA for I_{LOW} and 120µA for I_{HIGH}.

The ideality factor (η) is a measured characteristic of a remote temperature sensor diode as compared to an ideal diode. The TMP9R01-SEP and TMP9R01-SP devices allow for different η-factor values; see the *η-Factor Correction Register* section.

The ideality factor for the TMP9R01-SEP and TMP9R01-SP devices is trimmed to be 1.008. For transistors that have an ideality factor that does not match the device, Equation 4 can be used to calculate the temperature error.

Note

For Equation 4 to be used correctly, the actual temperature (°C) must be converted to Kelvin (K).

$$T_{\mathrm{ERR}} = \left(\frac{\eta - 1.008}{1.008}\right) \times (273.15 + T(^{\circ}\mathrm{C})) \tag{4}$$

where

- T_{ERR} = error in the TMP9R01-SEP and TMP9R01-SP devices because η ≠ 1.008,
- η = ideality factor of the remote temperature sensor,
- T(°C) = actual temperature, and

In Equation 4, the degree of delta is the same for °C and K.

For η = 1.004 and T(°C) = 100°C:

Copyright © 2026 Texas Instruments Incorporated

$$T_{ERR} = \left(\frac{1.004 - 1.008}{1.008}\right) \times (273.15 + 100^{\circ}C) T_{ERR} = -1.48^{\circ}C \quad (5)$$

If a discrete transistor is used as the remote temperature sensor with the TMP9R01-SEP and TMP9R01-SP devices, the best accuracy can be achieved by selecting the transistor according to the following criteria:

1. Base-emitter voltage is > 0.25V at 7.5µA, at the highest-sensed temperature.
2. Base-emitter voltage is < 0.95V at 120µA, at the lowest-sensed temperature.
3. Base resistance is < 100Ω.
4. Tight control of V_{BE} characteristics indicated by small variations in h_{FE} (that is, 50 to 150).

Based on this criteria, two recommended small-signal transistors are the 2N3904 (NPN) or 2N3906 (PNP).

9.2.2 Detailed Design Procedure

The local temperature sensor inside the TMP9R01-SEP and TMP9R01-SP devices monitor the ambient air around the device. The thermal time constant for the device is approximately 1.1 seconds. This constant implies that if the ambient air changes quickly by 100°C, then the device takes approximately 5.5 seconds (that is, five thermal time constants) to settle to within 1°C of the final value. In most applications, the TMP9R01-SEP and TMP9R01-SP package is in electrical, and therefore thermal, contact with the printed circuit board (PCB), as well as subjected to forced airflow. The accuracy of the measured temperature directly depends on how accurately the PCB and forced airflow temperatures represent the temperature that the device is measuring. Additionally, the internal power dissipation of the device can cause the temperature to rise above the ambient or PCB temperature. The internal power dissipated as a result of exciting the remote temperature sensor is negligible because of the small currents used. Equation 6 can be used to calculate the average conversion current for power dissipation and self-heating based on the number of conversions per second and the temperature sensor channel enabled. Typical Application shows an example with local and remote sensor channels enabled and 16 conversions per second; see the *Section 6.5* table for typical values required for these calculations. For a 3.3V supply and a conversion rate of 16 conversions per second, the TMP9R01-SEP and TMP9R01-SP devices dissipates 0.531mW (PD_{IQ} = 3.3V × 161µA) when both the remote and local channels are enabled.

$$\begin{aligned}\text{Average Conversion Current} &= (\text{Local ADC Conversion Time}) \times (\text{Conversions per Second}) \times (\text{Local Active } I_Q) \\ &+ (\text{Remote ADC Conversion Time}) \times (\text{Conversions per Second}) \times (\text{Remote Active } I_Q) \\ &+ (\text{Standby Mode } I_Q) \times [1 - (\text{Local ADC Conversion Time} + \text{Remote ADC Conversion Time}) \times (\text{Conversions per Second})]\end{aligned} \quad (6)$$

$$\text{Average Conversion Current} = (15\text{ms})\left(\frac{16}{s}\right) \times (240\ \mu A) \quad (7)$$

$$+ (15\text{ms}) \times \left(\frac{16}{s}\right)(400\ \mu A) \quad (8)$$

$$+ (15\ \mu A) \times \left[1 - (15\text{ms} + 15\text{ms}) \times \left(\frac{16}{s}\right)\right] \quad (9)$$

$$= 161\ \mu A \quad (10)$$

The temperature measurement accuracy of the device depends on the remote and local temperature sensor being at the same temperature as the system point being monitored. If the temperature sensor is not in good thermal contact with the part of the system being monitored, then there is a delay between the sensor response and the system changing temperature. This delay is typically not a concern for remote temperature-sensing applications that use a substrate transistor (or a small, SOT23 transistor) placed close to the device being monitored.

9.2.3 Application Curve

Figure 9-3 shows the step response of the TMP9R01-SEP and TMP9R01-SP devices to a submersion in an oil bath of 100°C from room temperature (25°C). The time-constant, or the time for the output to reach 63% of the input step, is around 1.1s for local sensors and 0.6s for the remote diode sensor. The time-constant result

depends on the printed-circuit board (PCB) size that the device is mounted. For this test, the device is soldered to a two-layer PCB that measures 0.5 inches × 0.5 inches.

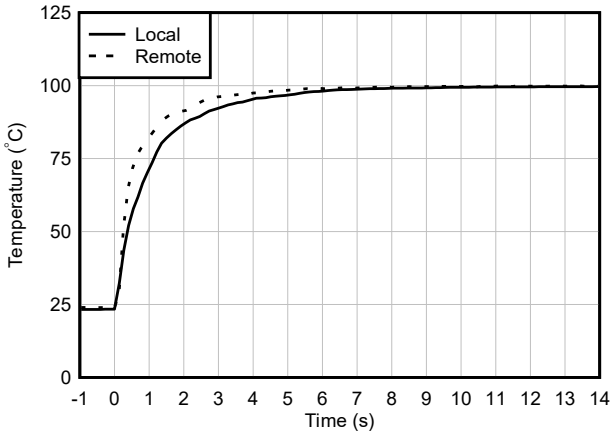

Local: soldered devices on 62mil 2-layer FR4 PCB
Remote: characterized with 2N3906 PNP transistor

Figure 9-3. Temperature Step Response

9.3 Radiation Environments

Careful consideration must be given to environmental conditions when using a product in a radiation environment.

Note

During the exposure time, all I^2C registers can be continuously read. However, resetting the TMP9R01-SEP and TMP9R01-SP devices before every read is recommended. Without resetting the device, there is a chance the device performs not as accurate as expected.

9.3.1 Single Event Latch-Up

One-time single event latch-up (SEL) testing is preformed according to EIA/JEDEC Standard, EIA/JEDEC57. The linear energy transfer threshold (LETth) shown in *Features* is the maximum LET tested. A test report is available in the TMP9R01-SEP Single-Event Effects (SEE) Radiation Test Report and TMP9R01-SP Single-Event Effects (SEE) Radiation Test Report.

9.3.2 Single Event Functional Interrupt

To mitigate the effects of single-event upsets and single-event functional interrupts, write the appropriate value to the pointer register each time a read operation is performed. Relying on the last value stored in the pointer register can increase the probability of a failed read due to a single event upset.

If other functions are being used, such as the temperature limit register, occasionally rewriting to these registers can be necessary. TMP9R01EVM is designed with SEE in mind. You can use the TMP9R01EVM for additional SEL testing. An example driver can help aid you in designing the communicating software.

9.3.3 Single Event Upset

A report on single event upset (SEU) is available in the TMP9R01-SEP Single-Event Effects (SEE) Radiation Test Report and TMP9R01-SP Single-Event Effects (SEE) Radiation Test Report.

9.4 Power Supply Recommendations

The TMP9R01-SEP and TMP9R01-SP devices operate with a power-supply range of 1.7V to 3.6V. The device is optimized for operation at a 3.3V supply but can measure temperature accurately in the full supply range.

Copyright © 2026 Texas Instruments Incorporated

A power-supply bypass capacitor is recommended. Place this capacitor as close as possible to the supply and ground pins of the device. A typical value for this supply bypass capacitor is 0.1µF. Applications with noisy or high-impedance power supplies can require additional decoupling capacitors to reject power-supply noise.

9.5 Layout

9.5.1 Layout Guidelines

Remote temperature sensing on the TMP9R01-SEP and TMP9R01-SP devices measure very small voltages using very low currents; therefore, noise at the device inputs must be minimized. Most applications using the device have high digital content, with several clocks and logic-level transitions that create a noisy environment. Layout must adhere to the following guidelines:

1. Place the TMP9R01-SEP and TMP9R01-SP devices as close to the remote junction sensor as possible.
2. Route the D+ and D– traces next to each other and shield them from adjacent signals through the use of ground guard traces, as shown in Figure 9-4. If a multilayer PCB is used, bury these traces between the ground or V+ planes to shield them from extrinsic noise sources. 5mil (0.127mm) PCB traces are recommended.
3. Minimize additional thermocouple junctions caused by copper-to-solder connections. If these junctions are used, make the same number and approximate locations of copper-to-solder connections in both the D+ and D– connections to cancel any thermocouple effects.
4. Use a 0.1µF local bypass capacitor directly between the V+ and GND of the device. For optimum measurement performance, minimize filter capacitance between D+ and D– to 1000pF or less. This capacitance includes any cable capacitance between the remote temperature sensor and the device.
5. If the connection between the remote temperature sensor and the device is less than 8in (20.32cm) long, use a twisted-wire pair connection. For lengths greater than 8 in, use a twisted, shielded pair with the shield grounded as close to the device as possible. Leave the remote sensor connection end of the shield wire open to avoid ground loops and 60Hz pickup.
6. Thoroughly clean and remove all flux residue in and around the pins of the TMP9R01-SEP and TMP9R01-SP devices to avoid temperature offset readings as a result of leakage paths between D+ and GND, or between D+ and V+.

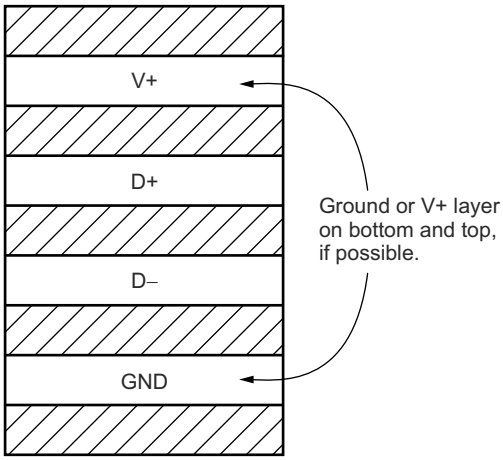

NOTE: Use a minimum of 5mil (0.127mm) traces with 5mil spacing.

Figure 9-4. Suggested PCB Layer Cross-Section

9.5.2 Layout Example

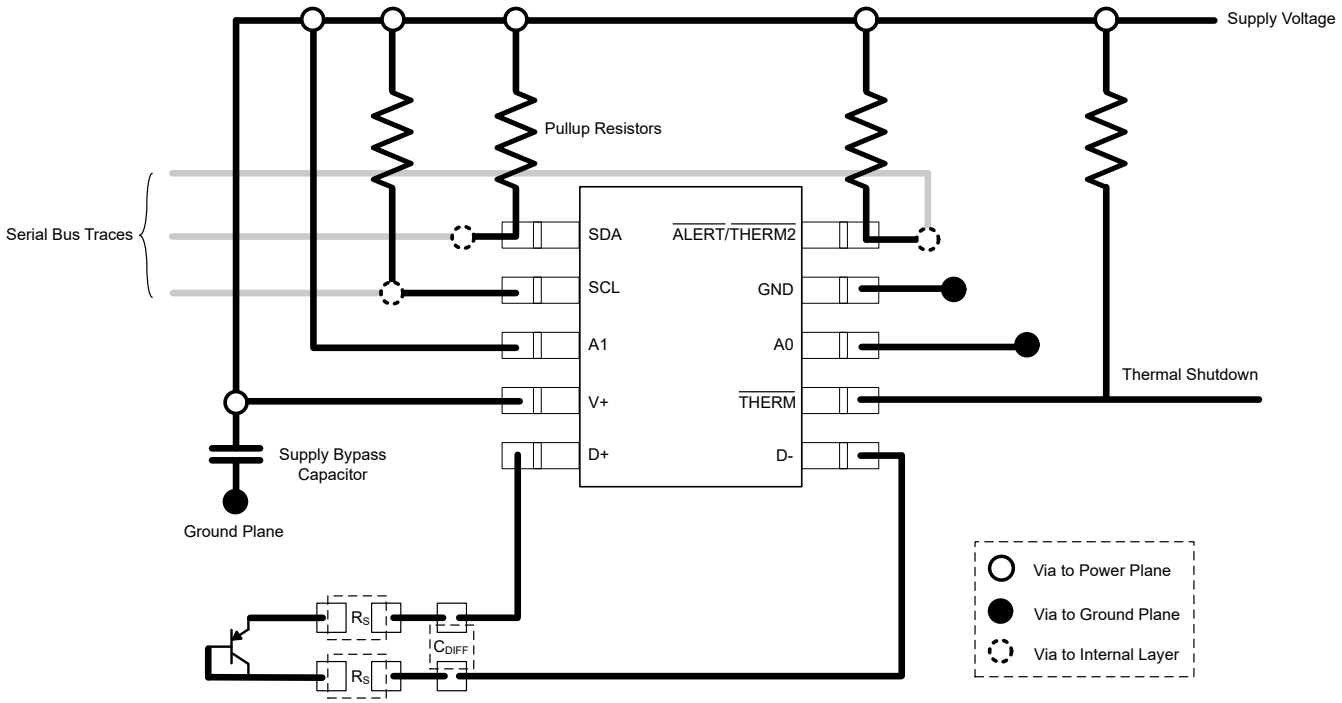

Figure 9-5. TMP9R01-SEP and TMP9R01-SP Layout Example

Copyright © 2026 Texas Instruments Incorporated

10 Device and Documentation Support

10.1 Receiving Notification of Documentation Updates

To receive notification of documentation updates, navigate to the device product folder on ti.com. Click on *Notifications* to register and receive a weekly digest of any product information that has changed. For change details, review the revision history included in any revised document.

10.2 Related Documentation

For related documentation see the following:

- Texas Instruments, *TMP461-SP Radiation-Hardness-Assured (RHA), High-Accuracy Remote and Local Temperature Sensor*, datasheet
- Texas Instruments, *TMP9R01-SP Single-Event Effects (SEE) Radiation Test Report*, radiation report
- Texas Instruments, *TMP9R01-SEP Single-Event Effects (SEE) Radiation Test Report*, radiation report
- Texas Instruments, *TMP9R01-SEP Total Ionizing Dose (TID) Report*, radiation report
- Texas Instruments, *TMP9R01 Evaluation Module*, EVM User's Guide
- Texas Instruments, *Remote Temperature Sensor Transistor Selection Guide*, application note
- Texas Instruments, *How to Optimize Space-Grade Temperature Sensing Designs*, application note
- Texas Instruments, *TI Space Qualified Temperature Sensor Product Selection Guide*

10.3 Support Resources

TI E2E™ support forums are an engineer's go-to source for fast, verified answers and design help — straight from the experts. Search existing answers or ask your own question to get the quick design help you need.

Linked content is provided "AS IS" by the respective contributors. They do not constitute TI specifications and do not necessarily reflect TI's views; see TI's Terms of Use.

10.4 Trademarks

TI E2E™ is a trademark of Texas Instruments.
All trademarks are the property of their respective owners.

10.5 Electrostatic Discharge Caution

This integrated circuit can be damaged by ESD. Texas Instruments recommends that all integrated circuits be handled with appropriate precautions. Failure to observe proper handling and installation procedures can cause damage.

ESD damage can range from subtle performance degradation to complete device failure. Precision integrated circuits may be more susceptible to damage because very small parametric changes could cause the device not to meet its published specifications.

10.6 Glossary

TI Glossary — This glossary lists and explains terms, acronyms, and definitions.

11 Revision History

NOTE: Page numbers for previous revisions may differ from page numbers in the current version.

Changes from July 8, 2026 to October 15, 2026 (from Revision A (May 2026) to Revision B (October 2026)) — **Page**

- Added links to the *Features* section 1
- Added link to ASC Studio in the *Applications* section 1
- Updated the *Package Information* table in the *Description* section 1
- Deleted the *5962R1721802PYE Order Number Nomenclature* table in the *Device Information* section 3
- Updated the Rise time for SCL ≤ 100kHz from 1000ms to 1000ns 8

Changes from July 25, 2025 to July 8, 2026 (from Revision * (July 2025) to Revision A (May 2026)) **Page**

- Updated the document to included the released TMP9R01-SP device..... 1

12 Mechanical, Packaging, and Orderable Information

The following pages include mechanical, packaging, and orderable information. This information is the most current data available for the designated devices. This data is subject to change without notice and revision of this document. For browser-based versions of this datasheet, refer to the left-hand navigation.

Copyright © 2026 Texas Instruments Incorporated

PACKAGING INFORMATION

Orderable part number	Status (1)	Material type (2)	Package | Pins	Package qty | Carrier	RoHS (3)	Lead finish/ Ball material (4)	MSL rating/ Peak reflow (5)	Op temp (°C)	Part marking (6)
5962R1721802PYE	Active	Production	VSSOP (DGS) | 10	250 | LARGE T&R	Yes	NIPDAU	Level-2-260C-1 YEAR	-55 to 125	Q802
TMP9R01DGS/EM	Active	Production	VSSOP (DGS) | 10	3000 | LARGE T&R	Yes	NIPDAU	Level-2-260C-1 YEAR	-55 to 125	9REM
TMP9R01MDGSTSEP	Active	Production	VSSOP (DGS) | 10	250 | SMALL T&R	Yes	NIPDAU	Level-2-260C-1 YEAR	-55 to 125	9R01
V62/24615-01XE	Active	Production	VSSOP (DGS) | 10	250 | SMALL T&R	Yes	NIPDAU	Level-2-260C-1 YEAR	-55 to 125	9R01

(1) **Status:** For more details on status, see our product life cycle.

(2) **Material type:** When designated, preproduction parts are prototypes/experimental devices, and are not yet approved or released for full production. Testing and final process, including without limitation quality assurance, reliability performance testing, and/or process qualification, may not yet be complete, and this item is subject to further changes or possible discontinuation. If available for ordering, purchases will be subject to an additional waiver at checkout, and are intended for early internal evaluation purposes only. These items are sold without warranties of any kind.

(3) **RoHS values:** Yes, No, RoHS Exempt. See the TI RoHS Statement for additional information and value definition.

(4) **Lead finish/Ball material:** Parts may have multiple material finish options. Finish options are separated by a vertical ruled line. Lead finish/Ball material values may wrap to two lines if the finish value exceeds the maximum column width.

(5) **MSL rating/Peak reflow:** The moisture sensitivity level ratings and peak solder (reflow) temperatures. In the event that a part has multiple moisture sensitivity ratings, only the lowest level per JEDEC standards is shown. Refer to the shipping label for the actual reflow temperature that will be used to mount the part to the printed circuit board.

(6) **Part marking:** There may be an additional marking, which relates to the logo, the lot trace code information, or the environmental category of the part.

Multiple part markings will be inside parentheses. Only one part marking contained in parentheses and separated by a "~" will appear on a part. If a line is indented then it is a continuation of the previous line and the two combined represent the entire part marking for that device.

Important Information and Disclaimer: The information provided on this page represents TI's knowledge and belief as of the date that it is provided. TI bases its knowledge and belief on information provided by third parties, and makes no representation or warranty as to the accuracy of such information. Efforts are underway to better integrate information from third parties. TI has taken and continues to take reasonable steps to provide representative and accurate information but may not have conducted destructive testing or chemical analysis on incoming materials and chemicals. TI and TI suppliers consider certain information to be proprietary, and thus CAS numbers and other limited information may not be available for release.

In no event shall TI's liability arising out of such information exceed the total purchase price of the TI part(s) at issue in this document sold by TI to Customer on an annual basis.

OTHER QUALIFIED VERSIONS OF TMP9R01-SEP, TMP9R01-SP :

- Catalog : TMP9R01-SEP
- Space : TMP9R01-SP

NOTE: Qualified Version Definitions:

- Catalog - TI's standard catalog product
- Space - Radiation tolerant, ceramic packaging and qualified for use in Space-based application

TAPE AND REEL INFORMATION

REEL DIMENSIONS

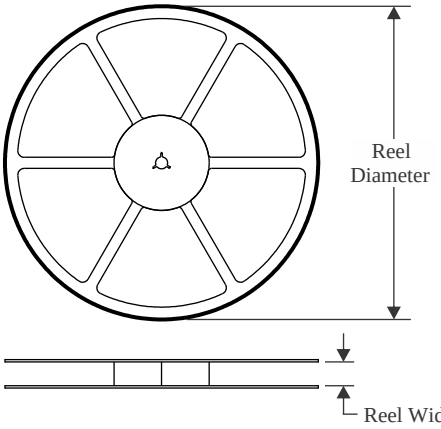

TAPE DIMENSIONS

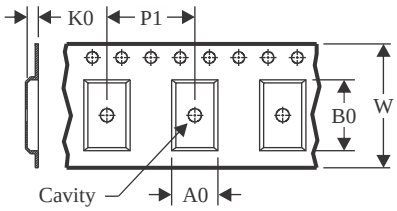

A0	Dimension designed to accommodate the component width
B0	Dimension designed to accommodate the component length
K0	Dimension designed to accommodate the component thickness
W	Overall width of the carrier tape
P1	Pitch between successive cavity centers

QUADRANT ASSIGNMENTS FOR PIN 1 ORIENTATION IN TAPE

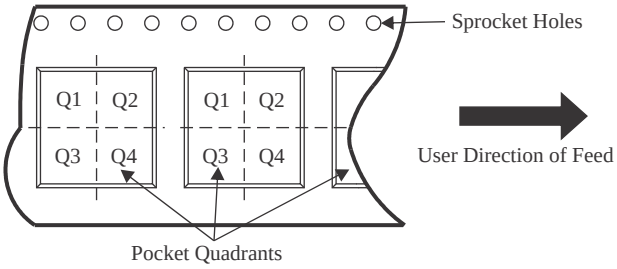

*All dimensions are nominal

Device	Package Type	Package Drawing	Pins	SPQ	Reel Diameter (mm)	Reel Width W1 (mm)	A0 (mm)	B0 (mm)	K0 (mm)	P1 (mm)	W (mm)	Pin1 Quadrant
5962R1721802PYE	VSSOP	DGS	10	250	178.0	12.4	5.3	3.4	1.4	8.0	12.0	Q1
TMP9R01DGS/EM	VSSOP	DGS	10	3000	178.0	12.4	5.3	3.4	1.4	8.0	12.0	Q1

TAPE AND REEL BOX DIMENSIONS

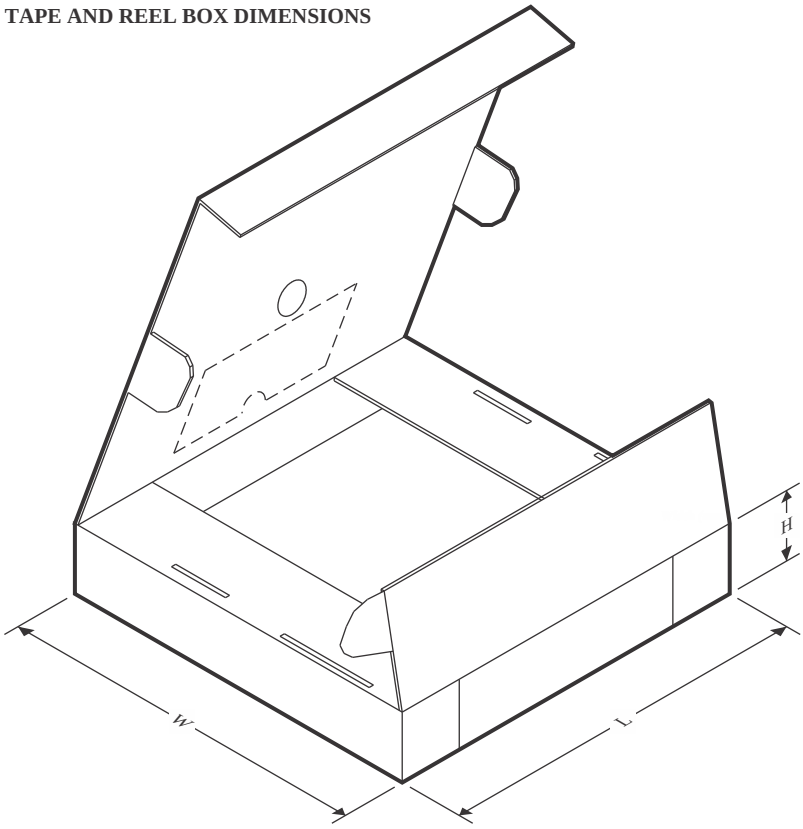

*All dimensions are nominal

Device	Package Type	Package Drawing	Pins	SPQ	Length (mm)	Width (mm)	Height (mm)
5962R1721802PYE	VSSOP	DGS	10	250	208.0	191.0	35.0
TMP9R01DGS/EM	VSSOP	DGS	10	3000	208.0	191.0	35.0

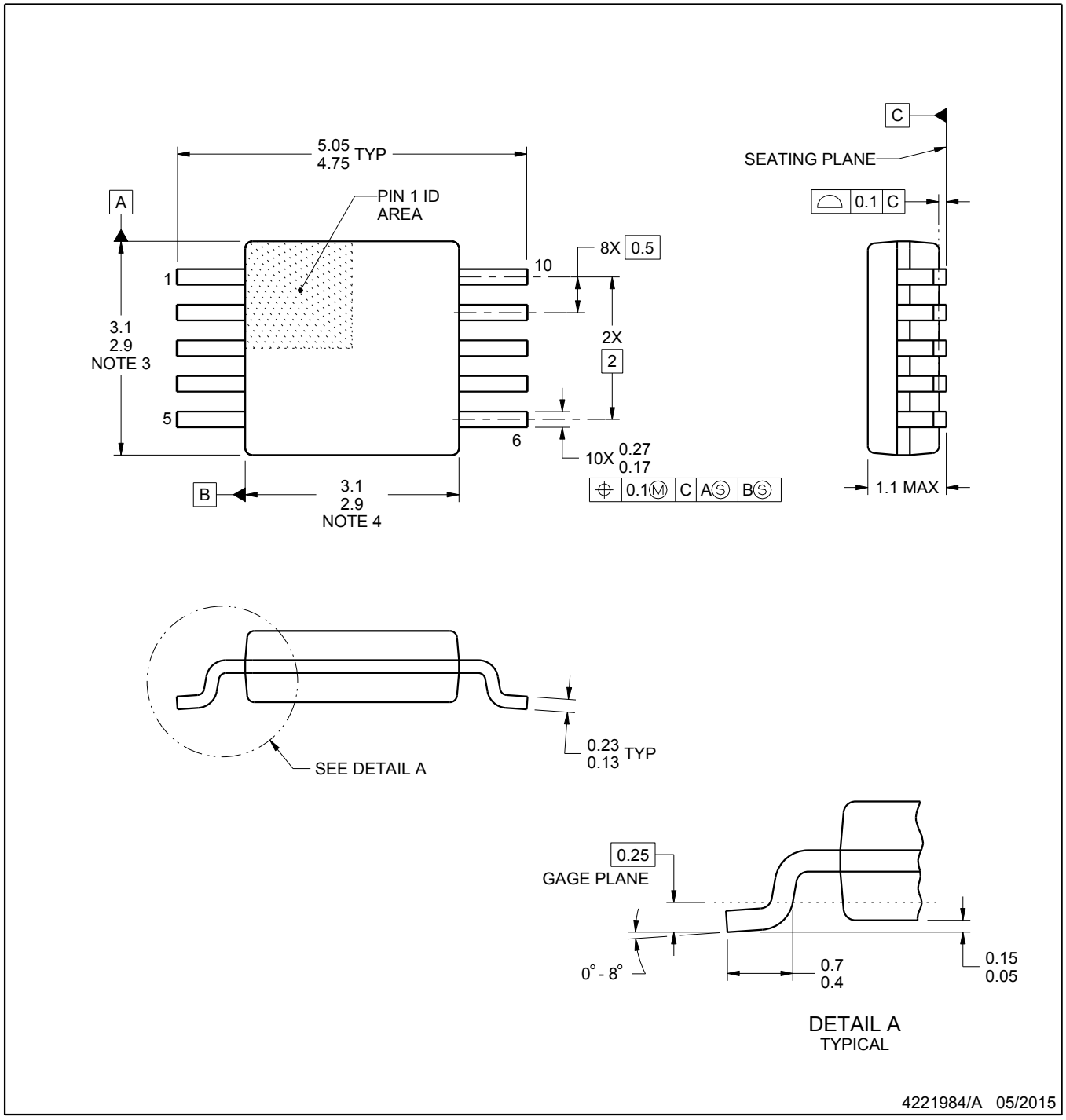

NOTES:

1. All linear dimensions are in millimeters. Any dimensions in parenthesis are for reference only. Dimensioning and tolerancing per ASME Y14.5M.
2. This drawing is subject to change without notice.
3. This dimension does not include mold flash, protrusions, or gate burrs. Mold flash, protrusions, or gate burrs shall not exceed 0.15 mm per side.
4. This dimension does not include interlead flash. Interlead flash shall not exceed 0.25 mm per side.
5. Reference JEDEC registration MO-187, variation BA.

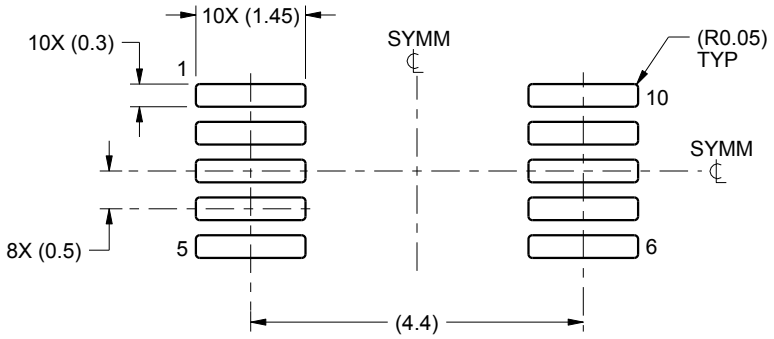

LAND PATTERN EXAMPLE
SCALE:10X

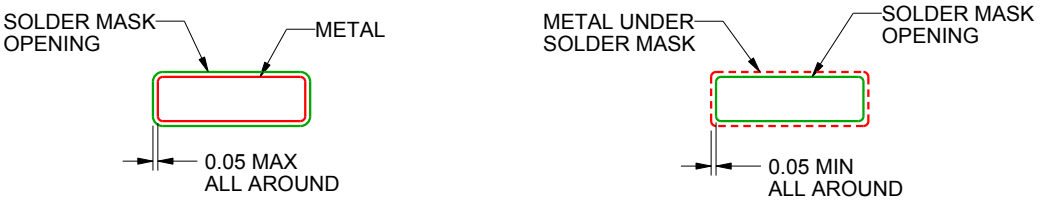

NON SOLDER MASK
DEFINED

SOLDER MASK
DEFINED

SOLDER MASK DETAILS
NOT TO SCALE

4221984/A 05/2015

NOTES: (continued)

6. Publication IPC-7351 may have alternate designs.
7. Solder mask tolerances between and around signal pads can vary based on board fabrication site.

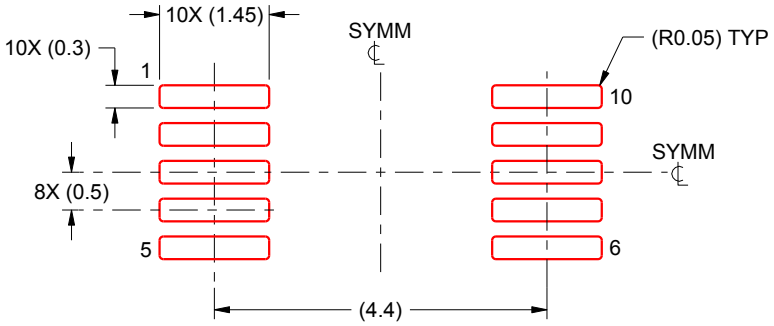

SOLDER PASTE EXAMPLE
BASED ON 0.125 mm THICK STENCIL
SCALE:10X

4221984/A 05/2015

NOTES: (continued)

8. Laser cutting apertures with trapezoidal walls and rounded corners may offer better paste release. IPC-7525 may have alternate design recommendations.
9. Board assembly site may have different recommendations for stencil design.

IMPORTANT NOTICE AND DISCLAIMER

TI PROVIDES TECHNICAL AND RELIABILITY DATA (INCLUDING DATASHEETS), DESIGN RESOURCES (INCLUDING REFERENCE DESIGNS), APPLICATION OR OTHER DESIGN ADVICE, WEB TOOLS, SAFETY INFORMATION, AND OTHER RESOURCES “AS IS” AND WITH ALL FAULTS, AND DISCLAIMS ALL WARRANTIES, EXPRESS AND IMPLIED, INCLUDING WITHOUT LIMITATION ANY IMPLIED WARRANTIES OF MERCHANTABILITY, FITNESS FOR A PARTICULAR PURPOSE OR NON-INFRINGEMENT OF THIRD PARTY INTELLECTUAL PROPERTY RIGHTS.

These resources are intended for skilled developers designing with TI products. You are solely responsible for (1) selecting the appropriate TI products for your application, (2) designing, validating and testing your application, and (3) ensuring your application meets applicable standards, and any other safety, security, regulatory or other requirements.

These resources are subject to change without notice. TI grants you permission to use these resources only for development of an application that uses the TI products described in the resource. Other reproduction and display of these resources is prohibited. No license is granted to any other TI intellectual property right or to any third party intellectual property right. TI disclaims responsibility for, and you fully indemnify TI and its representatives against any claims, damages, costs, losses, and liabilities arising out of your use of these resources.

TI’s products are provided subject to TI’s Terms of Sale, TI’s General Quality Guidelines, or other applicable terms available either on ti.com or provided in conjunction with such TI products. TI’s provision of these resources does not expand or otherwise alter TI’s applicable warranties or warranty disclaimers for TI products. Unless TI explicitly designates a product as custom or customer-specified, TI products are standard, catalog, general purpose devices.

TI objects to and rejects any additional or different terms you may propose.

Copyright © 2026, Texas Instruments Incorporated

Last updated 10/2025