TMAG5013 High-Voltage, Precision Hall-Effect Latch/Switch With Enhanced ESD Robustness

1 Features

- Digital Hall-effect latch/switch family
  - TMAG5013L: bipolar-latch
  - TMAG5013U: unipolar-switch
  - TMAG5013B: omnipolar-switch
- High ESD reliability
  - ±8kV HBM per ANSI/ ESDA/JEDEC, JS-001
  - ±2kV CDM per JEDEC JESD22C101
- Exceptional temperature stability
  - B_{OP} ±10% overtemperature
- Multiple sensitivity options (B_{OP} / B_{RP})
  - ±1.5mT (xAx, see *Section 4*)
  - ±3.0mT (xDx, see *Section 4*)
  - ±6mT (xJx, see *Section 4*)
- Output polarity options: active high, active low
- Supports a wide voltage range
  - 2.5V to 28V, no external regulator required
- Wide operating temperature range: T_A = –40 to 125°C
- Open-drain output (12mA sink)
- Small package and footprint
  - Surface mount 3-pin SOT-23 (DBZ)
    - 2.92mm × 2.37mm × 1.12mm (including leads)
- **Protection features:**
  - Output short-circuit protection
  - Output current limitation

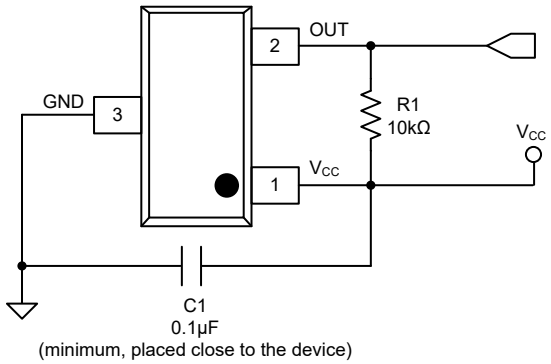

Typical Application Circuit

2 Applications

- Power tools
- Home appliances
- Valve and actuator control
- Brushless DC motors
- Vacuum robots
- Linear motors

3 Description

The TMAG5013 device is a chopper-stabilized Hall effect latch/switch that offers a magnetic sensing design with exceptional sensitivity stability over temperature and enhanced ESD robustness and integrated protection features.

The magnetic field is indicated through a digital output. The IC has an open-drain output stage with 12mA current sink capability. A wide operating voltage range from 2.5V to 28V makes the device designed for a wide range of industrial applications.

Multiple magnetic threshold and polarity options with high-accuracy characteristics enable design flexibility and reduce operational tolerances within the system.

Internal protection functions are provided for output short circuit or overcurrent conditions, along with enhanced ESD reliability (±8kV HBM) to maximize system robustness.

Package Information

PART NUMBER	PACKAGE(1)	PACKAGE SIZE(2)
TMAG5013	DBZ (SOT-23, 3)	2.92mm × 2.37mm

(1) For more information, see Mechanical, Packaging, and Orderable Information.
(2) The package size (length × width) is a nominal value and includes pins, where applicable.

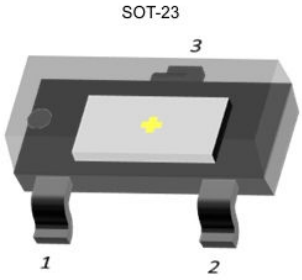

Device Packages

An IMPORTANT NOTICE at the end of this data sheet addresses availability, warranty, changes, use in safety-critical applications, intellectual property matters and other important disclaimers. UNLESS OTHERWISE NOTED, this document contains PRODUCTION DATA.

Table of Contents

1 Features....1
2 Applications....1
3 Description....1
4 Device Comparison....2
5 Pin Configuration and Functions....4
6 Specifications....5
6.1 Absolute Maximum Ratings....5
6.2 ESD Ratings....5
6.3 Recommended Operating Conditions....5
6.4 Thermal Information....5
6.5 Electrical Characteristics....6
6.6 Switching Characteristics....6
6.7 Magnetic Characteristics....6
6.8 Typical Characteristics....8
7 Detailed Description....10
7.1 Overview....10
7.2 Functional Block Diagram....10
7.3 Feature Description....11
7.4 Device Functional Modes....16
8 Application and Implementation....17
8.1 Application Information....17
8.2 Typical Applications....17
8.3 Power Supply Recommendations....19
8.4 Layout....20
9 Device and Documentation Support....21
9.1 Receiving Notification of Documentation Updates....21
9.2 Support Resources....21
9.3 Trademarks....21
9.4 Electrostatic Discharge Caution....21
9.5 Glossary....21
10 Revision History....21
11 Mechanical, Packaging, and Orderable Information....21

4 Device Comparison

Table 4-1. Device Comparison

VERSION	MAGNETIC RESPONSE TYPE	TYPICAL B_{OP}	TYPICAL B_{RP}	OUTPUT TYPE
LA0	Latch	1.5mT	-1.5mT	Active Low
LA1	Latch	1.5mT	-1.5mT	Active High (Inverted Output)
LD0	Latch	3.0mT	-3.0mT	Active Low
LD1	Latch	3.0mT	-3.0mT	Active High (Inverted Output)
LJ0	Latch	6.0mT	-6.0mT	Active Low

Table 4-2 indicates the magnetic response, B_{OP}, and output type options available. For new version samples please contact your local representative. For example, TMAG5013LD0 is a latch, 3.0mT B_{OP}, Active Low version of the device.

Copyright © 2026 Texas Instruments Incorporated

Table 4-2. Additional Device Configuration Options

Magnetic Response Type	Typical B_{OP}	Output Type
L = Latch	A = 1.5mT	0 = Active Low, Open Drain
U = Unipolar Switch	B = 2.0mT	1 = Active High, Open Drain
B = Omnipolar Switch	C = 2.5mT	
	D = 3.0mT	
	E = 3.5mT	
	F = 4.0mT	
	G = 4.5mT	
	H = 5.0mT	
	I = 5.5mT	
	J = 6.0mT	
	K = 6.5mT	
	L = 7.0mT	
	M = 7.5mT	
	N = 8.0mT	
	O = 9.0mT	
	P = 10.0mT	
	Q = 11.0mT	
	R = 12.0mT	
	S = 13.0mT	
	T = 14.0mT	
	U = 14.5mT	
	V = 15.0mT	

Copyright © 2026 Texas Instruments Incorporated

5 Pin Configuration and Functions

For additional configuration information, see the *Mechanical, Packaging, and Orderable Information*.

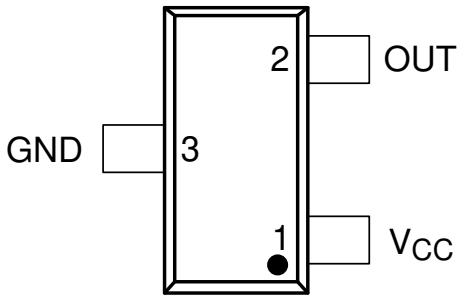

Figure 5-1. DBZ Package 3-Pin SOT-23 Top View

Table 5-1. Pin Functions

PIN		TYPE	DESCRIPTION
NAME	DBZ		
GND	3	Ground	Ground pin
OUT	2	Output	Hall sensor open-drain output. Requires a resistor pullup, typically 10kΩ.
V_{CC}	1	Power	2.5V to 28V power supply. Bypass this pin to GND as close to the device as possible with a 0.1µF (minimum) capacitor rated for V_{CC}.

Copyright © 2026 Texas Instruments Incorporated

6 Specifications

6.1 Absolute Maximum Ratings

over operating free-air temperature range (unless otherwise noted) (1)

		MIN	MAX	UNIT
Power supply voltage	V_{CC}	-0.3	30	V
	Voltage ramp rate (V_{CC}), V_{CC} < 5V	Unlimited		V/µs
	Voltage ramp rate (V_{CC}), V_{CC} > 5V	0	2	
Output pin voltage		–0.5	30	V
Magnetic flux density, B_{MAX}		Unlimited		
Operating junction temperature, T_J		–40	150	°C
Storage temperature, T_{stg}		–65	150	°C

(1) Operation outside the Absolute Maximum Ratings may cause permanent device damage. Absolute Maximum Ratings do not imply functional operation of the device at these or any other conditions beyond those listed under Recommended Operating Conditions. If used outside the Recommended Operating Conditions but within the Absolute Maximum Ratings, the device may not be fully functional, and this may affect device reliability, functionality, performance, and shorten the device lifetime.

6.2 ESD Ratings

			VALUE	UNIT
$V_{(ESD)}$	Electrostatic discharge	Human body model (HBM), per ANSI/ESDA/JEDEC JS-001, all pins(1)	±8000	V
		Charged device model (CDM), per ANSI/ESDA/JEDEC JS-002(2)	±2000	

(1) JEDEC document JEP155 states that 500V HBM allows safe manufacturing with a standard ESD control process.
(2) JEDEC document JEP155 states that 250V CDM allows safe manufacturing with a standard ESD control process.

6.3 Recommended Operating Conditions

over operating free-air temperature range (unless otherwise noted)

		MIN	MAX	UNIT
V_{CC}	Power supply voltage	2.5	28	V
V_O	Output pin voltage (OUT)	0	28	V
I_{SINK}	Output pin current sink (OUT)(1)	0	12	mA
T_A	Operating ambient temperature	–40	125	°C

(1) Power dissipation and thermal limits must be observed.

6.4 Thermal Information

THERMAL METRIC(1)		TMAG5013 DBZ (SOT-23) 3 PINS	UNIT
$R_{\theta JA}$	Junction-to-ambient thermal resistance	211.4	°C/W
$R_{\theta JC(top)}$	Junction-to-case (top) thermal resistance	128.7	°C/W
$R_{\theta JB}$	Junction-to-board thermal resistance	74.5	°C/W
Ψ_{JT}	Junction-to-top characterization parameter	22.2	°C/W
Ψ_{JB}	Junction-to-board characterization parameter	74.0	°C/W

(1) For more information about traditional and new thermal metrics, see the Semiconductor and IC Package Thermal Metrics application note.

Copyright © 2026 Texas Instruments Incorporated

6.5 Electrical Characteristics

over operating free-air temperature range and V_{CC} = 2.5V to 28V (unless otherwise noted). Typical specifications are at T_A = 25°C and V_{CC} = 12V (unless otherwise noted).

PARAMETER		TEST CONDITIONS	MIN	TYP	MAX	UNIT
POWER SUPPLY						
I_{ACTIVE}	Operating supply current	V_{CC} = 2.5V to 28V, T_A = 25°C		1.2		mA
		V_{CC} = 2.5V to 28V, T_A = –40°C to 125°C		1.2	3.2	
t_{ON}	Power-on time			30	50	µs
OPEN DRAIN OUTPUT (OUT)						
$r_{DS(on)}$	FET on-resistance	V_{CC} = 3.3V, I_O = 10mA, T_A = 25°C		25		Ω
		V_{CC} = 3.3V, I_O = 10mA, T_A = 125°C		36	54	Ω
I_{LKG}	Off-state leakage current	Output Hi-Z			1	µA
I_{OCP}	Output overcurrent protection level	OUT shorted to V_{CC}	12	25	58	mA

6.6 Switching Characteristics

over operating free-air temperature range and V_{CC} = 2.5V to 28V (unless otherwise noted). Typical specifications are at T_A = 25°C and V_{CC} = 12V (unless otherwise noted).

PARAMETER		TEST CONDITIONS	MIN	TYP	MAX	UNIT
OPEN-DRAIN OUTPUT (OUT)						
t_d	Output delay time	B = B_{RP} – 10mT to B_{OP} + 10mT in 1µs		13	17	µs
t_f	Output fall time (90% to 10%)	R1 = 1kΩ, C_O = 50pF, V_{CC} = 3.3V		10		ns

6.7 Magnetic Characteristics

over operating free-air temperature range and V_{CC} = 2.5V to 28V (unless otherwise noted). Typical specifications are at T_A = 25°C and V_{CC} = 12V (unless otherwise noted).

PARAMETER		TEST CONDITIONS	MIN	TYP	MAX	UNIT[1]
Bandwidth						
f_{BW}	Bandwidth[2]		20	30		kHz
TMAG5013LA: ±1.5mT Latch						
B_{OP}	Operate point	V_{CC} = 12V, T_A = 25°C	0.8	1.5	2	mT
		T_A = –40°C to 125°C	0.6	1.5	2.3	
B_{RP}	Release point	V_{CC} = 12V, T_A = 25°C	-2	-1.5	-0.8	mT
		T_A = –40°C to 125°C	-2.3	-1.5	-0.6	
B_{hys}	Hysteresis; B_{hys} = (B_{OP} – B_{RP})	V_{CC} = 12V, T_A = 25°C	1.8	3		mT
		T_A = –40°C to 125°C	1.8	3		
B_O	Magnetic offset; B_O = (B_{OP} + B_{RP}) / 2	V_{CC} = 12V, T_A = 25°C	-0.5	0	0.5	mT
		T_A = –40°C to 125°C	-0.7	0	0.7	
TMAG5013LD: ±3.0mT Latch (Preview Only)						
B_{OP}	Operate point	V_{CC} = 12V, T_A = 25°C	2.3	3.0	3.7	mT
		T_A = –40°C to 125°C	1.7	3.0	4.0	
B_{RP}	Release point	V_{CC} = 12V, T_A = 25°C	–3.7	-3.0	-2.3	mT
		T_A = –40°C to 125°C	–4.0	-3.0	-1.7	
B_{hys}	Hysteresis; B_{hys} = (B_{OP} – B_{RP})	V_{CC} = 12V, T_A = 25°C	4.9	6.0		mT
		T_A = –40°C to 125°C	3.6	6.0		
B_O	Magnetic offset; B_O = (B_{OP} + B_{RP}) / 2	V_{CC} = 12V, T_A = 25°C	–0.5	0	0.5	mT
		T_A = –40°C to 125°C	–1	0	1	

Copyright © 2026 Texas Instruments Incorporated

over operating free-air temperature range and V_{CC} = 2.5V to 28V (unless otherwise noted). Typical specifications are at T_A = 25°C and V_{CC} = 12V (unless otherwise noted).

PARAMETER		TEST CONDITIONS	MIN	TYP	MAX	UNIT(1)
TMAG5013LJ: ±6mT Latch						
B_{OP}	Operate point	V_{CC} = 12V, T_A = 25°C	4.5	6	7.5	mT
		T_A = –40°C to 125°C	4	6	8	
B_{RP}	Release point	V_{CC} = 12V, T_A = 25°C	-7.5	-6	-4.5	mT
		T_A = –40°C to 125°C	-8	-6	-4	
B_{hys}	Hysteresis; $B_{hys} = (B_{OP} – B_{RP})$	V_{CC} = 12V, T_A = 25°C	9	12	15	mT
		T_A = –40°C to 125°C	8	12	16	
B_O	Magnetic offset; $B_O = (B_{OP} + B_{RP}) / 2$	V_{CC} = 12V, T_A = 25°C	-1	0	1	mT
		T_A = –40°C to 125°C	-1.2	0	1.2	

(1) 1mT = 10 Gauss.
(2) Bandwidth describes the fastest changing magnetic field that can be detected and translated to the output.

Copyright © 2026 Texas Instruments Incorporated

6.8 Typical Characteristics

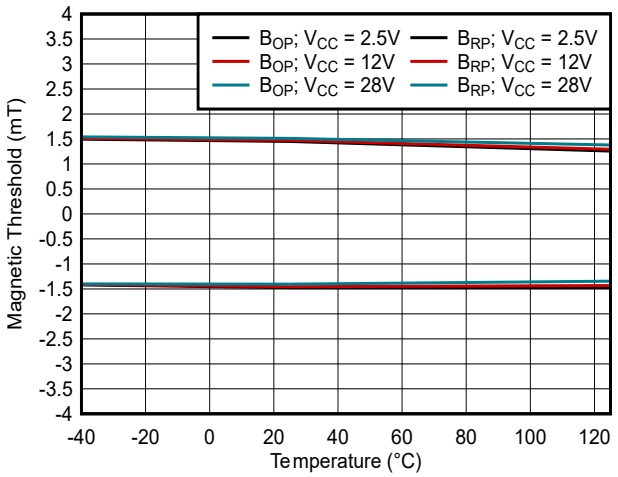

Figure 6-1. LAx Magnetic Thresholds vs. Temperature

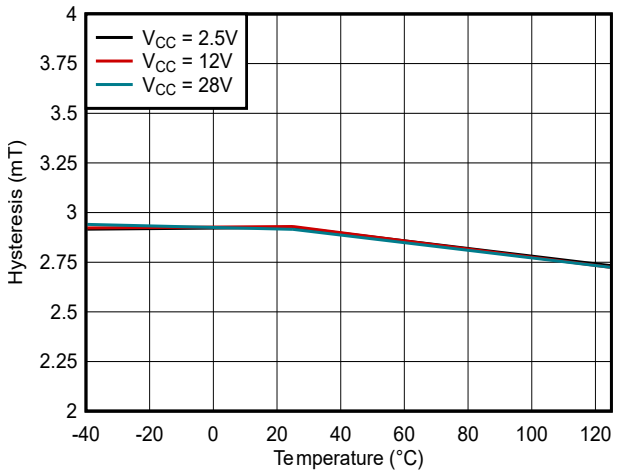

Figure 6-2. LAx Hysteresis vs. Temperature

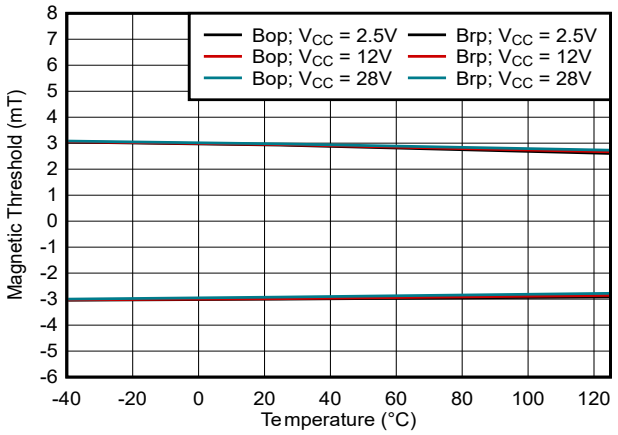

Figure 6-3. LDx Magnetic Thresholds vs. Temperature

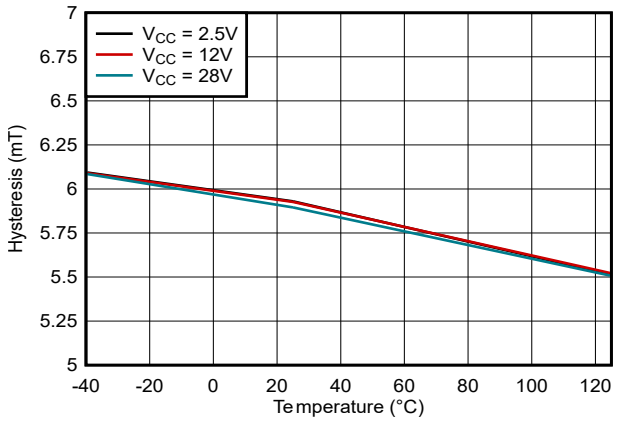

Figure 6-4. LDx Hysteresis vs. Temperature

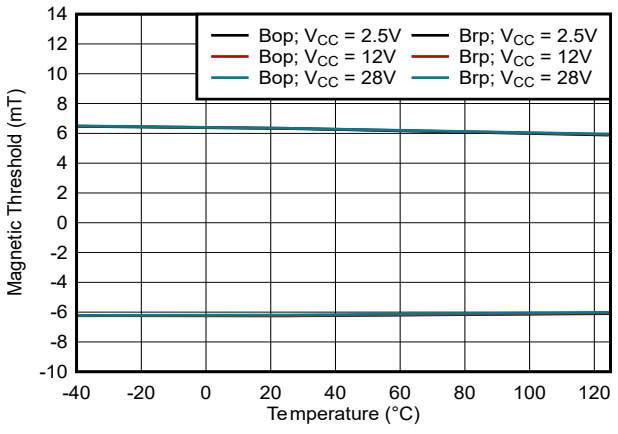

Figure 6-5. LJx Magnetic Thresholds vs. Temperature

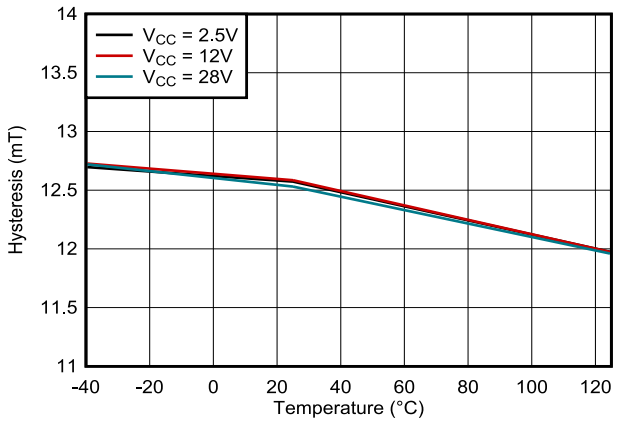

Figure 6-6. LJx Hysteresis vs. Temperature

Copyright © 2026 Texas Instruments Incorporated

6.8 Typical Characteristics (continued)

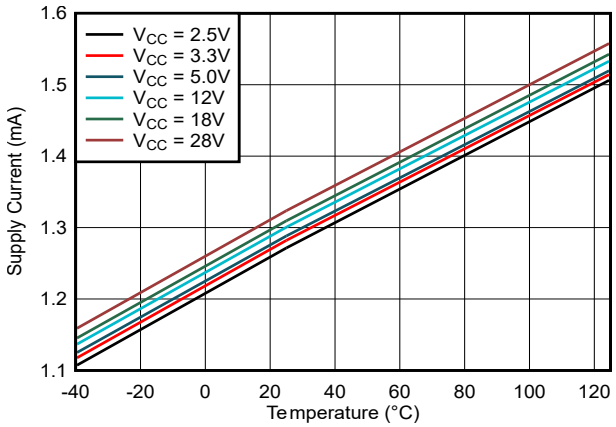

Figure 6-7. Supply Current vs. Temperature

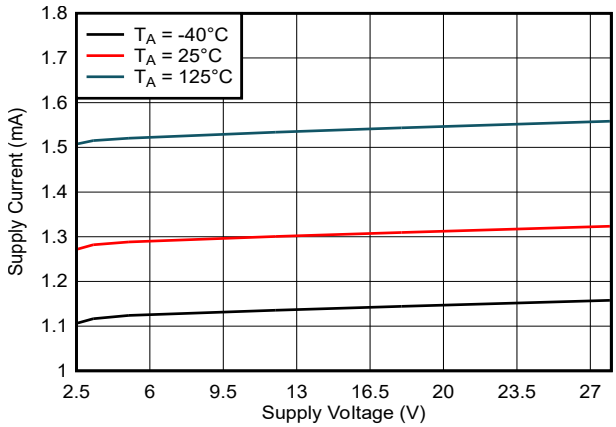

Figure 6-8. Supply Current vs. Supply Voltage

7 Detailed Description

7.1 Overview

The TMAG5013 device is a chopper-stabilized Hall sensor with a digital latch or switch output for magnetic sensing applications. The TMAG5013 device can be powered with a supply voltage ranging from 2.5V to 28V.

The field polarity is defined as follows: a south pole near the marked side of the package induces a positive magnetic flux density on the sensor, while a north pole near the marked side of the package induces a negative magnetic flux density on the sensor.

The output state is dependent on the magnetic flux density perpendicular to the package. A positive magnetic flux density greater than the operate point threshold, B_{OP}, causes the output to pull low for the xx0 device versions (release high for the inverted xx1 device versions). A negative magnetic flux density less than the release point threshold, B_{RP}, causes the output to release high for the xx0 device versions (pull low for the inverted xx1 device versions). Hysteresis is included in between the operate point and the release point to help prevent magnetic noise from accidentally tripping the output.

An external pullup resistor is required on the OUT pin. The OUT pin can be pulled up to V_{CC}, or to a different voltage supply. This allows for easier interfacing with controller circuits.

7.2 Functional Block Diagram

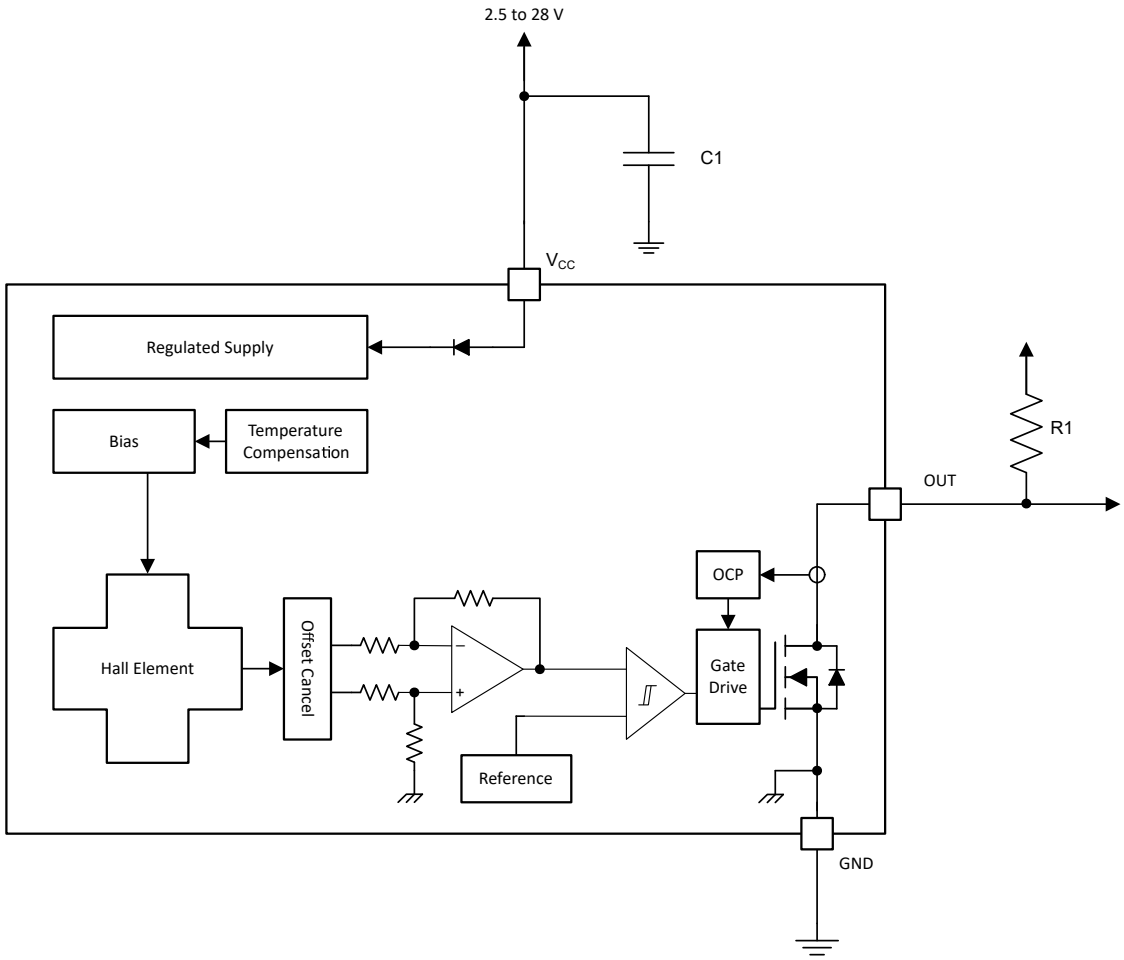

Copyright © 2026 Texas Instruments Incorporated

7.3 Feature Description

7.3.1 Field Direction Definition

Figure 7-1 shows that a positive magnetic flux density is defined as the presence of a south pole near the marked side of the package.

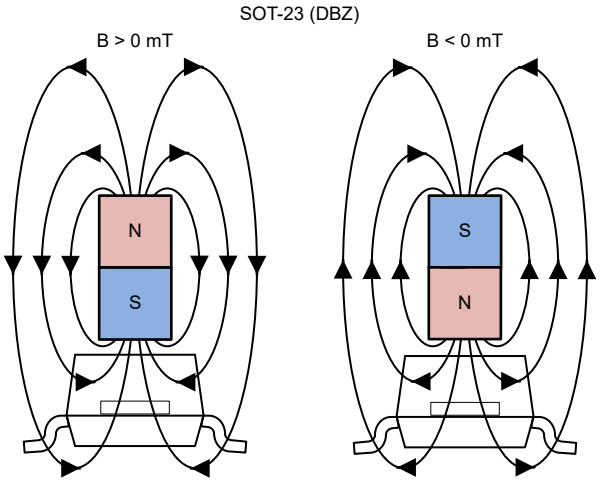

N = North pole, S = South pole

Figure 7-1. Field Direction Definition

7.3.2 Device Output

If the device is powered on with a magnetic flux density between B_{RP} and B_{OP}, then the device output is Hi-Z. If the magnetic flux density is greater than B_{OP}, then the output is pulled low (released high for the inverted xx1 versions). If the magnetic flux density is less than B_{RP}, then the output is released high according to the output reference voltage and pullup resistor (pulled low for the inverted xx1 versions).

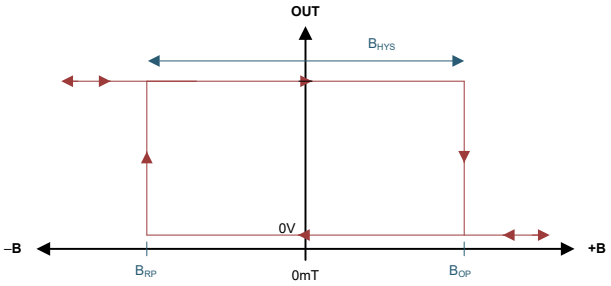

Figure 7-2. Latch, Active Low (Lx0 Versions)

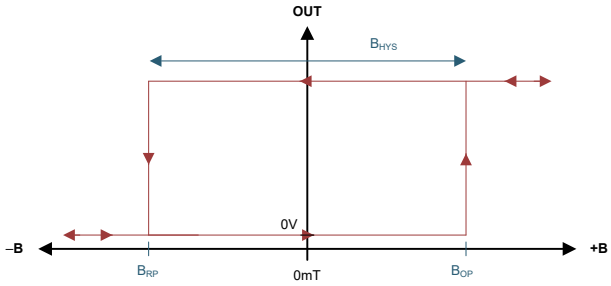

Figure 7-3. Latch, Active High (Lx1 Versions)

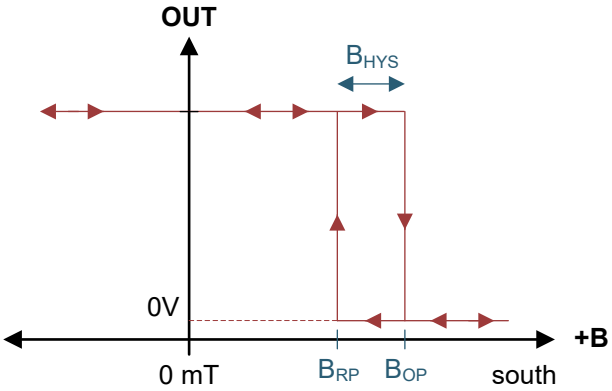

Figure 7-4. Unipolar Switch, Active Low (Ux0 Versions)

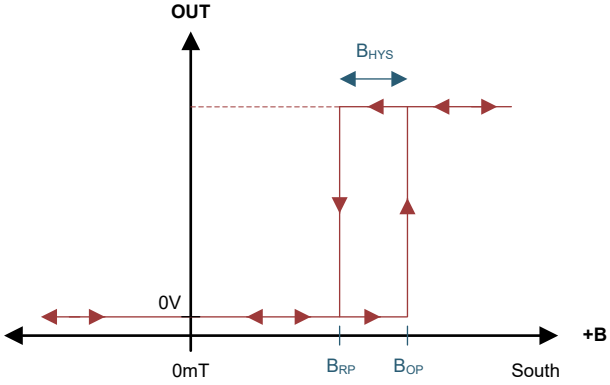

Figure 7-5. Unipolar Switch, Active High State (Ux1 Versions)

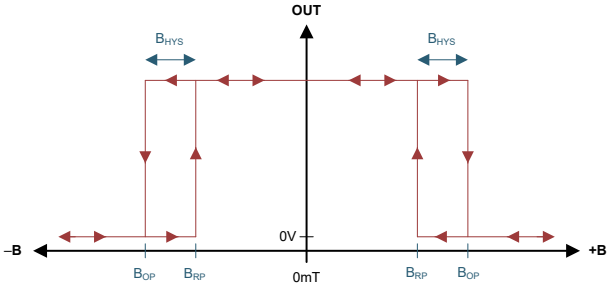

Figure 7-6. Omnipolar Switch, Active Low (Bx0 Versions)

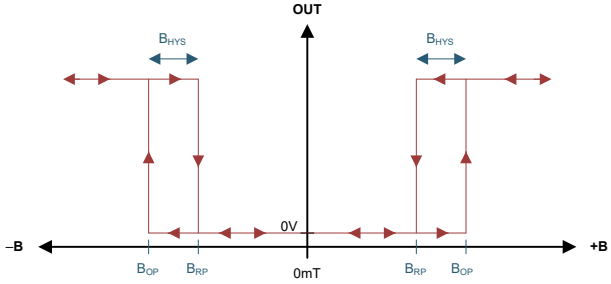

Figure 7-7. Omnipolar Switch, Active High (Bx1 Versions)

Copyright © 2026 Texas Instruments Incorporated

7.3.3 Power-On Time

After the minimum value for V_{CC} is reached, the TMAG5013 takes time t_{on} to power up before the OUT pin is valid. While $V_{CC} < V_{CC,MIN}$, the output is held Hi-Z. A pulse as shown in Figure 7-8 and Figure 7-9 occurs at the end of t_{on}. This pulse can allow the host processor to determine when the TMAG5013 output is valid after start-up. The power-up sequence, including the pulse, is the same for all device output versions. Case 1, 2, 3 and 4 below show examples of valid outputs for the active low output versions (TMAG5013xx0). In Case 1 (Figure 7-8) and Case 2 (Figure 7-9), the output is defined assuming a constant magnetic flux density $B > B_{OP}$ and $B < B_{RP}$.

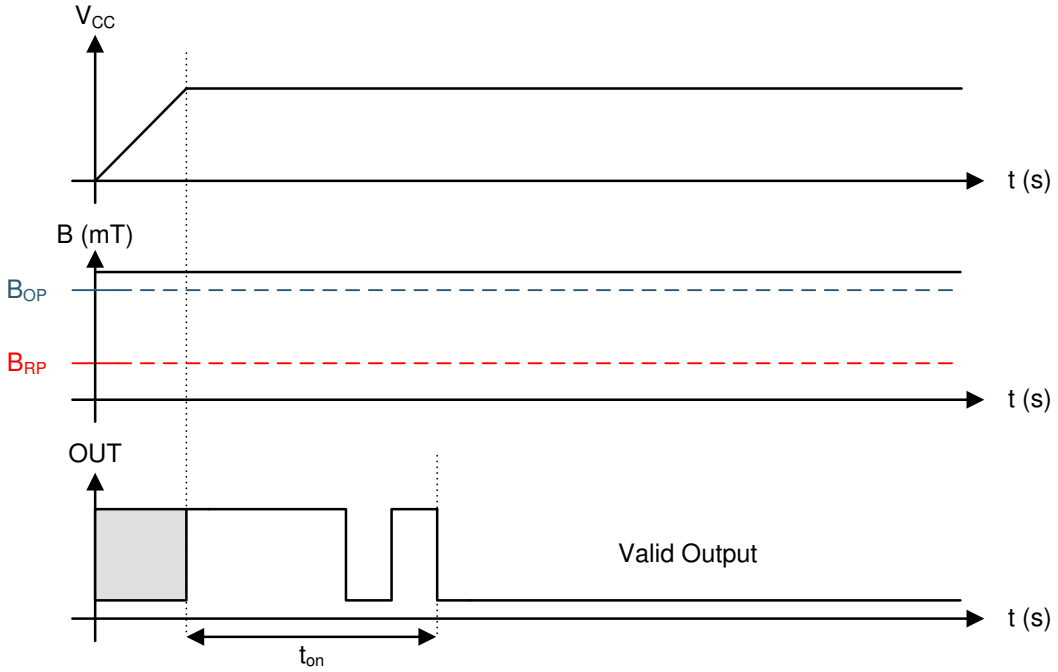

Figure 7-8. Case 1: Power On When $B > B_{OP}$, Active Low Output

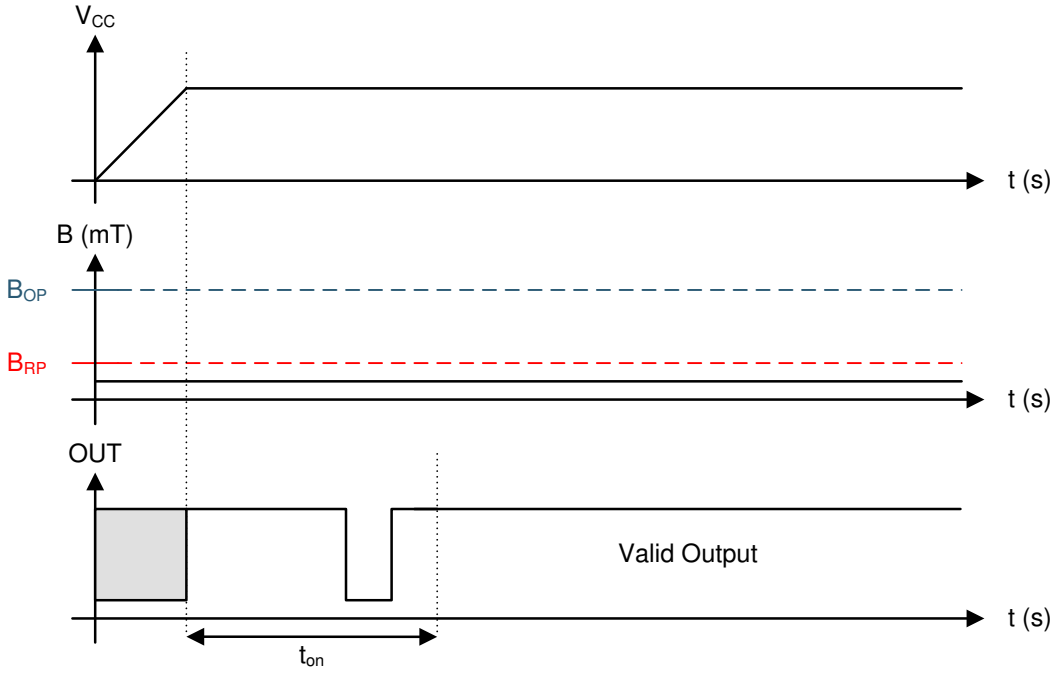

Figure 7-9. Case 2: Power On When $B < B_{RP}$, Active Low Output

Copyright © 2026 Texas Instruments Incorporated

If the device is powered on with the magnetic flux density B_{RP} < B < B_{OP}, then the device output is Hi-Z. After t_{on}, if the magnetic flux density changes such that B > B_{OP}, the output is pulled low. If the magnetic flux density changes such that B < B_{RP}, the output is released. Case 3 (Figure 7-10) and Case 4 (Figure 7-11) show examples of this behavior.

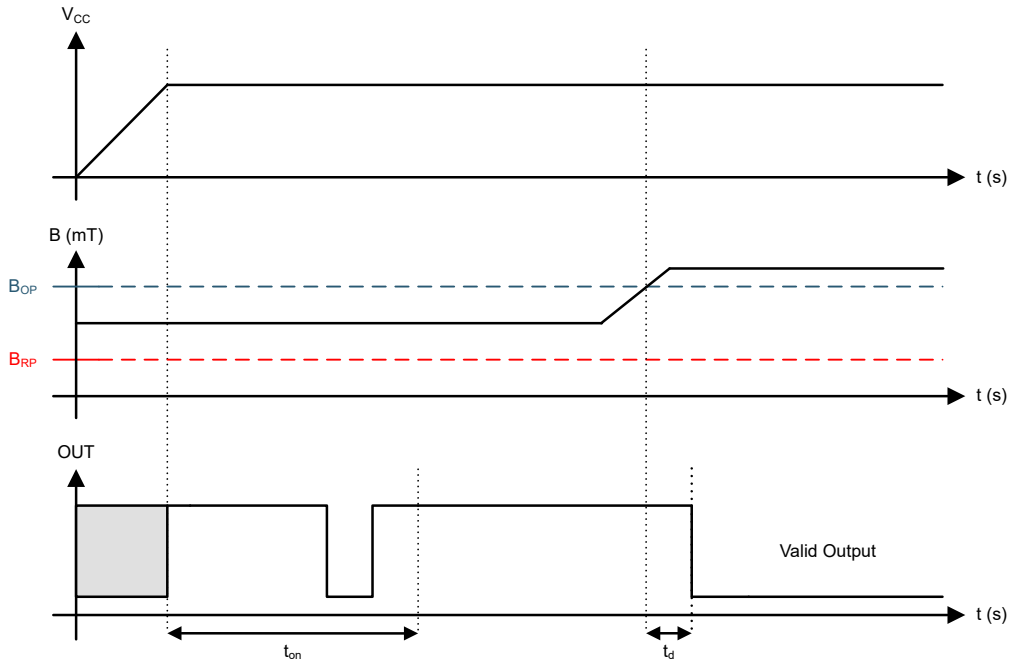

Figure 7-10. Case 3: Power On When B_{RP} < B < B_{OP}, Followed by B > B_{OP}, Active Low Output

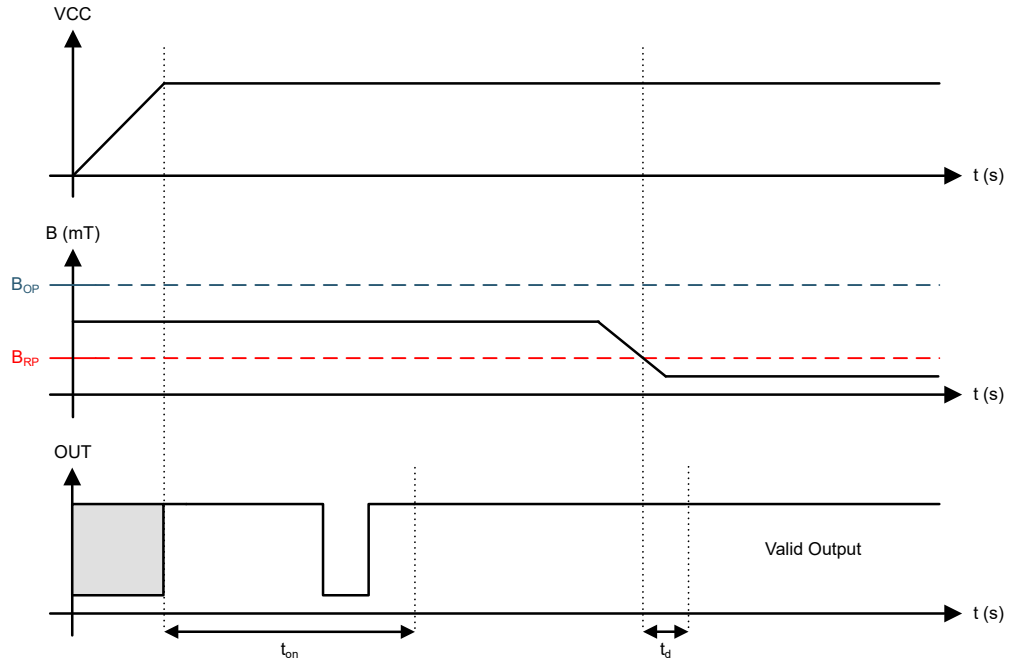

Figure 7-11. Case 4: Power On When B_{RP} < B < B_{OP}, Followed by B < B_{RP}, Active Low Output

Copyright © 2026 Texas Instruments Incorporated

7.3.4 Output Stage

Figure 7-12 shows the TMAG5013 open-drain NMOS output structure, rated to sink up to 12mA of current. For proper operation, use Equation 1 to calculate possible values of pullup resistor R1.

$$\frac{V_{ref}\,max}{10mA} \leq R1 \leq \frac{V_{ref}\,min}{100\mu A} \quad (1)$$

The size of R1 is a tradeoff between the OUT rise time and the current when OUT is pulled low. A lower current is generally better, however faster transitions and bandwidth require a smaller resistor for faster switching.

TI recommends a value of R1 > 10kΩ so that the output driver pulls the OUT pin close to GND.

Note

V_{ref} is not restricted to V_{CC}. The allowable voltage range of this pin is specified in the *Absolute Maximum Ratings*.

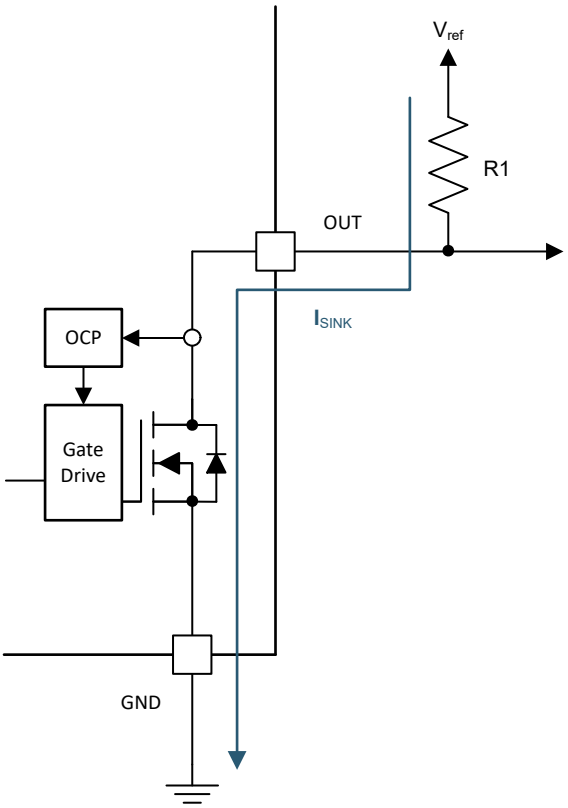

Figure 7-12. NMOS Open-Drain Output

7.3.5 Protection Circuits

The TMAG5013 device is fully protected against overcurrent conditions. Table 7-1 lists a summary of the protection circuits.

Table 7-1. Protection Circuit Summary

FAULT	CONDITION	DEVICE	DESCRIPTION	RECOVERY
FET overload (OCP)	$I_{SINK} \geq I_{OCP}$	Operating	Output current is clamped to I_{OCP}	$I_O < I_{OCP}$

7.3.5.1 Overcurrent Protection (OCP)

An analog current-limit circuit limits the current through the FET. The driver current is clamped to I_{OCP}. During this clamping, the $r_{DS(on)}$ of the output FET is increased from the nominal value.

7.3.6 Hall Element Location

Hall Element Location shows the location of the sensing element inside the package.

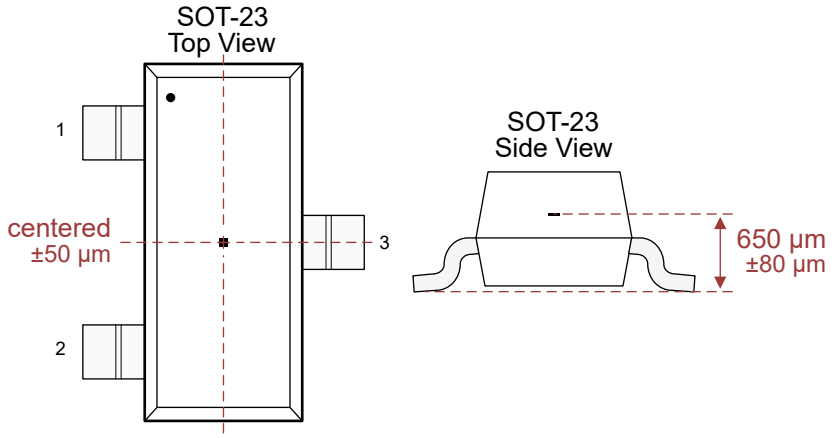

Figure 7-13. Hall Element Location

7.4 Device Functional Modes

The TMAG5013 device is active only when V_{CC} is between 2.5V and 28V.

Copyright © 2026 Texas Instruments Incorporated

8 Application and Implementation

Note

Information in the following applications sections is not part of the TI component specification, and TI does not warrant its accuracy or completeness. TI's customers are responsible for determining suitability of components for their purposes, as well as validating and testing their design implementation to confirm system functionality.

8.1 Application Information

The TMAG5013 Hall-effect latch/switch is used in magnetic-field sensing applications. When the magnetic flux density exceeds B_{OP} along the axis of sensitivity, the output of the sensor is pulled low to GND (xx0 versions) or released high (xx1 versions). The output can be read by a GPIO pin on a controller, enabling the system to recognize the magnetic threshold has been crossed.

Due to complex, non-linear behavior of magnets, it can be difficult to determine the appropriate magnet characteristics required to make sure the system works as intended. Therefore, TI recommends to begin the design process with experimentation to solve for a design that works. To help facilitate rapid design iteration, the *TI Magnetic Sense Simulator (TIMSS)* web tool provides a visual interface that emulates typical sensor performance in system designs. TIMSS simulations provide an understanding of expected magnetic field behavior across a range of motion, and the simulations are run in a few seconds.

8.2 Typical Applications

8.2.1 Standard Circuit

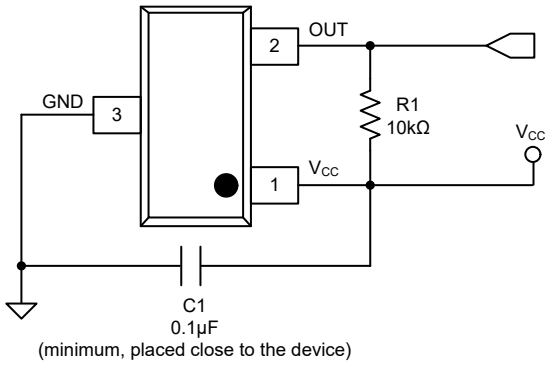

Figure 8-1. Typical Application Circuit

Use Equation 1 to calculate appropriate values for R1.

8.2.1.1 Design Requirements

This section provides an example using the *TI Magnetic Sense Simulator (TIMSS)* web tool for a quadrature encoding application. The following table lists the design parameters related to the movement of the magnet rotating above two TMAG5013L devices, placed 90° electrically out of phase.

Table 8-1. Design Parameters

DESIGN PARAMETER	EXAMPLE VALUE
Supply voltage, V_{CC}	3.2V to 3.4V
Bypass capacitor	0.1µF
System bandwidth, f_{BW}	10kHz
Magnet range of motion	360°
Magnet shape	Ring
Magnet inner diameter	20mm
Magnet outer diameter	25mm
Magnet height	3mm
Magnet type	BDM-12
Magnet to PCB airgap	5mm
Part number	TMAG5013LD0

8.2.1.2 Detailed Design Procedure

As the magnet rotates from 0° to 360° above the two TMAG5013LD0 devices, the magnetic flux density seen by each TMAG5013 changes. In this design example, the TMAG5013 has a latch output, allowing the system to determine the alternating polarity of the magnetic field. When the magnetic flux density crosses the B_{OP} and B_{RP} thresholds of each device, corresponding falling or rising edges occur on the device outputs, respectively.

8.2.1.3 Application Curves

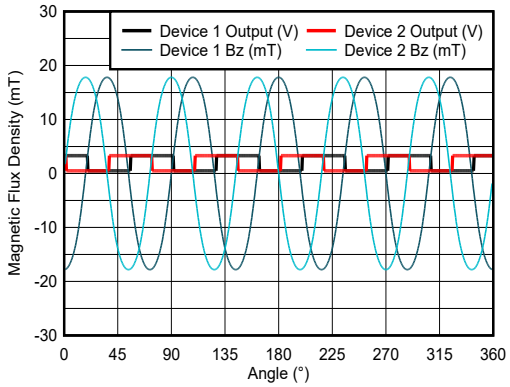

Figure 8-2. TMAG5013LD0 Response to Alternating Magnetic Field

Copyright © 2026 Texas Instruments Incorporated

8.2.2 Alternative Two-Wire Application

For systems that require minimal wire count, the device output can be connected to V_{CC} through a resistor, and the total supplied current can be sensed near the controller.

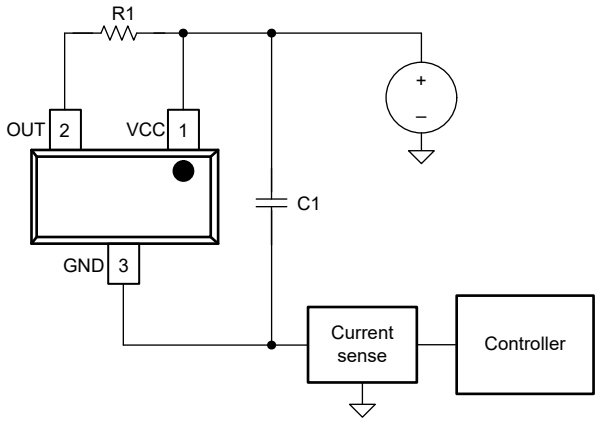

Figure 8-3. 2-Wire Application

Current can be sensed using a shunt resistor or other circuitry.

8.2.2.1 Design Requirements

Table 8-2 lists the related design parameters.

Table 8-2. Design Parameters

DESIGN PARAMETER	REFERENCE	EXAMPLE VALUE
Supply voltage	V_{CC}	12V
OUT resistor	R1	1kΩ
Bypass capacitor	C1	0.1µF
Current when B < B_{RP}	$I_{RELEASE}$	1.2mA
Current when B > B_{OP}	$I_{OPERATE}$	13.2mA

8.2.2.2 Detailed Design Procedure

When the open-drain output of the device is high-impedance, current through the path equals the I_{CC} of the device (approximately 1.2mA).

When the output pulls low, a parallel current path is added, equal to V_{CC} / (R1 + $r_{DS(on)}$). Using 12V and 1kΩ, the parallel current is approximately 12mA, making the total current approximately 13.2mA.

The local bypass capacitor C1 must be at least 0.1µF, and a larger value if there is high inductance in the power line interconnect.

8.3 Power Supply Recommendations

The TMAG5013 device is designed to operate from an input voltage supply range between 2.5V and 28V. A 0.1µF (minimum) ceramic capacitor rated for V_{CC} must be placed as close to the TMAG5013 device as possible. Larger values of the bypass capacitor can be needed to attenuate any significant high-frequency ripple and noise components generated by the power source. TI recommends limiting the supply voltage variation to less than 50mV_{PP}.

Copyright © 2026 Texas Instruments Incorporated

8.4 Layout

8.4.1 Layout Guidelines

The bypass capacitor must be placed near the TMAG5013 device for efficient power delivery with minimal inductance. The external pullup resistor must be placed near the microcontroller input to provide the most stable voltage at the input; alternatively, an integrated pullup resistor within the GPIO of the microcontroller can be used.

Generally, using PCB copper planes underneath the TMAG5013 device has no effect on magnetic flux, and does not interfere with device performance. This is because copper is not a ferromagnetic material. However, if nearby system components contain iron or nickel, those components can redirect magnetic flux in unpredictable ways.

8.4.2 Layout Example

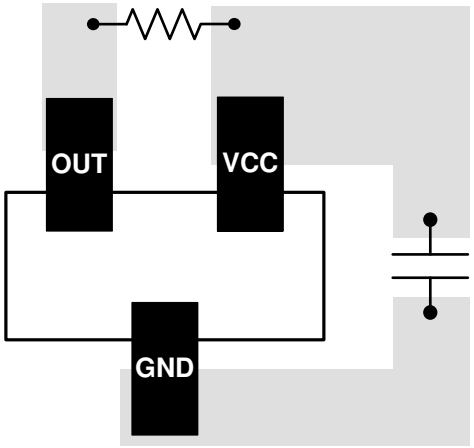

Figure 8-4. TMAG5013 Layout Example

Copyright © 2026 Texas Instruments Incorporated

9 Device and Documentation Support

9.1 Receiving Notification of Documentation Updates

To receive notification of documentation updates, navigate to the device product folder on ti.com. Click on *Notifications* to register and receive a weekly digest of any product information that has changed. For change details, review the revision history included in any revised document.

9.2 Support Resources

TI E2E™ support forums are an engineer's go-to source for fast, verified answers and design help — straight from the experts. Search existing answers or ask your own question to get the quick design help you need.

Linked content is provided "AS IS" by the respective contributors. They do not constitute TI specifications and do not necessarily reflect TI's views; see TI's Terms of Use.

9.3 Trademarks

TI E2E™ is a trademark of Texas Instruments.
All trademarks are the property of their respective owners.

9.4 Electrostatic Discharge Caution



This integrated circuit can be damaged by ESD. Texas Instruments recommends that all integrated circuits be handled with appropriate precautions. Failure to observe proper handling and installation procedures can cause damage.

ESD damage can range from subtle performance degradation to complete device failure. Precision integrated circuits may be more susceptible to damage because very small parametric changes could cause the device not to meet its published specifications.

9.5 Glossary

TI Glossary	This glossary lists and explains terms, acronyms, and definitions.

10 Revision History

NOTE: Page numbers for previous revisions may differ from page numbers in the current version.

Changes from Revision A (November 2026) to Revision B (November 2026)	Page
• Added LA1, LD1, LJ0 variants in the *Device Comparison* table	2
• Added TMAG5013LJ to the *Magnetic Characteristics* table	6

Changes from Revision * (September 2026) to Revision A (November 2026)	Page
• Updated the device status of the LA0 variant from *Advanced* to *Production* data	1

11 Mechanical, Packaging, and Orderable Information

The following pages include mechanical, packaging, and orderable information. This information is the most current data available for the designated devices. This data is subject to change without notice and revision of this document. For browser-based versions of this datasheet, refer to the left-hand navigation.

Copyright © 2026 Texas Instruments Incorporated

IMPORTANT NOTICE AND DISCLAIMER

TI PROVIDES TECHNICAL AND RELIABILITY DATA (INCLUDING DATASHEETS), DESIGN RESOURCES (INCLUDING REFERENCE DESIGNS), APPLICATION OR OTHER DESIGN ADVICE, WEB TOOLS, SAFETY INFORMATION, AND OTHER RESOURCES “AS IS” AND WITH ALL FAULTS, AND DISCLAIMS ALL WARRANTIES, EXPRESS AND IMPLIED, INCLUDING WITHOUT LIMITATION ANY IMPLIED WARRANTIES OF MERCHANTABILITY, FITNESS FOR A PARTICULAR PURPOSE OR NON-INFRINGEMENT OF THIRD PARTY INTELLECTUAL PROPERTY RIGHTS.

These resources are intended for skilled developers designing with TI products. You are solely responsible for (1) selecting the appropriate TI products for your application, (2) designing, validating and testing your application, and (3) ensuring your application meets applicable standards, and any other safety, security, regulatory or other requirements.

These resources are subject to change without notice. TI grants you permission to use these resources only for development of an application that uses the TI products described in the resource. Other reproduction and display of these resources is prohibited. No license is granted to any other TI intellectual property right or to any third party intellectual property right. TI disclaims responsibility for, and you fully indemnify TI and its representatives against any claims, damages, costs, losses, and liabilities arising out of your use of these resources.

TI’s products are provided subject to TI’s Terms of Sale, TI’s General Quality Guidelines, or other applicable terms available either on ti.com or provided in conjunction with such TI products. TI’s provision of these resources does not expand or otherwise alter TI’s applicable warranties or warranty disclaimers for TI products. Unless TI explicitly designates a product as custom or customer-specified, TI products are standard, catalog, general purpose devices.

TI objects to and rejects any additional or different terms you may propose.

Copyright © 2026, Texas Instruments Incorporated

Last updated 10/2025