TLE206x,TLE206xA, TLE206xB FET-Input High-Output-Drive µPower Operational Amplifiers

1 Features

- Wide bandwidth: 1.1MHz GBW
- Low supply current: 120µA/Ch (typical)
- High output drive, specified into 100Ω loads
- Lower noise floor than earlier generations of low-power BiFET

2 Applications

- Full authority digital engine control
- Flight control unit
- Analog input module

3 Description

The TLE206x is a family of high voltage (36V) FET-Input operational amplifiers. These devices offer good DC precision and AC performance. This includes low noise floor and high slew rate, making TLE206x family a flexible, general-performance amplifier. TLE206x are available in standard packages PDIP and SOIC.

The TLE206xM, TLE206xAM, TLE206xBM devices use the original design with JFET-input transistors and On-chip Zener trimming of offset voltage. The TLE206xM, TLE206xAM, TLE206xBM are available in CDIP, LCCC and CFP package.

Package Information

PART NUMBER	PACKAGE(1)	PACKAGE SIZE(2)
TLE2061, TLE2062	P (PDIP, 8)	9.81mm × 9.43mm
	D (SOIC, 8)	4.9mm × 6mm
TLE2061A	P (PDIP, 8)	9.81mm × 9.43mm
TLE2062A	D (SOIC, 8)	4.9mm × 6mm
TLE2062AM	JG (CDIP, 8)	9.6mm × 6.67mm
	D (SOIC, 8)	4.9mm × 6mm
TLE2064, TLE2064A	N (PDIP, 14)	19.3mm × 9.4mm
	D (SOIC, 14)	8.65mm × 6mm
TLE2064M	FK (LCCC, 20)	8.89mm × 8.89mm
	J (CDIP, 14)	19.56mm × 6.67mm
	D (SOIC, 14)	8.65mm × 6mm
TLE2061M, TLE2061AM	JG (CDIP, 8)	9.6mm × 6.67mm
	FK (LCCC, 20)	8.89mm × 8.89mm
TLE2064BM	J (CDIP, 14)	19.56mm × 6.67mm
	FK (LCCC, 20)	8.89mm × 8.89mm
TLE2061BM, TLE2062BM, TLE2062M	JG (CDIP, 8)	9.6mm × 6.67mm
TLE2064AM	J (CDIP, 14)	19.56mm × 6.67mm
	CFP (W, 14)	9.21mm × 6.3mm
	FK (LCCC, 20)	8.89mm × 8.89mm
	D (SOIC, 14)	8.65mm × 6mm

(1) For more information, see Section 10.
(2) The package size (length × width) is a nominal value and includes pins, where applicable.

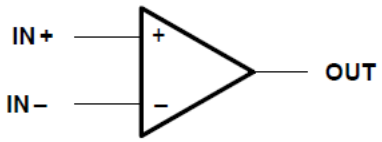

Symbol

An IMPORTANT NOTICE at the end of this data sheet addresses availability, warranty, changes, use in safety-critical applications, intellectual property matters and other important disclaimers. PRODUCTION DATA.

Table of Contents

1 Features....1
2 Applications....1
3 Description....1
4 Available Options....3
5 Specifications....6
5.1 Absolute Maximum Ratings....6
5.2 Recommended Operating Conditions....7
5.3 TLE2061C Electrical Characteristics....7
5.4 TLE2061C Operating Characteristics....8
5.5 TLE2061C Electrical Characteristics....9
5.6 TLE2061C Operating Characteristics....10
5.7 TLE2061I Electrical Characteristics....10
5.8 TLE2061I Operating Characteristics....11
5.9 TLE2061I Electrical Characteristics....12
5.10 TLE2061I Operating Characteristics....13
5.11 TLE2061M Electrical Characteristics....14
5.12 TLE2061M Operating Characteristics....15
5.13 TLE2061M Electrical Characteristics....16
5.14 TLE2061M Operating Characteristics....17
5.15 TLE2062C Electrical Characteristics....17
5.16 TLE2062C Operating Characteristics....18
5.17 TLE2062C Electrical Characteristics....19
5.18 TLE2062C Operating Characteristics....20
5.19 TLE2062I Electrical Characteristics....21
5.20 TLE2062I Operating Characteristics....22
5.21 TLE2062I Electrical Characteristics....22
5.22 TLE2062I Operating Characteristics....23
5.23 TLE2062M Electrical Characteristics....24
5.24 TLE2062M Operating Characteristics....25
5.25 TLE2062M Electrical Characteristics....26
5.26 TLE2062M Operating Characteristics....27
5.27 TLE2064C Electrical Characteristics....28
5.28 TLE2064C Operating Characteristics....29
5.29 TLE2064C Electrical Characteristics....30
5.30 TLE2064C Operating Characteristics....31
5.31 TLE2064I Electrical Characteristics....32
5.32 TLE2064I Operating Characteristics....33
5.33 TLE2064I Electrical Characteristics....34
5.34 TLE2064I Operating Characteristics....35
5.35 TLE2064M Electrical Characteristics....36
5.36 TLE2064M Operating Characteristics....37
5.37 TLE2064M Electrical Characteristics....38
5.38 TLE2064M Operating Characteristics....39
5.39 Typical Characteristics....40
6 Parameter Measurement Information....43
6.1 Typical Values....43
6.2 Input Bias and Offset Current....43
7 Application and Implementation....44
7.1 Application Information....44
8 Device and Documentation Support....45
8.1 Receiving Notification of Documentation Updates....45
8.2 Support Resources....45
8.3 Trademarks....45
8.4 Electrostatic Discharge Caution....45
8.5 Glossary....45
9 Revision History....46
10 Mechanical, Packaging, and Orderable Information....47

Copyright © 2026 Texas Instruments Incorporated

4 Available Options

Table 4-1. TLE2061 Available Options

PACKAGED DEVICES					
T_A	V_{IOmax} at 25°C	SMALL OUTLINE (D) (1)	CHIP CARRIER (FK)	CERAMIC DIP (JG)	PLASTIC DIP (P)
0°C to 70°C	500µV	—	—	—	—
	1.5mV	TLE2061ACD	—	—	TLE2061ACP
	3mV	TLE2061CD	—	—	TLE2061CP
–40°C to 85°C	500µV	—	—	—	—
	1.5mV	TLE2061AID	—	—	TLE2061AIP
	3mV	TLE2061D	—	—	TLE2061IP
– 55°C to 125°C	500µV	—	—	TLE2061BMJG	—
	1.5mV		TLE2061AMFK	TLE2061AMJG	—
	3mV		TLE2061MFK	TLE2061MJG	—

(1) The D packages are available taped and reeled. Add R suffix to device type (that is, TLE2061ACDR). Chips are tested at 25°C.

Table 4-2. TLE2062 Available Options

PACKAGED DEVICES					
T_A	V_{IOmax} at 25°C	SMALL OUTLINE (D)(1)	CHIP CARRIER (FK)	CERAMIC DIP (JG)	PLASTIC DIP (P)
0°C to 70°C	1mV	TLE2062BCD	—	—	TLE2062BCP
	2mV	TLE2062ACD	—	—	TLE2062ACP
	4mV	TLE2062CD	—	—	TLE2062CP
– 40°C to 85°C	1mV	TLE2062BID	—	—	TLE2062BIP
	2mV	TLE2062AID	—	—	TLE2062AIP
	4mV	TLE2062ID	—	—	TLE2062IP
– 55°C to 125°C	1mV		—	TLE2062BMJG	—
	2mV	TLE2062AMD	TLE2062AMFK	TLE2062AMJG	—
	4mV		TLE2062MFK	TLE2062MJG	—

(1) The D packages are available taped and reeled. Add R suffix to device type (that is, TLE2082ACDR).

Table 4-3. TLE2064 Available Options

PACKAGED DEVICES						
T_A	V_{IOmax} at 25°C	SMALL OUTLINE (D)(1)	CHIP CARRIER (FK)	CERAMIC DIP (J)	PLASTIC DIP (N)	CERAMIC FLAT PACK (W)
0°C to 70°C	2mV	—			TLE2064BCN	
	4mV	TLE2064ACD	—	—	TLE2064ACN	—
	6mV	TLE2064CD			TLE2064CN	
-40°C to 85°C	2mV	—			TLE2064BIN	
	4mV	TLE2064AID	—	—	TLE2064AIN	—
	6mV	TLE2064ID			TLE2064IN	
-55°C to 125°C	2mV	—	TLE2064BMFK	TLE2064BMJ		—
	4mV	TLE2064AMD	TLE2064AMFK	TLE2064AMJ	—	TLE2064AMW
	6mV	TLE2064MD	TLE2064MFK	TLE2064MJ		TLE2064MW

(1) The D packages are available taped and reeled. Add R suffix to device type, (that is, TLE2064ACDR)

Copyright © 2026 Texas Instruments Incorporated

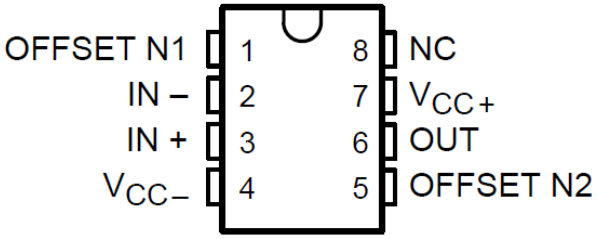

Figure 4-1. TLE2061M, TLE2061xM, JG Package, (Top View)

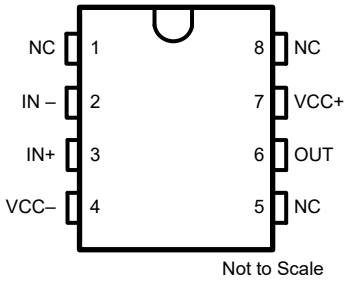

Figure 4-2. TLE2061, TLE2061A,D, P Package (Top View)

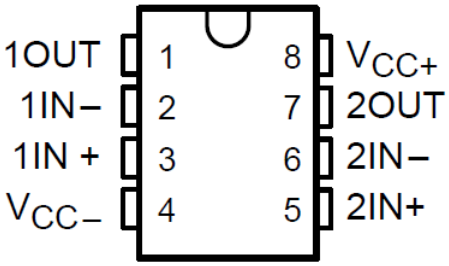

Figure 4-3. TLE2062, TLE2062A, and TLE2062B D, JG, or P Package (Top View)

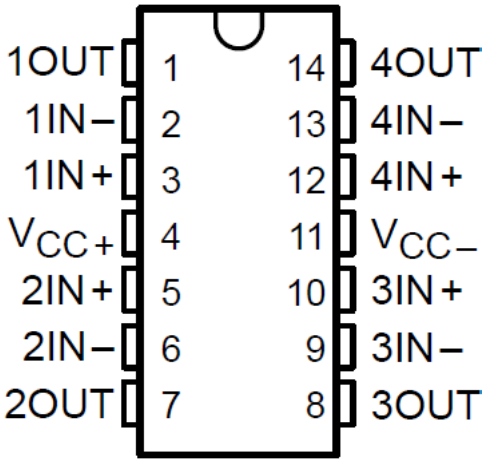

Figure 4-4. TLE2064, TLE2064A, and TLE2064B D, J, N, or W Package (Top View)

Copyright © 2026 Texas Instruments Incorporated

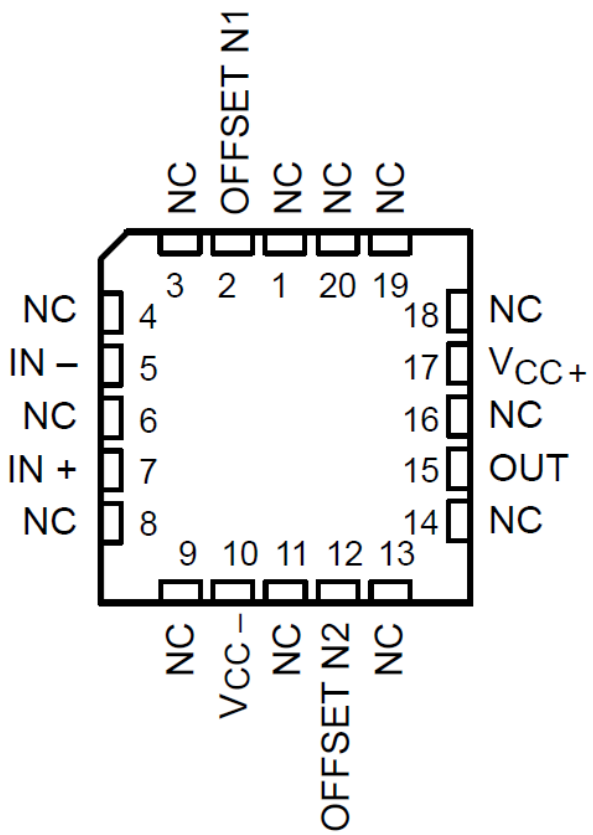

Figure 4-5. TLE2061M, TLE2061AM, and TLE2061BM FK Package (Top View)

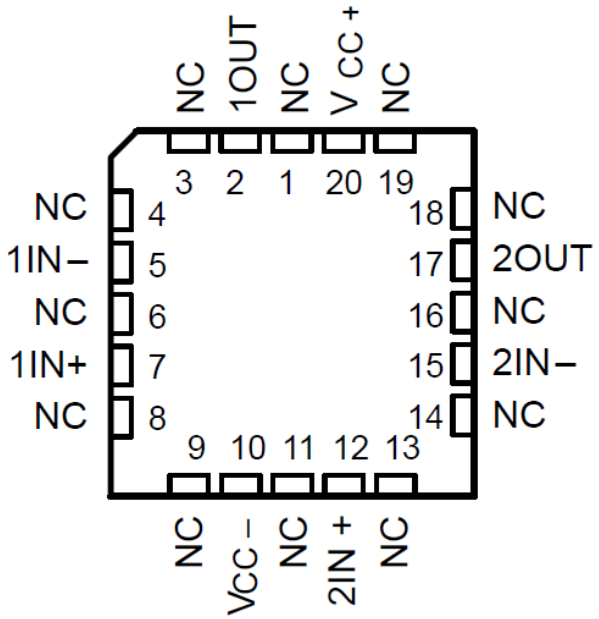

Figure 4-6. TLE2062M, TLE2062AM, and TLE2062BM FK Package (Top View)

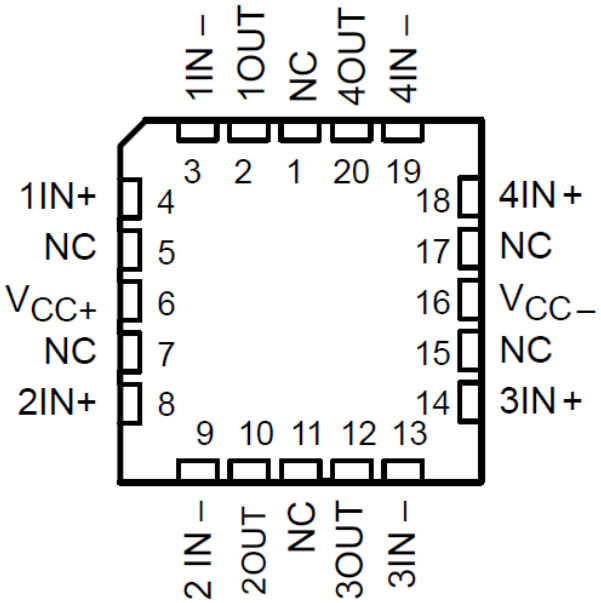

Figure 4-7. TLE2064M, TLE2064AM, and TLE2064BM FK Package (Top View)

5 Specifications

5.1 Absolute Maximum Ratings

over operating free-air temperature range (unless otherwise noted)[1]

			MIN	MAX	UNIT
V_{CC+} −(V_{CC-})	Supply voltage[2]		0	38	V
V_{ID}	Differential input voltage range[3]			V_{CC} +0.2V	V
V_I	Input voltage range (any input)		V_{CC-}	V_{CC+}	
I_I	Input current		-1	1	mA
	Duration of short-circuit current at (or below) 25°C[4]			Continous	
T_A	Operating free-air temperature range	C suffix	0	70	°C
		I suffix	–40	85	
		M suffix	–55	125	
T_{stg}	Storage temperature		-65	150	°C
	Case temperature for 60 seconds	FK package		260	°C
	Lead temperature 1,6mm (1/16 inch) from case for 10 seconds			260	°C
	Lead temperature 1,6mm (1/16 inch) from case for 60 seconds	JG package		300	°C
		U			
		W			

(1) Stresses beyond those listed under *Absolute Maximum Ratings* can cause permanent damage to the device. These are stress ratings only and functional operation of the device at these or any other conditions beyond those indicated under *Recommended Operating Conditions* is not implied. Exposure to absolute-maximum-rated conditions for extended periods can affect device reliability.
(2) All voltage values are with respect to network ground terminal GND.
(3) Differential voltages are at IN+ with respect to IN –.
(4) Short-circuit to ground, one amplifier per package. Extended short-circuit current, especially with higher supply voltage, can cause excessive heating and eventual destruction.

Copyright © 2026 Texas Instruments Incorporated

5.2 Recommended Operating Conditions

			C SUFFIX		I SUFFIX		M SUFFIX		UNIT
			MIN	MAX	MIN	MAX	MIN	MAX	
$V_{CC\pm}$	Supply voltage		±3.5	±18	±3.5	±18	±3.5	±18	V
V_{IC}	Common-mode input voltage,	$V_{CC\pm}$ = ± 5V	–1.6	4	–1.6	4	–1.6	4	V
		$V_{CC\pm}$ = ±15V	–11	13	–11	13	–11	13	
T_A	Operating free-air temperature		0	70	–40	85	–55	125	°C

5.3 TLE2061C Electrical Characteristics

at specified free-air temperature, $V_{CC\pm}$ = ± 5V (unless otherwise noted)

PARAMETER			TEST CONDITIONS	T_A (1)	TLE2061C TLE2061AC TLE2061BC			UNIT
					MIN	TYP	MAX	
V_{IO}	Input offset voltage	TLE2061C	V_{IC} = 0, R_S = 50Ω	25°C		0.1	3.1	mV
				Full range			4	
		TLE2061AC		25°C		0.1	2.6	
				Full range			3.5	
		TLE2061BC		25°C		0.1	1.9	
				Full range			2.4	
a_{VIO}	Temperature coefficient of input offset voltage			Full range		1		μV/°C
I_{IO}	Input offset current			25°C		±5		pA
				Full range			0.8	nA
I_{IB}	Input bias current			25°C		±10		pA
				Full range			2	nA
V_{ICR}	Common-mode input voltage range			25°C	-1.6 to 4	-2 to 6		V
				Full range	-1.6 to 4			V
V_{OM+}	Maximum positive peak output voltage swing		R_L = 10kΩ	25°C	3.5	4.9		V
				Full range	3.3			
			R_L = 100kΩ	25°C	2.5	4.5		V
				Full range	2			
$V_{OM–}$	Maximum negative peak output voltage swing		R_L = 10kΩ	25°C	–3.7	–4.9		V
				Full range	–3.3			
			R_L = 100kΩ	25°C	–2.5	–4.5		V
				Full range	–2			
A_{VD}	Large-signal differential voltage amplification		V_O = ±2.8V R_L = 10Ω	25°C	15	225		V/mV
				Full range	2			
			V_O = 0 to 2V R_L = 100Ω	25°C	0.75	225		
				Full range	0.5			
			V_O = 0 to -2V R_L = 100Ω	25°C	0.5	225		
				Full range	0.25			
Z_{ID}	Differential					540 || 3		GΩ || pF
Z_{ICM}	Common-mode					6 || 1		TΩ || pF
z_o	Open-loop output impedance		I_O = 0	25°C		575		Ω

5.3 TLE2061C Electrical Characteristics (continued)

at specified free-air temperature, $V_{CC\pm}$ = ± 5V (unless otherwise noted)

PARAMETER		TEST CONDITIONS		T_A (1)	TLE2061C TLE2061AC TLE2061BC			UNIT
					MIN	TYP	MAX	
CMRR	Common-mode rejection ratio	V_{IC} = V_{ICRmin},	R_S = 50Ω	25°C	65	82		dB
				Full range	65			
k_{SVR}	Supply-voltage rejection ratio ($\Delta V_{CC\pm}/\Delta V_{IO}$)	$V_{CC\pm}$ = ± 5V to ± 15V,		25°C	75	135		dB
		R_S = 50Ω		Full range	75			
I_{CC}	Supply current	V_O = 0,	No load	25°C		120	325	μA
				Full range			350	

(1) Full range is 0°C to 70°C.

5.4 TLE2061C Operating Characteristics

at specified free-air temperature, $V_{CC\pm}$ =± 5V

PARAMETER		TEST CONDITIONS		T_A (1)	TLE2061C TLE2061AC TLE2061BC			UNIT
					MIN	TYP	MAX	
SR	Slew rate at unity gain (See Figure 6-1)	RL = 10kΩ,	CL = 100pF	25°C	2.2	4		V/μs
				Full range	2.1			
V_n	Equivalent input noise voltage (See Figure 6-2)	f = 10Hz,	RS = 20Ω	25°C		59		nV/√Hz
		f = 1kHz,	RS = 20Ω			43		
$V_{N(PP)}$	Peak-to-peak equivalent input noise voltage	f = 0.1Hz to 10Hz		25°C		1.1		μV
In	Equivalent input noise current	f = 1kHz		25°C		1		fA/√Hz
THD	Total harmonic distortion	AVD = 2, VO(PP) = 2V,	f = 10kHz, RL = 10kΩ	25°C		0.025%		
ts	Settling time	0.1%		25°C		5		μs
		0.01%				10		
BOM	Maximum output-swing bandwidth	AVD = 1,	RL = 10kΩ	25°C		140		kHz
φm	Phase margin at unity gain (See Figure 6-3)	RL = 10kΩ,	CL = 100pF	25°C		46°		

(1) Full range is 0°C to 70°C.

Copyright © 2026 Texas Instruments Incorporated

5.5 TLE2061C Electrical Characteristics

at specified free-air temperature, $V_{CC\pm}$ = ± 15V (unless otherwise noted)

PARAMETER			TEST CONDITIONS		T_A (1)	TLE2061C TLE2061AC TLE2061BC			UNIT
						MIN	TYP	MAX	
V_{IO}	Input offset voltage	TLE2061C	V_{IC} = 0,	R_S = 50Ω	25°C		0.1	3	mV
					Full range			3.9	
		TLE2061AC			25°C		0.1	1.5	
					Full range			2.5	
		TLE2061BC			25°C		0.1	0.5	
					Full range			1	
a_{VIO}	Temperature coefficient of input offset voltage				Full range		1		μV/°C
I_{IO}	Input offset current				25°C		±5		pA
					Full range			1	nA
I_{IB}	Input bias current				25°C		±10		pA
					Full range			3	nA
V_{ICR}	Common-mode input voltage range				25°C	-11 to 13	-12 to 16		V
					Full range	-11 to 13			V
V_{OM+}	Maximum positive peak output voltage swing		R_L = 10kΩ		25°C	13.2	14.9		V
					Full range	13			
			R_L = 600Ω		25°C	12.5	14.5		V
					Full range	12			
V_{OM-}	Maximum negative peak output voltage swing		R_L = 10kΩ		25°C	–13.7	–14.9		V
					Full range	–13			
			R_L = 600kΩ		25°C	–12.5	–14.5		V
					Full range	–12			
A_{VD}	Large-signal differential voltage amplification		V_O = ±10 V	R_L = 10kΩ	25°C	30	225		V/mV
					Full range	20			
			V_O = 0 to 8V	R_L = 600Ω	25°C	25	225		
					Full range	10			
			V_O = 0 to -8V	R_L = 600Ω	25°C	3	225		
					Full range	1			
Z_{ID}	Differential						540 || 3		GΩ || pF
Z_{ICM}	Common-mode						6 || 1		TΩ || pF
z_o	Open-loop output impedance		I_O = 0		25°C		575		Ω
CMRR	Common-mode rejection ratio		V_{IC} = V_{ICRmin},	R_S = 50Ω	25°C	72	90		dB
					Full range	70			
k_{SVR}	Supply-voltage rejection ratio ($\Delta V_{CC\pm}/\Delta V_{IO}$)		$V_{CC\pm}$ = ± 5V to ± 15V,		25°C	75	93		dB
			R_S = 50Ω		Full range	75			
I_{CC}	Supply current		V_O = 0,	No load	25°C		125	350	μA
					Full range			375	

(1) Full range is 0°C to 70°C.

5.6 TLE2061C Operating Characteristics

at specified free-air temperature, $V_{CC\pm}$ =± 15V

PARAMETER		TEST CONDITIONS		T_A (1)	TLE2061C TLE2061AC TLE2061BC			UNIT
					MIN	TYP	MAX	
SR	Slew rate at unity gain (See Figure 6-1)	RL = 10kΩ,	CL = 100pF	25°C	2.6	4		V/µs
				Full range	2.5			
V_n	Equivalent input noise voltage (See Figure 6-2)	f = 10Hz,	RS = 20Ω	25°C		70		nV/√Hz
		f = 1kHz,	RS = 20Ω			40		
$V_{N(PP)}$	Peak-to-peak equivalent input noise voltage	f = 0.1Hz to 10Hz		25°C		1.1		µV
In	Equivalent input noise current	f = 1kHz		25°C		1.1		fA/√Hz
THD	Total harmonic distortion	AVD = 2, VO(PP) = 2V,	f = 10kHz, RL = 10kΩ	25°C		0.025%		
ts	Settling time	0.1%		25°C		5		µs
		0.01%				10		
BOM	Maximum output-swing bandwidth	AVD = 1,	RL = 10kΩ	25°C		40		kHz
φm	Phase margin at unity gain (See Figure 6-3)	RL = 10kΩ,	CL = 100pF	25°C		46°		

(1) Full range is 0°C to 70°C.

5.7 TLE2061I Electrical Characteristics

at specified free-air temperature, $V_{CC\pm}$ = ± 5V (unless otherwise noted)

PARAMETER			TEST CONDITIONS		T_A (1)	TLE2061I TLE2061AI TLE2061BI			UNIT
						MIN	TYP	MAX	
V_{IO}	Input offset voltage	TLE2061I	V_{IC} = 0,	R_S = 50Ω	25°C		0.1	3.1	mV
					Full range			4.4	
		TLE2061AI			25°C		0.1	2.6	
					Full range			3.9	
		TLE2061BI			25°C		0.1	1.9	
					Full range			2.7	
a_{VIO}	Temperature coefficient of input offset voltage				Full range		1		µV/°C
I_{IO}	Input offset current				25°C		±5		pA
					Full range			2	nA
I_{IB}	Input bias current				25°C		±10		pA
					Full range			4	nA
V_{ICR}	Common-mode input voltage range				25°C	-1.6 to 4	-2 to 6		V
					Full range	-1.6 to 4			V
V_{OM+}	Maximum positive peak output voltage swing		R_L = 10kΩ		25°C	3.5	4.9		V
					Full range	3.1			
			R_L = 100kΩ		25°C	2.5	4.5		V
					Full range	2			

Copyright © 2026 Texas Instruments Incorporated

5.7 TLE2061I Electrical Characteristics (continued)

at specified free-air temperature, $V_{CC\pm}$ = ± 5V (unless otherwise noted)

PARAMETER		TEST CONDITIONS		T_A (1)	TLE2061I TLE2061AI TLE2061BI			UNIT
					MIN	TYP	MAX	
V_{OM-}	Maximum negative peak output voltage swing	R_L = 10kΩ		25°C	–3.7	–4.9		V
				Full range	–3.1			
		R_L = 100kΩ		25°C	–2.5	–4.5		V
				Full range	–2			
A_{VD}	Large-signal differential voltage amplification	V_O = ±2.8V	R_L = 10Ω	25°C	15	225		V/mV
				Full range	2			
		V_O = 0 to 2V	R_L = 100Ω	25°C	0.75	225		
				Full range	0.5			
		V_O = 0 to -2V	R_L = 100Ω	25°C	0.5	225		
				Full range	0.25			
Z_{ID}	Differential					540 || 3		GΩ || pF
Z_{ICM}	Common-mode					6 || 1		TΩ || pF
z_o	Open-loop output impedance	I_O = 0		25°C		575		Ω
CMRR	Common-mode rejection ratio	V_{IC} = V_{ICRmin},	R_S = 50Ω	25°C	65	82		dB
				Full range	65			
k_{SVR}	Supply-voltage rejection ratio ($\Delta V_{CC\pm}/\Delta V_{IO}$)	$V_{CC\pm}$ = ± 5V to ± 15V,		25°C	75	135		dB
		R_S = 50Ω		Full range	65			
I_{CC}	Supply current	V_O = 0,	No load	25°C		120	325	μA
				Full range			350	

(1) Full range is -40°C to 85°C.

5.8 TLE2061I Operating Characteristics

at specified free-air temperature, $V_{CC\pm}$ =± 5V

PARAMETER		TEST CONDITIONS		T_A (1)	TLE2061I TLE2061AI TLE2061BI			UNIT
					MIN	TYP	MAX	
SR	Slew rate at unity gain (See Figure 6-1)	RL = 10kΩ,	CL = 100pF	25°C	2.2	4		V/μs
				Full range	1.7			
V_n	Equivalent input noise voltage (See Figure 6-2)	f = 10Hz,	RS = 20Ω	25°C		59		nV/√Hz
		f = 1kHz,	RS = 20Ω			43		
$V_{N(PP)}$	Peak-to-peak equivalent input noise voltage	f = 0.1Hz to 10Hz		25°C		1.1		μV
In	Equivalent input noise current	f = 1kHz		25°C		1		fA/√Hz
THD	Total harmonic distortion	AVD = 2, VO(PP) = 2V,	f = 10kHz, RL = 10kΩ	25°C		0.025%		
ts	Settling time	0.1%		25°C		5		μs
		0.01%				10		
BOM	Maximum output-swing bandwidth	AVD = 1,	RL = 10kΩ	25°C		140		kHz

at specified free-air temperature, $V_{CC\pm}$ =± 5V

PARAMETER		TEST CONDITIONS		T_A (1)	TLE2061I TLE2061AI TLE2061BI			UNIT
					MIN	TYP	MAX	
φm	Phase margin at unity gain (See Figure 6-3)	RL = 10kΩ,	CL = 100pF	25°C		46°		

(1) Full range is -40°C to 85°C.

5.9 TLE2061I Electrical Characteristics

at specified free-air temperature, $V_{CC\pm}$ = ± 15V (unless otherwise noted)

PARAMETER			TEST CONDITIONS		T_A (1)	TLE2061I TLE2061AI TLE2061BI			UNIT
						MIN	TYP	MAX	
V_{IO}	Input offset voltage	TLE2061I	V_{IC} = 0,	R_S = 50Ω	25°C		0.1	3	mV
					Full range			4.3	
		TLE2061AI			25°C		0.1	1.5	
					Full range			2.9	
		TLE2061BI			25°C		0.1	0.5	
					Full range			1.3	
a_{VIO}	Temperature coefficient of input offset voltage				Full range		1		μV/°C
I_{IO}	Input offset current				25°C		±5		pA
					Full range			3	nA
I_{IB}	Input bias current				25°C		±10		pA
					Full range			5	nA
V_{ICR}	Common-mode input voltage range				25°C	-11 to 13	-12 to 16		V
					Full range	-11 to 13			V
V_{OM+}	Maximum positive peak output voltage swing		R_L = 10kΩ		25°C	13.2	14.9		V
					Full range	13			
			R_L = 600Ω		25°C	12.5	14.5		V
					Full range	12			
V_{OM-}	Maximum negative peak output voltage swing		R_L = 10kΩ		25°C	–13.2	–14.9		V
					Full range	–13			
			R_L = 600kΩ		25°C	–12.5	–14.5		V
					Full range	–12			
A_{VD}	Large-signal differential voltage amplification		V_O = ±10V	R_L = 10kΩ	25°C	30	225		V/mV
					Full range	20			
			V_O = 0 to 8V	R_L = 600Ω	25°C	25	225		
					Full range	10			
			V_O = 0 to -8V	R_L = 600Ω	25°C	3	225		
					Full range	01			
Z_{ID}	Differential						540 || 3		GΩ || pF
Z_{ICM}	Common-mode						6 || 1		TΩ || pF
z_o	Open-loop output impedance		I_O = 0		25°C		575		Ω

Copyright © 2026 Texas Instruments Incorporated

5.9 TLE2061I Electrical Characteristics (continued)

at specified free-air temperature, $V_{CC\pm}$ = ± 15V (unless otherwise noted)

PARAMETER		TEST CONDITIONS		T_A (1)	TLE2061I TLE2061AI TLE2061BI			UNIT
					MIN	TYP	MAX	
CMRR	Common-mode rejection ratio	V_{IC} = V_{ICRmin},	R_S = 50Ω	25°C	72	90		dB
				Full range	65			
k_{SVR}	Supply-voltage rejection ratio ($\Delta V_{CC\pm}/\Delta V_{IO}$)	$V_{CC\pm}$ = ± 5V to ± 15V,		25°C	75	93		dB
		R_S = 50Ω		Full range	65			
I_{CC}	Supply current	V_O = 0,	No load	25°C		125	350	µA
				Full range			375	

(1) Full range is -40°C to 85°C.

5.10 TLE2061I Operating Characteristics

at specified free-air temperature, $V_{CC\pm}$ =± 15V

PARAMETER		TEST CONDITIONS		T_A (1)	TLE2061I TLE2061AI TLE2061BI			UNIT
					MIN	TYP	MAX	
SR	Slew rate at unity gain (See Figure 6-1)	RL = 10kΩ,	CL = 100pF	25°C	2.6	4		V/µs
				Full range	2.1			
V_n	Equivalent input noise voltage (See Figure 6-2)	f = 10Hz,	RS = 20Ω	25°C		70		nV/√Hz
		f = 1kHz,	RS = 20Ω			40		
$V_{N(PP)}$	Peak-to-peak equivalent input noise voltage	f = 0.1Hz to 10Hz		25°C		1.1		µV
In	Equivalent input noise current	f = 1kHz		25°C		1.1		fA/√Hz
THD	Total harmonic distortion	AVD = 2, VO(PP) = 2V,	f = 10kHz, RL = 10kΩ	25°C		0.025%		
ts	Settling time	0.1%		25°C		5		µs
		0.01%				10		
BOM	Maximum output-swing bandwidth	AVD = 1,	RL = 10kΩ	25°C		40		kHz
φm	Phase margin at unity gain (See Figure 6-3)	RL = 10kΩ,	CL = 100pF	25°C		46°		

(1) Full range is -40°C to 85°C.

5.11 TLE2061M Electrical Characteristics

at specified free-air temperature, $V_{CC\pm}$ = ± 5V (unless otherwise noted)

PARAMETER			TEST CONDITIONS	T_A [1]	TLE2061M TLE2061AM TLE2061BM MIN	TYP	MAX	UNIT
V_{IO}	Input offset voltage	TLE2061M	V_{IC} = 0, R_S = 50Ω	25°C		0.1	3.1	mV
				Full range			6	
		TLE2061AM		25°C		0.1	2.6	
				Full range			4.6	
		TLE2061BM		25°C		0.1	1.9	
				Full range			3.1	
a_{VIO}	Temperature coefficient of input offset voltage			Full range		1		μV/°C
	Input offset voltage long-term drift[2]			25°C		0.04		μ V/mo
I_{IO}	Input offset current			25°C		1		pA
				Full range			15	nA
I_{IB}	Input bias current			25°C		3		pA
				Full range			30	nA
V_{ICR}	Common-mode input voltage range			25°C	-1.6 to 4	-2 to 6		V
				Full range	-1.6 to 4			V
V_{OM+}	Maximum positive peak output voltage swing		R_L = 10kΩ	25°C	3.5	4.9		V
				Full range	3			
			R_L = 600kΩ	25°C	2.5	4.5		
				Full range	2			
			R_L = 100kΩ	25°C	2.5	4.5		V
				Full range	2			
V_{OM-}	Maximum negative peak output voltage swing		R_L = 10kΩ	25°C	-3.5	-4.9		V
				Full range	-3			
		FK and JG packages	R_L = 600Ω	25°C	-2.5	-4.5		
				Full range	2			
		D and P packages	R_L = 100Ω	25°C	–2.5	–4.5		V
				Full range	–2			
A_{VD}	Large-signal differential voltage amplification		V_O = ±2.8V R_L = 10kΩ	25°C	15	225		V/mV
				Full range	2			
		FK and JG packages	V_O = 0 to 2.5V R_L = 600Ω	25°C	1	225		
				Full range	0.5			
			V_O = 0 to -2.5V R_L = 600Ω	25°C	1	225		
				Full range	0.5			
		D and P packages	V_O = 0 to 2V R_L = 100Ω	25°C	0.75	225		
				Full range	0.5			
			V_O = 0 to -2V R_L = 100Ω	25°C	0.5	225		
				Full range	0.25			
r_i	Input resistance			25°C		10^{12}		Ω
c_i	Input capacitance			25°C		4		pF
z_o	Open-loop output impedance		I_O = 0	25°C		280		Ω

Copyright © 2026 Texas Instruments Incorporated

5.11 TLE2061M Electrical Characteristics (continued)

at specified free-air temperature, $V_{CC\pm}$ = ± 5V (unless otherwise noted)

PARAMETER		TEST CONDITIONS		T_A (1)	TLE2061M TLE2061AM TLE2061BM			UNIT
					MIN	TYP	MAX	
CMRR	Common-mode rejection ratio	V_{IC} = V_{ICRmin},	R_S = 50Ω	25°C	65	82		dB
				Full range	65			
k_{SVR}	Supply-voltage rejection ratio ($\Delta V_{CC\pm}/\Delta V_{IO}$)	$V_{CC\pm}$ = ± 5V to ± 15V,		25°C	75	135		dB
		R_S = 50Ω		Full range	65			
I_{CC}	Supply current	V_O = 0,	No load	25°C		120	325	µA
				Full range			350	

(1) Full range is -55°C to 125°C.
(2) Typical values are based on the input offset voltage shift observed through 168 hours of operating life test at T_A = 150°C extrapolated to T_A = 25°C using the Arrhenius equation and assuming an activation energy of 0.96 eV

5.12 TLE2061M Operating Characteristics

at specified free-air temperature, $V_{CC\pm}$ =± 5V, T_A = 25°C

PARAMETER		TEST CONDITIONS		TLE2061M TLE2061AM TLE2061BM			UNIT
				MIN	TYP	MAX	
SR	Slew rate at unity gain (See Figure 6-1)	RL = 10kΩ,	CL = 100pF		4		V/µs
V_n	Equivalent input noise voltage (See Figure 6-2)	f = 10Hz,	RS = 20Ω		59		nV/√Hz
		f = 1kHz,	RS = 20Ω		43		
$V_{N(PP)}$	Peak-to-peak equivalent input noise voltage	f = 0.1Hz to 10Hz			1.1		µV
In	Equivalent input noise current	f = 1kHz			1		fA/√Hz
THD	Total harmonic distortion	AVD = 2, VO(PP) = 2V,	f = 10kHz, RL = 10kΩ		0.025%		
B1	Unity-gain bandwidth (See Figure 6-3)	RL = 10kΩ,	CL = 100pF		1.8		MHz
		RL = 100Ω, 0.1%	CL = 100pF		1.3		
ts	Settling time	0.1%			5		µs
		0.01%			10		
BOM	Maximum output-swing bandwidth	AVD = 1,	RL = 10kΩ		140		kHz
φm	Phase margin at unity gain (See Figure 6-3)	RL = 10kΩ,	CL = 100pF		58°		
		RL = 100Ω,	CL = 100pF		75°		

Copyright © 2026 Texas Instruments Incorporated

5.13 TLE2061M Electrical Characteristics

at specified free-air temperature, $V_{CC\pm}$ = ± 15V (unless otherwise noted)

PARAMETER			TEST CONDITIONS	T_A (1)	TLE2061M TLE2061AM TLE2061BM MIN	TYP	MAX	UNIT
V_{IO}	Input offset voltage	TLE2061M	V_{IC} = 0, R_S = 50Ω	25°C		0.1	3	mV
				Full range			6	
		TLE2061AM		25°C		0.1	1.5	
				Full range			3.6	
		TLE2061BM		25°C		0.1	0.5	
				Full range			1.7	
a_{VIO}	Temperature coefficient of input offset voltage			Full range		1		μV/°C
	Input offset voltage long-term drift(2)			25°C		0.04		μV/mo
I_{IO}	Input offset current			25°C		2		pA
				Full range			20	nA
I_{IB}	Input bias current			25°C		4		pA
				Full range			40	nA
V_{ICR}	Common-mode input voltage range			25°C	-11 to 13	-12 to 16		V
				Full range	-11 to 13			V
V_{OM+}	Maximum positive peak output voltage swing		R_L = 10kΩ	25°C	13	14.9		V
				Full range	12.5			
			R_L = 600Ω	25°C	12.5	14.5		V
				Full range	12			
V_{OM-}	Maximum negative peak output voltage swing		R_L = 10kΩ	25°C	–13	–14.9		V
				Full range	–12.5			
			R_L = 600kΩ	25°C	–12.5	–14.5		V
				Full range	–12			
A_{VD}	Large-signal differential voltage amplification		V_O = ±10V R_L = 10kΩ	25°C	30	225		V/mV
				Full range	20			
			V_O = 0 to 8V R_L = 600Ω	25°C	25	225		
				Full range	7			
			V_O = 0 to -8V R_L = 600Ω	25°C	3	225		
				Full range	1			
r_i	Input resistance			25°C		10^{12}		Ω
c_i	Input capacitance			25°C		4		pF
z_o	Open-loop output impedance		I_O = 0	25°C		280		Ω
CMRR	Common-mode rejection ratio		V_{IC} = V_{ICRmin}, R_S = 50Ω	25°C	72	90		dB
				Full range	65			
k_{SVR}	Supply-voltage rejection ratio ($\Delta V_{CC\pm}/\Delta V_{IO}$)		$V_{CC\pm}$ = ± 5V to ± 15V, R_S = 50Ω	25°C	75	93		dB
				Full range	65			
I_{CC}	Supply current		V_O = 0, No load	25°C		125	350	μA
				Full range			375	

(1) Full range is -55°C to 125°C.
(2) Typical values are based on the input offset voltage shift observed through 168 hours of operating life test at T_A = 150°C extrapolated to T_A = 25°C using the Arrhenius equation and assuming an activation energy of 0.96 eV

Copyright © 2026 Texas Instruments Incorporated

5.14 TLE2061M Operating Characteristics

at specified free-air temperature, $V_{CC\pm}$ =± 15V

PARAMETER		TEST CONDITIONS		T_A (1)	TLE2061M TLE2061AM TLE2061BM			UNIT
					MIN	TYP	MAX	
SR	Slew rate at unity gain (See Figure 6-1)	RL = 10kΩ,	CL = 100pF	25°C	2.6	4		V/µs
				Full range	1.8			
V_n	Equivalent input noise voltage (See Figure 6-2)	f = 10Hz,	RS = 20Ω	25°C		70		nV/√Hz
		f = 1kHz,	RS = 20Ω			40		
$V_{N(PP)}$	Peak-to-peak equivalent input noise voltage	f = 0.1Hz to 10Hz		25°C		1.1		µV
In	Equivalent input noise current	f = 1kHz		25°C		1.1		fA/√Hz
THD	Total harmonic distortion	AVD = 2, VO(PP) = 2V,	f = 10kHz, RL = 10kΩ	25°C		0.025%		
B1	Unity-gain bandwidth (See Figure 6-3)	RL = 10kΩ,	CL = 100pF	25°C		2		MHz
		RL = 600Ω	CL = 100pF			1.5		
ts	Settling time	0.1%		25°C		5		µs
		0.01%				10		
BOM	Maximum output-swing bandwidth	AVD = 1,	RL = 10kΩ	25°C		40		kHz
φm	Phase margin at unity gain (See Figure 6-3)	RL = 10kΩ,	CL = 100pF	25°C		60°		
		RL = 600Ω,	CL = 100pF			70°		

(1) Full range is -55°C to 125°C.

5.15 TLE2062C Electrical Characteristics

at specified free-air temperature, $V_{CC\pm}$ = ± 5V (unless otherwise noted)

PARAMETER			TEST CONDITIONS		T_A (1)	TLE2062C TLE2062AC TLE2062BC			UNIT
						MIN	TYP	MAX	
V_{IO}	Input offset voltage	TLE2062C	V_{IC} = 0,	R_S = 50Ω	25°C		0.1	5	mV
					Full range			5.9	
		TLE2062AC			25°C		0.1	4	
					Full range			4.9	
		TLE2062BC			25°C		0.1	3	
					Full range			3.9	
a_{VIO}	Temperature coefficient of input offset voltage				Full range		1		µV/°C
I_{IO}	Input offset current				25°C		±5		pA
					Full range			0.8	nA
I_{IB}	Input bias current				25°C		±10		pA
					Full range			2	nA
V_{ICR}	Common-mode input voltage range				25°C	-1.6 to 4	-2 to 6		V
					Full range	-1.6 to 4			V

5.15 TLE2062C Electrical Characteristics (continued)

at specified free-air temperature, $V_{CC\pm}$ = ± 5V (unless otherwise noted)

PARAMETER		TEST CONDITIONS		T_A (1)	TLE2062C TLE2062AC TLE2062BC			UNIT
					MIN	TYP	MAX	
V_{OM+}	Maximum positive peak output voltage swing	R_L = 10kΩ		25°C	3.5	4.9		V
				Full range	3.3			
		R_L = 100kΩ		25°C	2.5	4.5		V
				Full range	2			
V_{OM-}	Maximum negative peak output voltage swing	R_L = 10kΩ		25°C	–3.7	–4.9		V
				Full range	–3.3			
		R_L = 100kΩ		25°C	–2.5	–4.5		V
				Full range	–2			
A_{VD}	Large-signal differential voltage amplification	V_O = ±2.8V	R_L = 10Ω	25°C	15	225		V/mV
				Full range	2			
		V_O = 0 to 2V	R_L = 100Ω	25°C	0.75	225		
				Full range	0.5			
		V_O = 0 to -2V	R_L = 100Ω	25°C	0.5	225		
				Full range	0.25			
Z_{ID}	Differential					540 || 3		GΩ || pF
Z_{ICM}	Common-mode					6 || 1		TΩ || pF
z_o	Open-loop output impedance	I_O = 0		25°C		575		Ω
CMRR	Common-mode rejection ratio	V_{IC} = V_{ICRmin},	R_S = 50Ω	25°C	65	82		dB
				Full range	65			
k_{SVR}	Supply-voltage rejection ratio ($\Delta V_{CC\pm}/\Delta V_{IO}$)	$V_{CC\pm}$ = ± 5V to ± 15V,		25°C	75	135		dB
		R_S = 50Ω		Full range	75			
I_{CC}	Supply current	V_O = 0,	No load	25°C		120	620	μA
				Full range			635	

(1) Full range is 0°C to 70°C.

5.16 TLE2062C Operating Characteristics

at specified free-air temperature, $V_{CC\pm}$ =± 5V

PARAMETER		TEST CONDITIONS		TA(1)	TLE2062C TLE20612C TLE20612C			UNIT
					MIN	TYP	MAX	
SR	Slew rate at unity gain (See Figure 6-1)	RL = 10kΩ,	CL = 100pF	25°C	2.2	4		V/μs
				Full range	2.1			
V_n	Equivalent input noise voltage (See Figure 6-2)	f = 10Hz,	RS = 20Ω	25°C		59		nV/√Hz
		f = 1kHz,	RS = 20Ω			43		
$V_{N(PP)}$	Peak-to-peak equivalent input noise voltage	f = 0.1Hz to 10Hz		25°C		1.1		μV
In	Equivalent input noise current	f = 1kHz		25°C		1		fA/√Hz
THD	Total harmonic distortion	AVD = 2, VO(PP) = 2V,	f = 10kHz, RL = 10kΩ	25°C		0.025%		

Copyright © 2026 Texas Instruments Incorporated

at specified free-air temperature, $V_{CC\pm}$ =± 5V

PARAMETER		TEST CONDITIONS		TA[1]	TLE2062C TLE20612C TLE20612C			UNIT
					MIN	TYP	MAX	
ts	Settling time	0.1%		25°C		5		µs
		0.01%				10		
BOM	Maximum output-swing bandwidth	AVD = 1,	RL = 10kΩ	25°C		140		kHz
φm	Phase margin at unity gain (See Figure 6-3)	RL = 10kΩ,	CL = 100pF	25°C		46°		

(1) Full range is 0°C to 70°C.

5.17 TLE2062C Electrical Characteristics

at specified free-air temperature, $V_{CC\pm}$ = ± 15V (unless otherwise noted)

PARAMETER			TEST CONDITIONS		T_A [1]	TLE2062C TLE2062AC TLE2062BC			UNIT
						MIN	TYP	MAX	
V_{IO}	Input offset voltage	TLE2062C	V_{IC} = 0,	R_S = 50Ω	25°C		0.1	4	mV
					Full range			4.9	
		TLE2062AC			25°C		0.1	2	
					Full range			2.9	
		TLE2062BC			25°C		0.1	1	
					Full range			1.9	
a_{VIO}	Temperature coefficient of input offset voltage				Full range		1		µV/°C
I_{IO}	Input offset current				25°C		±5		pA
					Full range			1	nA
I_{IB}	Input bias current				25°C		±10		pA
					Full range			3	nA
V_{ICR}	Common-mode input voltage range				25°C	-11 to 13	-12 to 16		V
					Full range	-11 to 13			V
V_{OM+}	Maximum positive peak output voltage swing		R_L = 10kΩ		25°C	13.2	14.9		V
					Full range	13			
			R_L = 600Ω		25°C	12.5	14.5		V
					Full range	12			
V_{OM-}	Maximum negative peak output voltage swing		R_L = 10kΩ		25°C	–13.7	–14.9		V
					Full range	–13			
			R_L = 600kΩ		25°C	–12.5	–14.5		V
					Full range	–12			
A_{VD}	Large-signal differential voltage amplification		V_O = ±10V	R_L = 10kΩ	25°C	30	225		V/mV
					Full range	20			
			V_O = 0 to 8V	R_L = 600Ω	25°C	25	225		
					Full range	10			
			V_O = 0 to -8V	R_L = 600Ω	25°C	3	225		
					Full range	1			

5.17 TLE2062C Electrical Characteristics (continued)

at specified free-air temperature, $V_{CC\pm}$ = ± 15V (unless otherwise noted)

PARAMETER		TEST CONDITIONS		T_A (1)	TLE2062C TLE2062AC TLE2062BC			UNIT
					MIN	TYP	MAX	
Z_{ID}	Differential					540 || 3		GΩ || pF
Z_{ICM}	Common-mode					6 || 1		TΩ || pF
z_o	Open-loop output impedance	I_O = 0		25°C		575		Ω
CMRR	Common-mode rejection ratio	$V_{IC} = V_{ICRmin}$,	R_S = 50Ω	25°C	72	90		dB
				Full range	70			
k_{SVR}	Supply-voltage rejection ratio ($\Delta V_{CC\pm}/\Delta V_{IO}$)	$V_{CC\pm}$ = ± 5V to ± 15V,		25°C	75	93		dB
		R_S = 50Ω		Full range	75			
I_{CC}	Supply current	V_O = 0,	No load	25°C		275	690	μA
				Full range			715	

(1) Full range is 0°C to 70°C.

5.18 TLE2062C Operating Characteristics

at specified free-air temperature, $V_{CC\pm}$ =± 15V

PARAMETER		TEST CONDITIONS		TA(1)	TLE2062C TLE2062AC TLE2062BC			UNIT
					MIN	TYP	MAX	
SR	Slew rate at unity gain (See Figure 6-1)	RL = 10kΩ,	CL = 100pF	25°C	2.6	4		V/μs
				Full range	2.5			
V_n	Equivalent input noise voltage (See Figure 6-2)	f = 10Hz,	RS = 20Ω	25°C		70		nV/√Hz
		f = 1kHz,	RS = 20Ω			40		
$V_{N(PP)}$	Peak-to-peak equivalent input noise voltage	f = 0.1Hz to 10Hz		25°C		1.1		μV
In	Equivalent input noise current	f = 1kHz		25°C		1.1		fA/√Hz
THD	Total harmonic distortion	AVD = 2, VO(PP) = 2V,	f = 10kHz, RL = 10kΩ	25°C		0.025%		
ts	Settling time	0.1%		25°C		5		μs
		0.01%				10		
BOM	Maximum output-swing bandwidth	AVD = 1,	RL = 10kΩ	25°C		40		kHz
φm	Phase margin at unity gain (See Figure 6-3)	RL = 10kΩ,	CL = 100pF	25°C		46°		

(1) Full range is 0°C to 70°C.

Copyright © 2026 Texas Instruments Incorporated

5.19 TLE2062I Electrical Characteristics

at specified free-air temperature, $V_{CC\pm}$ = ± 5V (unless otherwise noted)

PARAMETER			TEST CONDITIONS		T_A (1)	TLE2062I TLE2062AI TLE2062BI MIN	TYP	MAX	UNIT
V_{IO}	Input offset voltage	TLE2062I	V_{IC} = 0,	R_S = 50Ω	25°C		0.1	5	mV
					Full range			6.3	
		TLE2062AI			25°C		0.1	4	
					Full range			5.3	
		TLE2062BI			25°C		0.1	3	
					Full range			4.3	
a_{VIO}	Temperature coefficient of input offset voltage				Full range		1		μV/°C
I_{IO}	Input offset current				25°C		±5		pA
					Full range			2	nA
I_{IB}	Input bias current				25°C		±10		pA
					Full range			4	nA
V_{ICR}	Common-mode input voltage range				25°C	-1.6 to 4	-2 to 6		V
					Full range	-1.6 to 4			V
V_{OM+}	Maximum positive peak output voltage swing		R_L = 10kΩ		25°C	3.5	4.9		V
					Full range	3.1			
			R_L = 100kΩ		25°C	2.5	4.5		V
					Full range	2			
V_{OM-}	Maximum negative peak output voltage swing		R_L = 10kΩ		25°C	–3.7	–4.9		V
					Full range	–3.1			
			R_L = 100kΩ		25°C	–2.5	–4.5		V
					Full range	–2			
A_{VD}	Large-signal differential voltage amplification		V_O = ±2.8V	R_L = 10Ω	25°C	15	225		V/mV
					Full range	2			
			V_O = 0 to 2V	R_L = 100Ω	25°C	0.75	225		
					Full range	0.5			
			V_O = 0 to -2 V	R_L = 100Ω	25°C	0.5	225		
					Full range	0.25			
Z_{ID}	Differential						540 || 3		GΩ || pF
Z_{ICM}	Common-mode						6 || 1		TΩ || pF
z_o	Open-loop output impedance		I_O = 0		25°C		575		Ω
CMRR	Common-mode rejection ratio		V_{IC} = V_{ICRmin},	R_S = 50Ω	25°C	65	82		dB
					Full range	65			
k_{SVR}	Supply-voltage rejection ratio ($\Delta V_{CC\pm}/\Delta V_{IO}$)		$V_{CC\pm}$ = ± 5V to ± 15V,		25°C	75	135		dB
			R_S = 50Ω		Full range	65			
I_{CC}	Supply current		V_O = 0,	No load	25°C		120	620	μA
					Full range			640	

(1) Full range is -40°C to 85°C.

5.20 TLE2062I Operating Characteristics

at specified free-air temperature, $V_{CC\pm}$ =± 5V

PARAMETER		TEST CONDITIONS		TA[1]	TLE2062I TLE2062AI TLE2062BI			UNIT
					MIN	TYP	MAX	
SR	Slew rate at unity gain (See Figure 6-1)	RL = 10kΩ,	CL = 100pF	25°C	2.2	4		V/µs
				Full range	1.7			
V_n	Equivalent input noise voltage (See Figure 6-2)	f = 10Hz,	RS = 20Ω	25°C		59		nV/√Hz
		f = 1kHz,	RS = 20Ω			43		
$V_{N(PP)}$	Peak-to-peak equivalent input noise voltage	f = 0.1Hz to 10Hz		25°C		1.1		µV
In	Equivalent input noise current	f = 1kHz		25°C		1		fA/√Hz
THD	Total harmonic distortion	AVD = 2, VO(PP) = 2V,	f = 10kHz, RL = 10kΩ	25°C		0.025%		
ts	Settling time	0.1%		25°C		5		µs
		0.01%				10		
BOM	Maximum output-swing bandwidth	AVD = 1,	RL = 10kΩ	25°C		140		kHz
φm	Phase margin at unity gain (See Figure 6-3)	RL = 10kΩ,	CL = 100pF	25°C		46°		

(1) Full range is -40°C to 85°C.

5.21 TLE2062I Electrical Characteristics

at specified free-air temperature, $V_{CC\pm}$ = ± 15V (unless otherwise noted)

PARAMETER			TEST CONDITIONS		T_A [1]	TLE2062I TLE2062AI TLE2062BI			UNIT
						MIN	TYP	MAX	
V_{IO}	Input offset voltage	TLE2062I	V_{IC} = 0,	R_S = 50Ω	25°C		0.1	4	mV
					Full range			5.3	
		TLE2062AI			25°C		0.1	2	
					Full range			3.3	
		TLE2062BI			25°C		0.1	1	
					Full range			2.3	
a_{VIO}	Temperature coefficient of input offset voltage				Full range		1		µV/°C
I_{IO}	Input offset current				25°C		±5		pA
					Full range			3	nA
I_{IB}	Input bias current				25°C		±10		pA
					Full range			5	nA
V_{ICR}	Common-mode input voltage range				25°C	-11 to 13	-12 to 16		V
					Full range	-11 to 13			V
V_{OM+}	Maximum positive peak output voltage swing		R_L = 10kΩ		25°C	13.2	14.9		V
					Full range	13			
			R_L = 600Ω		25°C	12.5	14.5		V
					Full range	12			

Copyright © 2026 Texas Instruments Incorporated

5.21 TLE2062I Electrical Characteristics (continued)

at specified free-air temperature, $V_{CC\pm}$ = ± 15V (unless otherwise noted)

PARAMETER		TEST CONDITIONS		T_A (1)	TLE2062I TLE2062AI TLE2062BI MIN	TYP	MAX	UNIT
V_{OM-}	Maximum negative peak output voltage swing	R_L = 10kΩ		25°C	–13.2	–14.9		V
				Full range	–13			
		R_L = 600kΩ		25°C	–12.5	–14.5		V
				Full range	–12			
A_{VD}	Large-signal differential voltage amplification	V_O = ±10V	R_L = 10kΩ	25°C	30	225		V/mV
				Full range	20			
		V_O = 0 to 8V	R_L = 600Ω	25°C	25	225		
				Full range	10			
		V_O = 0 to -8V	R_L = 600Ω	25°C	3	225		
				Full range	1			
Z_{ID}	Differential					540 || 3		GΩ || pF
Z_{ICM}	Common-mode					6 || 1		TΩ || pF
z_o	Open-loop output impedance	I_O = 0		25°C		280		Ω
CMRR	Common-mode rejection ratio	V_{IC} = V_{ICRmin},	R_S = 50Ω	25°C	72	90		dB
				Full range	65			
k_{SVR}	Supply-voltage rejection ratio ($\Delta V_{CC\pm}/\Delta V_{IO}$)	$V_{CC\pm}$ = ± 5V to ± 15V,		25°C	75	93		dB
		R_S = 50Ω		Full range	65			
I_{CC}	Supply current	V_O = 0,	No load	25°C		275	690	μA
				Full range			720	

(1) Full range is -40°C to 85°C.

5.22 TLE2062I Operating Characteristics

at specified free-air temperature, $V_{CC\pm}$ =± 15V

PARAMETER		TEST CONDITIONS		TA(1)	TLE2062I TLE2062AI TLE2062BI MIN	TYP	MAX	UNIT
SR	Slew rate at unity gain (See Figure 6-1)	RL = 10kΩ,	CL = 100pF	25°C	2.6	4		V/μs
				Full range	2.1			
V_n	Equivalent input noise voltage (See Figure 6-2)	f = 10Hz,	RS = 20Ω	25°C		70		nV/√Hz
		f = 1kHz,	RS = 20Ω			40		
$V_{N(PP)}$	Peak-to-peak equivalent input noise voltage	f = 0.1Hz to 10Hz		25°C		1.1		μV
In	Equivalent input noise current	f = 1kHz		25°C		1.1		fA/√Hz
THD	Total harmonic distortion	AVD = 2, VO(PP) = 2V,	f = 10kHz, RL = 10kΩ	25°C		0.025%		
ts	Settling time	0.1%		25°C		5		μs
		0.01%				10		
BOM	Maximum output-swing bandwidth	AVD = 1,	RL = 10kΩ	25°C		40		kHz

at specified free-air temperature, $V_{CC\pm}$ =± 15V

PARAMETER		TEST CONDITIONS		TA[1]	TLE2062I TLE2062AI TLE2062BI			UNIT
					MIN	TYP	MAX	
φm	Phase margin at unity gain (See Figure 6-3)	RL = 10kΩ,	CL = 100pF	25°C		46°		

(1) Full range is -40°C to 85°C.

5.23 TLE2062M Electrical Characteristics

at specified free-air temperature, $V_{CC\pm}$ = ± 5V (unless otherwise noted)

PARAMETER			TEST CONDITIONS		T_A [1]	TLE2062M TLE2062AM TLE2062BM			UNIT
						MIN	TYP	MAX	
V_{IO}	Input offset voltage	TLE2062M	V_{IC} = 0,	R_S = 50Ω	25°C		1	5	mV
					Full range			7	
		TLE2062AM			25°C		0.9	4	
					Full range			6	
		TLE2062BM			25°C		0.7	3	
					Full range			5	
a_{VIO}	Temperature coefficient of input offset voltage				Full range		6		μV/°C
	Input offset voltage long-term drift[2]				25°C		0.04		μV/mo
I_{IO}	Input offset current				25°C		1		pA
					Full range			15	nA
I_{IB}	Input bias current				25°C		3		pA
					Full range			30	nA
V_{ICR}	Common-mode input voltage range				25°C	-1.6 to 4	-2 to 6		V
					Full range	-1.6 to 4			V
V_{OM+}	Maximum positive peak output voltage swing		R_L = 10kΩ		25°C	3.5	3.7		V
					Full range	3			
			R_L = 600kΩ		25°C	2.5	3.6		
					Full range	2			
			R_L = 100kΩ		25°C	2.5	3.1		V
					Full range	2			
V_{OM-}	Maximum negative peak output voltage swing		R_L = 10kΩ		25°C	–3.5	–3.9		V
					Full range	–3			
		FK and JG packages	R_L = 600Ω		25°C	–2.5	–3.5		
					Full range	–2			
		D and P packages	R_L = 100Ω		25°C	–2.5	–2.7		V
					Full range	–2			

Copyright © 2026 Texas Instruments Incorporated

5.23 TLE2062M Electrical Characteristics (continued)

at specified free-air temperature, $V_{CC\pm}$ = ± 5V (unless otherwise noted)

PARAMETER			TEST CONDITIONS		T_A (1)	TLE2062M TLE2062AM TLE2062BM MIN	TYP	MAX	UNIT
A_{VD}	Large-signal differential voltage amplification		V_O = ±2.8V	R_L = 10kΩ	25°C	15	80		V/mV
					Full range	2			
		FK and JG packages	V_O = 0 to 2.5V	R_L = 600Ω	25°C	1	65		
					Full range	0.5			
			V_O = 0 to -2.5V	R_L = 600Ω	25°C	1	16		
					Full range	0.5			
		D and P packages	V_O = 0 to 2V	R_L = 100Ω	25°C	0.75	45		
					Full range	0.5			
			V_O = 0 to -2V	R_L = 100Ω	25°C	0.5	3		
					Full range	0.25			
r_i	Input resistance				25°C		10^{12}		Ω
c_i	Input capacitance				25°C		4		pF
z_o	Open-loop output impedance		I_O = 0		25°C		560		Ω
CMRR	Common-mode rejection ratio		V_{IC} = V_{ICRmin},	R_S = 50Ω	25°C	65	82		dB
					Full range	60			
k_{SVR}	Supply-voltage rejection ratio ($\Delta V_{CC\pm}/\Delta V_{IO}$)		$V_{CC\pm}$ = ± 5V to ± 15V,		25°C	75	93		dB
			R_S = 50Ω		Full range	65			
I_{CC}	Supply current		V_O = 0,	No load	25°C		560	620	μA
					Full range			650	

(1) Full range is -55°C to 125°C.
(2) Typical values are based on the input offset voltage shift observed through 168 hours of operating life test at T_A = 150°C extrapolated to T_A = 25°C using the Arrhenius equation and assuming an activation energy of 0.96 eV

5.24 TLE2062M Operating Characteristics

at specified free-air temperature, T_A = 25°C, $V_{CC}\pm$ = ±5 V

PARAMETER		TEST CONDITIONS		TLE2062M TLE2062AM TLE2062BM MIN	TYP	MAX	UNIT
SR	Slew rate at unity gain (See Figure 6-1)	RL = 10kΩ,	CL = 100pF		4		V/μs
V_n	Equivalent input noise voltage (See Figure 6-2)	f = 10Hz,	RS = 20Ω		59		nV/√Hz
		f = 1kHz,	RS = 20Ω		43		
$V_{N(PP)}$	Peak-to-peak equivalent input noise voltage	f = 0.1Hz to 10Hz			1.1		μV
In	Equivalent input noise current	f = 1kHz			1		fA/√Hz
THD	Total harmonic distortion	AVD = 2, VO(PP) = 2V,	f = 10kHz, RL = 10kΩ		0.025%		
B1	Unity-gain bandwidth (See Figure 6-3)	RL = 10kΩ,	CL = 100pF		1.8		MHz
		RL = 100Ω, 0.1%	CL = 100pF		1.3		
ts	Settling time	0.1%			5		μs
		0.01%			10		
BOM	Maximum output-swing bandwidth	AVD = 1,	RL = 10kΩ		140		kHz

Copyright © 2026 Texas Instruments Incorporated

at specified free-air temperature, T_A = 25°C, $V_{CC\pm}$ = ±5 V

PARAMETER		TEST CONDITIONS		TLE2062M TLE2062AM TLE2062BM			UNIT
				MIN	TYP	MAX	
φm	Phase margin at unity gain (See Figure 6-3)	RL = 10kΩ,	CL = 100pF		58°		
		RL = 100Ω,	CL = 100pF		75°		

5.25 TLE2062M Electrical Characteristics

at specified free-air temperature, $V_{CC\pm}$ = ± 15V (unless otherwise noted)

PARAMETER			TEST CONDITIONS		T_A (1)	TLE2062M TLE2062AM TLE2062BM			UNIT
						MIN	TYP	MAX	
V_{IO}	Input offset voltage	TLE2062M	V_{IC} = 0,	R_S = 50Ω	25°C		0.1	4	mV
					Full range			6	
		TLE2062AM			25°C		0.1	2	
					Full range			4	
		TLE2062BM			25°C		0.1	1	
					Full range			3	
a_{VIO}	Temperature coefficient of input offset voltage				Full range		1		μV/°C
	Input offset voltage long-term drift (2)				25°C		0.04		μV/mo
I_{IO}	Input offset current				25°C		2		pA
					Full range			20	nA
I_{IB}	Input bias current				25°C		4		pA
					Full range			40	nA
V_{ICR}	Common-mode input voltage range				25°C	-11 to 13	-12 to 16		V
					Full range	-11 to 13			V
V_{OM+}	Maximum positive peak output voltage swing		R_L = 10kΩ		25°C	13	14.9		V
					Full range	12.5			
			R_L = 600Ω		25°C	12.5	14.5		V
					Full range	11			
V_{OM-}	Maximum negative peak output voltage swing		R_L = 10kΩ		25°C	–13	–14.9		V
					Full range	–12.5			
			R_L = 600kΩ		25°C	–12.5	–14.5		V
					Full range	–11			
A_{VD}	Large-signal differential voltage amplification		V_O = ±10 V	R_L = 10kΩ	25°C	30	225		V/mV
					Full range	20			
			V_O = 0 to 8V	R_L = 600Ω	25°C	25	225		
					Full range	7			
			V_O = 0 to -8 V	R_L = 600Ω	25°C	3	225		
					Full range	1			
r_i	Input resistance				25°C		10^{12}		Ω
c_i	Input capacitance				25°C		4		pF
z_o	Open-loop output impedance		I_O = 0		25°C		280		Ω
CMRR	Common-mode rejection ratio		V_{IC} = V_{ICRmin},	R_S = 50Ω	25°C	72	90		dB
					Full range	65			

Copyright © 2026 Texas Instruments Incorporated

5.25 TLE2062M Electrical Characteristics (continued)

at specified free-air temperature, $V_{CC\pm}$ = ± 15V (unless otherwise noted)

PARAMETER		TEST CONDITIONS	T_A (1)	TLE2062M TLE2062AM TLE2062BM			UNIT
				MIN	TYP	MAX	
k_{SVR}	Supply-voltage rejection ratio ($\Delta V_{CC\pm}/\Delta V_{IO}$)	$V_{CC\pm}$ = ± 5V to ± 15V,	25°C	75	93		dB
		R_S = 50Ω	Full range	65			
I_{CC}	Supply current	V_O = 0, No load	25°C		275	690	µA
			Full range			730	

(1) Full range is -55°C to 125°C.
(2) Typical values are based on the input offset voltage shift observed through 168 hours of operating life test at T_A = 150°C extrapolated to T_A = 25°C using the Arrhenius equation and assuming an activation energy of 0.96 eV

5.26 TLE2062M Operating Characteristics

at specified free-air temperature, $V_{CC\pm}$ =± 15V

PARAMETER		TEST CONDITIONS		TA(1)	TLE2062M TLE2062AM TLE2062BM			UNIT
					MIN	TYP	MAX	
SR	Slew rate at unity gain (See Figure 6-1)	RL = 10kΩ,	CL = 100pF	25°C	2.6	4		V/µs
				Full range	1.8			
V_n	Equivalent input noise voltage (See Figure 6-2)	f = 10Hz,	RS = 20Ω	25°C		70		nV/√Hz
		f = 1kHz,	RS = 20Ω			40		
$V_{N(PP)}$	Peak-to-peak equivalent input noise voltage	f = 0.1Hz to 10Hz		25°C		1.1		µV
In	Equivalent input noise current	f = 1kHz		25°C		1.1		fA/√Hz
THD	Total harmonic distortion	AVD = 2, VO(PP) = 2V,	f = 10kHz, RL = 10kΩ	25°C		0.025%		
B1	Unity-gain bandwidth (See Figure 6-3)	RL = 10kΩ,	CL = 100pF	25°C		2		MHz
		RL = 600Ω	CL = 100pF			1.5		
ts	Settling time	0.1%		25°C		5		µs
		0.01%				10		
BOM	Maximum output-swing bandwidth	AVD = 1,	RL = 10kΩ	25°C		40		kHz
φm	Phase margin at unity gain (See Figure 6-3)	RL = 10kΩ,	CL = 100pF	25°C		60°		
		RL = 600Ω,	CL = 100pF			70°		

(1) Full range is -55°C to 125°C.

5.27 TLE2064C Electrical Characteristics

at specified free-air temperature, $V_{CC\pm}$ = ± 5V (unless otherwise noted)

PARAMETER			TEST CONDITIONS		T_A (1)	TLE2064C TLE2064AC TLE2064BC			UNIT
						MIN	TYP	MAX	
V_{IO}	Input offset voltage	TLE2064C	V_{IC} = 0,	R_S = 50Ω	25°C		0.1	7	mV
					Full range			7.9	
		TLE2064AC			25°C		0.1	6	
					Full range			6.9	
		TLE2064BC			25°C		0.1	3.5	
					Full range			4.4	
a_{VIO}	Temperature coefficient of input offset voltage				Full range		1		μV/°C
I_{IO}	Input offset current				25°C		±5		pA
					Full range			0.8	nA
I_{IB}	Input bias current				25°C		±10		pA
					Full range			2	nA
V_{ICR}	Common-mode input voltage range				25°C	-1.6 to 4	-2 to 6		V
					Full range	-1.6 to 4			V
V_{OM+}	Maximum positive peak output voltage swing		R_L = 10kΩ		25°C	3.5	4.9		V
					Full range	3.3			
			R_L = 100kΩ		25°C	2.5	4.5		V
					Full range	2			
V_{OM-}	Maximum negative peak output voltage swing		R_L = 10kΩ		25°C	–3.7	–4.9		V
					Full range	–3.3			
			R_L = 100kΩ		25°C	–2.5	–4.5		V
					Full range	–2			
A_{VD}	Large-signal differential voltage amplification		V_O = ±2.8 V	R_L = 10Ω	25°C	15	225		V/mV
					Full range	2			
			V_O = 0 to 2V	R_L = 100Ω	25°C	0.75	225		
					Full range	0.5			
			V_O = 0 to -2V	R_L = 100Ω	25°C	0.5	225		
					Full range	0.15			
Z_{ID}	Differential						540 || 3		GΩ || pF
Z_{ICM}	Common-mode						6 || 1		TΩ || pF
z_o	Open-loop output impedance		I_O = 0		25°C		575		Ω
CMRR	Common-mode rejection ratio		V_{IC} = V_{ICRmin},	R_S = 50Ω	25°C	65	82		dB
					Full range	65			
k_{SVR}	Supply-voltage rejection ratio ($\Delta V_{CC\pm}/\Delta V_{IO}$)		$V_{CC\pm}$ = ± 5V to ± 15V,		25°C	75	135		dB
			R_S = 50Ω		Full range	75			
I_{CC}	Supply current (four amplifiers)		V_O = 0,	No load	25°C		0.6	1.3	mA
					Full range			1.3	

Copyright © 2026 Texas Instruments Incorporated

5.27 TLE2064C Electrical Characteristics (continued)

at specified free-air temperature, $V_{CC\pm}$ = ± 5V (unless otherwise noted)

PARAMETER		TEST CONDITIONS		T_A (1)	TLE2064C TLE2064AC TLE2064BC			UNIT
					MIN	TYP	MAX	
V_{O1}/ V_{O2}	Crosstalk attenuation	A_{VD} = 1000,	f = 1kHz	25°C		120		dB

(1) Full range is 0°C to 70°C.

5.28 TLE2064C Operating Characteristics

at specified free-air temperature, $V_{CC\pm}$ =± 5V

PARAMETER		TEST CONDITIONS		TA(1)	TLE2064C TLE2064AC TLE2064BC			UNIT
					MIN	TYP	MAX	
SR	Slew rate at unity gain (See Figure 6-1)	RL = 10kΩ,	CL = 100pF	25°C	2.2	4		V/µs
				Full range	2.1			
V_n	Equivalent input noise voltage (See Figure 6-2)	f = 10Hz,	RS = 20Ω	25°C		59		nV/√Hz
		f = 1kHz,	RS = 20Ω			43		
$V_{N(PP)}$	Peak-to-peak equivalent input noise voltage	f = 0.1Hz to 10Hz		25°C		1.1		µV
In	Equivalent input noise current	f = 1kHz		25°C		1		fA/√Hz
THD	Total harmonic distortion	AVD = 2, VO(PP) = 2V,	f = 10kHz, RL = 10kΩ	25°C		0.025%		
ts	Settling time	0.1%		25°C		5		µs
		0.01%				10		
BOM	Maximum output-swing bandwidth	AVD = 1,	RL = 10kΩ	25°C		140		kHz
φm	Phase margin at unity gain (See Figure 6-3)	RL = 10kΩ,	CL = 100pF	25°C		46°		

(1) Full range is 0°C to 70°C.

5.29 TLE2064C Electrical Characteristics

at specified free-air temperature, $V_{CC\pm}$ = ± 15V (unless otherwise noted)

PARAMETER			TEST CONDITIONS	T_A (1)	TLE2064C TLE2064AC TLE2064BC MIN	TYP	MAX	UNIT
V_{IO}	Input offset voltage	TLE2064C	V_{IC} = 0, R_S = 50Ω	25°C		0.1	6	mV
				Full range			6.9	
		TLE2064AC		25°C		0.1	4	
				Full range			4.9	
		TLE2064BC		25°C		0.1	2	
				Full range			4	
a_{VIO}	Temperature coefficient of input offset voltage			Full range		1		μV/°C
I_{IO}	Input offset current			25°C		±5		pA
				Full range			1	nA
I_{IB}	Input bias current			25°C		±10		pA
				Full range			3	nA
V_{ICR}	Common-mode input voltage range			25°C	-11 to 13	-12 to 16		V
				Full range	-11 to 13			V
V_{OM+}	Maximum positive peak output voltage swing		R_L = 10kΩ	25°C	13.2	14.9		V
				Full range	13			
			R_L = 600Ω	25°C	12.5	14.5		V
				Full range	12			
V_{OM-}	Maximum negative peak output voltage swing		R_L = 10kΩ	25°C	–13.2	–14.9		V
				Full range	–13			
			R_L = 600kΩ	25°C	–12.5	–14.5		V
				Full range	–12			
A_{VD}	Large-signal differential voltage amplification		V_O = ±10V, R_L = 10kΩ	25°C	30	225		V/mV
				Full range	20			
			V_O = 0 to 8V, R_L = 600Ω	25°C	25	225		
				Full range	10			
			V_O = 0 to -8V, R_L = 600Ω	25°C	3	225		
				Full range	1			
Z_{ID}	Differential					540 || 3		GΩ || pF
Z_{ICM}	Common-mode					6 || 1		TΩ || pF
z_o	Open-loop output impedance		I_O = 0	25°C		575		Ω
CMRR	Common-mode rejection ratio		V_{IC} = V_{ICRmin}, R_S = 50Ω	25°C	72	90		dB
				Full range	70			
k_{SVR}	Supply-voltage rejection ratio ($\Delta V_{CC\pm}/\Delta V_{IO}$)		$V_{CC\pm}$ = ± 5V to ± 15V,	25°C	75	93		dB
			R_S = 50Ω	Full range	75			
I_{CC}	Supply current (four amplifiers)		V_O = 0, No load	25°C		0.6	1.4	μA
				Full range			1.5	

Copyright © 2026 Texas Instruments Incorporated

5.29 TLE2064C Electrical Characteristics (continued)

at specified free-air temperature, $V_{CC\pm}$ = ± 15V (unless otherwise noted)

PARAMETER		TEST CONDITIONS		T_A (1)	TLE2064C TLE2064AC TLE2064BC			UNIT
					MIN	TYP	MAX	
V_{O1}/ V_{O2}	Crosstalk attenuation	A_{VD} = 1000,	f = 1kHz	25°C		120		dB

(1) Full range is 0°C to 70°C.

5.30 TLE2064C Operating Characteristics

at specified free-air temperature, $V_{CC\pm}$ =± 15V

PARAMETER		TEST CONDITIONS		TA(1)	TLE2064C TLE2064AC TLE2064BC			UNIT
					MIN	TYP	MAX	
SR	Slew rate at unity gain (See Figure 6-1)	RL = 10kΩ,	CL = 100pF	25°C	2.6	4		V/µs
				Full range	2.5			
V_n	Equivalent input noise voltage (See Figure 6-2)	f = 10Hz,	RS = 20Ω	25°C		70		nV/√Hz
		f = 1kHz,	RS = 20Ω			40		
$V_{N(PP)}$	Peak-to-peak equivalent input noise voltage	f = 0.1Hz to 10Hz		25°C		1.1		µV
In	Equivalent input noise current	f = 1kHz		25°C		1		fA/√Hz
THD	Total harmonic distortion	AVD = 2, VO(PP) = 2V,	f = 10kHz, RL = 10kΩ	25°C		0.025%		
ts	Settling time	0.1%		25°C		5		µs
		0.01%				10		
BOM	Maximum output-swing bandwidth	AVD = 1,	RL = 10kΩ	25°C		40		kHz
φm	Phase margin at unity gain (See Figure 6-3)	RL = 10kΩ,	CL = 100pF	25°C		46°		

(1) Full range is 0°C to 70°C.

5.31 TLE2064I Electrical Characteristics

at specified free-air temperature, $V_{CC\pm}$ = ± 5V (unless otherwise noted)

PARAMETER			TEST CONDITIONS	T_A (1)	TLE2064I TLE2064AI TLE2064BI MIN	TYP	MAX	UNIT
V_{IO}	Input offset voltage	TLE2064I	V_{IC} = 0, R_S = 50Ω	25°C		0.1	7	mV
				Full range			8.3	
		TLE2064AI		25°C		0.1	6	
				Full range			7.3	
		TLE2064BI		25°C		0.1	3.5	
				Full range			4.8	
a_{VIO}	Temperature coefficient of input offset voltage			Full range		1		μV/°C
I_{IO}	Input offset current			25°C		±5		pA
				Full range			2	nA
I_{IB}	Input bias current			25°C		±10		pA
				Full range			4	nA
V_{ICR}	Common-mode input voltage range			25°C	-1.6 to 4	-2 to 6		V
				Full range	-1.6 to 4			V
V_{OM+}	Maximum positive peak output voltage swing		R_L = 10kΩ	25°C	3.5	4.9		V
				Full range	3.1			
			R_L = 100kΩ	25°C	2.5	4.5		V
				Full range	2			
V_{OM-}	Maximum negative peak output voltage swing		R_L = 10kΩ	25°C	–3.7	–4.9		V
				Full range	–3.1			
			R_L = 100kΩ	25°C	–2.5	–4.5		V
				Full range	–2			
A_{VD}	Large-signal differential voltage amplification		V_O = ±2.8 V, R_L = 10Ω	25°C	15	225		V/mV
				Full range	2			
			V_O = 0 to 2V, R_L = 100Ω	25°C	0.75	225		
				Full range	0.5			
			V_O = 0 to -2V, R_L = 100Ω	25°C	0.5	225		
				Full range	0.15			
Z_{ID}	Differential					540 || 3		GΩ || pF
Z_{ICM}	Common-mode					6 || 1		TΩ || pF
z_o	Open-loop output impedance		I_O = 0	25°C		575		Ω
CMRR	Common-mode rejection ratio		V_{IC} = V_{ICRmin}, R_S = 50Ω	25°C	65	82		dB
				Full range	65			
k_{SVR}	Supply-voltage rejection ratio ($\Delta V_{CC\pm}/\Delta V_{IO}$)		$V_{CC\pm}$ = ± 5V to ± 15V, R_S = 50Ω	25°C	75	135		dB
				Full range	65			
I_{CC}	Supply current (four amplifiers)		V_O = 0, No load	25°C		0.6	1.3	mA
				Full range			1.3	

Copyright © 2026 Texas Instruments Incorporated

5.31 TLE2064I Electrical Characteristics (continued)

at specified free-air temperature, $V_{CC\pm}$ = ± 5V (unless otherwise noted)

PARAMETER		TEST CONDITIONS		T_A (1)	TLE2064I TLE2064AI TLE2064BI			UNIT
					MIN	TYP	MAX	
V_{O1}/ V_{O2}	Crosstalk attenuation	A_{VD} = 1000,	f = 1kHz	25°C		120		dB

(1) Full range is -40°C to 85°C.

5.32 TLE2064I Operating Characteristics

at specified free-air temperature, $V_{CC\pm}$ =± 5V

PARAMETER		TEST CONDITIONS		TA(1)	TLE2064I TLE2064AI TLE2064BI			UNIT
					MIN	TYP	MAX	
SR	Slew rate at unity gain (See Figure 6-1)	RL = 10kΩ,	CL = 100pF	25°C	2.2	4		V/µs
				Full range	1.7			
V_n	Equivalent input noise voltage (See Figure 6-2)	f = 10Hz,	RS = 20Ω	25°C		59		nV/√Hz
		f = 1kHz,	RS = 20Ω			43		
$V_{N(PP)}$	Peak-to-peak equivalent input noise voltage	f = 0.1Hz to 10Hz		25°C		1.1		µV
In	Equivalent input noise current	f = 1kHz		25°C		1		fA/√Hz
THD	Total harmonic distortion	AVD = 2, VO(PP) = 2V,	f = 10kHz, RL = 10kΩ	25°C		0.025%		
ts	Settling time	0.1%		25°C		5		µs
		0.01%				10		
BOM	Maximum output-swing bandwidth	AVD = 1,	RL = 10kΩ	25°C		140		kHz
φm	Phase margin at unity gain (See Figure 6-3)	RL = 10kΩ,	CL = 100pF	25°C		46°		

(1) Full range is -40°C to 85°C.

5.33 TLE2064I Electrical Characteristics

at specified free-air temperature, $V_{CC\pm}$ = ± 15V (unless otherwise noted)

PARAMETER			TEST CONDITIONS	T_A (1)	TLE2064I TLE2064AI TLE2064BI			UNIT
					MIN	TYP	MAX	
V_{IO}	Input offset voltage	TLE2064I	V_{IC} = 0, R_S = 50Ω	25°C		0.1	6	mV
				Full range			7.3	
		TLE2064AI		25°C		0.1	4	
				Full range			5.3	
		TLE2064BI		25°C		0.1	2	
				Full range			3.3	
a_{VIO}	Temperature coefficient of input offset voltage			Full range		1		μV/°C
I_{IO}	Input offset current			25°C		±5		pA
				Full range			3	nA
I_{IB}	Input bias current			25°C		±10		pA
				Full range			5	nA
V_{ICR}	Common-mode input voltage range			25°C	-11 to 13	-12 to 16		V
				Full range	-11 to 13			V
V_{OM+}	Maximum positive peak output voltage swing		R_L = 10kΩ	25°C	13.2	14.9		V
				Full range	13			
			R_L = 600Ω	25°C	12.5	14.5		V
				Full range	12			
V_{OM-}	Maximum negative peak output voltage swing		R_L = 10kΩ	25°C	–13.2	–14.9		V
				Full range	–13			
			R_L = 600kΩ	25°C	–12.5	–14.5		V
				Full range	–12			
A_{VD}	Large-signal differential voltage amplification		V_O = ±10V R_L = 10kΩ	25°C	30	225		V/mV
				Full range	20			
			V_O = 0 to 8V R_L = 600Ω	25°C	25	225		
				Full range	10			
			V_O = 0 to -8V R_L = 600Ω	25°C	3	225		
				Full range	1			
Z_{ID}	Differential					540 || 3		GΩ || pF
Z_{ICM}	Common-mode					6 || 1		TΩ || pF
z_o	Open-loop output impedance		I_O = 0	25°C		575		Ω
CMRR	Common-mode rejection ratio		V_{IC} = V_{ICRmin}, R_S = 50Ω	25°C	72	90		dB
				Full range	65			
k_{SVR}	Supply-voltage rejection ratio ($\Delta V_{CC\pm}/\Delta V_{IO}$)		$V_{CC\pm}$ = ± 5V to ± 15V,	25°C	75	93		dB
			R_S = 50Ω	Full range	65			
I_{CC}	Supply current (four amplifiers)		V_O = 0, No load	25°C		0.6	1.4	mA
				Full range			1.5	

Copyright © 2026 Texas Instruments Incorporated

5.33 TLE2064I Electrical Characteristics (continued)

at specified free-air temperature, $V_{CC\pm}$ = ± 15V (unless otherwise noted)

PARAMETER		TEST CONDITIONS		T_A (1)	TLE2064I TLE2064AI TLE2064BI			UNIT
					MIN	TYP	MAX	
V_{O1}/ V_{O2}	Crosstalk attenuation	A_{VD} = 1000,	f = 1kHz	25°C		120		dB

(1) Full range is -40°C to 85°C.

5.34 TLE2064I Operating Characteristics

at specified free-air temperature, $V_{CC\pm}$ =± 15V

PARAMETER		TEST CONDITIONS		TA(1)	TLE2064I TLE2064AI TLE2064BI			UNIT
					MIN	TYP	MAX	
SR	Slew rate at unity gain (See Figure 6-1)	RL = 10kΩ,	CL = 100pF	25°C	2.6	4		V/µs
				Full range	2.1			
V_n	Equivalent input noise voltage (See Figure 6-2)	f = 10Hz,	RS = 20Ω	25°C		70		nV/√Hz
		f = 1kHz,	RS = 20Ω			40		
$V_{N(PP)}$	Peak-to-peak equivalent input noise voltage	f = 0.1Hz to 10Hz		25°C		1.1		µV
In	Equivalent input noise current	f = 1kHz		25°C		1.1		fA/√Hz
THD	Total harmonic distortion	AVD = 2, VO(PP) = 2V,	f = 10kHz, RL = 10kΩ	25°C		0.025%		
ts	Settling time	0.1%		25°C		5		µs
		0.01%				10		
BOM	Maximum output-swing bandwidth	AVD = 1,	RL = 10kΩ	25°C		40		kHz
φm	Phase margin at unity gain (See Figure 6-3)	RL = 10kΩ,	CL = 100pF	25°C		46°		

(1) Full range is -40°C to 85°C.

5.35 TLE2064M Electrical Characteristics

at specified free-air temperature, $V_{CC\pm}$ = ± 5V (unless otherwise noted)

PARAMETER			TEST CONDITIONS	T_A [1]	TLE2064M TLE2064AM TLE2064BM MIN	TYP	MAX	UNIT
V_{IO}	Input offset voltage	TLE2064M	V_{IC} = 0, R_S = 50Ω	25°C		1.2	7	mV
				Full range			9	
		TLE2064AM		25°C		1.2	6	
				Full range			8	
		TLE2064BM		25°C		0.8	3.5	
				Full range			5.5	
a_{VIO}	Temperature coefficient of input offset voltage			Full range		6		μV/°C
	Input offset voltage long-term drift[2]			25°C		0.04		μ V/mo
I_{IO}	Input offset current			25°C		1		pA
				Full range			15	nA
I_{IB}	Input bias current			25°C		3		pA
				Full range			30	nA
V_{ICR}	Common-mode input voltage range			25°C	-1.6 to 4	-2 to 6		V
				Full range	-1.6 to 4			V
V_{OM+}	Maximum positive peak output voltage swing		R_L = 10kΩ	25°C	3.5	3.7		V
				Full range	3			
			R_L = 600kΩ	25°C	2.5	3.6		
				Full range	2			
			R_L = 100kΩ	25°C	2.5	3.1		V
				Full range	2			
V_{OM-}	Maximum negative peak output voltage swing		R_L = 10kΩ	25°C	-3.5	-3.9		V
				Full range	-3			
		FK and JG packages	R_L = 600Ω	25°C	-2.5	-3.5		
				Full range	-2			
		D and P packages	R_L = 100Ω	25°C	–2.5	–2.7		V
				Full range	–2			
A_{VD}	Large-signal differential voltage amplification		V_O = ±2.8V R_L = 10kΩ	25°C	15	80		V/mV
				Full range	2			
		FK and JG packages	V_O = 0 to 2.5V R_L = 600Ω	25°C	1	65		
				Full range	0.5			
			V_O = 0 to -2.5 V R_L = 600Ω	25°C	1	16		
				Full range	0.5			
		D and P packages	V_O = 0 to 2V R_L = 100Ω	25°C	0.75	45		
				Full range	0.25			
			V_O = 0 to -2V R_L = 100Ω	25°C	0.4	3		
				Full range	0.15			
r_i	Input resistance			25°C		10^{12}		Ω
c_i	Input capacitance			25°C		4		pF
z_o	Open-loop output impedance		I_O = 0	25°C		560		Ω

Copyright © 2026 Texas Instruments Incorporated

5.35 TLE2064M Electrical Characteristics (continued)

at specified free-air temperature, $V_{CC\pm}$ = ± 5V (unless otherwise noted)

PARAMETER		TEST CONDITIONS		T_A (1)	TLE2064M TLE2064AM TLE2064BM			UNIT
					MIN	TYP	MAX	
CMRR	Common-mode rejection ratio	V_{IC} = V_{ICRmin},	R_S = 50Ω	25°C	65	82		dB
				Full range	60			
k_{SVR}	Supply-voltage rejection ratio ($\Delta V_{CC\pm}/\Delta V_{IO}$)	$V_{CC\pm}$ = ± 5V to ± 15V,		25°C	75	93		dB
		R_S = 50Ω		Full range	65			
I_{CC}	Supply current (four amplifiers)	V_O = 0,	No load	25°C		1.12	1.3	mA
				Full range			1.3	
ΔI_{CC}	Supply-current change over operating temperature range (four amplifiers)			Full range		144		μA
V_{O1}/V_{O2}	Crosstalk attenuation	A_{VD} = 1000, f = 1kHz		25°C		120		dB

(1) Full range is -55°C to 125°C.
(2) Typical values are based on the input offset voltage shift observed through 168 hours of operating life test at T_A = 150°C extrapolated to T_A = 25°C using the Arrhenius equation and assuming an activation energy of 0.96eV

5.36 TLE2064M Operating Characteristics

, $V_{CC\pm}$ = ±5V, T_A = 25°C

PARAMETER		TEST CONDITIONS		TA	TLE2064M TLE2064AM TLE2064BM			UNIT
					MIN	TYP	MAX	
SR	Slew rate at unity gain (See Figure 6-1)	RL = 10kΩ,	CL = 100pF	25°C		4		V/μs
V_n	Equivalent input noise voltage (See Figure 6-2)	f = 10Hz,	RS = 20Ω	Full range		59		nV/√Hz
		f = 1kHz,	RS = 20Ω	25°C		43		
$V_{N(PP)}$	Peak-to-peak equivalent input noise voltage	f = 0.1Hz to 10Hz		25°C		1.1		μV
In	Equivalent input noise current	f = 1kHz		25°C		1		fA/√Hz
THD	Total harmonic distortion	AVD = 2, VO(PP) = 2V,	f = 10kHz, RL = 10kΩ	25°C		0.025%		
B1	Unity-gain bandwidth (See Figure 6-3)	RL = 10kΩ,	CL = 100pF	25°C		1.8		MHz
		RL = 100Ω, 0.1%	CL = 100pF	25°C		1.3		
ts	Settling time	0.1%		25°C		5		μs
		0.01%		25°C		10		
BOM	Maximum output-swing bandwidth	AVD = 1,	RL = 10kΩ	25°C		140		kHz
φm	Phase margin at unity gain (See Figure 6-3)	RL = 10kΩ,	CL = 100pF	Full range		58°		
		RL = 100Ω,	CL = 100pF	25°C		75°		

Copyright © 2026 Texas Instruments Incorporated

5.37 TLE2064M Electrical Characteristics

at specified free-air temperature, $V_{CC\pm}$ = ± 15V (unless otherwise noted)

PARAMETER			TEST CONDITIONS	T_A (1)	TLE2064M TLE2064AM TLE2064BM			UNIT
					MIN	TYP	MAX	
V_{IO}	Input offset voltage	TLE2064M	V_{IC} = 0, R_S = 50Ω	25°C		0.1	6	mV
				Full range			8	
		TLE2064AM		25°C		0.1	4	
				Full range			6	
		TLE2064BM		25°C		0.1	2	
				Full range			4	
a_{VIO}	Temperature coefficient of input offset voltage			Full range		1		μV/°C
	Input offset voltage long-term drift (2)			25°C		0.04		μ V/mo
I_{IO}	Input offset current			25°C		2		pA
				Full range			20	nA
I_{IB}	Input bias current			25°C		4		pA
				Full range			40	nA
V_{ICR}	Common-mode input voltage range			25°C	-11 to 13	-12 to 16		V
				Full range	-11 to 13			V
V_{OM+}	Maximum positive peak output voltage swing		R_L = 10kΩ	25°C	13	14.9		V
				Full range	12.5			
			R_L = 600Ω	25°C	12.5	14.5		V
				Full range	12			
V_{OM-}	Maximum negative peak output voltage swing		R_L = 10kΩ	25°C	–13	–14.9		V
				Full range	–12.5			
			R_L = 600kΩ	25°C	–13	–14.5		V
				Full range	–12.5			
A_{VD}	Large-signal differential voltage amplification		V_O = ±10V R_L = 10kΩ	25°C	30	225		V/mV
				Full range	20			
			V_O = 0 to 8V R_L = 600Ω	25°C	25	225		
				Full range	7			
			V_O = 0 to -8V R_L = 600Ω	25°C	3	225		
				Full range	1			
r_i	Input resistance			25°C		10^{12}		Ω
c_i	Input capacitance			25°C		4		pF
z_o	Open-loop output impedance		I_O = 0	25°C		280		Ω
CMRR	Common-mode rejection ratio		V_{IC} = V_{ICRmin}, R_S = 50Ω	25°C	72	90		dB
				Full range	65			
k_{SVR}	Supply-voltage rejection ratio ($\Delta V_{CC\pm}/\Delta V_{IO}$)		$V_{CC\pm}$ = ± 5V to ± 15V,	25°C	75	93		dB
			R_S = 50Ω	Full range	65			
I_{CC}	Supply current (four amplifiers)		V_O = 0, No load	25°C		0.6	1.4	mA
				Full range			1.5	

Copyright © 2026 Texas Instruments Incorporated

5.37 TLE2064M Electrical Characteristics (continued)

at specified free-air temperature, $V_{CC\pm}$ = ± 15V (unless otherwise noted)

PARAMETER		TEST CONDITIONS		T_A (1)	TLE2064M TLE2064AM TLE2064BM			UNIT
					MIN	TYP	MAX	
V_{O1}/ V_{O2}	Crosstalk attenuation	A_{VD} = 1000,	f = 1kHz	25°C		120		dB

(1) Full range is -55°C to 125°C.
(2) Typical values are based on the input offset voltage shift observed through 168 hours of operating life test at T_A = 150°C extrapolated to T_A = 25°C using the Arrhenius equation and assuming an activation energy of 0.96 eV

5.38 TLE2064M Operating Characteristics

at specified free-air temperature, $V_{CC\pm}$ =± 15V

PARAMETER		TEST CONDITIONS		TA(1)	TLE2064M TLE2064AM TLE2064BM			UNIT
					MIN	TYP	MAX	
SR	Slew rate at unity gain (See Figure 6-1)	RL = 10kΩ,	CL = 100pF	25°C	2.6	4		V/µs
				Full range	1.8			
V_n	Equivalent input noise voltage (See Figure 6-2)	f = 10Hz,	RS = 20Ω	25°C		70		nV/√Hz
		f = 1kHz,	RS = 20Ω			40		
$V_{N(PP)}$	Peak-to-peak equivalent input noise voltage	f = 0.1Hz to 10Hz		25°C		1.1		µV
In	Equivalent input noise current	f = 1kHz		25°C		1.1		fA/√Hz
THD	Total harmonic distortion	AVD = 2, VO(PP) = 2V,	f = 10kHz, RL = 10kΩ	25°C		0.025%		
B1	Unity-gain bandwidth (See Figure 6-3)	RL = 10kΩ,	CL = 100pF	25°C		2		MHz
		RL = 600Ω	CL = 100pF			1.5		
ts	Settling time	0.1%		25°C		5		µs
		0.01%				10		
BOM	Maximum output-swing bandwidth	AVD = 1,	RL = 10kΩ	25°C		40		kHz
φm	Phase margin at unity gain (See Figure 6-3)	RL = 10kΩ,	CL = 100pF	25°C		60°		
		RL = 600Ω,	CL = 100pF			70°		

(1) Full range is -55°C to 125°C.

5.39 Typical Characteristics

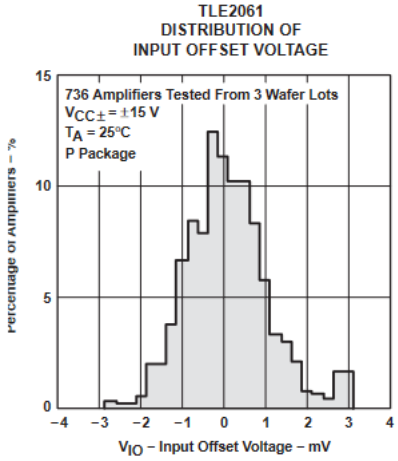

Figure 5-1. TLE2061 Distribution of Input Offset Voltage

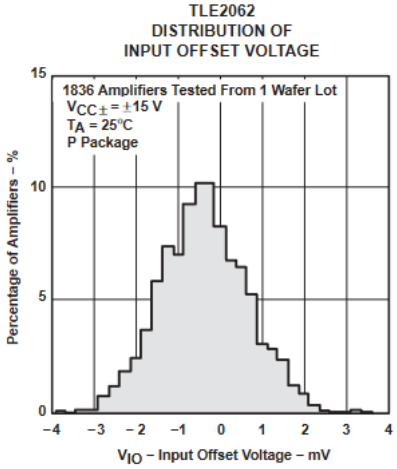

Figure 5-2. TLE2062 Distribution of Input Offset Voltage

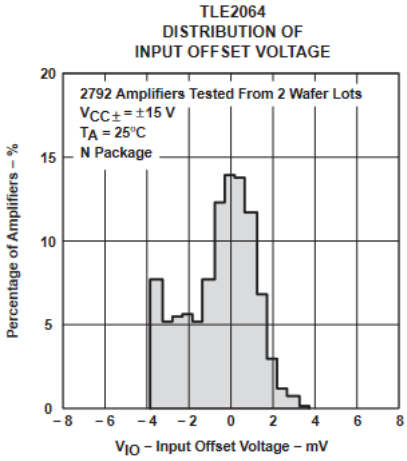

Figure 5-3. TLE2064 Distribution of Input Offset Voltage

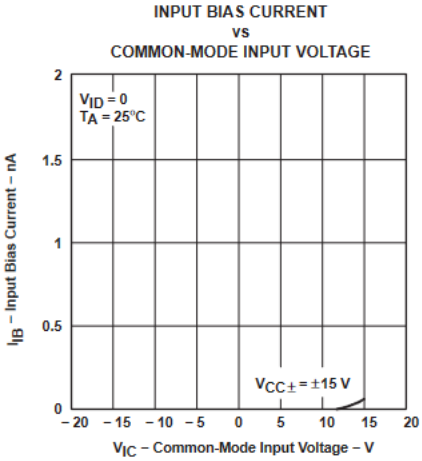

Figure 5-4. Input Bias Current vs Common Mode Input Voltage

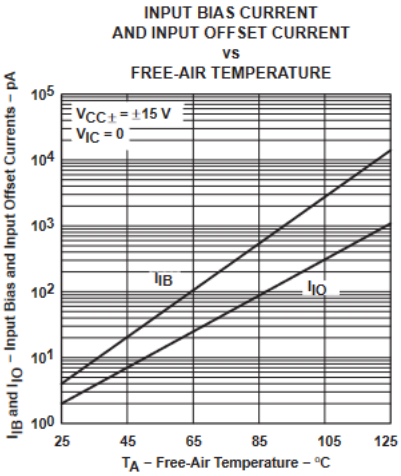

Figure 5-5. Input Bias Current and Input Offset Current vs Free-Air Temperature

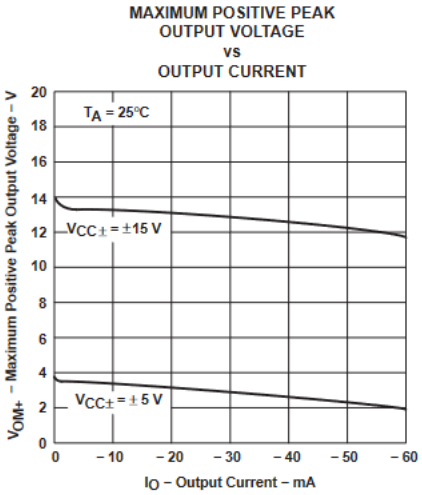

Figure 5-6. Maximum Positive Peak Output Voltage vs Output Current

Copyright © 2026 Texas Instruments Incorporated

5.39 Typical Characteristics (continued)

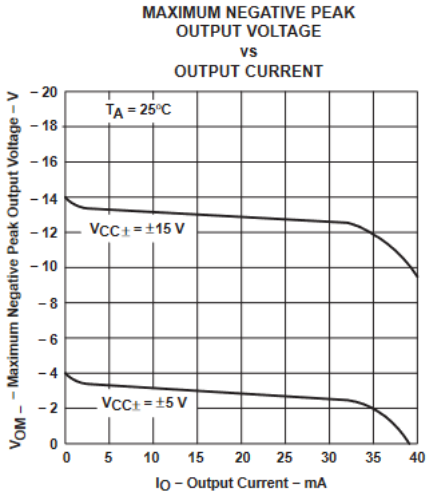

Figure 5-7. Maximum Negative Peak Output Voltage vs Output Current

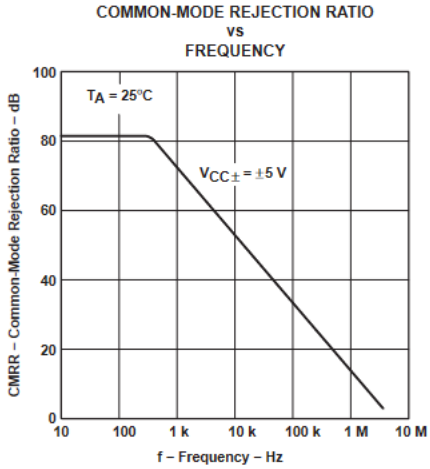

Figure 5-8. Common Mode Rejection Ratio vs Frequency

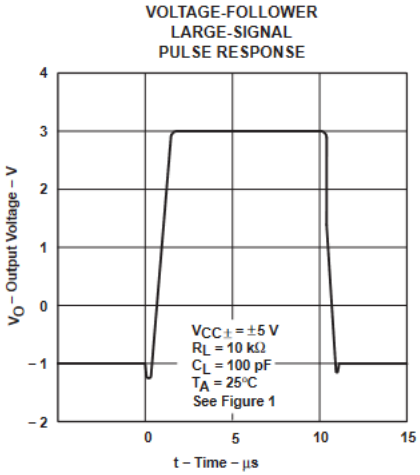

Figure 5-9. Voltage Follower Large Signal Pulse Response

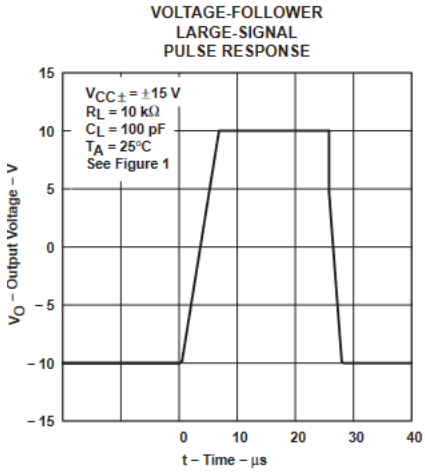

Figure 5-10. Voltage Follower Large Signal Pulse Response

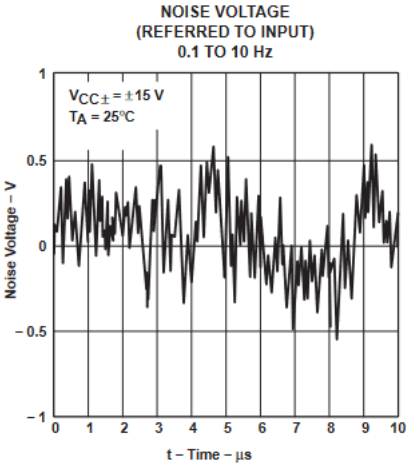

Figure 5-11. Noise Voltage

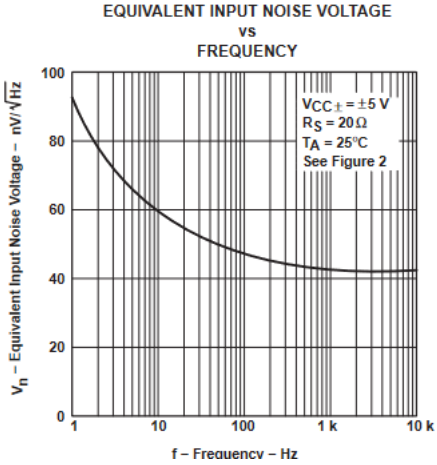

Figure 5-12. Equivalent Input Noise Voltage vs Frequency

5.39 Typical Characteristics (continued)

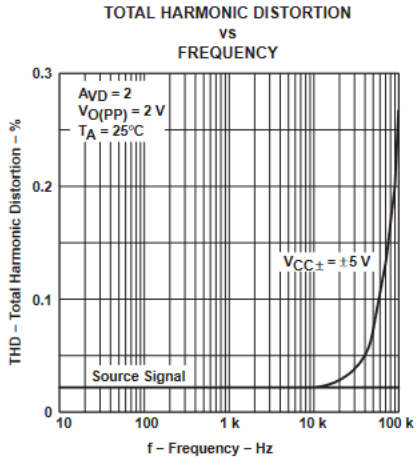

Figure 5-13. Total Harmonic Distortion vs Frequency

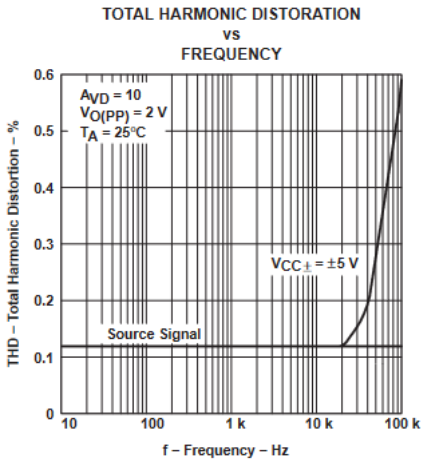

Figure 5-14. Total Harmonic Distortion vs Frequency

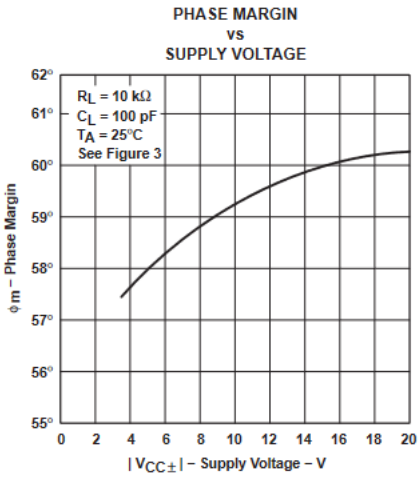

Figure 5-15. Phase Margin vs Supply Voltage

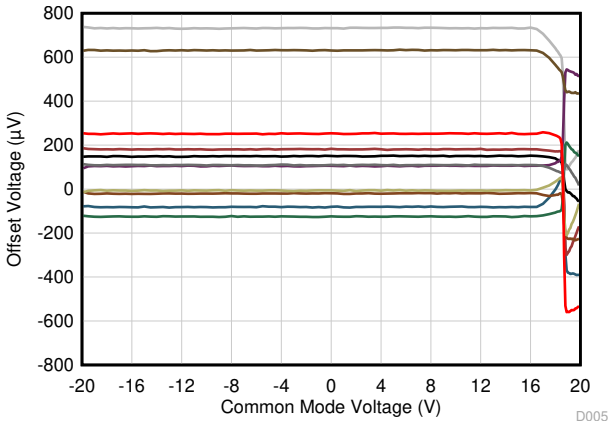

T_A = 25°C

Each color represents one sample device.

Figure 5-16. Offset Voltage vs Common-Mode Voltage

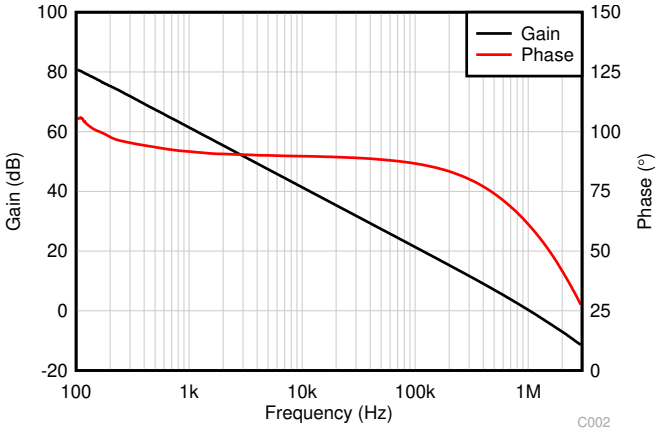

C_L = 20pF

Figure 5-17. Open-Loop Gain and Phase vs Frequency

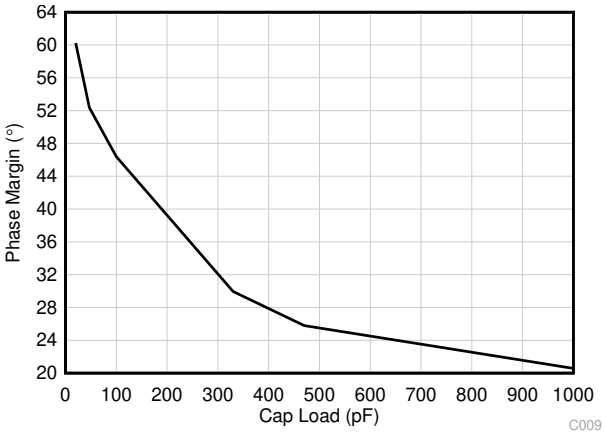

Figure 5-18. Phase Margin vs Capacitive Load

Copyright © 2026 Texas Instruments Incorporated

6 Parameter Measurement Information

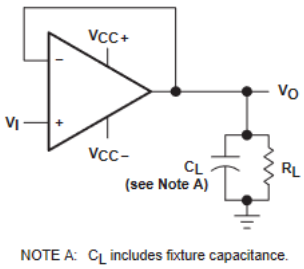

Figure 6-1. Slew-Rate Test Circuit

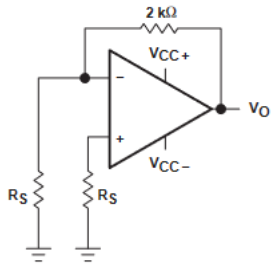

Figure 6-2. Noise-Voltage Test Circuit

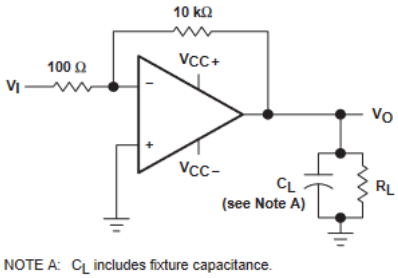

Figure 6-3. Unity-Gain Bandwidth and Phase-Margin Test Circuit

6.1 Typical Values

Typical values presented in this data sheet represent the median (50% point) of device parametric performance.

6.2 Input Bias and Offset Current

At the picoampere bias current level typical of the TLE206x, TLE2064xA, and TLE206xB, accurate measurement of the bias current becomes difficult. Not only does this measurement require a picoammeter, but test socket leakages can easily exceed the actual device bias currents. To accurately measure these small currents, Texas Instruments uses a two-step process. The socket leakage is measured using picoammeters with bias voltages applied but with no device in the socket. The device is then inserted into the socket and a second test that measures both the socket leakage and the device input bias current is performed. The two measurements are then subtracted algebraically to determine the bias current of the device.

Copyright © 2026 Texas Instruments Incorporated

7 Application and Implementation

Note

Information in the following applications sections is not part of the TI component specification, and TI does not warrant its accuracy or completeness. TI's customers are responsible for determining suitability of components for their purposes, as well as validating and testing their design implementation to confirm system functionality.

7.1 Application Information

7.1.1 Input Characteristics

The TLE206x, TLE206xA, and TLE206xB are specified with a minimum and a maximum input voltage that, if exceeded at either input, can cause the device to malfunction. Due to the extremely high input impedance and resulting low bias current requirements, the TLE206x, TLE206xA, and TLE206xB are designed for low-level signal processing. However, leakage currents on printed circuit boards and sockets can easily exceed bias current requirements and cause degradation in system performance. To include guard rings around inputs (see Figure 7-1) is a good practice. Drive these guards from a low-impedance source at the same voltage level as the common-mode input

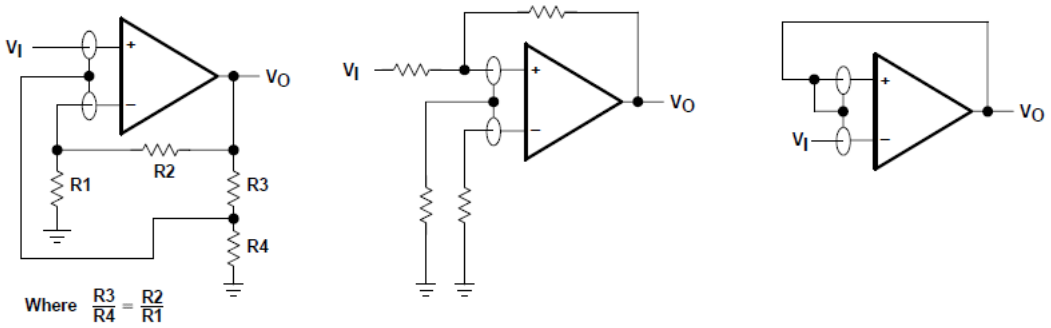

Figure 7-1. Use of Guard Rings

7.1.2 TLE2061 Input Offset Voltage Nulling

Some versions of TLE2061 series offers external null pins that can be used to further reduce the input offset voltage. The circuit can be connected if the feature is desired (see Figure 7-2). When external nulling is not needed, the null pins can be left unconnected.

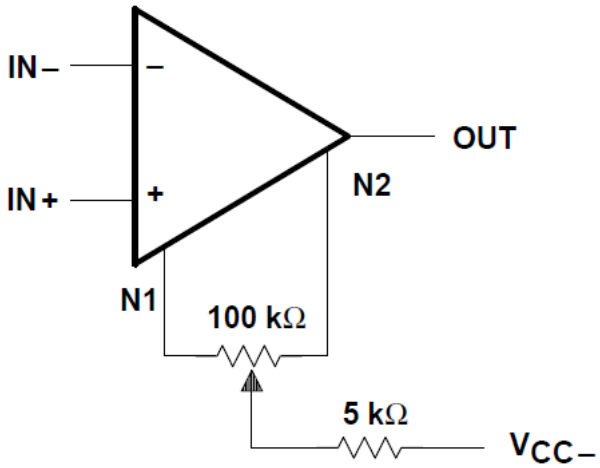

Figure 7-2. Input Offset Voltage Nulling

Copyright © 2026 Texas Instruments Incorporated

8 Device and Documentation Support

TI offers an extensive line of development tools. Tools and software to evaluate the performance of the device, generate code, and develop solutions are listed below.

8.1 Receiving Notification of Documentation Updates

To receive notification of documentation updates, navigate to the device product folder on ti.com. Click on *Notifications* to register and receive a weekly digest of any product information that has changed. For change details, review the revision history included in any revised document.

8.2 Support Resources

TI E2E™ support forums are an engineer's go-to source for fast, verified answers and design help — straight from the experts. Search existing answers or ask your own question to get the quick design help you need.

Linked content is provided "AS IS" by the respective contributors. They do not constitute TI specifications and do not necessarily reflect TI's views; see TI's Terms of Use.

8.3 Trademarks

TI E2E™ is a trademark of Texas Instruments.
All trademarks are the property of their respective owners.

8.4 Electrostatic Discharge Caution

This integrated circuit can be damaged by ESD. Texas Instruments recommends that all integrated circuits be handled with appropriate precautions. Failure to observe proper handling and installation procedures can cause damage.

ESD damage can range from subtle performance degradation to complete device failure. Precision integrated circuits may be more susceptible to damage because very small parametric changes could cause the device not to meet its published specifications.

8.5 Glossary

TI Glossary	This glossary lists and explains terms, acronyms, and definitions.

9 Revision History

NOTE: Page numbers for previous revisions may differ from page numbers in the current version.

Changes from Revision C (July 2025) to Revision D (March 2026) **Page**

- Updated Wide bandwidth from 2MHz to 1.1MHz GBW.....1
- Updated Low supply current from 290µA/Ch to 120µA/Ch.....1
- Updated Description as per latest die information.....1
- Removed Ceramic Flat Pack (U) column.....3
- Removed TSSOP (PW) column.....3
- Updated Supply voltages V_{CC+} and V_{CC-} to singleV_{CC+} −(V_{CC-}) with minimum value 0V and maximum value 38V.....6
- Removed Differential input voltage range minimum value of −38V 6
- Updated Differential input voltage range maximum value from 38V to V_{CC} +0.2V.....6
- Removed Output current specification.....6
- Removed Total current into and Total current out of specification.....6
- Updated Duration of short-circuit current at (or below) 25°C to Continous.....6
- Removed all references to D, P and PW package in Lead temperature 1,6 mm (1/16 inch) from case for 10 seconds.....6
- Removed Input offset voltage long-term drift parameter in all *Electrical Characteristics* tables.....7
- Updated Input capacitance parameter in all *Electrical Characteristics* tables excluding M suffix tables.....7
- Updated Input offset current at 25°C from 1pA to ±5pA in all 5V *Electrical Characteristics* tables excluding M suffix tables.....7
- Updated Input bias current at 25°C from 3pA to ±10pA in all 5V *Electrical Characteristics* tables excluding M suffix tables.....7
- Updated Open-loop output impedance from 280Ω to 575Ω in all 5V *Electrical Characteristics* tables excluding M suffix tables.....7
- Removed Equivalent input noise voltage maximum values in all *Operating Characteristics* tables.....8
- Removed Unity-gain bandwidth parameter all *Operating Characteristics* tables excluding M suffix table.....8
- Updated Phase margin at unity gain for R_L=10kΩ to 46° in all *Operating Characteristics* tables excluding M suffix table.....8
- Removed Phase margin at unity gain for R_L=100Ω *Operating Characteristics* tables excluding M suffix table. 8
- Updated Input offset current at 25°C from 2pA to ±5pA in all 15V *Electrical Characteristics* tables excluding M suffix tables.....9
- Updated Input bias current at 25°C from 4pA to ±10pA in all 15V *Electrical Characteristics* tables excluding M suffix tables.....9
- Removed all Y suffix tables.....9
- Removed figure 5-6, 5-9, 5-10, 5-11, 5-12, 5-13, 5-14, 5-15, 5-16,5-17,5-18,5-19,5-20,5-22,5-23,5-24,5-25,5-26,5-27,5-28,5-35,5-36,5-38,5-39,5-40..... 40
- Added Offset Voltage vs Common-Mode Voltage plot..... 40
- Added Open-Loop Gain and Phase vs Frequency plot.....40
- Added Phase Margin vs Capacitive Load plot.....40

Changes from Revision B (May 2004) to Revision C (July 2025) **Page**

- Added *Applications* section..... 1
- Updated typical offset to 0.1mV all test conditions and supply voltages..... 7
- Updated typical offset drift to 1µV/°C across all test conditions and supply voltages..... 7
- Updated typical open-loop gain to 225V/mV across all test conditions and supply voltages..... 7
- Updated typical quiescent current across all test conditions and supply voltages..... 7
- Updated typical output swing across all test conditions and supply voltages.....7
- Updated typical slew rate to 4V/µs across all test conditions and supply voltages..... 7

Copyright © 2026 Texas Instruments Incorporated

10 Mechanical, Packaging, and Orderable Information

The following pages include mechanical, packaging, and orderable information. This information is the most current data available for the designated devices. This data is subject to change without notice and revision of this document. For browser-based versions of this data sheet, refer to the left-hand navigation.

PACKAGING INFORMATION

Orderable part number	Status (1)	Material type (2)	Package | Pins	Package qty | Carrier	RoHS (3)	Lead finish/ Ball material (4)	MSL rating/ Peak reflow (5)	Op temp (°C)	Part marking (6)
5962-9080701M2A	Active	Production	LCCC (FK) | 20	55 | TUBE	No	SNPB	N/A for Pkg Type	-55 to 125	5962-9080701M2A TLE2061MFKB
5962-9080701MPA	Active	Production	CDIP (JG) | 8	50 | TUBE	No	SNPB	N/A for Pkg Type	-55 to 125	9080701MPA TLE2061M
5962-9080702Q2A	Active	Production	LCCC (FK) | 20	55 | TUBE	No	SNPB	N/A for Pkg Type	-55 to 125	5962-9080702Q2A TLE2061 AMFKB
5962-9080702QPA	Active	Production	CDIP (JG) | 8	50 | TUBE	No	SNPB	N/A for Pkg Type	-55 to 125	9080702QPA TLE2061AM
5962-9080703QPA	Active	Production	CDIP (JG) | 8	50 | TUBE	No	SNPB	N/A for Pkg Type	-55 to 125	9080703QPA TLE2061BM
5962-9080801MPA	Active	Production	CDIP (JG) | 8	50 | TUBE	No	SNPB	N/A for Pkg Type	-55 to 125	9080801MPA TLE2062M
5962-9080803QPA	Active	Production	CDIP (JG) | 8	50 | TUBE	No	SNPB	N/A for Pkg Type	-55 to 125	9080803QPA TLE2062BM
5962-9080901M2A	Active	Production	LCCC (FK) | 20	55 | TUBE	No	SNPB	N/A for Pkg Type	-55 to 125	5962-9080901M2A TLE2064 MFKB
5962-9080901MCA	Active	Production	CDIP (J) | 14	25 | TUBE	No	SNPB	N/A for Pkg Type	-55 to 125	5962-9080901MC A TLE2064MJB
5962-9080902M2A	Active	Production	LCCC (FK) | 20	55 | TUBE	No	SNPB	N/A for Pkg Type	-55 to 125	5962-9080902M2A TLE2064A MFKB
5962-9080902MDA	Active	Production	CFP (W) | 14	25 | TUBE	No	SNPB	N/A for Pkg Type	-55 to 125	5962-9080902MD A TLE2064AMWB
5962-9080903Q2A	Active	Production	LCCC (FK) | 20	55 | TUBE	No	SNPB	N/A for Pkg Type	-55 to 125	5962-9080903Q2A TLE2064 BMFKB

Orderable part number	Status (1)	Material type (2)	Package | Pins	Package qty | Carrier	RoHS (3)	Lead finish/ Ball material (4)	MSL rating/ Peak reflow (5)	Op temp (°C)	Part marking (6)
5962-9080903QCA	Active	Production	CDIP (J) | 14	25 | TUBE	No	SNPB	N/A for Pkg Type	-55 to 125	5962-9080903QCA TLE2064BMJB
TLE2061ACD	Obsolete	Production	SOIC (D) | 8	-	-	Call TI	Call TI	0 to 70	2061AC
TLE2061ACP	Active	Production	PDIP (P) | 8	50 | TUBE	Yes	NIPDAU	N/A for Pkg Type	0 to 70	TLE2061AC
TLE2061ACP.A	Active	Production	PDIP (P) | 8	50 | TUBE	Yes	NIPDAU	N/A for Pkg Type	0 to 70	TLE2061AC
TLE2061ACPE4	Active	Production	PDIP (P) | 8	50 | TUBE	-	Call TI	Call TI	0 to 70	
TLE2061AID	Obsolete	Production	SOIC (D) | 8	-	-	Call TI	Call TI	-40 to 85	2061AI
TLE2061AIP	Active	Production	PDIP (P) | 8	50 | TUBE	Yes	NIPDAU	N/A for Pkg Type	-40 to 85	TLE2061AI
TLE2061AIP.A	Active	Production	PDIP (P) | 8	50 | TUBE	Yes	NIPDAU	N/A for Pkg Type	-40 to 85	TLE2061AI
TLE2061AMFKB	Active	Production	LCCC (FK) | 20	55 | TUBE	No	SNPB	N/A for Pkg Type	-55 to 125	5962-9080702Q2A TLE2061 AMFKB
TLE2061AMFKB.A	Active	Production	LCCC (FK) | 20	55 | TUBE	No	SNPB	N/A for Pkg Type	-55 to 125	5962-9080702Q2A TLE2061 AMFKB
TLE2061AMJGB	Active	Production	CDIP (JG) | 8	50 | TUBE	No	SNPB	N/A for Pkg Type	-55 to 125	9080702QPA TLE2061AM
TLE2061AMJGB.A	Active	Production	CDIP (JG) | 8	50 | TUBE	No	SNPB	N/A for Pkg Type	-55 to 125	9080702QPA TLE2061AM
TLE2061BMJGB	Active	Production	CDIP (JG) | 8	50 | TUBE	No	SNPB	N/A for Pkg Type	-55 to 125	9080703QPA TLE2061BM
TLE2061BMJGB.A	Active	Production	CDIP (JG) | 8	50 | TUBE	No	SNPB	N/A for Pkg Type	-55 to 125	9080703QPA TLE2061BM
TLE2061CD	Obsolete	Production	SOIC (D) | 8	-	-	Call TI	Call TI	0 to 70	2061C
TLE2061CDR	Active	Production	SOIC (D) | 8	2500 | LARGE T&R	Yes	NIPDAU	Level-1-260C-UNLIM	0 to 70	2061C
TLE2061CDR.A	Active	Production	SOIC (D) | 8	2500 | LARGE T&R	Yes	NIPDAU	Level-1-260C-UNLIM	0 to 70	2061C
TLE2061CDRG4	Active	Production	SOIC (D) | 8	2500 | LARGE T&R	-	Call TI	Call TI	0 to 70	
TLE2061CP	Active	Production	PDIP (P) | 8	50 | TUBE	Yes	NIPDAU	N/A for Pkg Type	0 to 70	TLE2061CP
TLE2061CP.A	Active	Production	PDIP (P) | 8	50 | TUBE	Yes	NIPDAU	N/A for Pkg Type	0 to 70	TLE2061CP
TLE2061ID	Obsolete	Production	SOIC (D) | 8	-	-	Call TI	Call TI	-40 to 85	2061I
TLE2061IDR	Active	Production	SOIC (D) | 8	2500 | LARGE T&R	Yes	NIPDAU	Level-1-260C-UNLIM	-40 to 85	2061I

Orderable part number	Status (1)	Material type (2)	Package | Pins	Package qty | Carrier	RoHS (3)	Lead finish/ Ball material (4)	MSL rating/ Peak reflow (5)	Op temp (°C)	Part marking (6)
TLE2061IDR.A	Active	Production	SOIC (D) | 8	2500 | LARGE T&R	Yes	NIPDAU	Level-1-260C-UNLIM	-40 to 85	2061I
TLE2061IP	Active	Production	PDIP (P) | 8	50 | TUBE	Yes	NIPDAU	N/A for Pkg Type	-40 to 85	TLE2061IP
TLE2061IP.A	Active	Production	PDIP (P) | 8	50 | TUBE	Yes	NIPDAU	N/A for Pkg Type	-40 to 85	TLE2061IP
TLE2061MD	Obsolete	Production	SOIC (D) | 8	-	-	Call TI	Call TI	-55 to 125	
TLE2061MDG4	Obsolete	Production	SOIC (D) | 8	-	-	Call TI	Call TI	-55 to 125	
TLE2061MFKB	Active	Production	LCCC (FK) | 20	55 | TUBE	No	SNPB	N/A for Pkg Type	-55 to 125	5962-9080701M2A TLE2061MFKB
TLE2061MFKB.A	Active	Production	LCCC (FK) | 20	55 | TUBE	No	SNPB	N/A for Pkg Type	-55 to 125	5962-9080701M2A TLE2061MFKB
TLE2061MJGB	Active	Production	CDIP (JG) | 8	50 | TUBE	No	SNPB	N/A for Pkg Type	-55 to 125	9080701MPA TLE2061M
TLE2061MJGB.A	Active	Production	CDIP (JG) | 8	50 | TUBE	No	SNPB	N/A for Pkg Type	-55 to 125	9080701MPA TLE2061M
TLE2062ACD	Obsolete	Production	SOIC (D) | 8	-	-	Call TI	Call TI	0 to 70	2062AC
TLE2062ACDR	Active	Production	SOIC (D) | 8	2500 | LARGE T&R	Yes	NIPDAU	Level-1-260C-UNLIM	0 to 70	2062AC
TLE2062ACDR.A	Active	Production	SOIC (D) | 8	2500 | LARGE T&R	Yes	NIPDAU	Level-1-260C-UNLIM	0 to 70	2062AC
TLE2062ACDRG4	Active	Production	SOIC (D) | 8	2500 | LARGE T&R	Yes	NIPDAU	Level-1-260C-UNLIM	-40 to 85	2062AC
TLE2062ACDRG4.A	Active	Production	SOIC (D) | 8	2500 | LARGE T&R	Yes	NIPDAU	Level-1-260C-UNLIM	-40 to 85	2062AC
TLE2062AID	Obsolete	Production	SOIC (D) | 8	-	-	Call TI	Call TI	-40 to 85	2062AI
TLE2062AIDR	Active	Production	SOIC (D) | 8	2500 | LARGE T&R	Yes	NIPDAU	Level-1-260C-UNLIM	-40 to 85	2062AI
TLE2062AIDR.A	Active	Production	SOIC (D) | 8	2500 | LARGE T&R	Yes	NIPDAU	Level-1-260C-UNLIM	-40 to 85	2062AI
TLE2062AMDR	Active	Production	SOIC (D) | 8	2500 | LARGE T&R	Yes	NIPDAU	Level-1-260C-UNLIM	-55 to 125	2062AM
TLE2062AMDR.A	Active	Production	SOIC (D) | 8	2500 | LARGE T&R	Yes	NIPDAU	Level-1-260C-UNLIM	-55 to 125	2062AM
TLE2062AMJG	Active	Production	CDIP (JG) | 8	50 | TUBE	No	SNPB	N/A for Pkg Type	-55 to 125	TLE2062 AMJG
TLE2062AMJG.A	Active	Production	CDIP (JG) | 8	50 | TUBE	No	SNPB	N/A for Pkg Type	-55 to 125	TLE2062 AMJG
TLE2062BMJG	Active	Production	CDIP (JG) | 8	50 | TUBE	No	SNPB	N/A for Pkg Type	-55 to 125	TLE2062 BMJG
TLE2062BMJG.A	Active	Production	CDIP (JG) | 8	50 | TUBE	No	SNPB	N/A for Pkg Type	-55 to 125	TLE2062 BMJG

Orderable part number	Status (1)	Material type (2)	Package | Pins	Package qty | Carrier	RoHS (3)	Lead finish/ Ball material (4)	MSL rating/ Peak reflow (5)	Op temp (°C)	Part marking (6)
TLE2062BMJGB	Active	Production	CDIP (JG) | 8	50 | TUBE	No	SNPB	N/A for Pkg Type	-55 to 125	9080803QPA TLE2062BM
TLE2062BMJGB.A	Active	Production	CDIP (JG) | 8	50 | TUBE	No	SNPB	N/A for Pkg Type	-55 to 125	9080803QPA TLE2062BM
TLE2062CD	Obsolete	Production	SOIC (D) | 8	-	-	Call TI	Call TI	0 to 70	2062C
TLE2062CDR	Active	Production	SOIC (D) | 8	2500 | LARGE T&R	Yes	NIPDAU	Level-1-260C-UNLIM	0 to 70	2062C
TLE2062CDR.A	Active	Production	SOIC (D) | 8	2500 | LARGE T&R	Yes	NIPDAU	Level-1-260C-UNLIM	0 to 70	2062C
TLE2062CDRG4	Active	Production	SOIC (D) | 8	2500 | LARGE T&R	-	Call TI	Call TI	0 to 70	
TLE2062CP	Active	Production	PDIP (P) | 8	50 | TUBE	Yes	NIPDAU	N/A for Pkg Type	0 to 70	TLE2062CP
TLE2062CP.A	Active	Production	PDIP (P) | 8	50 | TUBE	Yes	NIPDAU	N/A for Pkg Type	0 to 70	TLE2062CP
TLE2062ID	Obsolete	Production	SOIC (D) | 8	-	-	Call TI	Call TI	-40 to 85	2062I
TLE2062IDR	Active	Production	SOIC (D) | 8	2500 | LARGE T&R	Yes	NIPDAU	Level-1-260C-UNLIM	-40 to 85	2062I
TLE2062IDR.A	Active	Production	SOIC (D) | 8	2500 | LARGE T&R	Yes	NIPDAU	Level-1-260C-UNLIM	-40 to 85	2062I
TLE2062IDRG4	Active	Production	SOIC (D) | 8	2500 | LARGE T&R	Yes	NIPDAU	Level-1-260C-UNLIM	-40 to 85	2062I
TLE2062IDRG4.A	Active	Production	SOIC (D) | 8	2500 | LARGE T&R	Yes	NIPDAU	Level-1-260C-UNLIM	-40 to 85	2062I
TLE2062IP	Active	Production	PDIP (P) | 8	50 | TUBE	Yes	NIPDAU	N/A for Pkg Type	-40 to 85	TLE2062IP
TLE2062IP.A	Active	Production	PDIP (P) | 8	50 | TUBE	Yes	NIPDAU	N/A for Pkg Type	-40 to 85	TLE2062IP
TLE2062MFKB	Obsolete	Production	LCCC (FK) | 20	-	-	Call TI	Call TI	-	5962-9080801M2A TLE2062MFKB
TLE2062MJG	Active	Production	CDIP (JG) | 8	50 | TUBE	No	SNPB	N/A for Pkg Type	-55 to 125	TLE2062MJG
TLE2062MJG.A	Active	Production	CDIP (JG) | 8	50 | TUBE	No	SNPB	N/A for Pkg Type	-55 to 125	TLE2062MJG
TLE2062MJGB	Active	Production	CDIP (JG) | 8	50 | TUBE	No	SNPB	N/A for Pkg Type	-55 to 125	9080801MPA TLE2062M
TLE2062MJGB.A	Active	Production	CDIP (JG) | 8	50 | TUBE	No	SNPB	N/A for Pkg Type	-55 to 125	9080801MPA TLE2062M
TLE2064ACD	Obsolete	Production	SOIC (D) | 14	-	-	Call TI	Call TI	0 to 70	2064AC
TLE2064ACDR	Active	Production	SOIC (D) | 14	2500 | LARGE T&R	Yes	NIPDAU	Level-1-260C-UNLIM	-40 to 85	2064AC
TLE2064ACDR.A	Active	Production	SOIC (D) | 14	2500 | LARGE T&R	Yes	NIPDAU	Level-1-260C-UNLIM	-40 to 85	2064AC
TLE2064ACN	Active	Production	PDIP (N) | 14	25 | TUBE	Yes	NIPDAU	N/A for Pkg Type	-40 to 85	TLE2064ACN
TLE2064ACN.A	Active	Production	PDIP (N) | 14	25 | TUBE	Yes	NIPDAU	N/A for Pkg Type	-40 to 85	TLE2064ACN
TLE2064AID	Obsolete	Production	SOIC (D) | 14	-	-	Call TI	Call TI	-40 to 85	2064AI

Orderable part number	Status (1)	Material type (2)	Package | Pins	Package qty | Carrier	RoHS (3)	Lead finish/ Ball material (4)	MSL rating/ Peak reflow (5)	Op temp (°C)	Part marking (6)
TLE2064AIDR	Active	Production	SOIC (D) | 14	2500 | LARGE T&R	Yes	NIPDAU	Level-1-260C-UNLIM	-40 to 85	2064AI
TLE2064AIDR.A	Active	Production	SOIC (D) | 14	2500 | LARGE T&R	Yes	NIPDAU	Level-1-260C-UNLIM	-40 to 85	2064AI
TLE2064AIDRG4	Active	Production	SOIC (D) | 14	2500 | LARGE T&R	Yes	NIPDAU	Level-1-260C-UNLIM	-40 to 85	2064AI
TLE2064AIDRG4.A	Active	Production	SOIC (D) | 14	2500 | LARGE T&R	Yes	NIPDAU	Level-1-260C-UNLIM	-40 to 85	2064AI
TLE2064AMD	Obsolete	Production	SOIC (D) | 14	-	-	Call TI	Call TI	-55 to 125	
TLE2064AMDG4	Obsolete	Production	SOIC (D) | 14	-	-	Call TI	Call TI	-	
TLE2064AMDR	Active	Production	SOIC (D) | 14	2500 | LARGE T&R	Yes	NIPDAU	Level-1-260C-UNLIM	-55 to 125	2064AM
TLE2064AMDR.A	Active	Production	SOIC (D) | 14	2500 | LARGE T&R	Yes	NIPDAU	Level-1-260C-UNLIM	-55 to 125	2064AM
TLE2064AMDRG4	Obsolete	Production	SOIC (D) | 14	-	-	Call TI	Call TI	-	
TLE2064AMFKB	Active	Production	LCCC (FK) | 20	55 | TUBE	No	SNPB	N/A for Pkg Type	-55 to 125	5962-9080902M2A TLE2064A MFKB
TLE2064AMFKB.A	Active	Production	LCCC (FK) | 20	55 | TUBE	No	SNPB	N/A for Pkg Type	-55 to 125	5962-9080902M2A TLE2064A MFKB
TLE2064AMJ	Active	Production	CDIP (J) | 14	25 | TUBE	No	SNPB	N/A for Pkg Type	-55 to 125	TLE2064AMJ
TLE2064AMJ.A	Active	Production	CDIP (J) | 14	25 | TUBE	No	SNPB	N/A for Pkg Type	-55 to 125	TLE2064AMJ
TLE2064AMWB	Active	Production	CFP (W) | 14	25 | TUBE	No	SNPB	N/A for Pkg Type	-55 to 125	5962-9080902MDA TLE2064AMWB
TLE2064AMWB.A	Active	Production	CFP (W) | 14	25 | TUBE	No	SNPB	N/A for Pkg Type	-55 to 125	5962-9080902MDA TLE2064AMWB
TLE2064BMFKB	Active	Production	LCCC (FK) | 20	55 | TUBE	No	SNPB	N/A for Pkg Type	-55 to 125	5962-9080903Q2A TLE2064 BMFKB
TLE2064BMFKB.A	Active	Production	LCCC (FK) | 20	55 | TUBE	No	SNPB	N/A for Pkg Type	-55 to 125	5962-9080903Q2A TLE2064 BMFKB
TLE2064BMJ	Active	Production	CDIP (J) | 14	25 | TUBE	No	SNPB	N/A for Pkg Type	-55 to 125	TLE2064BMJ
TLE2064BMJ.A	Active	Production	CDIP (J) | 14	25 | TUBE	No	SNPB	N/A for Pkg Type	-55 to 125	TLE2064BMJ

Orderable part number	Status (1)	Material type (2)	Package | Pins	Package qty | Carrier	RoHS (3)	Lead finish/ Ball material (4)	MSL rating/ Peak reflow (5)	Op temp (°C)	Part marking (6)
TLE2064BMJB	Active	Production	CDIP (J) | 14	25 | TUBE	No	SNPB	N/A for Pkg Type	-55 to 125	5962-9080903QCA TLE2064BMJB
TLE2064BMJB.A	Active	Production	CDIP (J) | 14	25 | TUBE	No	SNPB	N/A for Pkg Type	-55 to 125	5962-9080903QCA TLE2064BMJB
TLE2064CD	Obsolete	Production	SOIC (D) | 14	-	-	Call TI	Call TI	0 to 70	TLE2064C
TLE2064CDR	Active	Production	SOIC (D) | 14	2500 | LARGE T&R	Yes	NIPDAU	Level-1-260C-UNLIM	0 to 70	TLE2064C
TLE2064CDR.A	Active	Production	SOIC (D) | 14	2500 | LARGE T&R	Yes	NIPDAU	Level-1-260C-UNLIM	0 to 70	TLE2064C
TLE2064CDRG4	Active	Production	SOIC (D) | 14	2500 | LARGE T&R	-	Call TI	Call TI	0 to 70	
TLE2064CN	Active	Production	PDIP (N) | 14	25 | TUBE	Yes	NIPDAU	N/A for Pkg Type	0 to 70	TLE2064CN
TLE2064CN.A	Active	Production	PDIP (N) | 14	25 | TUBE	Yes	NIPDAU	N/A for Pkg Type	0 to 70	TLE2064CN
TLE2064CNE4	Active	Production	PDIP (N) | 14	25 | TUBE	-	Call TI	Call TI	0 to 70	
TLE2064ID	Obsolete	Production	SOIC (D) | 14	-	-	Call TI	Call TI	-40 to 85	TLE2064I
TLE2064IDR	Active	Production	SOIC (D) | 14	2500 | LARGE T&R	Yes	NIPDAU	Level-1-260C-UNLIM	-40 to 85	TLE2064I
TLE2064IDR.A	Active	Production	SOIC (D) | 14	2500 | LARGE T&R	Yes	NIPDAU	Level-1-260C-UNLIM	-40 to 85	TLE2064I
TLE2064IN	Active	Production	PDIP (N) | 14	25 | TUBE	Yes	NIPDAU	N/A for Pkg Type	-40 to 85	TLE2064IN
TLE2064IN.A	Active	Production	PDIP (N) | 14	25 | TUBE	Yes	NIPDAU	N/A for Pkg Type	-40 to 85	TLE2064IN
TLE2064INE4	Active	Production	PDIP (N) | 14	25 | TUBE	-	Call TI	Call TI	-40 to 85	
TLE2064MD	Obsolete	Production	SOIC (D) | 14	-	-	Call TI	Call TI	-55 to 125	
TLE2064MDG4	Obsolete	Production	SOIC (D) | 14	-	-	Call TI	Call TI	-	
TLE2064MDR	Active	Production	SOIC (D) | 14	2500 | LARGE T&R	Yes	NIPDAU	Level-1-260C-UNLIM	-55 to 125	TLE2064M
TLE2064MDR.A	Active	Production	SOIC (D) | 14	2500 | LARGE T&R	Yes	NIPDAU	Level-1-260C-UNLIM	-55 to 125	TLE2064M
TLE2064MFKB	Active	Production	LCCC (FK) | 20	55 | TUBE	No	SNPB	N/A for Pkg Type	-55 to 125	5962-9080901M2A TLE2064 MFKB
TLE2064MFKB.A	Active	Production	LCCC (FK) | 20	55 | TUBE	No	SNPB	N/A for Pkg Type	-55 to 125	5962-9080901M2A TLE2064 MFKB
TLE2064MJ	Active	Production	CDIP (J) | 14	25 | TUBE	No	SNPB	N/A for Pkg Type	-55 to 125	TLE2064MJ
TLE2064MJ.A	Active	Production	CDIP (J) | 14	25 | TUBE	No	SNPB	N/A for Pkg Type	-55 to 125	TLE2064MJ

Orderable part number	Status (1)	Material type (2)	Package | Pins	Package qty | Carrier	RoHS (3)	Lead finish/ Ball material (4)	MSL rating/ Peak reflow (5)	Op temp (°C)	Part marking (6)
TLE2064MJB	Active	Production	CDIP (J) | 14	25 | TUBE	No	SNPB	N/A for Pkg Type	-55 to 125	5962-9080901MC A TLE2064MJB
TLE2064MJB.A	Active	Production	CDIP (J) | 14	25 | TUBE	No	SNPB	N/A for Pkg Type	-55 to 125	5962-9080901MC A TLE2064MJB

(1) **Status:** For more details on status, see our product life cycle.

(2) **Material type:** When designated, preproduction parts are prototypes/experimental devices, and are not yet approved or released for full production. Testing and final process, including without limitation quality assurance, reliability performance testing, and/or process qualification, may not yet be complete, and this item is subject to further changes or possible discontinuation. If available for ordering, purchases will be subject to an additional waiver at checkout, and are intended for early internal evaluation purposes only. These items are sold without warranties of any kind.

(3) **RoHS values:** Yes, No, RoHS Exempt. See the TI RoHS Statement for additional information and value definition.

(4) **Lead finish/Ball material:** Parts may have multiple material finish options. Finish options are separated by a vertical ruled line. Lead finish/Ball material values may wrap to two lines if the finish value exceeds the maximum column width.

(5) **MSL rating/Peak reflow:** The moisture sensitivity level ratings and peak solder (reflow) temperatures. In the event that a part has multiple moisture sensitivity ratings, only the lowest level per JEDEC standards is shown. Refer to the shipping label for the actual reflow temperature that will be used to mount the part to the printed circuit board.

(6) **Part marking:** There may be an additional marking, which relates to the logo, the lot trace code information, or the environmental category of the part.

Multiple part markings will be inside parentheses. Only one part marking contained in parentheses and separated by a "~" will appear on a part. If a line is indented then it is a continuation of the previous line and the two combined represent the entire part marking for that device.

Important Information and Disclaimer: The information provided on this page represents TI's knowledge and belief as of the date that it is provided. TI bases its knowledge and belief on information provided by third parties, and makes no representation or warranty as to the accuracy of such information. Efforts are underway to better integrate information from third parties. TI has taken and continues to take reasonable steps to provide representative and accurate information but may not have conducted destructive testing or chemical analysis on incoming materials and chemicals. TI and TI suppliers consider certain information to be proprietary, and thus CAS numbers and other limited information may not be available for release.

In no event shall TI's liability arising out of such information exceed the total purchase price of the TI part(s) at issue in this document sold by TI to Customer on an annual basis.

OTHER QUALIFIED VERSIONS OF TLE2061, TLE2061A, TLE2061AM, TLE2061M, TLE2062, TLE2062A, TLE2062AM, TLE2062M, TLE2064, TLE2064A, TLE2064AM, TLE2064M :

- Catalog : TLE2061A, TLE2061, TLE2062A, TLE2062, TLE2064A, TLE2064
- Military : TLE2061M, TLE2061AM, TLE2062M, TLE2062AM, TLE2064M, TLE2064AM

NOTE: Qualified Version Definitions:

- Catalog - TI's standard catalog product
- Military - QML certified for Military and Defense Applications

TAPE AND REEL INFORMATION

REEL DIMENSIONS

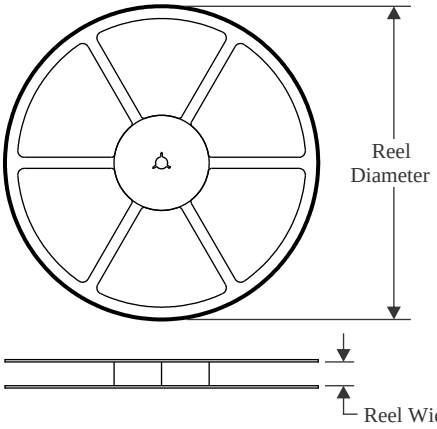

TAPE DIMENSIONS

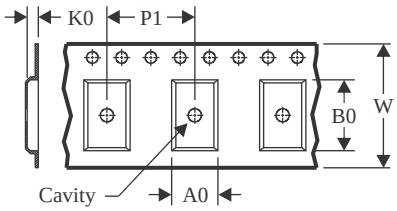

A0	Dimension designed to accommodate the component width
B0	Dimension designed to accommodate the component length
K0	Dimension designed to accommodate the component thickness
W	Overall width of the carrier tape
P1	Pitch between successive cavity centers

QUADRANT ASSIGNMENTS FOR PIN 1 ORIENTATION IN TAPE

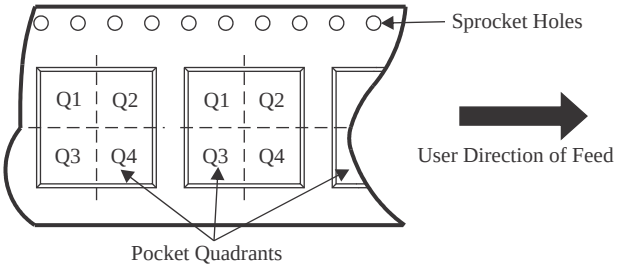

*All dimensions are nominal

Device	Package Type	Package Drawing	Pins	SPQ	Reel Diameter (mm)	Reel Width W1 (mm)	A0 (mm)	B0 (mm)	K0 (mm)	P1 (mm)	W (mm)	Pin1 Quadrant
TLE2061CDR	SOIC	D	8	2500	330.0	12.4	6.4	5.2	2.1	8.0	12.0	Q1
TLE2061IDR	SOIC	D	8	2500	330.0	12.4	6.4	5.2	2.1	8.0	12.0	Q1
TLE2062ACDR	SOIC	D	8	2500	330.0	12.4	6.4	5.2	2.1	8.0	12.0	Q1
TLE2062ACDRG4	SOIC	D	8	2500	330.0	12.4	6.4	5.2	2.1	8.0	12.0	Q1
TLE2062AIDR	SOIC	D	8	2500	330.0	12.4	6.4	5.2	2.1	8.0	12.0	Q1
TLE2062AMDR	SOIC	D	8	2500	330.0	12.4	6.4	5.2	2.1	8.0	12.0	Q1
TLE2062CDR	SOIC	D	8	2500	330.0	12.4	6.4	5.2	2.1	8.0	12.0	Q1
TLE2062IDR	SOIC	D	8	2500	330.0	12.4	6.4	5.2	2.1	8.0	12.0	Q1
TLE2062IDRG4	SOIC	D	8	2500	330.0	12.4	6.4	5.2	2.1	8.0	12.0	Q1
TLE2064ACDR	SOIC	D	14	2500	330.0	16.4	6.5	9.0	2.1	8.0	16.0	Q1
TLE2064AIDR	SOIC	D	14	2500	330.0	16.4	6.5	9.0	2.1	8.0	16.0	Q1
TLE2064AIDRG4	SOIC	D	14	2500	330.0	16.4	6.5	9.0	2.1	8.0	16.0	Q1
TLE2064AMDR	SOIC	D	14	2500	330.0	16.4	6.5	9.0	2.1	8.0	16.0	Q1
TLE2064CDR	SOIC	D	14	2500	330.0	16.4	6.5	9.0	2.1	8.0	16.0	Q1
TLE2064IDR	SOIC	D	14	2500	330.0	16.4	6.5	9.0	2.1	8.0	16.0	Q1
TLE2064MDR	SOIC	D	14	2500	330.0	16.4	6.5	9.0	2.1	8.0	16.0	Q1

TAPE AND REEL BOX DIMENSIONS

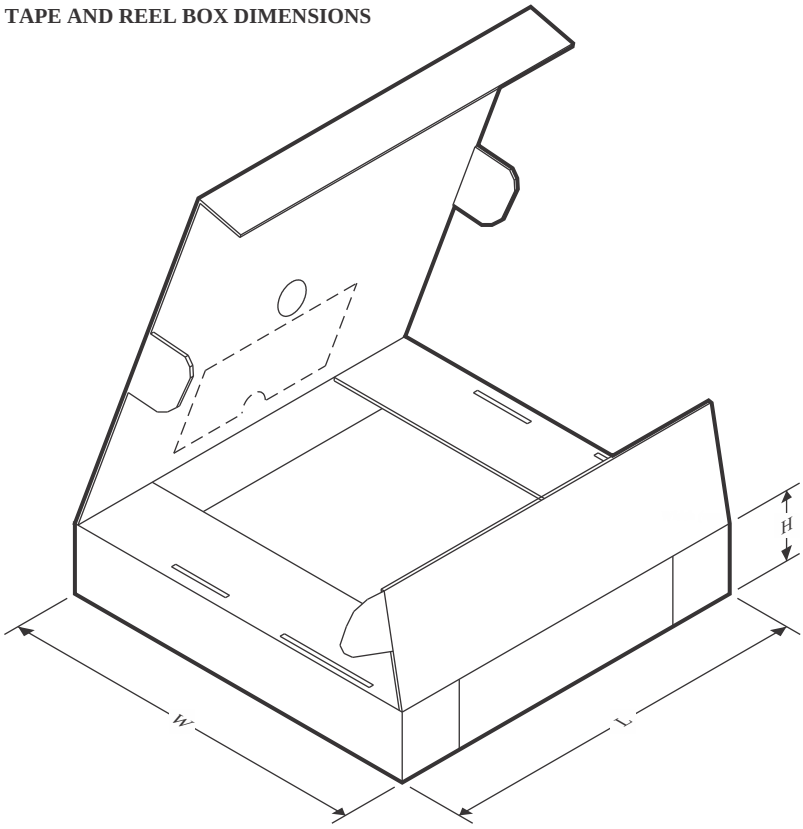

*All dimensions are nominal

Device	Package Type	Package Drawing	Pins	SPQ	Length (mm)	Width (mm)	Height (mm)
TLE2061CDR	SOIC	D	8	2500	353.0	353.0	32.0
TLE2061IDR	SOIC	D	8	2500	353.0	353.0	32.0
TLE2062ACDR	SOIC	D	8	2500	340.5	338.1	20.6
TLE2062ACDRG4	SOIC	D	8	2500	353.0	353.0	32.0
TLE2062AIDR	SOIC	D	8	2500	353.0	353.0	32.0
TLE2062AMDR	SOIC	D	8	2500	353.0	353.0	32.0
TLE2062CDR	SOIC	D	8	2500	353.0	353.0	32.0
TLE2062IDR	SOIC	D	8	2500	353.0	353.0	32.0
TLE2062IDRG4	SOIC	D	8	2500	353.0	353.0	32.0
TLE2064ACDR	SOIC	D	14	2500	353.0	353.0	32.0
TLE2064AIDR	SOIC	D	14	2500	353.0	353.0	32.0
TLE2064AIDRG4	SOIC	D	14	2500	353.0	353.0	32.0
TLE2064AMDR	SOIC	D	14	2500	353.0	353.0	32.0
TLE2064CDR	SOIC	D	14	2500	353.0	353.0	32.0
TLE2064IDR	SOIC	D	14	2500	353.0	353.0	32.0
TLE2064MDR	SOIC	D	14	2500	353.0	353.0	32.0

TUBE

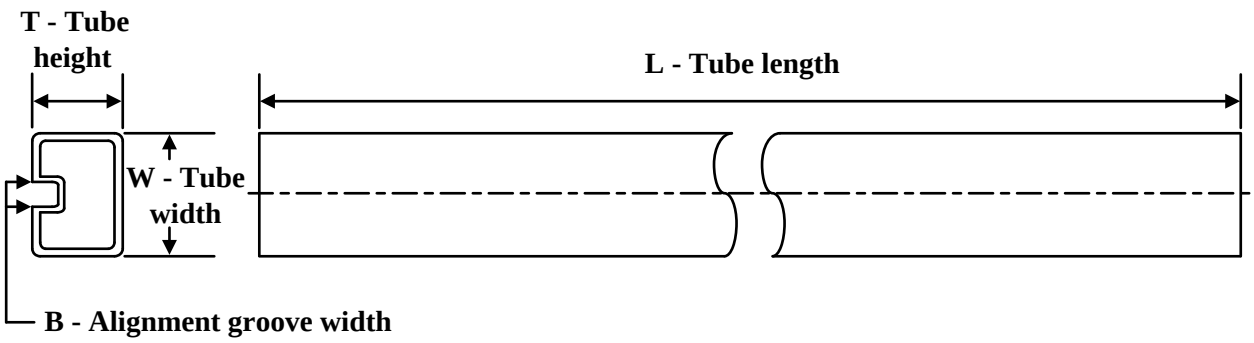

*All dimensions are nominal

Device	Package Name	Package Type	Pins	SPQ	L (mm)	W (mm)	T (µm)	B (mm)
5962-9080701M2A	FK	LCCC	20	55	506.98	12.06	2030	NA
5962-9080702Q2A	FK	LCCC	20	55	506.98	12.06	2030	NA
5962-9080901M2A	FK	LCCC	20	55	506.98	12.06	2030	NA
5962-9080902M2A	FK	LCCC	20	55	506.98	12.06	2030	NA
5962-9080902MDA	W	CFP	14	25	506.98	26.16	6220	NA
5962-9080903Q2A	FK	LCCC	20	55	506.98	12.06	2030	NA
TLE2061ACP	P	PDIP	8	50	506	13.97	11230	4.32
TLE2061ACP.A	P	PDIP	8	50	506	13.97	11230	4.32
TLE2061AIP	P	PDIP	8	50	506	13.97	11230	4.32
TLE2061AIP.A	P	PDIP	8	50	506	13.97	11230	4.32
TLE2061AMFKB	FK	LCCC	20	55	506.98	12.06	2030	NA
TLE2061AMFKB.A	FK	LCCC	20	55	506.98	12.06	2030	NA
TLE2061CP	P	PDIP	8	50	506	13.97	11230	4.32
TLE2061CP.A	P	PDIP	8	50	506	13.97	11230	4.32
TLE2061IP	P	PDIP	8	50	506	13.97	11230	4.32
TLE2061IP.A	P	PDIP	8	50	506	13.97	11230	4.32
TLE2061MFKB	FK	LCCC	20	55	506.98	12.06	2030	NA
TLE2061MFKB.A	FK	LCCC	20	55	506.98	12.06	2030	NA
TLE2062CP	P	PDIP	8	50	506	13.97	11230	4.32
TLE2062CP.A	P	PDIP	8	50	506	13.97	11230	4.32
TLE2062IP	P	PDIP	8	50	506	13.97	11230	4.32
TLE2062IP.A	P	PDIP	8	50	506	13.97	11230	4.32
TLE2064ACN	N	PDIP	14	25	506	13.97	11230	4.32
TLE2064ACN.A	N	PDIP	14	25	506	13.97	11230	4.32
TLE2064AMFKB	FK	LCCC	20	55	506.98	12.06	2030	NA
TLE2064AMFKB.A	FK	LCCC	20	55	506.98	12.06	2030	NA
TLE2064AMWB	W	CFP	14	25	506.98	26.16	6220	NA
TLE2064AMWB.A	W	CFP	14	25	506.98	26.16	6220	NA
TLE2064BMFKB	FK	LCCC	20	55	506.98	12.06	2030	NA

Device	Package Name	Package Type	Pins	SPQ	L (mm)	W (mm)	T (µm)	B (mm)
TLE2064BMFKB.A	FK	LCCC	20	55	506.98	12.06	2030	NA
TLE2064CN	N	PDIP	14	25	506	13.97	11230	4.32
TLE2064CN.A	N	PDIP	14	25	506	13.97	11230	4.32
TLE2064IN	N	PDIP	14	25	506	13.97	11230	4.32
TLE2064IN.A	N	PDIP	14	25	506	13.97	11230	4.32
TLE2064MFKB	FK	LCCC	20	55	506.98	12.06	2030	NA
TLE2064MFKB.A	FK	LCCC	20	55	506.98	12.06	2030	NA

JG0008A

CDIP - 5.08 mm max height

CERAMIC DUAL IN-LINE PACKAGE

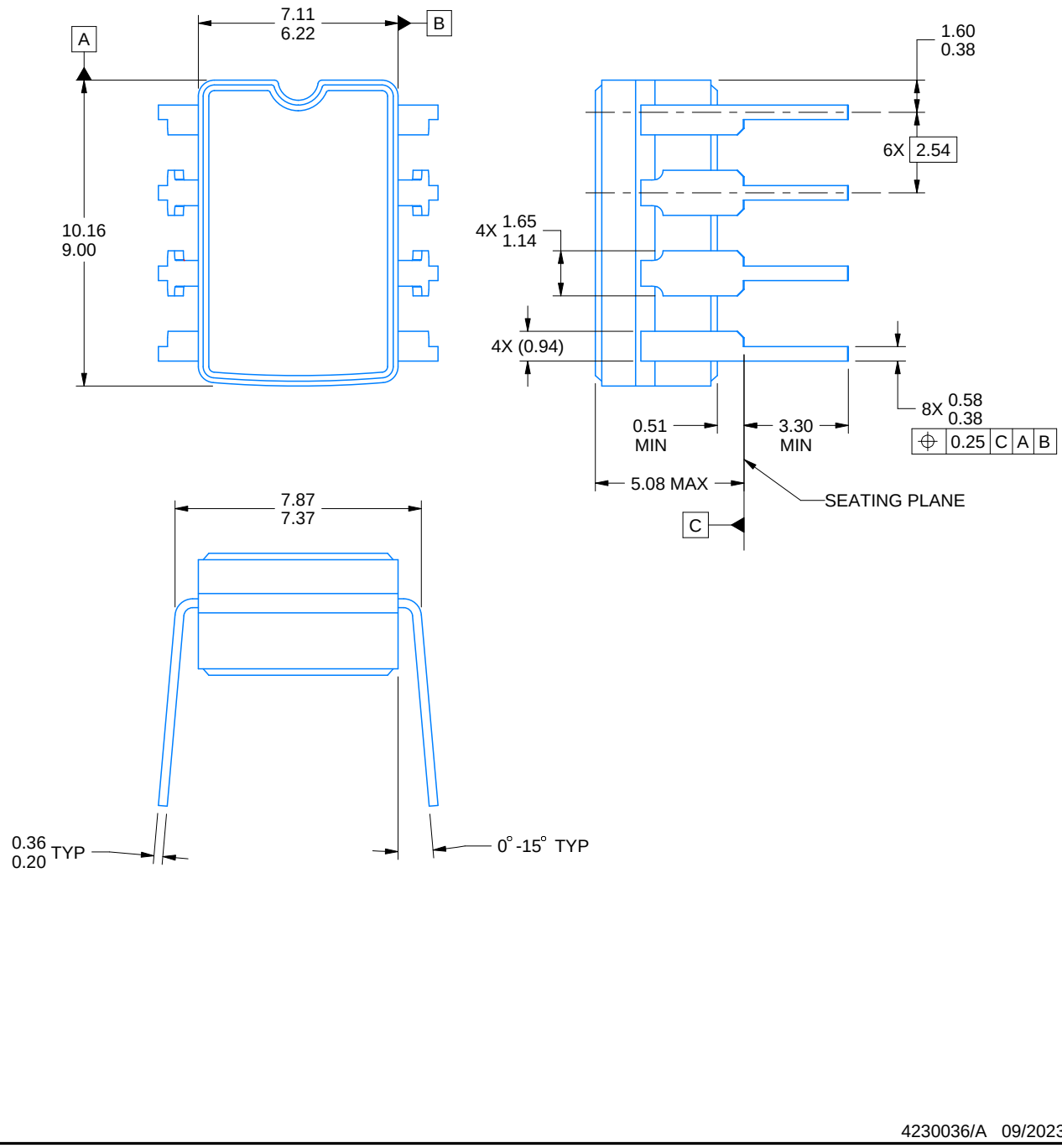

4230036/A 09/2023

NOTES:

1. All linear dimensions are in millimeters. Any dimensions in parenthesis are for reference only. Dimensioning and tolerancing per ASME Y14.5M.
2. This drawing is subject to change without notice.
3. This package can be hermetically sealed with a ceramic lid using glass frit.
4. Index point is provided on cap for terminal identification.
5. Falls within MIL STD 1835 GDIP1-T8

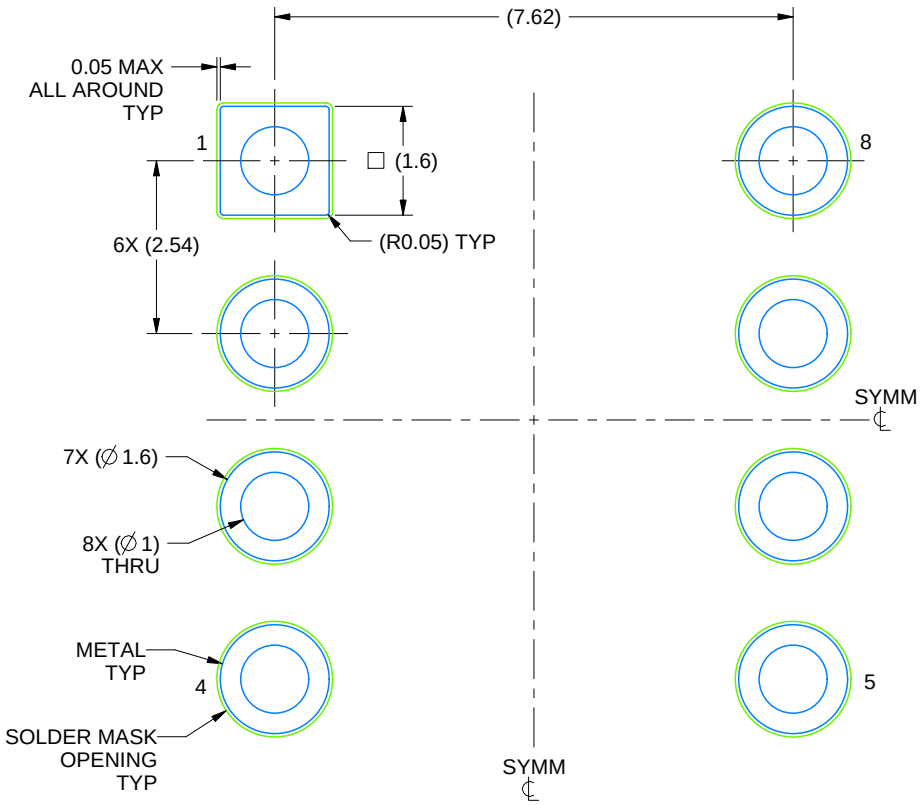

LAND PATTERN EXAMPLE
NON SOLDER MASK DEFINED
SCALE: 9X

4230036/A 09/2023

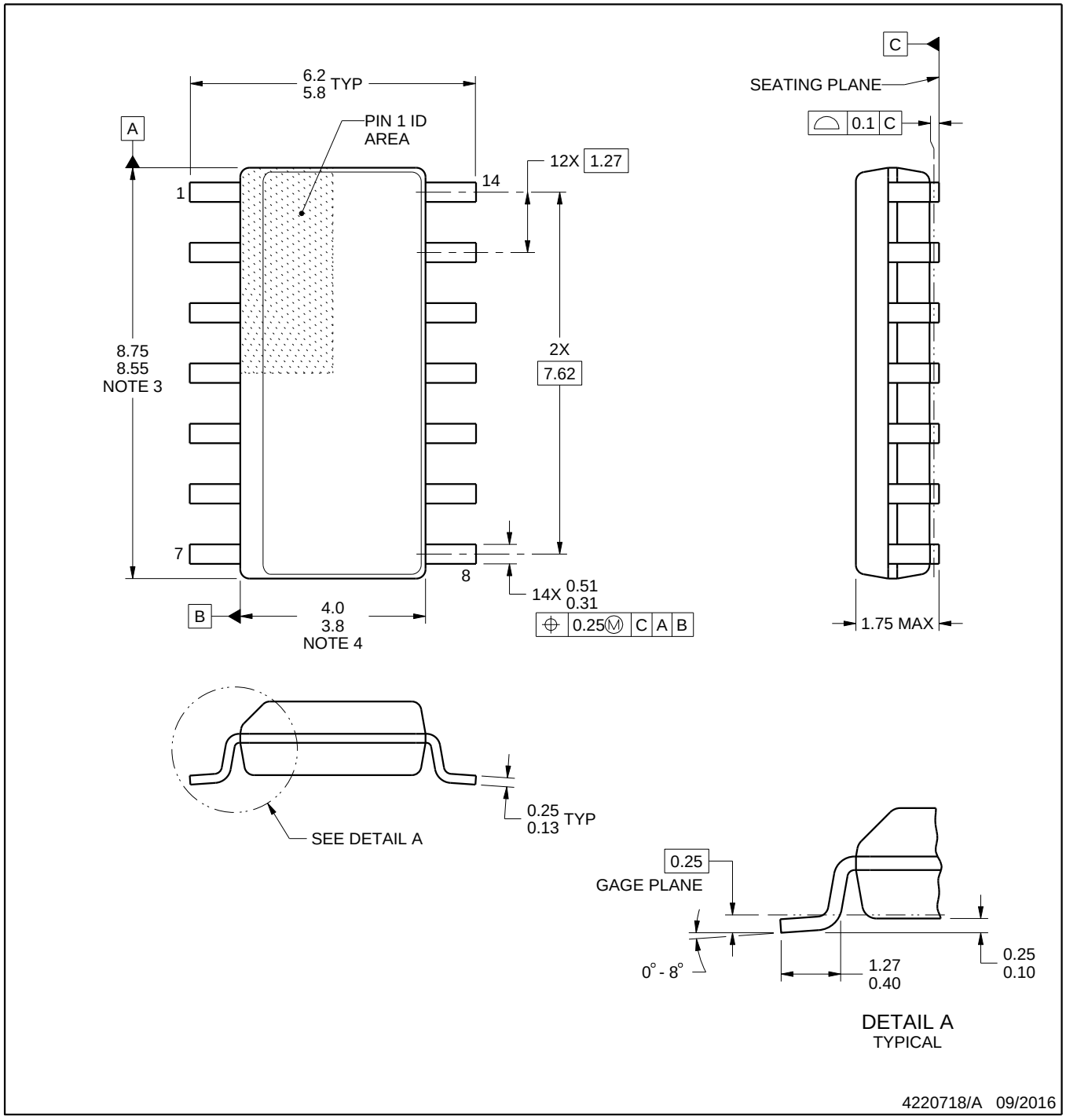

NOTES:

1. All linear dimensions are in millimeters. Dimensions in parenthesis are for reference only. Dimensioning and tolerancing per ASME Y14.5M.
2. This drawing is subject to change without notice.
3. This dimension does not include mold flash, protrusions, or gate burrs. Mold flash, protrusions, or gate burrs shall not exceed 0.15 mm, per side.
4. This dimension does not include interlead flash. Interlead flash shall not exceed 0.43 mm, per side.
5. Reference JEDEC registration MS-012, variation AB.

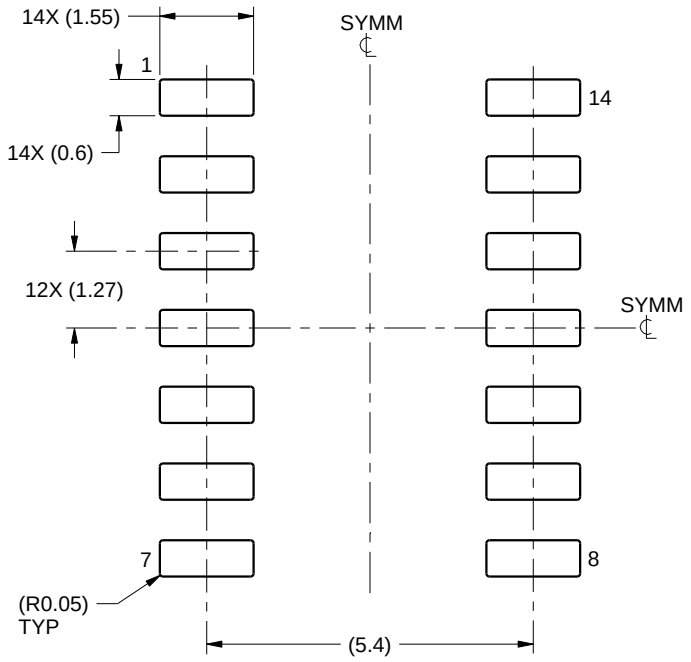

LAND PATTERN EXAMPLE
SCALE:8X

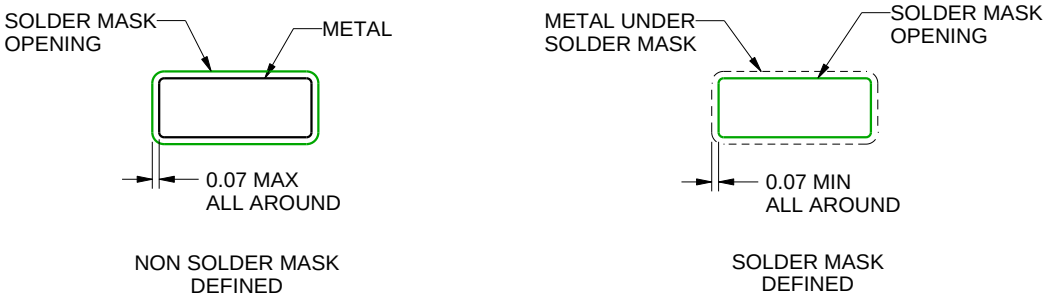

SOLDER MASK DETAILS

4220718/A 09/2016

NOTES: (continued)

6. Publication IPC-7351 may have alternate designs.
7. Solder mask tolerances between and around signal pads can vary based on board fabrication site.

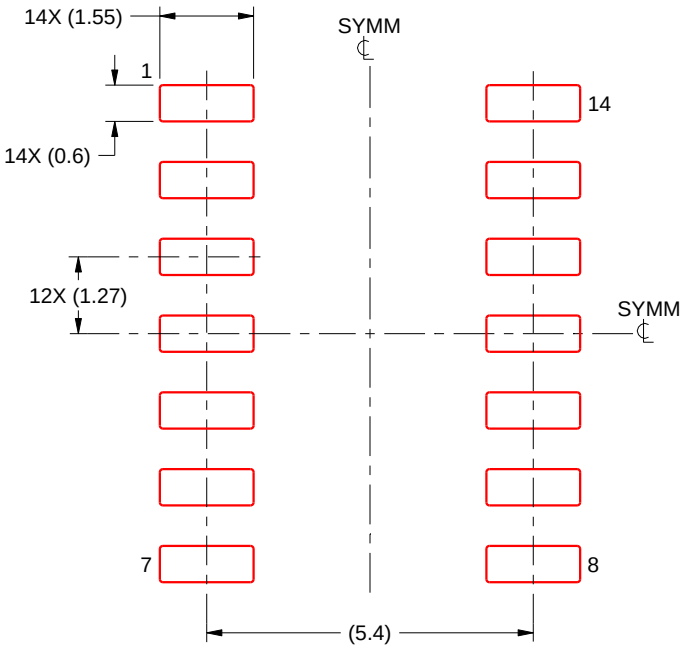

SOLDER PASTE EXAMPLE
BASED ON 0.125 mm THICK STENCIL
SCALE:8X

4220718/A 09/2016

NOTES: (continued)

8. Laser cutting apertures with trapezoidal walls and rounded corners may offer better paste release. IPC-7525 may have alternate design recommendations.
9. Board assembly site may have different recommendations for stencil design.

W (R–GDFP–F14) CERAMIC DUAL FLATPACK

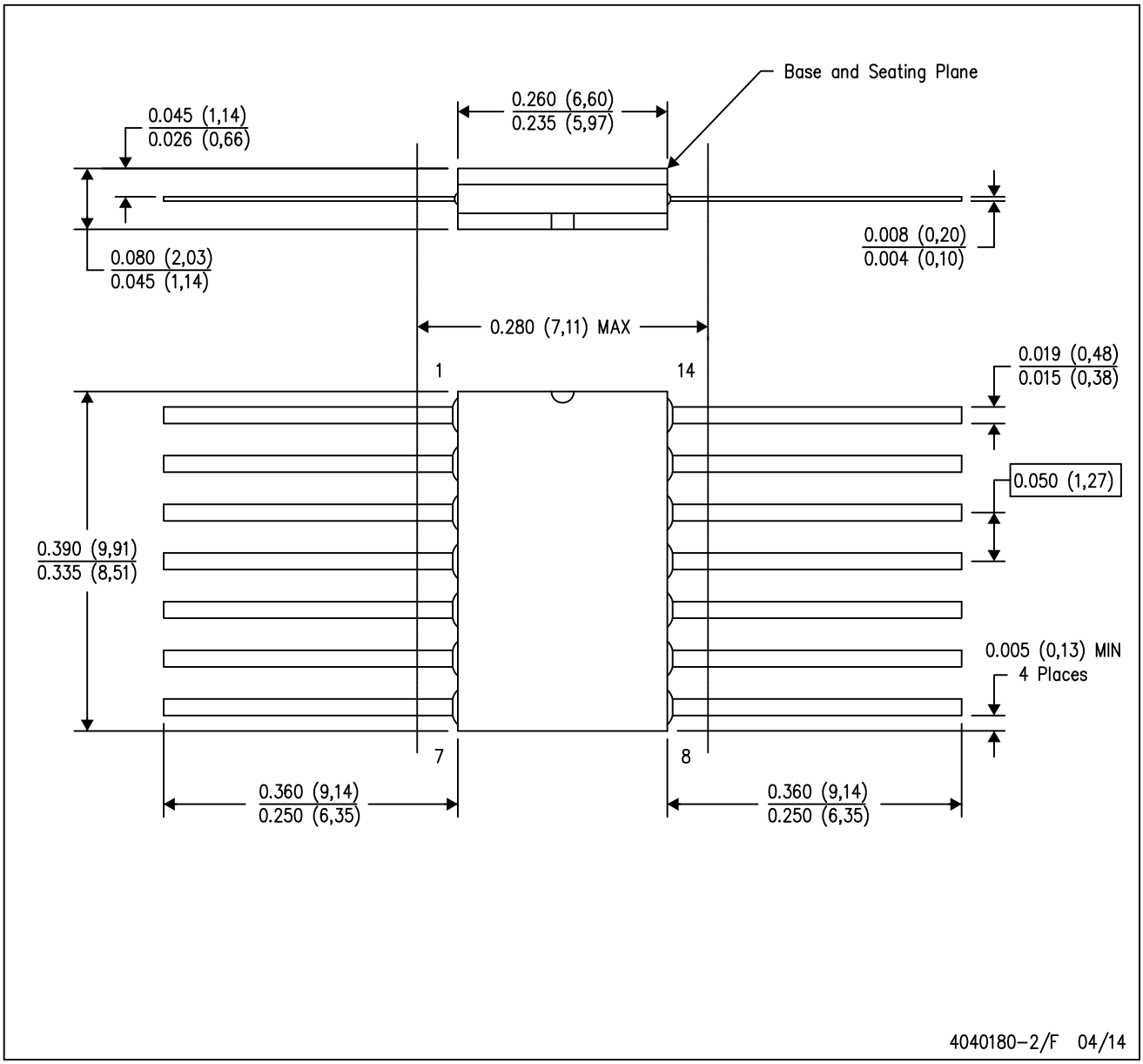

NOTES:
A. All linear dimensions are in inches (millimeters).
B. This drawing is subject to change without notice.
C. This package can be hermetically sealed with a ceramic lid using glass frit.
D. Index point is provided on cap for terminal identification only.
E. Falls within MIL STD 1835 GDFP1–F14

GENERIC PACKAGE VIEW

FK 20

LCCC - 2.03 mm max height

8.89 x 8.89, 1.27 mm pitch

LEADLESS CERAMIC CHIP CARRIER

This image is a representation of the package family, actual package may vary.
Refer to the product data sheet for package details.

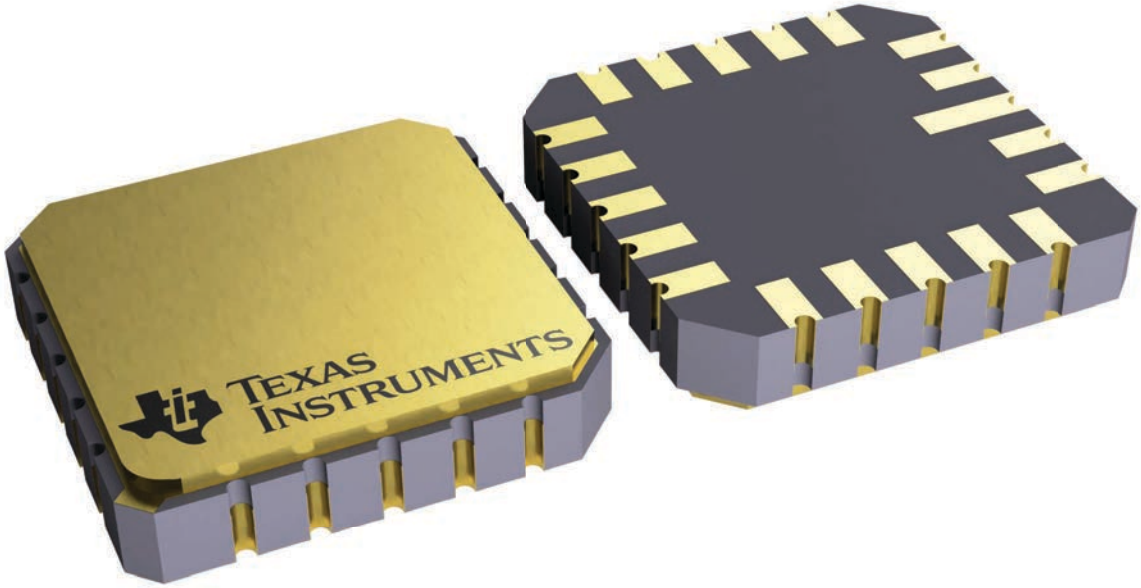

4229370VA\

J 14 CDIP - 5.08 mm max height

CERAMIC DUAL IN LINE PACKAGE

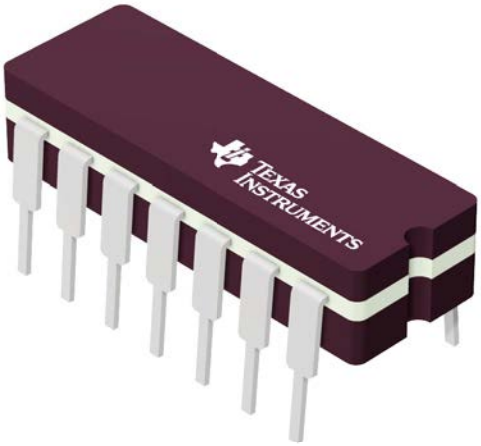

Images above are just a representation of the package family, actual package may vary.
Refer to the product data sheet for package details.

4040083-5/G

PACKAGE OUTLINE

J0014A

CDIP - 5.08 mm max height

CERAMIC DUAL IN LINE PACKAGE

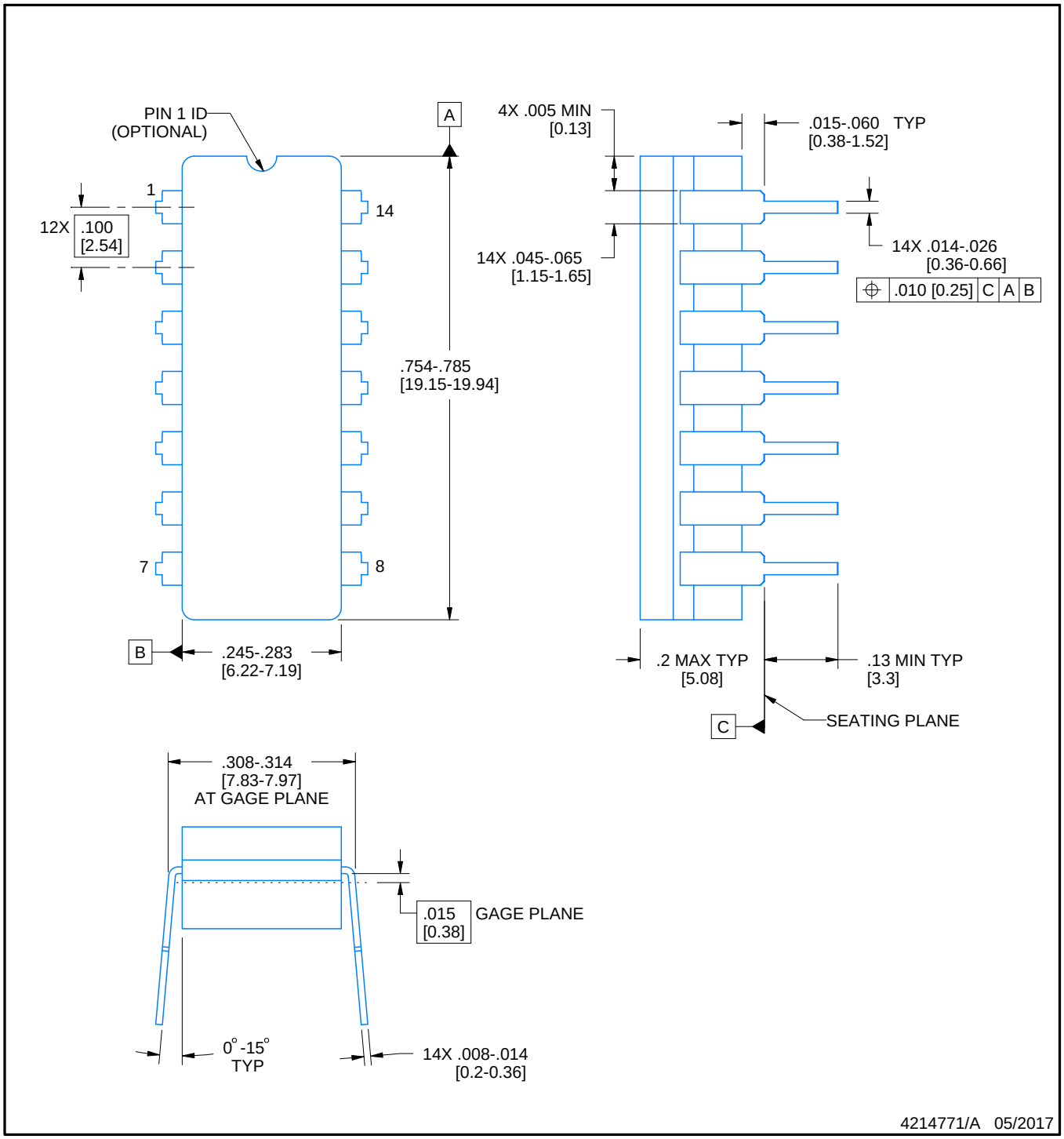

NOTES:

1. All controlling linear dimensions are in inches. Dimensions in brackets are in millimeters. Any dimension in brackets or parenthesis are for reference only. Dimensioning and tolerancing per ASME Y14.5M.
2. This drawing is subject to change without notice.
3. This package is hermitically sealed with a ceramic lid using glass frit.
4. Index point is provided on cap for terminal identification only and on press ceramic glass frit seal only.
5. Falls within MIL-STD-1835 and GDIP1-T14.

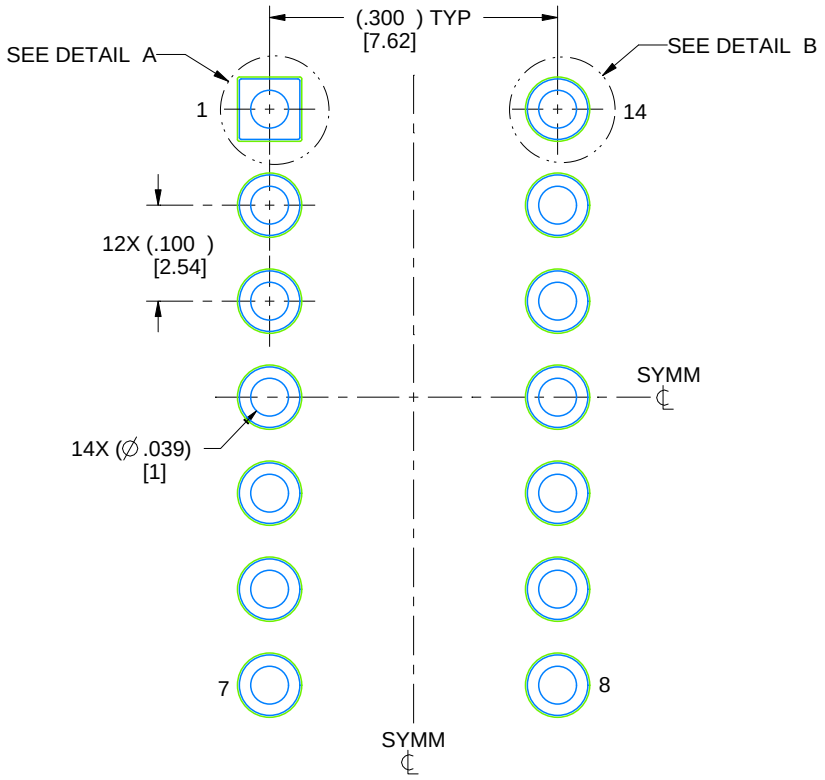

LAND PATTERN EXAMPLE
NON-SOLDER MASK DEFINED
SCALE: 5X

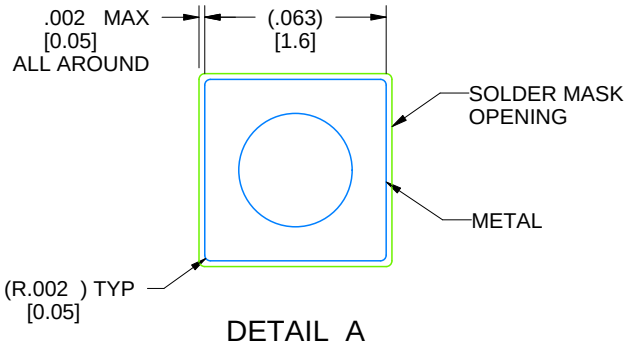

DETAIL A
SCALE: 15X

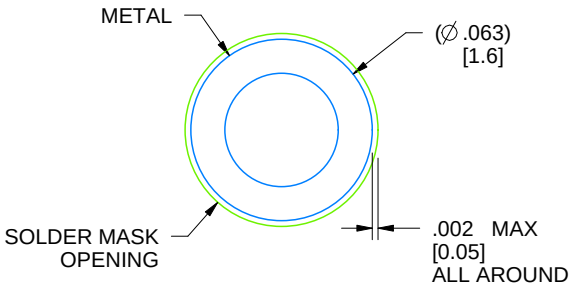

DETAIL B
13X, SCALE: 15X

4214771/A 05/2017

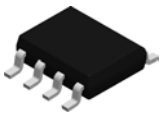

PACKAGE OUTLINE

D0008A

SOIC - 1.75 mm max height

SMALL OUTLINE INTEGRATED CIRCUIT

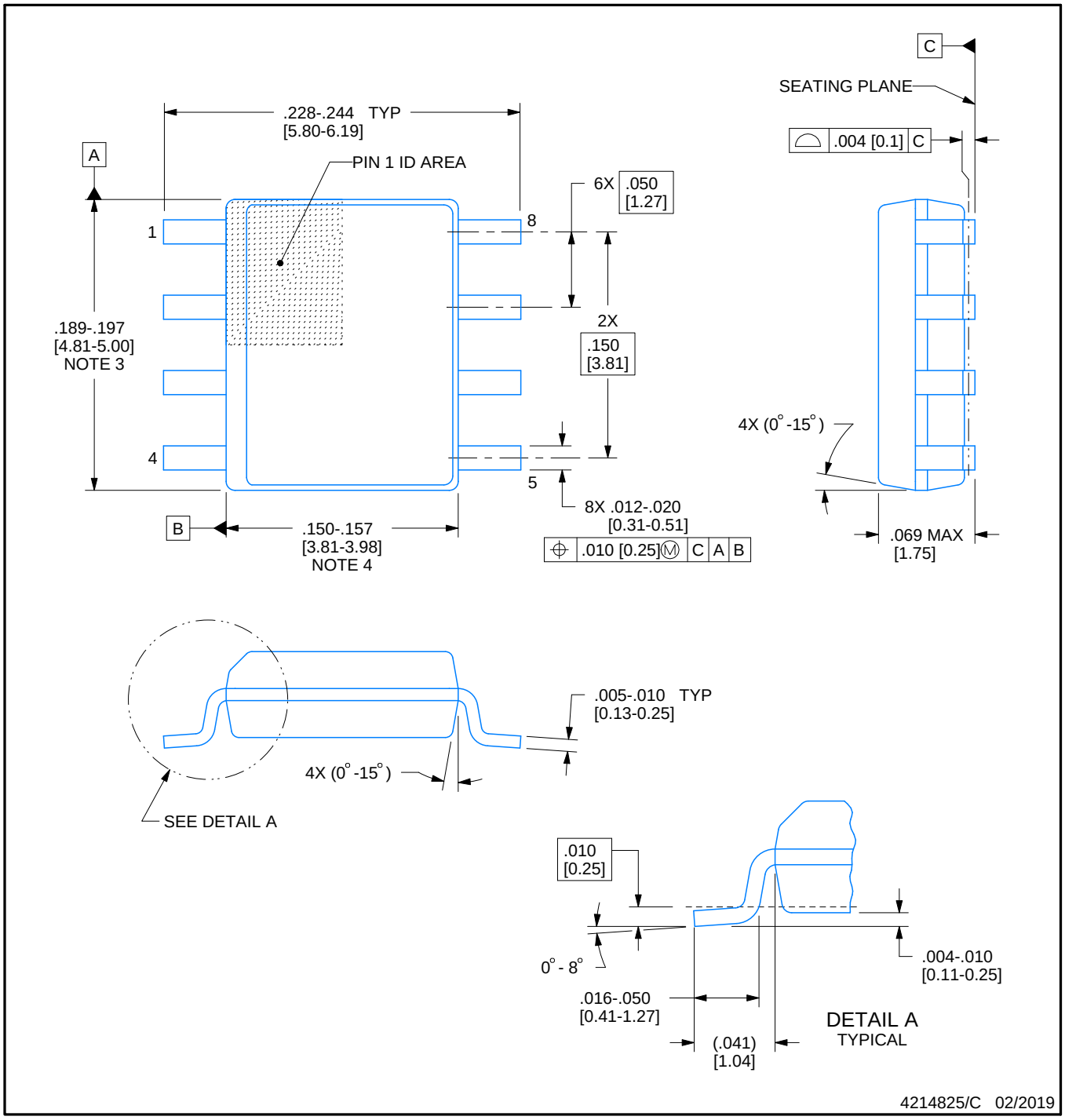

NOTES:

1. Linear dimensions are in inches [millimeters]. Dimensions in parenthesis are for reference only. Controlling dimensions are in inches. Dimensioning and tolerancing per ASME Y14.5M.
2. This drawing is subject to change without notice.
3. This dimension does not include mold flash, protrusions, or gate burrs. Mold flash, protrusions, or gate burrs shall not exceed .006 [0.15] per side.
4. This dimension does not include interlead flash.
5. Reference JEDEC registration MS-012, variation AA.

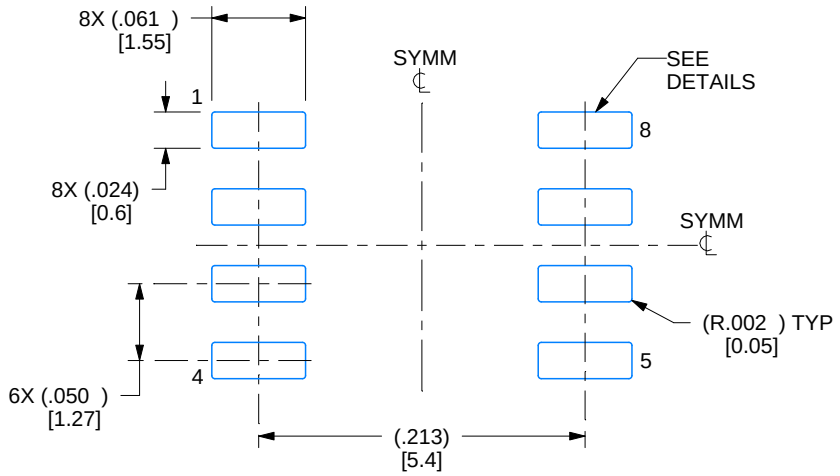

LAND PATTERN EXAMPLE
EXPOSED METAL SHOWN
SCALE:8X

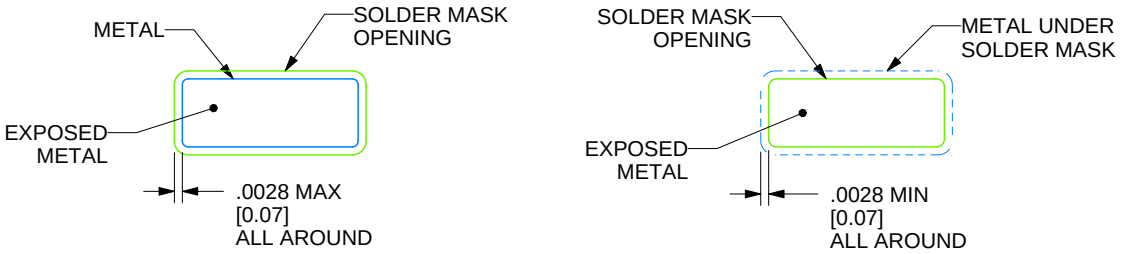

SOLDER MASK DETAILS

4214825/C 02/2019

NOTES: (continued)

6. Publication IPC-7351 may have alternate designs.
7. Solder mask tolerances between and around signal pads can vary based on board fabrication site.

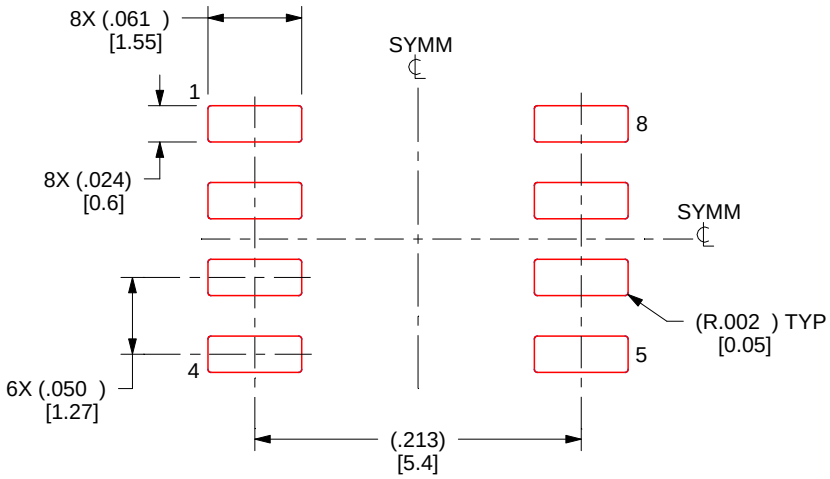

SOLDER PASTE EXAMPLE
BASED ON .005 INCH [0.125 MM] THICK STENCIL
SCALE:8X

4214825/C 02/2019

NOTES: (continued)

8. Laser cutting apertures with trapezoidal walls and rounded corners may offer better paste release. IPC-7525 may have alternate design recommendations.
9. Board assembly site may have different recommendations for stencil design.

P (R–PDIP–T8) PLASTIC DUAL–IN–LINE PACKAGE

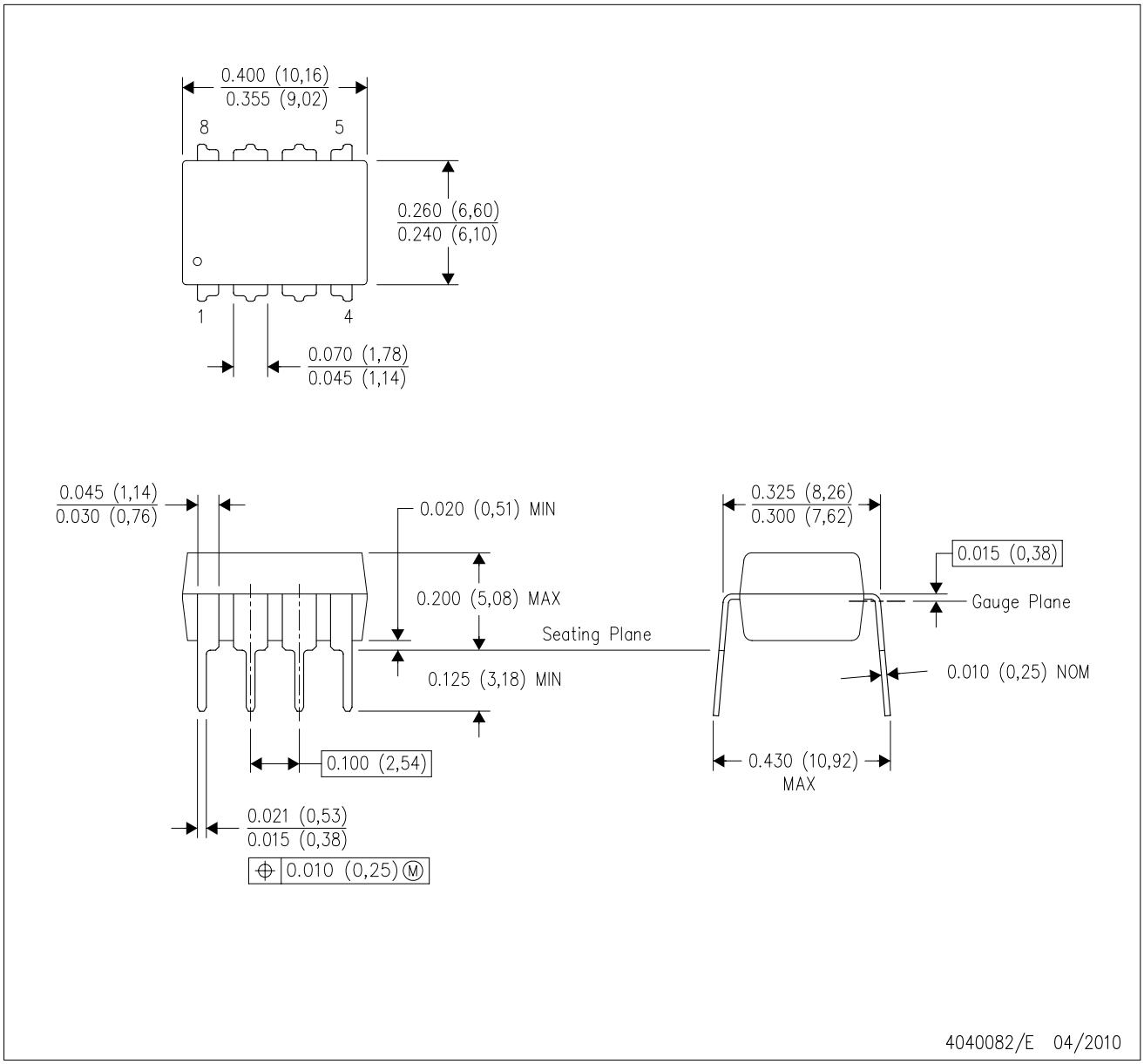

NOTES:
A. All linear dimensions are in inches (millimeters).
B. This drawing is subject to change without notice.
C. Falls within JEDEC MS–001 variation BA.

N (R–PDIP–T**) PLASTIC DUAL–IN–LINE PACKAGE

16 PINS SHOWN

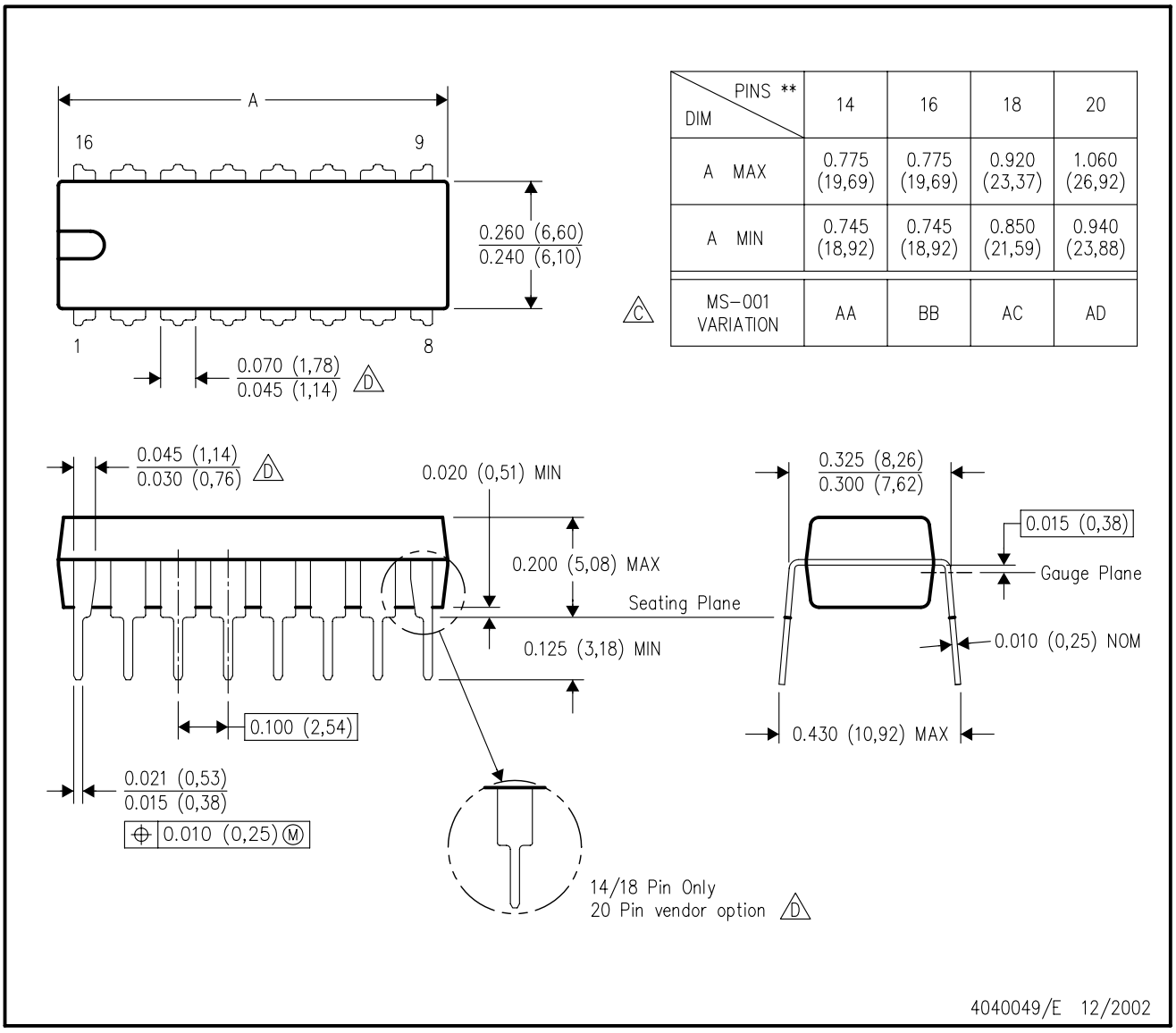

DIM \ PINS **	14	16	18	20
A MAX	0.775 (19,69)	0.775 (19,69)	0.920 (23,37)	1.060 (26,92)
A MIN	0.745 (18,92)	0.745 (18,92)	0.850 (21,59)	0.940 (23,88)
MS–001 VARIATION (C)	AA	BB	AC	AD

NOTES:
A. All linear dimensions are in inches (millimeters).
B. This drawing is subject to change without notice.
C. Falls within JEDEC MS–001, except 18 and 20 pin minimum body length (Dim A).
D. The 20 pin end lead shoulder width is a vendor option, either half or full width.

IMPORTANT NOTICE AND DISCLAIMER

TI PROVIDES TECHNICAL AND RELIABILITY DATA (INCLUDING DATASHEETS), DESIGN RESOURCES (INCLUDING REFERENCE DESIGNS), APPLICATION OR OTHER DESIGN ADVICE, WEB TOOLS, SAFETY INFORMATION, AND OTHER RESOURCES “AS IS” AND WITH ALL FAULTS, AND DISCLAIMS ALL WARRANTIES, EXPRESS AND IMPLIED, INCLUDING WITHOUT LIMITATION ANY IMPLIED WARRANTIES OF MERCHANTABILITY, FITNESS FOR A PARTICULAR PURPOSE OR NON-INFRINGEMENT OF THIRD PARTY INTELLECTUAL PROPERTY RIGHTS.

These resources are intended for skilled developers designing with TI products. You are solely responsible for (1) selecting the appropriate TI products for your application, (2) designing, validating and testing your application, and (3) ensuring your application meets applicable standards, and any other safety, security, regulatory or other requirements.

These resources are subject to change without notice. TI grants you permission to use these resources only for development of an application that uses the TI products described in the resource. Other reproduction and display of these resources is prohibited. No license is granted to any other TI intellectual property right or to any third party intellectual property right. TI disclaims responsibility for, and you fully indemnify TI and its representatives against any claims, damages, costs, losses, and liabilities arising out of your use of these resources.

TI’s products are provided subject to TI’s Terms of Sale, TI’s General Quality Guidelines, or other applicable terms available either on ti.com or provided in conjunction with such TI products. TI’s provision of these resources does not expand or otherwise alter TI’s applicable warranties or warranty disclaimers for TI products. Unless TI explicitly designates a product as custom or customer-specified, TI products are standard, catalog, general purpose devices.

TI objects to and rejects any additional or different terms you may propose.

Copyright © 2026, Texas Instruments Incorporated

Last updated 10/2025