- **Wide Bandwidth . . . 10 MHz**
- **High Output Drive**
  - **I_{OH} . . . 57 mA at V_{DD} – 1.5 V**
  - **I_{OL} . . . 55 mA at 0.5 V**
- **High Slew Rate**
  - **SR+ . . . 16 V/µs**
  - **SR– . . . 19 V/µs**
- **Wide Supply Range . . . 4.5 V to 16 V**
- **Supply Current . . . 1.9 mA/Channel**
- **Ultralow Power Shutdown Mode**
  I_{DD} . . . 125 µA/Channel
- **Low Input Noise Voltage . . . 7 nV/√Hz**
- **Input Offset Voltage . . . 60 µV**
- **Ultra-Small Packages**
  - **8 or 10 Pin MSOP (TLC070/1/2/3)**

Operational Amplifier

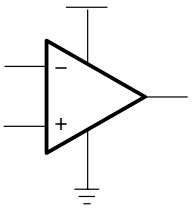

description

The first members of TI's new BiMOS general-purpose operational amplifier family are the TLC07x. The BiMOS family concept is simple: provide an upgrade path for BiFET users who are moving away from dual-supply to single-supply systems and demand higher AC and dc performance. With performance rated from 4.5 V to 16 V across commercial (0°C to 70°C) and an extended industrial temperature range (–40°C to 125°C), BiMOS suits a wide range of audio, automotive, industrial and instrumentation applications. Familiar features like offset nulling pins, and new features like MSOP PowerPAD™ packages and shutdown modes, enable higher levels of performance in a variety of applications.

Developed in TI's patented LBC3 BiCMOS process, the new BiMOS amplifiers combine a very high input impedance low-noise CMOS front end with a high-drive bipolar output stage, thus providing the optimum performance features of both. AC performance improvements over the TL07x BiFET predecessors include a bandwidth of 10 MHz (an increase of 300%) and voltage noise of 7 nV/√Hz (an improvement of 60%). DC improvements include a factor of 4 reduction in input offset voltage down to 1.5 mV (maximum) in the standard grade, and a power supply rejection improvement of greater than 40 dB to 130 dB. Added to this list of impressive features is the ability to drive ±50-mA loads comfortably from an ultrasmall-footprint MSOP PowerPAD package, which positions the TLC07x as the ideal high-performance general-purpose operational amplifier family.

FAMILY PACKAGE TABLE

DEVICE	NO. OF CHANNELS	PACKAGE TYPES				SHUTDOWN	UNIVERSAL EVM BOARD
		MSOP	PDIP	SOIC	TSSOP		
TLC070	1	8	8	8	—	Yes	Refer to the EVM Selection Guide (Lit# SLOU060)
TLC071	1	8	8	8	—		
TLC072	2	8	8	8	—	—	
TLC073	2	10	14	14	—	Yes	
TLC074	4	—	14	14	20	—	
TLC075	4	—	16	16	20	Yes	

Please be aware that an important notice concerning availability, standard warranty, and use in critical applications of Texas Instruments semiconductor products and disclaimers thereto appears at the end of this data sheet.

PowerPAD is a trademark of Texas Instruments. All other trademarks are the property of their respective owners.

PRODUCTION DATA information is current as of publication date. Products conform to specifications per the terms of Texas Instruments standard warranty. Production processing does not necessarily include testing of all parameters.

Copyright © 2000–2011, Texas Instruments Incorporated

TLC070 and TLC071 AVAILABLE OPTIONS

T_A	PACKAGED DEVICES			
	SMALL OUTLINE (D)†	SMALL OUTLINE (DGN)†	SYMBOL	PLASTIC DIP (P)
0°C to 70°C	TLC070CD TLC071CD	TLC070CDGN TLC071CDGN	xxTIACS xxTIACU	TLC070CP TLC071CP
–40°C to 125°C	TLC070ID TLC071ID	TLC070IDGN TLC071IDGN	xxTIACT xxTIACV	TLC070IP TLC071IP
	TLC070AID TLC071AID	— —	— —	TLC070AIP TLC071AIP

† This package is available taped and reeled. To order this packaging option, add an R suffix to the part number (e.g., TLC070CDR).

TLC072 and TLC073 AVAILABLE OPTIONS

T_A	PACKAGED DEVICES						
	SMALL OUTLINE (D)†	MSOP				PLASTIC DIP (N)	PLASTIC DIP (P)
		(DGN)†	SYMBOL‡	(DGQ)†	SYMBOL‡		
0°C to 70°C	TLC072CD TLC073CD	TLC072CDGN —	xxTIADV —	— TLC073CDGQ	— xxTIADX	— TLC073CN	TLC072CP —
–40°C to 125°C	TLC072ID TLC073ID	TLC072IDGN —	xxTIADW —	— TLC073IDGQ	— xxTIADY	— TLC073IN	TLC072IP —
	TLC072AID TLC073AID	— —	— —	— —	— —	— TLC073AIN	TLC072AIP —

† This package is available taped and reeled. To order this packaging option, add an R suffix to the part number (e.g., TLC072CDR).
‡ xx represents the device date code.

TLC074 and TLC075 AVAILABLE OPTIONS

T_A	PACKAGED DEVICES		
	SMALL OUTLINE (D)†	PLASTIC DIP (N)	TSSOP (PWP)†
0°C to 70°C	TLC074CD TLC075CD	TLC074CN TLC075CN	TLC074CPWP TLC075CPWP
–40°C to 125°C	TLC074ID TLC075ID	TLC074IN TLC075IN	TLC074IPWP TLC075IPWP
	TLC074AID TLC075AID	TLC074AIN TLC075AIN	TLC074AIPWP TLC075AIPWP

† This package is available taped and reeled. To order this packaging option, add an R suffix to the part number (e.g., TLC074CDR).

TLC07x PACKAGE PIN OUTS

TLC070
D, DGN OR P PACKAGE
(TOP VIEW)

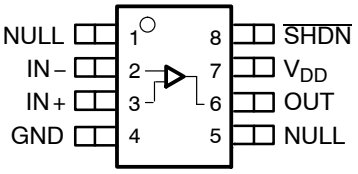

TLC071
D, DGN OR P PACKAGE
(TOP VIEW)

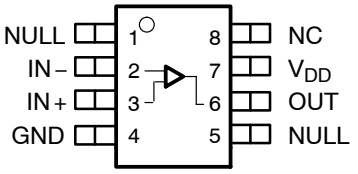

TLC072
D, DGN, OR P PACKAGE
(TOP VIEW)

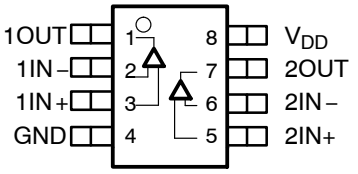

TLC073
DGQ PACKAGE
(TOP VIEW)

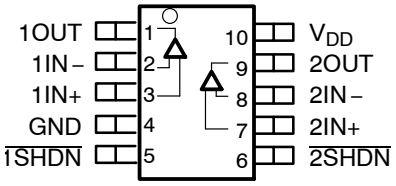

TLC073
D OR N PACKAGE
(TOP VIEW)

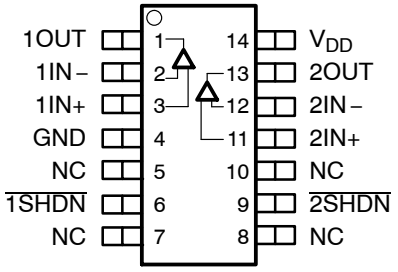

TLC074
D OR N PACKAGE
(TOP VIEW)

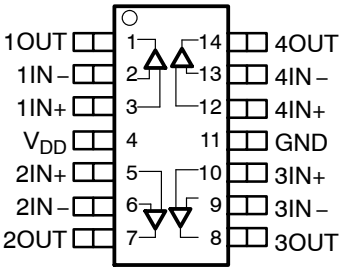

TLC074
PWP PACKAGE
(TOP VIEW)

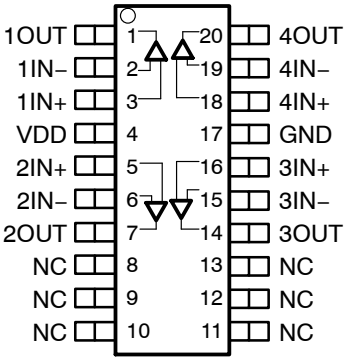

TLC075
D OR N PACKAGE
(TOP VIEW)

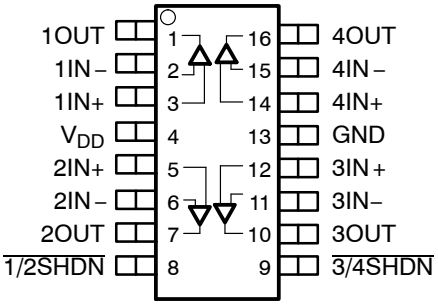

TLC075
PWP PACKAGE
(TOP VIEW)

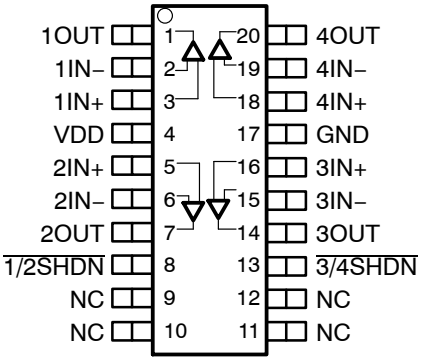

NC – No internal connection

TYPICAL PIN 1 INDICATORS

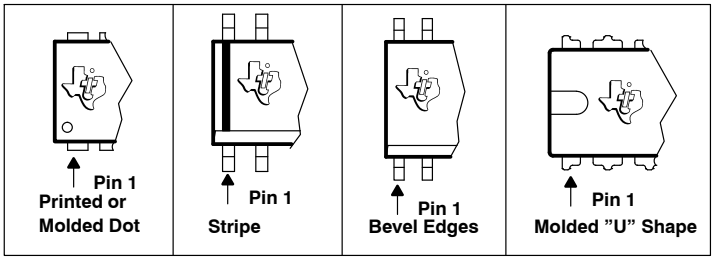

absolute maximum ratings over operating free-air temperature range (unless otherwise noted)†

Supply voltage, V_{DD} (see Note 1) . . . . . 17 V
Differential input voltage range, V_{ID} . . . . . $\pm V_{DD}$
Continuous total power dissipation . . . . . See Dissipation Rating Table
Operating free-air temperature range, T_A: C suffix . . . . . 0°C to 70°C
I suffix . . . . . –40°C to 125°C
Maximum junction temperature, T_J . . . . . 150°C
Storage temperature range, T_{stg} . . . . . –65°C to 150°C
Lead temperature 1,6 mm (1/16 inch) from case for 10 seconds . . . . . 260°C

† Stresses beyond those listed under "absolute maximum ratings" may cause permanent damage to the device. These are stress ratings only, and functional operation of the device at these or any other conditions beyond those indicated under "recommended operating conditions" is not implied. Exposure to absolute-maximum-rated conditions for extended periods may affect device reliability.
NOTE 1: All voltage values, except differential voltages, are with respect to GND.

DISSIPATION RATING TABLE

PACKAGE	θ_{JC} (°C/W)	θ_{JA} (°C/W)	$T_A \leq 25°C$ POWER RATING
D (8)	38.3	176	710 mW
D (14)	26.9	122.3	1022 mW
D (16)	25.7	114.7	1090 mW
DGN (8)	4.7	52.7	2.37 W
DGQ (10)	4.7	52.3	2.39 W
N (14, 16)	32	78	1600 mW
P (8)	41	104	1200 mW
PWP (20)	1.40	26.1	4.79 W

recommended operating conditions

		MIN	MAX	UNIT
Supply voltage, V_{DD}	Single supply	4.5	16	V
	Split supply	±2.25	±8	
Common-mode input voltage, V_{ICR}		+0.5	V_{DD}–0.8	V
Shutdown on/off voltage level‡	V_{IH}	2		V
	V_{OL}		0.8	
Operating free-air temperature, T_A	C-suffix	0	70	°C
	I-suffix	–40	125	

‡ Relative to the voltage on the GND terminal of the device.

electrical characteristics at specified free-air temperature, V_{DD} = 5 V (unless otherwise noted)

PARAMETER		TEST CONDITIONS		T_A†	MIN	TYP	MAX	UNIT
V_{IO}	Input offset voltage	V_{DD} = 5 V, V_{IC} = 2.5 V, V_O = 2.5 V, R_S = 50 Ω	TLC070/1/2/3, TLC074/5	25°C		390	1900	μV
				Full range			3000	
			TLC070/1/2/3A, TLC074/5A	25°C		390	1400	
				Full range			2000	
α_{VIO}	Temperature coefficient of input offset voltage					1.2		μV/°C
I_{IO}	Input offset current	V_{DD} = 5 V, V_{IC} = 2.5 V, V_O = 2.5 V, R_S = 50 Ω		25°C		0.7	50	pA
			TLC07XC	Full range			100	
			TLC07XI				700	
I_{IB}	Input bias current			25°C		1.5	50	pA
			TLC07XC	Full range			100	
			TLC07XI				700	
V_{ICR}	Common-mode input voltage	R_S = 50 Ω		25°C	0.5 to 4.2			V
				Full range	0.5 to 4.2			
V_{OH}	High-level output voltage	V_{IC} = 2.5 V	I_{OH} = −1 mA	25°C	4.1	4.3		V
				Full range	3.9			
			I_{OH} = −20 mA	25°C	3.7	4		
				Full range	3.5			
			I_{OH} = −35 mA	25°C	3.4	3.8		
				Full range	3.2			
			I_{OH} = −50 mA	25°C	3.2	3.6		
				−40°C to 85°C	3			
V_{OL}	Low-level output voltage	V_{IC} = 2.5 V	I_{OL} = 1 mA	25°C		0.18	0.25	V
				Full range			0.35	
			I_{OL} = 20 mA	25°C		0.35	0.39	
				Full range			0.45	
			I_{OL} = 35 mA	25°C		0.43	0.55	
				Full range			0.7	
			I_{OL} = 50 mA	25°C		0.48	0.63	
				−40°C to 85°C			0.7	
I_{OS}	Short-circuit output current	Sourcing		25°C		100		mA
		Sinking		25°C		100		
I_O	Output current	V_{OH} = 1.5 V from positive rail		25°C		57		mA
		V_{OL} = 0.5 V from negative rail		25°C		55		

† Full range is 0°C to 70°C for C suffix and −40°C to 125°C for I suffix. If not specified, full range is −40°C to 125°C.

electrical characteristics at specified free-air temperature, V_{DD} = 5 V (unless otherwise noted) (continued)

PARAMETER		TEST CONDITIONS		T_A†	MIN	TYP	MAX	UNIT
A_{VD}	Large-signal differential voltage amplification	$V_{O(PP)}$ = 3 V,	R_L = 10 kΩ	25°C	100	120		dB
				Full range	100			
$r_{i(d)}$	Differential input resistance			25°C		1000		GΩ
C_{IC}	Common-mode input capacitance	f = 10 kHz		25°C		22.9		pF
z_o	Closed-loop output impedance	f = 10 kHz,	A_V = 10	25°C		0.25		Ω
CMRR	Common-mode rejection ratio	V_{IC} = 1 to 3 V,	R_S = 50 Ω	25°C	80	95		dB
				Full range	80			
k_{SVR}	Supply voltage rejection ratio (ΔV_{DD} /ΔV_{IO})	V_{DD} = 4.5 V to 16 V, No load	V_{IC} = V_{DD}/2,	25°C	80	100		dB
				Full range	80			
I_{DD}	Supply current (per channel)	V_O = 2.5 V,	No load	25°C		1.9	2.5	mA
				Full range			3.5	
$I_{DD(SHDN)}$	Supply current in shutdown mode (per channel) (TLC070, TLC073, TLC075)	$\overline{SHDN}$ ≤ 0.8 V		25°C		125	200	µA
				Full range			250	

† Full range is 0°C to 70°C for C suffix and –40°C to 125°C for I suffix. If not specified, full range is –40°C to 125°C.

operating characteristics at specified free-air temperature, V_{DD} = 5 V (unless otherwise noted)

PARAMETER		TEST CONDITIONS		T_A†	MIN	TYP	MAX	UNIT
SR+	Positive slew rate at unity gain	$V_{O(PP)}$ = 0.8 V, R_L = 10 kΩ	C_L = 50 pF,	25°C	10	16		V/µs
				Full range	9.5			
SR–	Negative slew rate at unity gain	$V_{O(PP)}$ = 0.8 V, R_L = 10 kΩ	C_L = 50 pF,	25°C	12.5	19		V/µs
				Full range	10			
V_n	Equivalent input noise voltage	f = 100 Hz		25°C		12		nV/√Hz
		f = 1 kHz		25°C		7		
I_n	Equivalent input noise current	f = 1 kHz		25°C		0.6		fA/√Hz
THD + N	Total harmonic distortion plus noise	$V_{O(PP)}$ = 3 V, R_L = 10 kΩ and 250 Ω, f = 1 kHz	A_V = 1	25°C		0.002%		
			A_V = 10			0.012%		
			A_V = 100			0.085%		
$t_{(on)}$	Amplifier turn-on time‡	R_L = 10 kΩ		25°C		0.15		µs
$t_{(off)}$	Amplifier turn-off time‡			25°C		1.3		µs
	Gain-bandwidth product	f = 10 kHz,	R_L = 10 kΩ	25°C		10		MHz
t_s	Settling time	$V_{(STEP)PP}$ = 1 V, A_V = –1, C_L = 10 pF, R_L = 10 kΩ	0.1%	25°C		0.18		µs
			0.01%			0.39		
		$V_{(STEP)PP}$ = 1 V, A_V = –1, C_L = 47 pF, R_L = 10 kΩ	0.1%			0.18		
			0.01%			0.39		
ϕ_m	Phase margin	R_L = 10 kΩ,	C_L = 50 pF	25°C		32°		
		R_L = 10 kΩ,	C_L = 0 pF			40°		
	Gain margin	R_L = 10 kΩ,	C_L = 50 pF	25°C		2.2		dB
		R_L = 10 kΩ,	C_L = 0 pF			3.3		

† Full range is 0°C to 70°C for C suffix and –40°C to 125°C for I suffix. If not specified, full range is –40°C to 125°C.

‡ Disable time and enable time are defined as the interval between application of the logic signal to SHDN and the point at which the supply current has reached half its final value.

electrical characteristics at specified free-air temperature, V_{DD} = 12 V (unless otherwise noted)

PARAMETER		TEST CONDITIONS		T_A†	MIN	TYP	MAX	UNIT
V_{IO}	Input offset voltage	V_{DD} = 12 V, V_{IC} = 6 V, V_O = 6 V, R_S = 50 Ω	TLC070/1/2/3, TLC074/5	25°C		390	1900	μV
				Full range			3000	
			TLC070/1/2/3A, TLC074/5A	25°C		390	1400	
				Full range			2000	
α_{VIO}	Temperature coefficient of input offset voltage					1.2		μV/°C
I_{IO}	Input offset current	V_{DD} = 12 V, V_{IC} = 6 V, V_O = 6 V, R_S = 50 Ω		25°C		0.7	50	pA
			TLC07xC	Full range			100	
			TLC07xI				700	
I_{IB}	Input bias current			25°C		1.5	50	pA
			TLC07xC	Full range			100	
			TLC07xI				700	
V_{ICR}	Common-mode input voltage	R_S = 50 Ω		25°C	0.5 to 11.2			V
				Full range	0.5 to 11.2			
V_{OH}	High-level output voltage	V_{IC} = 6 V	I_{OH} = –1 mA	25°C	11.1	11.2		V
				Full range	11			
			I_{OH} = –20 mA	25°C	10.8	10.9		
				Full range	10.7			
			I_{OH} = –35 mA	25°C	10.6	10.7		
				Full range	10.3			
			I_{OH} = –50 mA	25°C	10.4	10.5		
				–40°C to 85°C	10.3			
V_{OL}	Low-level output voltage	V_{IC} = 6 V	I_{OL} = 1 mA	25°C		0.17	0.25	V
				Full range			0.35	
			I_{OL} = 20 mA	25°C		0.35	0.45	
				Full range			0.5	
			I_{OL} = 35 mA	25°C		0.4	0.52	
				Full range			0.6	
			I_{OL} = 50 mA	25°C		0.45	0.6	
				–40°C to 85°C			0.65	
I_{OS}	Short-circuit output current	Sourcing		25°C		150		mA
		Sinking		25°C		150		
I_O	Output current	V_{OH} = 1.5 V from positive rail		25°C		57		mA
		V_{OL} = 0.5 V from negative rail		25°C		55		

† Full range is 0°C to 70°C for C suffix and –40°C to 125°C for I suffix. If not specified, full range is –40°C to 125°C.

electrical characteristics at specified free-air temperature, V_{DD} = 12 V (unless otherwise noted) (continued)

PARAMETER		TEST CONDITIONS		T_A†	MIN	TYP	MAX	UNIT
A_{VD}	Large-signal differential voltage amplification	$V_{O(PP)}$ = 8 V,	R_L = 10 kΩ	25°C	120	140		dB
				Full range	120			
$r_{i(d)}$	Differential input resistance			25°C		1000		GΩ
C_{IC}	Common-mode input capacitance	f = 10 kHz		25°C		21.6		pF
z_o	Closed-loop output impedance	f = 10 kHz,	A_V = 10	25°C		0.25		Ω
CMRR	Common-mode rejection ratio	V_{IC} = 1 to 10 V,	R_S = 50 Ω	25°C	80	100		dB
				Full range	80			
k_{SVR}	Supply voltage rejection ratio (ΔV_{DD} /ΔV_{IO})	V_{DD} = 4.5 V to 16 V, No load	V_{IC} = V_{DD}/2,	25°C	80	100		dB
				Full range	80			
I_{DD}	Supply current (per channel)	V_O = 7.5 V,	No load	25°C		2.1	2.9	mA
				Full range			3.5	
$I_{DD(SHDN)}$	Supply current in shutdown mode (TLC070, TLC073, TLC075) (per channel)	$\overline{SHDN}$ ≤ 0.8 V		25°C		125	200	µA
				Full range			250	

† Full range is 0°C to 70°C for C suffix and –40°C to 125°C for I suffix. If not specified, full range is –40°C to 125°C.

operating characteristics at specified free-air temperature, V_{DD} = 12 V (unless otherwise noted)

PARAMETER		TEST CONDITIONS		T_A†	MIN	TYP	MAX	UNIT
SR+	Positive slew rate at unity gain	$V_{O(PP)}$ = 2 V, R_L = 10 kΩ	C_L = 50 pF,	25°C	10	16		V/µs
				Full range	9.5			
SR–	Negative slew rate at unity gain	$V_{O(PP)}$ = 2 V, R_L = 10 kΩ	C_L = 50 pF,	25°C	12.5	19		V/µs
				Full range	10			
V_n	Equivalent input noise voltage	f = 100 Hz		25°C		12		nV/√Hz
		f = 1 kHz		25°C		7		
I_n	Equivalent input noise current	f = 1 kHz		25°C		0.6		fA/√Hz
THD + N	Total harmonic distortion plus noise	$V_{O(PP)}$ = 8 V, R_L = 10 kΩ and 250 Ω, f = 1 kHz	A_V = 1	25°C		0.002%		
			A_V = 10			0.005%		
			A_V = 100			0.022%		
$t_{(on)}$	Amplifier turn-on time‡	R_L = 10 kΩ		25°C		0.47		µs
$t_{(off)}$	Amplifier turn-off time‡			25°C		2.5		µs
	Gain-bandwidth product	f = 10 kHz,	R_L = 10 kΩ	25°C		10		MHz
t_s	Settling time	$V_{(STEP)PP}$ = 1 V, A_V = –1, C_L = 10 pF, R_L = 10 kΩ	0.1%	25°C		0.17		µs
			0.01%			0.22		
		$V_{(STEP)PP}$ = 1 V, A_V = –1, C_L = 47 pF, R_L = 10 kΩ	0.1%			0.17		
			0.01%			0.29		
ϕ_m	Phase margin	R_L = 10 kΩ,	C_L = 50 pF	25°C		37°		
		R_L = 10 kΩ,	C_L = 0 pF			42°		
	Gain margin	R_L = 10 kΩ,	C_L = 50 pF	25°C		3.1		dB
		R_L = 10 kΩ,	C_L = 0 pF			4		

† Full range is 0°C to 70°C for C suffix and –40°C to 125°C for I suffix. If not specified, full range is –40°C to 125°C.
‡ Disable time and enable time are defined as the interval between application of the logic signal to SHDN and the point at which the supply current has reached half its final value.

TYPICAL CHARACTERISTICS

Table of Graphs

			FIGURE
V_{IO}	Input offset voltage	vs Common-mode input voltage	1, 2
I_{IO}	Input offset current	vs Free-air temperature	3, 4
I_{IB}	Input bias current	vs Free-air temperature	3, 4
V_{OH}	High-level output voltage	vs High-level output current	5, 7
V_{OL}	Low-level output voltage	vs Low-level output current	6, 8
Z_o	Output impedance	vs Frequency	9
I_{DD}	Supply current	vs Supply voltage	10
PSRR	Power supply rejection ratio	vs Frequency	11
CMRR	Common-mode rejection ratio	vs Frequency	12
V_n	Equivalent input noise voltage	vs Frequency	13
$V_{O(PP)}$	Peak-to-peak output voltage	vs Frequency	14, 15
	Crosstalk	vs Frequency	16
	Differential voltage gain	vs Frequency	17, 18
	Phase	vs Frequency	17, 18
ϕ_m	Phase margin	vs Load capacitance	19, 20
	Gain margin	vs Load capacitance	21, 22
	Gain-bandwidth product	vs Supply voltage	23
SR	Slew rate	vs Supply voltage vs Free-air temperature	24 25, 26
THD + N	Total harmonic distortion plus noise	vs Frequency	27, 28
		vs Peak-to-peak output voltage	29, 30
	Large-signal follower pulse response		31, 32
	Small-signal follower pulse response		33
	Large-signal inverting pulse response		34, 35
	Small-signal inverting pulse response		36
	Shutdown forward isolation	vs Frequency	37, 38
	Shutdown reverse isolation	vs Frequency	39, 40
	Shutdown supply current	vs Supply voltage	41
		vs Free-air temperature	42
	Shutdown pulse		43, 44

TYPICAL CHARACTERISTICS

INPUT OFFSET VOLTAGE vs COMMON-MODE INPUT VOLTAGE

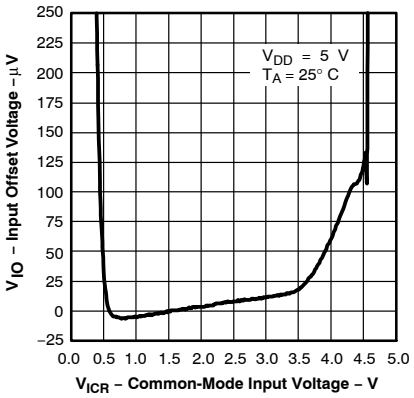

Figure 1

INPUT OFFSET VOLTAGE vs COMMON-MODE INPUT VOLTAGE

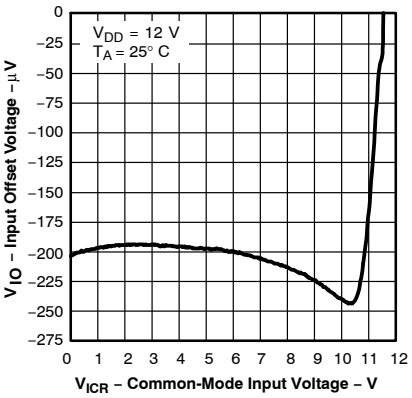

Figure 2

INPUT BIAS CURRENT AND INPUT OFFSET CURRENT vs FREE-AIR TEMPERATURE

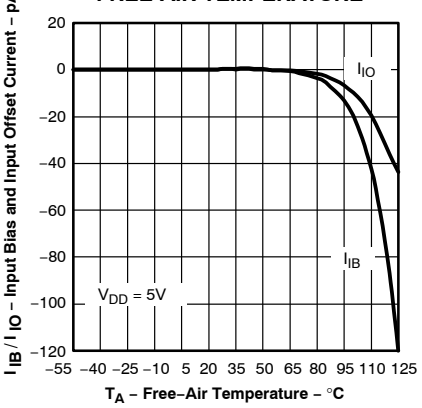

Figure 3

INPUT BIAS CURRENT AND INPUT OFFSET CURRENT vs FREE-AIR TEMPERATURE

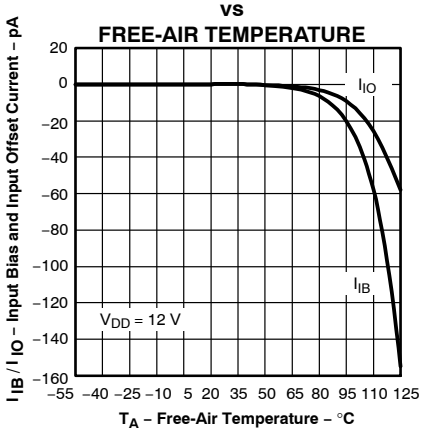

Figure 4

HIGH-LEVEL OUTPUT VOLTAGE vs HIGH-LEVEL OUTPUT CURRENT

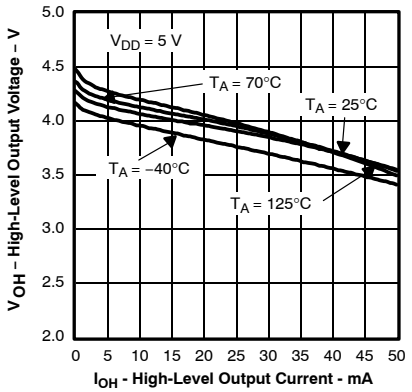

Figure 5

LOW-LEVEL OUTPUT VOLTAGE vs LOW-LEVEL OUTPUT CURRENT

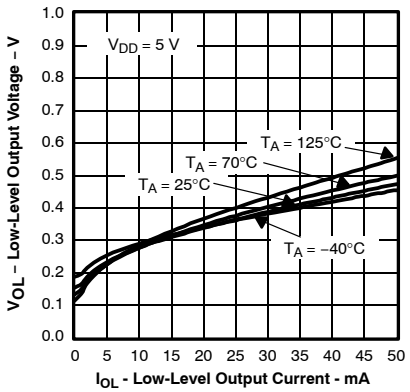

Figure 6

HIGH-LEVEL OUTPUT VOLTAGE vs HIGH-LEVEL OUTPUT CURRENT

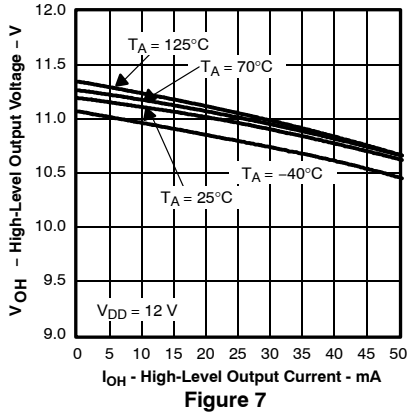

Figure 7

LOW-LEVEL OUTPUT VOLTAGE vs LOW-LEVEL OUTPUT CURRENT

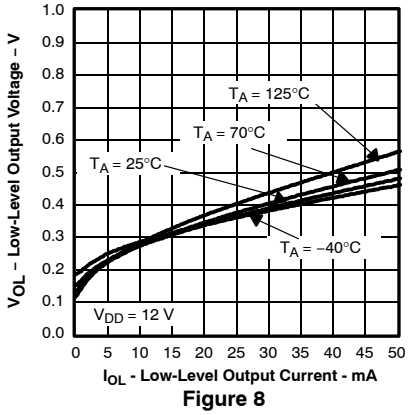

Figure 8

OUTPUT IMPEDANCE vs FREQUENCY

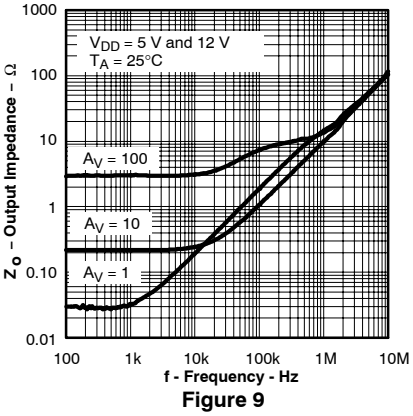

Figure 9

TYPICAL CHARACTERISTICS

SUPPLY CURRENT vs SUPPLY VOLTAGE

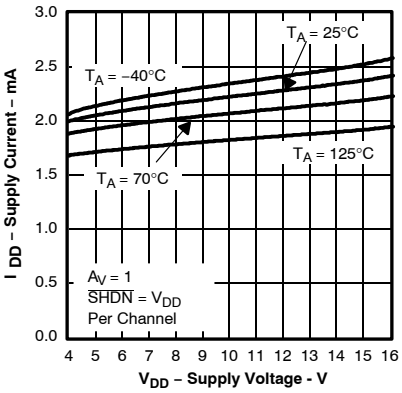

Figure 10

POWER SUPPLY REJECTION RATIO vs FREQUENCY

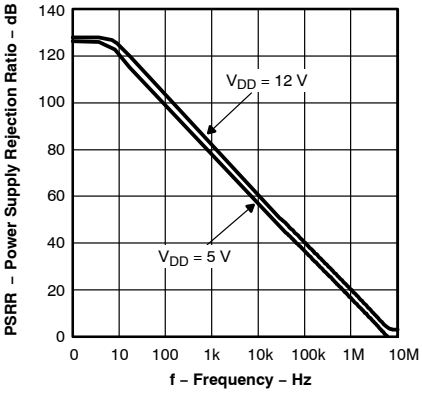

Figure 11

COMMON-MODE REJECTION RATIO vs FREQUENCY

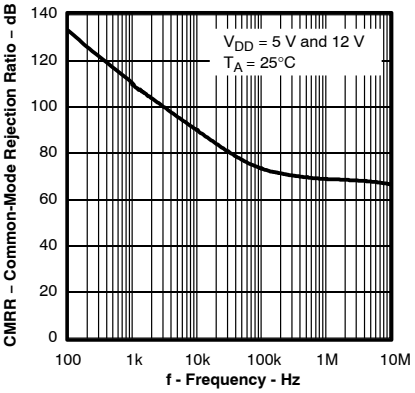

Figure 12

EQUIVALENT INPUT NOISE VOLTAGE vs FREQUENCY

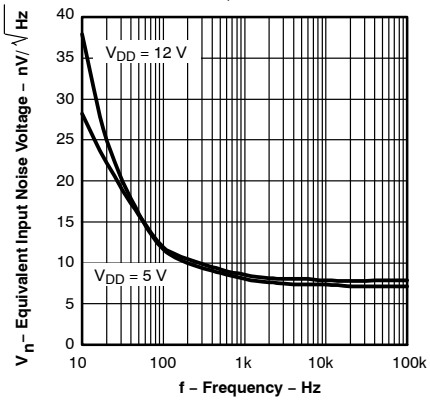

Figure 13

PEAK-TO-PEAK OUTPUT VOLTAGE vs FREQUENCY

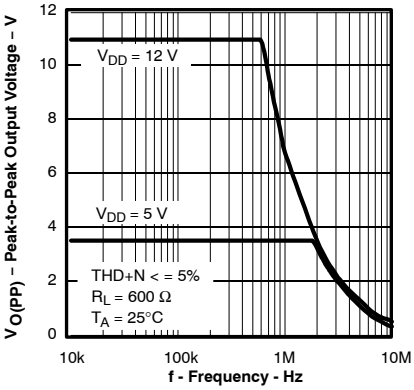

Figure 14

PEAK-TO-PEAK OUTPUT VOLTAGE vs FREQUENCY

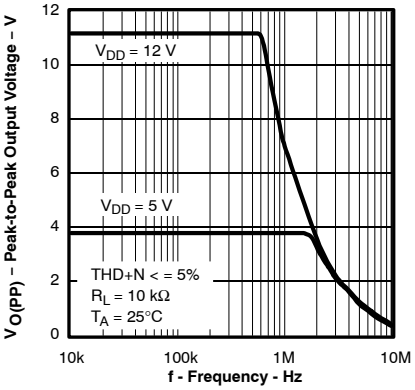

Figure 15

CROSSTALK vs FREQUENCY

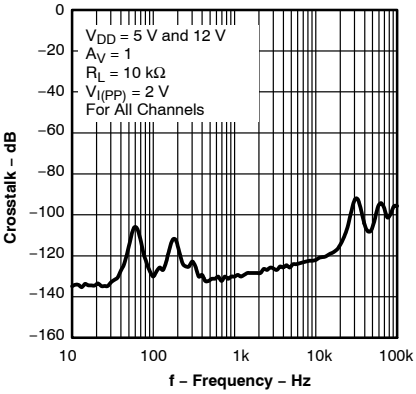

Figure 16

TYPICAL CHARACTERISTICS

DIFFERENTIAL VOLTAGE GAIN AND PHASE vs FREQUENCY

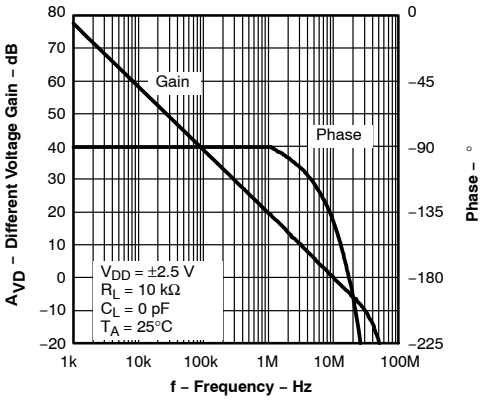

Figure 17

DIFFERENTIAL VOLTAGE GAIN AND PHASE vs FREQUENCY

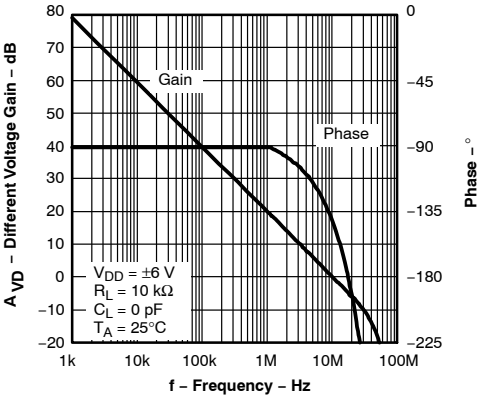

Figure 18

PHASE MARGIN vs LOAD CAPACITANCE

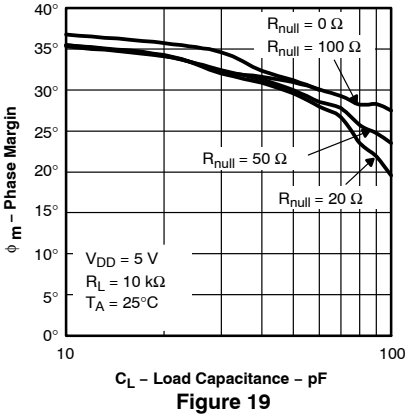

Figure 19

PHASE MARGIN vs LOAD CAPACITANCE

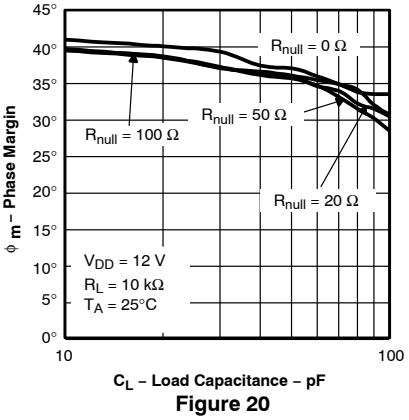

Figure 20

GAIN MARGIN vs LOAD CAPACITANCE

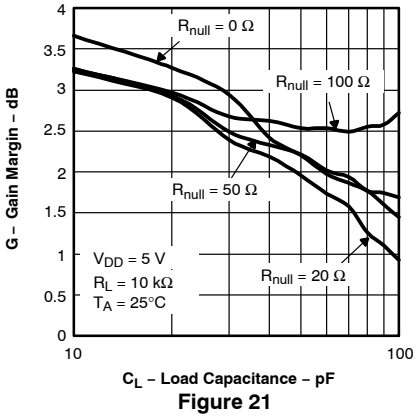

Figure 21

GAIN MARGIN vs LOAD CAPACITANCE

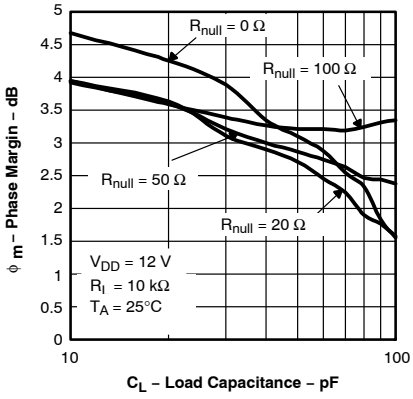

Figure 22

GAIN BANDWIDTH PRODUCT vs SUPPLY VOLTAGE

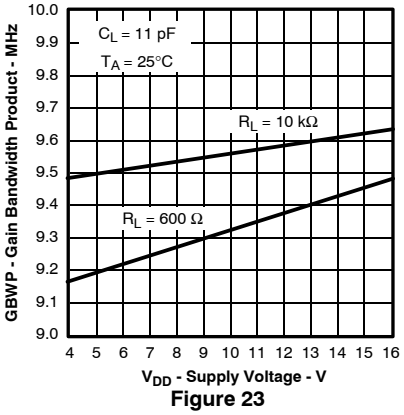

Figure 23

SLEW RATE vs SUPPLY VOLTAGE

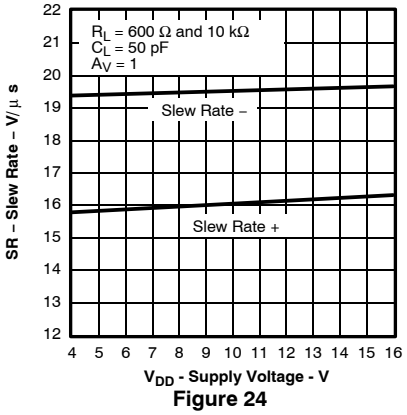

Figure 24

TYPICAL CHARACTERISTICS

SLEW RATE vs FREE-AIR TEMPERATURE

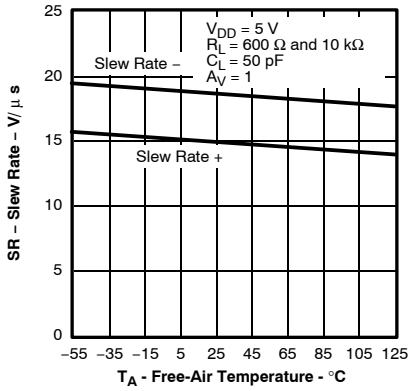

Figure 25

SLEW RATE vs FREE-AIR TEMPERATURE

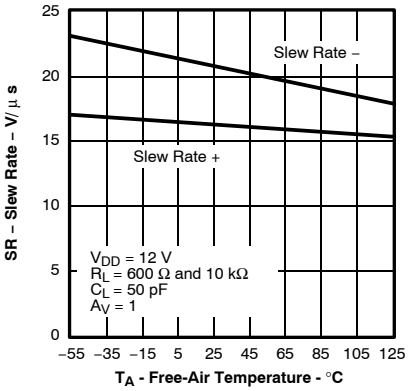

Figure 26

TOTAL HARMONIC DISTORTION PLUS NOISE vs FREQUENCY

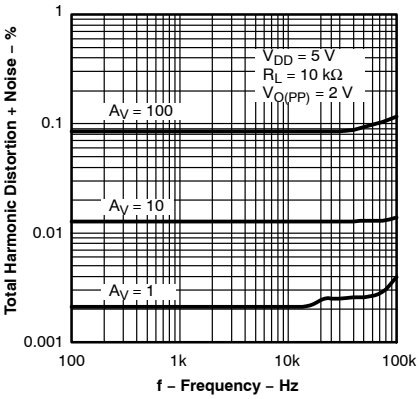

Figure 27

TOTAL HARMONIC DISTORTION PLUS NOISE vs FREQUENCY

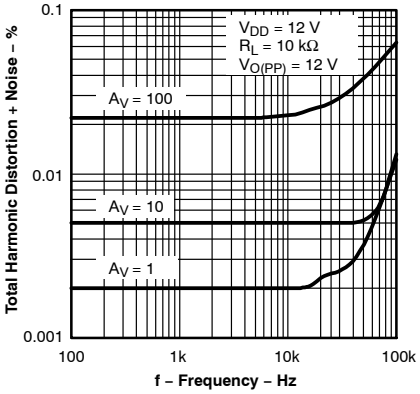

Figure 28

TOTAL HARMONIC DISTORTION PLUS NOISE vs PEAK-TO-PEAK OUTPUT VOLTAGE

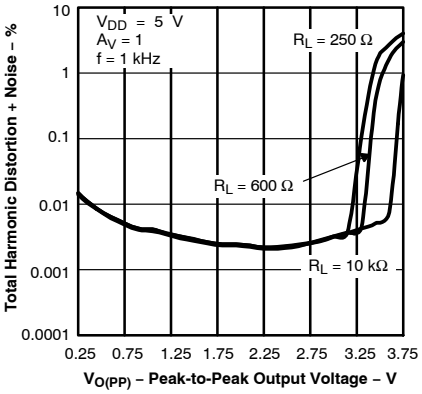

Figure 29

TOTAL HARMONIC DISTORTION PLUS NOISE vs PEAK-TO-PEAK OUTPUT VOLTAGE

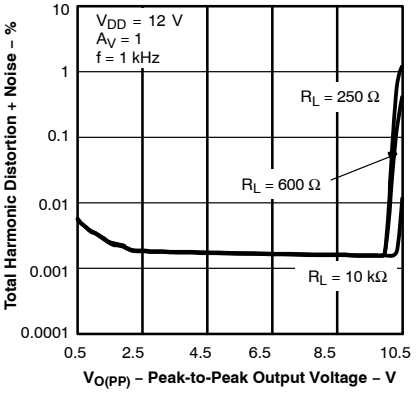

Figure 30

LARGE SIGNAL FOLLOWER PULSE RESPONSE

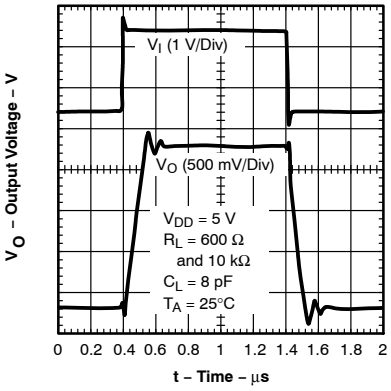

Figure 31

LARGE SIGNAL FOLLOWER PULSE RESPONSE

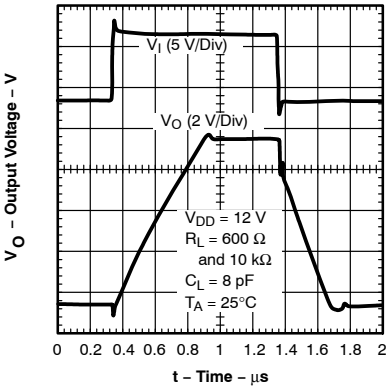

Figure 32

SMALL SIGNAL FOLLOWER PULSE RESPONSE

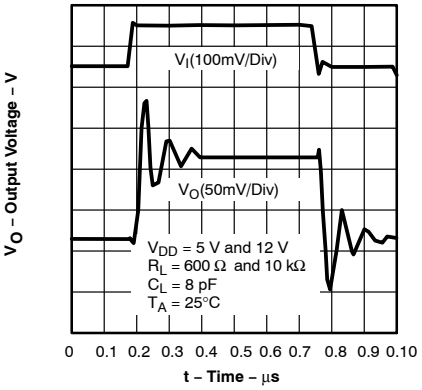

Figure 33

TYPICAL CHARACTERISTICS

LARGE SIGNAL INVERTING PULSE RESPONSE

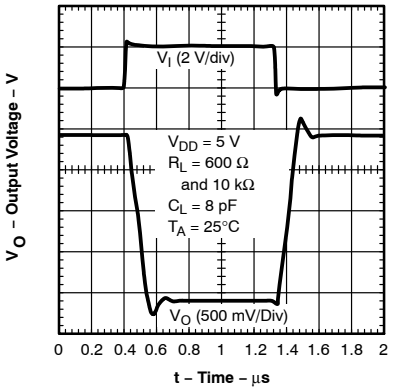

Figure 34

LARGE SIGNAL INVERTING PULSE RESPONSE

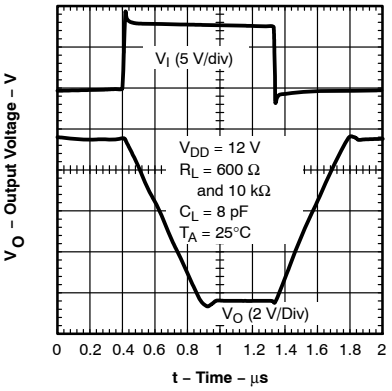

Figure 35

SMALL SIGNAL INVERTING PULSE RESPONSE

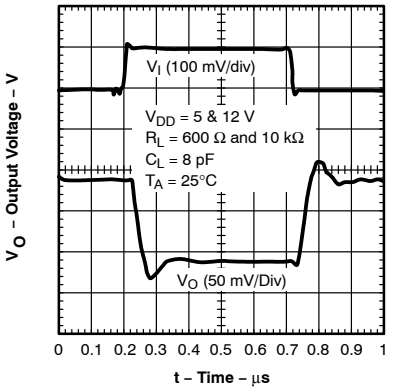

Figure 36

SHUTDOWN FORWARD ISOLATION vs FREQUENCY

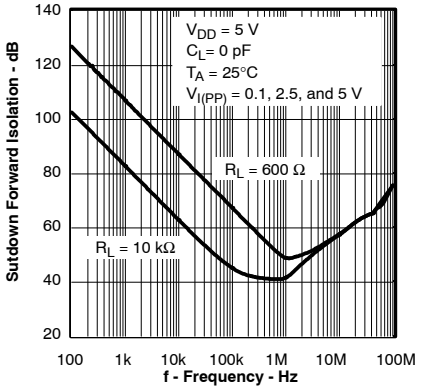

Figure 37

SHUTDOWN FORWARD ISOLATION vs FREQUENCY

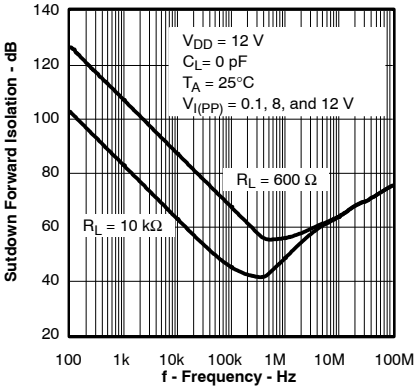

Figure 38

SHUTDOWN REVERSE ISOLATION vs FREQUENCY

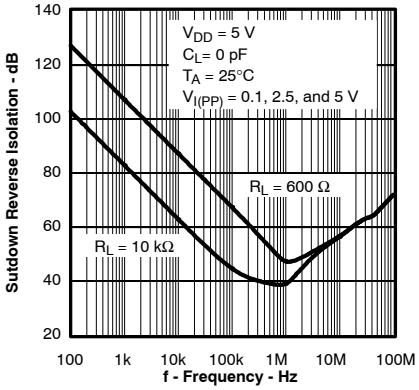

Figure 39

SHUTDOWN REVERSE ISOLATION vs FREQUENCY

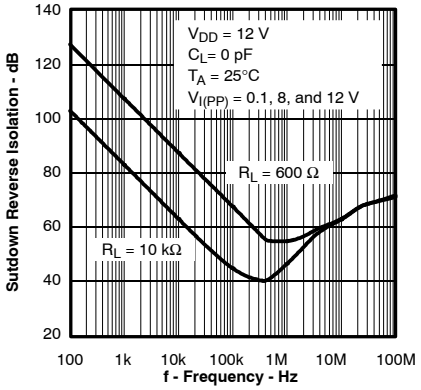

Figure 40

SHUTDOWN SUPPLY CURRENT vs SUPPLY VOLTAGE

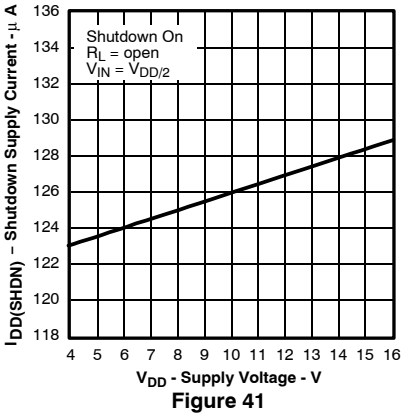

Figure 41

SHUTDOWN SUPPLY CURRENT vs FREE-AIR TEMPERATURE

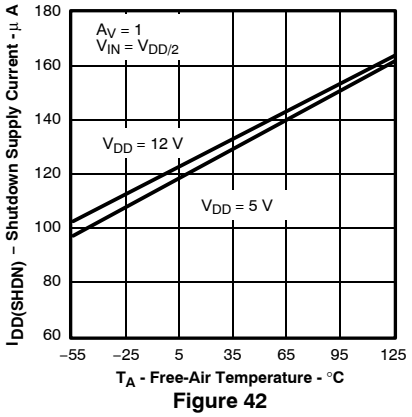

Figure 42

TYPICAL CHARACTERISTICS

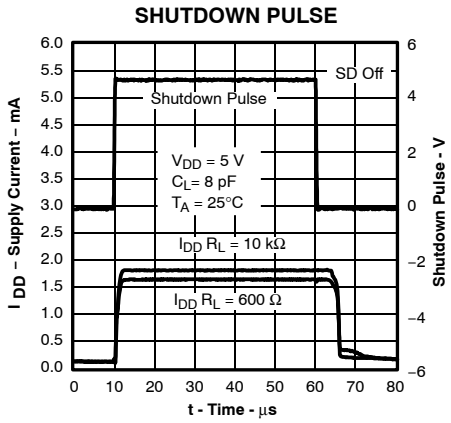

Figure 43

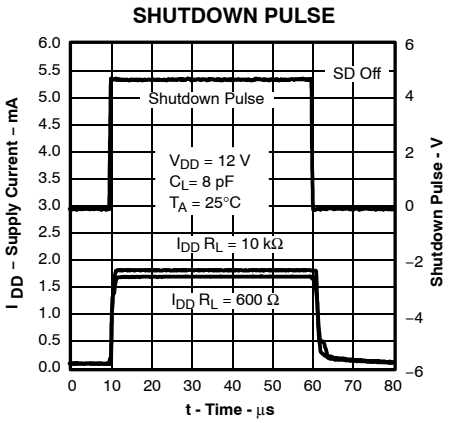

Figure 44

PARAMETER MEASUREMENT INFORMATION

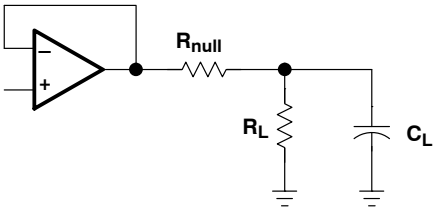

Figure 45

APPLICATION INFORMATION

input offset voltage null circuit

The TLC070 and TLC071 has an input offset nulling function. Refer to Figure 46 for the diagram.

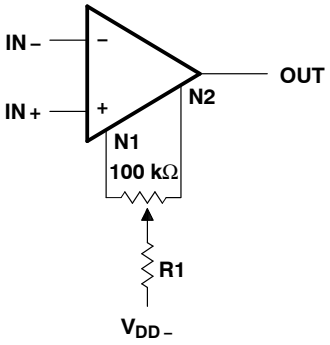

NOTE A: R1 = 5.6 kΩ for offset voltage adjustment of ±10 mV.
R1 = 20 kΩ for offset voltage adjustment of ±3 mV.

Figure 46. Input Offset Voltage Null Circuit

APPLICATION INFORMATION

driving a capacitive load

When the amplifier is configured in this manner, capacitive loading directly on the output will decrease the device's phase margin leading to high frequency ringing or oscillations. Therefore, for capacitive loads of greater than 10 pF, it is recommended that a resistor be placed in series (R_{NULL}) with the output of the amplifier, as shown in Figure 47. A minimum value of 20 Ω should work well for most applications.

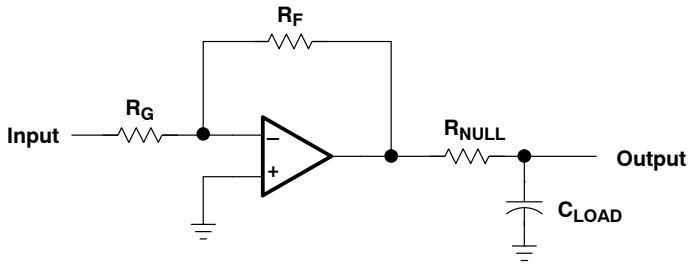

Figure 47. Driving a Capacitive Load

offset voltage

The output offset voltage, (V_{OO}) is the sum of the input offset voltage (V_{IO}) and both input bias currents (I_{IB}) times the corresponding gains. The following schematic and formula can be used to calculate the output offset voltage:

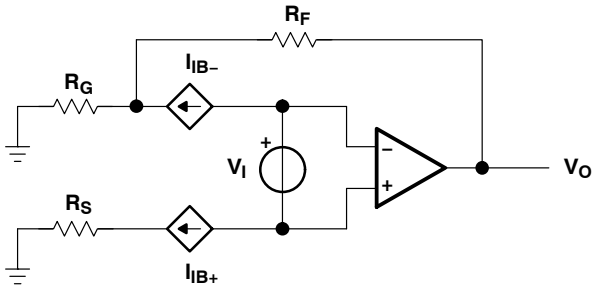

$$V_{OO} = V_{IO}\left(1 + \left(\frac{R_F}{R_G}\right)\right) \pm I_{IB+} R_S \left(1 + \left(\frac{R_F}{R_G}\right)\right) \pm I_{IB-} R_F$$

Figure 48. Output Offset Voltage Model

APPLICATION INFORMATION

high speed CMOS input amplifiers

The TLC07x is a family of high-speed low-noise CMOS input operational amplifiers that has an input capacitance of the order of 20 pF. Any resistor used in the feedback path adds a pole in the transfer function equivalent to the input capacitance multiplied by the combination of source resistance and feedback resistance. For example, a gain of –10, a source resistance of 1 kΩ, and a feedback resistance of 10 kΩ add an additional pole at approximately 8 MHz. This is more apparent with CMOS amplifiers than bipolar amplifiers due to their greater input capacitance.

This is of little consequence on slower CMOS amplifiers, as this pole normally occurs at frequencies above their unity-gain bandwidth. However, the TLC07x with its 10-MHz bandwidth means that this pole normally occurs at frequencies where there is on the order of 5 dB gain left and the phase shift adds considerably.

The effect of this pole is the strongest with large feedback resistances at small closed loop gains. As the feedback resistance is increased, the gain peaking increases at a lower frequency and the 180° phase shift crossover point also moves down in frequency, decreasing the phase margin.

For the TLC07x, the maximum feedback resistor recommended is 5 kΩ; larger resistances can be used but a capacitor in parallel with the feedback resistor is recommended to counter the effects of the input capacitance pole.

The TLC073 with a 1-V step response has an 80% overshoot with a natural frequency of 3.5 MHz when configured as a unity gain buffer and with a 10-kΩ feedback resistor. By adding a 10-pF capacitor in parallel with the feedback resistor, the overshoot is reduced to 40% and eliminates the natural frequency, resulting in a much faster settling time (see Figure 49). The 10-pF capacitor was chosen for convenience only.

Load capacitance had little effect on these measurements due to the excellent output drive capability of the TLC07x.

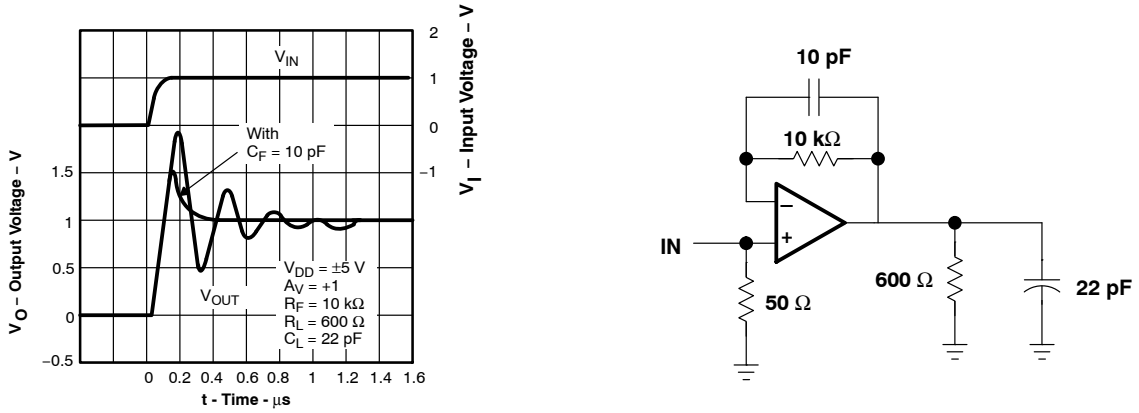

Figure 49. 1-V Step Response

APPLICATION INFORMATION

general configurations

When receiving low-level signals, limiting the bandwidth of the incoming signals into the system is often required. The simplest way to accomplish this is to place an RC filter at the noninverting terminal of the amplifier (see Figure 50).

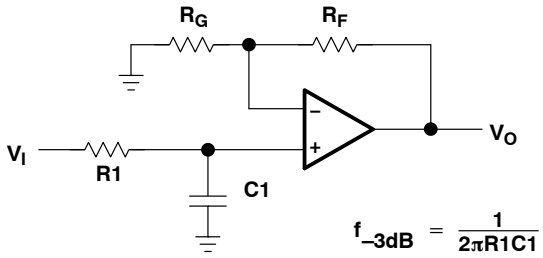

$$\frac{V_O}{V_I} = \left(1 + \frac{R_F}{R_G}\right)\left(\frac{1}{1 + sR1C1}\right)$$

Figure 50. Single-Pole Low-Pass Filter

If even more attenuation is needed, a multiple pole filter is required. The Sallen-Key filter can be used for this task. For best results, the amplifier should have a bandwidth that is 8 to 10 times the filter frequency bandwidth. Failure to do this can result in phase shift of the amplifier.

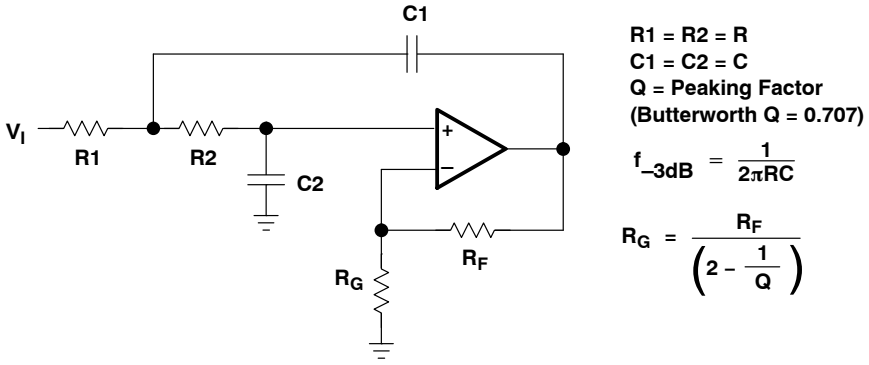

Figure 51. 2-Pole Low-Pass Sallen-Key Filter

APPLICATION INFORMATION

shutdown function

Three members of the TLC07x family (TLC070/3/5) have a shutdown terminal ($\overline{SHDN}$) for conserving battery life in portable applications. When the shutdown terminal is tied low, the supply current is reduced to 125 µA/channel, the amplifier is disabled, and the outputs are placed in a high-impedance mode. To enable the amplifier, the shutdown terminal can either be left floating or pulled high. When the shutdown terminal is left floating, care should be taken to ensure that parasitic leakage current at the shutdown terminal does not inadvertently place the operational amplifier into shutdown. The shutdown terminal threshold is always referenced to the voltage on the GND terminal of the device. Therefore, when operating the device with split supply voltages (e.g. ±2.5 V), the shutdown terminal needs to be pulled to V_{DD-} (not system ground) to disable the operational amplifier.

The amplifier's output with a shutdown pulse is shown in Figures 43 and 44. The amplifier is powered with a single 5-V supply and is configured as noninverting with a gain of 5. The amplifier turn-on and turn-off times are measured from the 50% point of the shutdown pulse to the 50% point of the output waveform. The times for the single, dual, and quad are listed in the data tables.

Figures 37, 38, 39, and 40 show the amplifier's forward and reverse isolation in shutdown. The operational amplifier is configured as a voltage follower (A_V = 1). The isolation performance is plotted across frequency using 0.1 V_{PP}, 2.5 V_{PP}, and 5 V_{PP} input signals at ±2.5 V supplies and 0.1 V_{PP}, 8 V_{PP}, and 12 V_{PP} input signals at ±6 V supplies.

circuit layout considerations

To achieve the levels of high performance of the TLC07x, follow proper printed-circuit board design techniques. A general set of guidelines is given in the following.

- Ground planes – It is highly recommended that a ground plane be used on the board to provide all components with a low inductive ground connection. However, in the areas of the amplifier inputs and output, the ground plane can be removed to minimize the stray capacitance.
- Proper power supply decoupling – Use a 6.8-µF tantalum capacitor in parallel with a 0.1-µF ceramic capacitor on each supply terminal. It may be possible to share the tantalum among several amplifiers depending on the application, but a 0.1-µF ceramic capacitor should always be used on the supply terminal of every amplifier. In addition, the 0.1-µF capacitor should be placed as close as possible to the supply terminal. As this distance increases, the inductance in the connecting trace makes the capacitor less effective. The designer should strive for distances of less than 0.1 inches between the device power terminals and the ceramic capacitors.
- Sockets – Sockets can be used but are not recommended. The additional lead inductance in the socket pins will often lead to stability problems. Surface-mount packages soldered directly to the printed-circuit board is the best implementation.
- Short trace runs/compact part placements – Optimum high performance is achieved when stray series inductance has been minimized. To realize this, the circuit layout should be made as compact as possible, thereby minimizing the length of all trace runs. Particular attention should be paid to the inverting input of the amplifier. Its length should be kept as short as possible. This will help to minimize stray capacitance at the input of the amplifier.
- Surface-mount passive components – Using surface-mount passive components is recommended for high performance amplifier circuits for several reasons. First, because of the extremely low lead inductance of surface-mount components, the problem with stray series inductance is greatly reduced. Second, the small size of surface-mount components naturally leads to a more compact layout thereby minimizing both stray inductance and capacitance. If leaded components are used, it is recommended that the lead lengths be kept as short as possible.

APPLICATION INFORMATION

general PowerPAD design considerations

The TLC07x is available in a thermally-enhanced PowerPAD family of packages. These packages are constructed using a downset leadframe upon which the die is mounted [see Figure 52(a) and Figure 52(b)]. This arrangement results in the lead frame being exposed as a thermal pad on the underside of the package [see Figure 52(c)]. Because this thermal pad has direct thermal contact with the die, excellent thermal performance can be achieved by providing a good thermal path away from the thermal pad.

The PowerPAD package allows for both assembly and thermal management in one manufacturing operation. During the surface-mount solder operation (when the leads are being soldered), the thermal pad must be soldered to a copper area underneath the package. Through the use of thermal paths within this copper area, heat can be conducted away from the package into either a ground plane or other heat dissipating device.

Soldering the PowerPAD to the PCB is always required, even with applications that have low-power dissipation. This provides the necessary thermal and mechanical connection between the lead frame die pad and the PCB.

The PowerPAD package represents a breakthrough in combining the small area and ease of assembly of surface mount with mechanical methods of heatsinking.

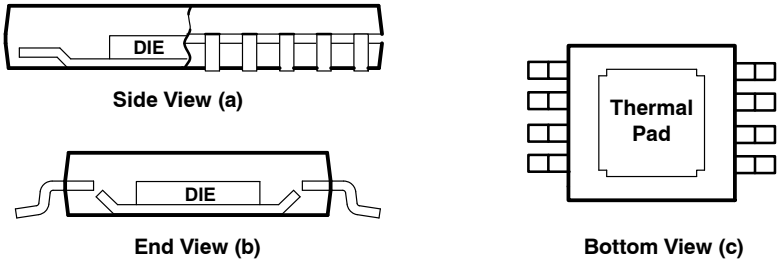

NOTE A: The thermal pad is electrically isolated from all terminals in the package.

Figure 52. Views of Thermally-Enhanced DGN Package

APPLICATION INFORMATION

Although there are many ways to properly heatsink the PowerPAD package, the following steps illustrate the recommended approach.

general PowerPAD design considerations (continued)

1. The thermal pad must be connected to the same voltage potential as the GND pin.
2. Prepare the PCB with a top side etch pattern as illustrated in the thermal land pattern mechanical drawing at the end of this document. There should be etch for the leads as well as etch for the thermal pad.
3. Place five holes (single and dual) or nine holes (quad) in the area of the thermal pad. These holes should be 13 mils in diameter. Keep them small so that solder wicking through the holes is not a problem during reflow.
4. Additional vias may be placed anywhere along the thermal plane outside of the thermal pad area. This helps dissipate the heat generated by the TLC07x IC. These additional vias may be larger than the 13-mil diameter vias directly under the thermal pad. They can be larger because they are not in the thermal pad area to be soldered so that wicking is not a problem.
5. Connect all holes to the internal ground plane that is the same potential as the device GND pin.
6. When connecting these holes to the ground plane, do not use the typical web or spoke via connection methodology. Web connections have a high thermal resistance connection that is useful for slowing the heat transfer during soldering operations. This makes the soldering of vias that have plane connections easier. In this application, however, low thermal resistance is desired for the most efficient heat transfer. Therefore, the holes under the TLC07x PowerPAD package should make their connection to the internal ground plane with a complete connection around the entire circumference of the plated-through hole.
7. The top-side solder mask should leave the terminals of the package and the thermal pad area with its five holes (dual) or nine holes (quad) exposed. The bottom-side solder mask should cover the five or nine holes of the thermal pad area. This prevents solder from being pulled away from the thermal pad area during the reflow process.
8. Apply solder paste to the exposed thermal pad area and all of the IC terminals.
9. With these preparatory steps in place, the TLC07x IC is simply placed in position and run through the solder reflow operation as any standard surface-mount component. This results in a part that is properly installed.

For a given θ_{JA}, the maximum power dissipation is shown in Figure 54 and is calculated by the following formula:

$$P_D = \left(\frac{T_{MAX} - T_A}{\theta_{JA}}\right)$$

Where:

P_D = Maximum power dissipation of TLC07x IC (watts)
T_{MAX} = Absolute maximum junction temperature (150°C)
T_A = Free-ambient air temperature (°C)
θ_{JA} = $\theta_{JC} + \theta_{CA}$
θ_{JC} = Thermal coefficient from junction to case
θ_{CA} = Thermal coefficient from case to ambient air (°C/W)

APPLICATION INFORMATION

general PowerPAD design considerations (continued)

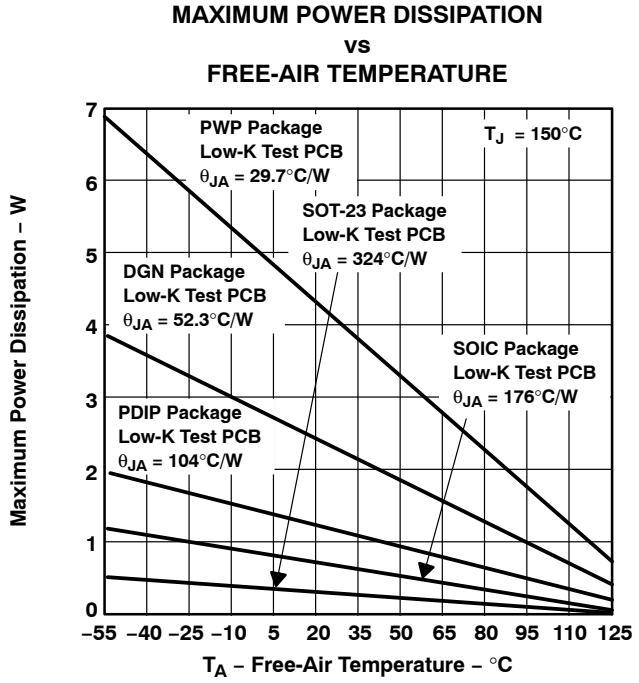

NOTE A: Results are with no air flow and using JEDEC Standard Low-K test PCB.

Figure 53. Maximum Power Dissipation vs Free-Air Temperature

The next consideration is the package constraints. The two sources of heat within an amplifier are quiescent power and output power. The designer should never forget about the quiescent heat generated within the device, especially multi-amplifier devices. Because these devices have linear output stages (Class A-B), most of the heat dissipation is at low output voltages with high output currents.

The other key factor when dealing with power dissipation is how the devices are mounted on the PCB. The PowerPAD devices are extremely useful for heat dissipation. But, the device should always be soldered to a copper plane to fully use the heat dissipation properties of the PowerPAD. The SOIC package, on the other hand, is highly dependent on how it is mounted on the PCB. As more trace and copper area is placed around the device, θ_{JA} decreases and the heat dissipation capability increases. The currents and voltages shown in these graphs are for the total package. For the dual or quad amplifier packages, the sum of the RMS output currents and voltages should be used to choose the proper package.

APPLICATION INFORMATION

macromodel information

Macromodel information provided was derived using Microsim *Parts*™, the model generation software used with Microsim *PSpice*™. The Boyle macromodel (see Note 1) and subcircuit in Figure 55 are generated using the TLC07x typical electrical and operating characteristics at T_A = 25°C. Using this information, output simulations of the following key parameters can be generated to a tolerance of 20% (in most cases):

- Maximum positive output voltage swing
- Maximum negative output voltage swing
- Slew rate
- Quiescent power dissipation
- Input bias current
- Open-loop voltage amplification
- Unity-gain frequency
- Common-mode rejection ratio
- Phase margin
- DC output resistance
- AC output resistance
- Short-circuit output current limit

NOTE 2: G. R. Boyle, B. M. Cohn, D. O. Pederson, and J. E. Solomon, “Macromodeling of Integrated Circuit Operational Amplifiers,” *IEEE Journal of Solid-State Circuits,* SC-9, 353 (1974).

PSpice and *Parts* are trademarks of MicroSim Corporation.

APPLICATION INFORMATION

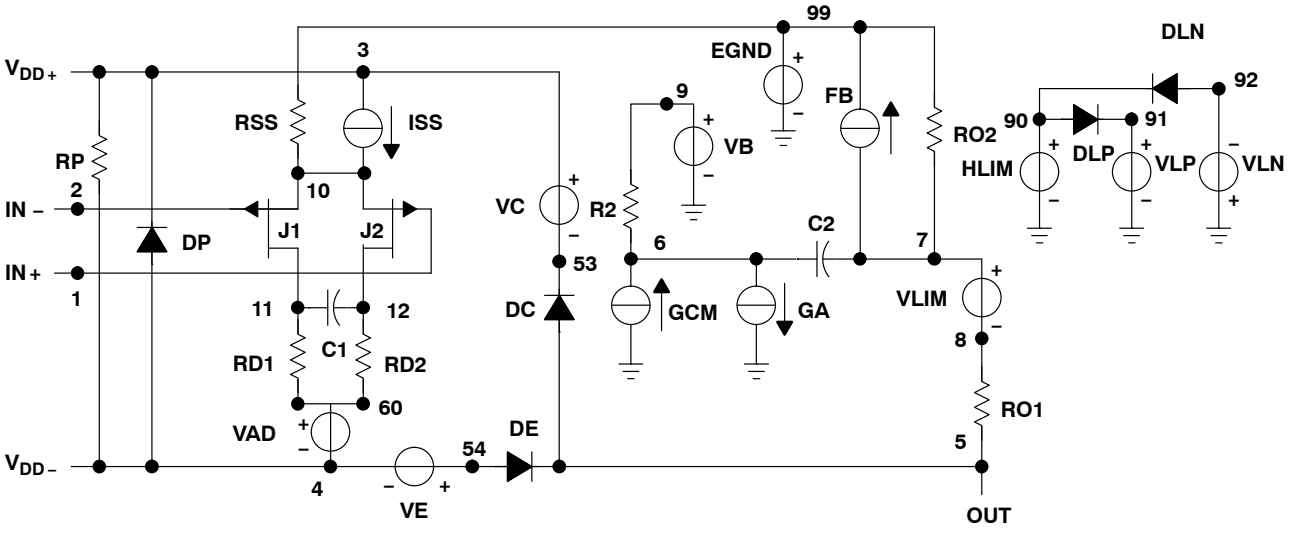


```
*DEVICE=TLC07X_5V, OPAMP, PJF, INT

* TLC07X – 5V operational amplifier "macromodel" subcircuit
* created using Parts release 8.0 on 12/16/99 at 08:38
* Parts is a MicroSim product.
*
* connections:          non-inverting input
*                       |  inverting input
*                       |  |  positive power supply
*                       |  |  |  negative power supply
*                       |  |  |  |  output
*                       |  |  |  |  |
.subckt TLC07X_5V  1 2 3 4 5
*
 c1     11  12 4.8697E–12
 c2     6   7  8.0000E–12
 css    10  99 4.0063E–12
 dc     5   53 dy
 de     54  5  dy
 dlp    90  91 dx
 dln    92  90 dx
 dp     4   3  dx
 egnd   99  0  poly(2) (3,0) (4,0) 0 .5 .5
 fb     7   99 poly(5) vb vc ve vlp vln 0 6.9132E6 –1E3 1E3
                6E6 –6E6
 ga     6   0  11   12 457.42E–6
 gcm    0   6  10   99 1.1293E–6
 iss    3   10 dc   183.67E–6
 ioff   0   6  dc   .806E–6
 hlim   90  0  vlim 1K
 j1     11  2  10   jx1
 j2     12  1  10   jx2
 r2     6   9      100.00E3
 rd1    4   11     2.1862E3
 rd2    4   12     2.1862E3
 ro1    8   5  10
 ro2    7   99 10
 rp     3   4      2.4728E3
 rss    10  99     1.0889E6
 vb     9   0  dc   0
 vc     3   53 dc   1.5410
 ve     54  4  dc   .84403
 vlim   7   8  dc   0
 vlp    91  0  dc   119
 vln    0   92 dc   119
.model  dx  D(Is=800.00E–18)
.model  dy  D(Is=800.00E–18 Rs=1m Cjo=10p)
.model  jx1 PJF(Is=117.50E–15 Beta=1.1391E–3  Vto=–1)
.model  jx2 PJF(Is=117.50E–15 Beta=1.1391E–3  Vto=–1)
.ends
```

Figure 54. Boyle Macromodel and Subcircuit

PACKAGING INFORMATION

Orderable part number	Status (1)	Material type (2)	Package | Pins	Package qty | Carrier	RoHS (3)	Lead finish/ Ball material (4)	MSL rating/ Peak reflow (5)	Op temp (°C)	Part marking (6)
TLC070AIP	Active	Production	PDIP (P) | 8	50 | TUBE	Yes	NIPDAU	N/A for Pkg Type	-40 to 125	TLC070AI
TLC070AIP.A	Active	Production	PDIP (P) | 8	50 | TUBE	Yes	NIPDAU	N/A for Pkg Type	-40 to 125	TLC070AI
TLC070CD	Active	Production	SOIC (D) | 8	75 | TUBE	Yes	NIPDAU	Level-1-260C-UNLIM	0 to 70	C070C
TLC070CD.A	Active	Production	SOIC (D) | 8	75 | TUBE	Yes	NIPDAU	Level-1-260C-UNLIM	0 to 70	C070C
TLC070CDR	Active	Production	SOIC (D) | 8	2500 | LARGE T&R	Yes	NIPDAU	Level-1-260C-UNLIM	0 to 70	C070C
TLC070CDR.A	Active	Production	SOIC (D) | 8	2500 | LARGE T&R	Yes	NIPDAU	Level-1-260C-UNLIM	0 to 70	C070C
TLC070IDR	Active	Production	SOIC (D) | 8	2500 | LARGE T&R	Yes	NIPDAU	Level-1-260C-UNLIM	-40 to 125	C070I
TLC070IDR.A	Active	Production	SOIC (D) | 8	2500 | LARGE T&R	Yes	NIPDAU	Level-1-260C-UNLIM	-40 to 125	C070I
TLC070IP	Active	Production	PDIP (P) | 8	50 | TUBE	Yes	NIPDAU	N/A for Pkg Type	-40 to 125	TLC070I
TLC070IP.A	Active	Production	PDIP (P) | 8	50 | TUBE	Yes	NIPDAU	N/A for Pkg Type	-40 to 125	TLC070I
TLC071AID	Active	Production	SOIC (D) | 8	75 | TUBE	Yes	NIPDAU	Level-1-260C-UNLIM	-40 to 125	C071AI
TLC071AID.A	Active	Production	SOIC (D) | 8	75 | TUBE	Yes	NIPDAU	Level-1-260C-UNLIM	-40 to 125	C071AI
TLC071AIP	Active	Production	PDIP (P) | 8	50 | TUBE	Yes	NIPDAU	N/A for Pkg Type	-40 to 125	TLC071AI
TLC071AIP.A	Active	Production	PDIP (P) | 8	50 | TUBE	Yes	NIPDAU	N/A for Pkg Type	-40 to 125	TLC071AI
TLC071CD	Active	Production	SOIC (D) | 8	75 | TUBE	Yes	NIPDAU	Level-1-260C-UNLIM	0 to 70	C071C
TLC071CD.A	Active	Production	SOIC (D) | 8	75 | TUBE	Yes	NIPDAU	Level-1-260C-UNLIM	0 to 70	C071C
TLC071CDG4	Active	Production	SOIC (D) | 8	75 | TUBE	-	Call TI	Call TI	0 to 70	
TLC071CDGN	Active	Production	HVSSOP (DGN) | 8	80 | TUBE	Yes	NIPDAU	Level-1-260C-UNLIM	0 to 70	ACU
TLC071CDGN.A	Active	Production	HVSSOP (DGN) | 8	80 | TUBE	Yes	NIPDAU	Level-1-260C-UNLIM	0 to 70	ACU
TLC071CDGNR	Active	Production	HVSSOP (DGN) | 8	2500 | LARGE T&R	Yes	NIPDAU	Level-1-260C-UNLIM	0 to 70	ACU
TLC071CDGNR.A	Active	Production	HVSSOP (DGN) | 8	2500 | LARGE T&R	Yes	NIPDAU	Level-1-260C-UNLIM	0 to 70	ACU
TLC071CDR	Active	Production	SOIC (D) | 8	2500 | LARGE T&R	Yes	NIPDAU	Level-1-260C-UNLIM	0 to 70	C071C
TLC071CDR.A	Active	Production	SOIC (D) | 8	2500 | LARGE T&R	Yes	NIPDAU	Level-1-260C-UNLIM	0 to 70	C071C
TLC071CP	Active	Production	PDIP (P) | 8	50 | TUBE	Yes	NIPDAU	N/A for Pkg Type	0 to 70	TLC071C
TLC071CP.A	Active	Production	PDIP (P) | 8	50 | TUBE	Yes	NIPDAU	N/A for Pkg Type	0 to 70	TLC071C
TLC071ID	Active	Production	SOIC (D) | 8	75 | TUBE	Yes	NIPDAU	Level-1-260C-UNLIM	-40 to 125	C071I
TLC071ID.A	Active	Production	SOIC (D) | 8	75 | TUBE	Yes	NIPDAU	Level-1-260C-UNLIM	-40 to 125	C071I
TLC071IDGN	Obsolete	Production	HVSSOP (DGN) | 8	-	-	Call TI	Call TI	-40 to 125	ACV
TLC071IDGNR	Active	Production	HVSSOP (DGN) | 8	2500 | LARGE T&R	Yes	NIPDAU	Level-1-260C-UNLIM	-40 to 125	ACV

Orderable part number	Status (1)	Material type (2)	Package | Pins	Package qty | Carrier	RoHS (3)	Lead finish/ Ball material (4)	MSL rating/ Peak reflow (5)	Op temp (°C)	Part marking (6)
TLC071IDGNR.A	Active	Production	HVSSOP (DGN) | 8	2500 | LARGE T&R	Yes	NIPDAU	Level-1-260C-UNLIM	-40 to 125	ACV
TLC071IDR	Active	Production	SOIC (D) | 8	2500 | LARGE T&R	Yes	NIPDAU	Level-1-260C-UNLIM	-40 to 125	C071I
TLC071IDR.A	Active	Production	SOIC (D) | 8	2500 | LARGE T&R	Yes	NIPDAU	Level-1-260C-UNLIM	-40 to 125	C071I
TLC071IP	Active	Production	PDIP (P) | 8	50 | TUBE	Yes	NIPDAU	N/A for Pkg Type	-40 to 125	TLC071I
TLC071IP.A	Active	Production	PDIP (P) | 8	50 | TUBE	Yes	NIPDAU	N/A for Pkg Type	-40 to 125	TLC071I
TLC072AID	Active	Production	SOIC (D) | 8	75 | TUBE	Yes	NIPDAU	Level-1-260C-UNLIM	-40 to 125	C072AI
TLC072AID.A	Active	Production	SOIC (D) | 8	75 | TUBE	Yes	NIPDAU	Level-1-260C-UNLIM	-40 to 125	C072AI
TLC072AID.B	Active	Production	SOIC (D) | 8	75 | TUBE	Yes	NIPDAU	Level-1-260C-UNLIM	-40 to 125	C072AI
TLC072AIDG4	Active	Production	SOIC (D) | 8	75 | TUBE	-	Call TI	Call TI	-40 to 125	
TLC072AIDR	Active	Production	SOIC (D) | 8	2500 | LARGE T&R	Yes	NIPDAU	Level-1-260C-UNLIM	-40 to 125	C072AI
TLC072AIDR.A	Active	Production	SOIC (D) | 8	2500 | LARGE T&R	Yes	NIPDAU	Level-1-260C-UNLIM	-40 to 125	C072AI
TLC072AIDR.B	Active	Production	SOIC (D) | 8	2500 | LARGE T&R	Yes	NIPDAU	Level-1-260C-UNLIM	-40 to 125	C072AI
TLC072AIP	Active	Production	PDIP (P) | 8	50 | TUBE	Yes	NIPDAU	N/A for Pkg Type	-40 to 125	C072AI
TLC072AIP.A	Active	Production	PDIP (P) | 8	50 | TUBE	Yes	NIPDAU	N/A for Pkg Type	-40 to 125	C072AI
TLC072CD	Active	Production	SOIC (D) | 8	75 | TUBE	Yes	NIPDAU	Level-1-260C-UNLIM	0 to 70	C072C
TLC072CD.A	Active	Production	SOIC (D) | 8	75 | TUBE	Yes	NIPDAU	Level-1-260C-UNLIM	0 to 70	C072C
TLC072CD.B	Active	Production	SOIC (D) | 8	75 | TUBE	Yes	NIPDAU	Level-1-260C-UNLIM	0 to 70	C072C
TLC072CDG4	Active	Production	SOIC (D) | 8	75 | TUBE	-	Call TI	Call TI	0 to 70	
TLC072CDGN	Active	Production	HVSSOP (DGN) | 8	80 | TUBE	Yes	NIPDAU	Level-1-260C-UNLIM	0 to 70	ADV
TLC072CDGN.A	Active	Production	HVSSOP (DGN) | 8	80 | TUBE	Yes	NIPDAU	Level-1-260C-UNLIM	0 to 70	ADV
TLC072CDGN.B	Active	Production	HVSSOP (DGN) | 8	80 | TUBE	Yes	NIPDAU	Level-1-260C-UNLIM	0 to 70	ADV
TLC072CDGNR	Active	Production	HVSSOP (DGN) | 8	2500 | LARGE T&R	Yes	NIPDAU	Level-1-260C-UNLIM	0 to 70	ADV
TLC072CDGNR.A	Active	Production	HVSSOP (DGN) | 8	2500 | LARGE T&R	Yes	NIPDAU	Level-1-260C-UNLIM	0 to 70	ADV
TLC072CDGNR.B	Active	Production	HVSSOP (DGN) | 8	2500 | LARGE T&R	Yes	NIPDAU	Level-1-260C-UNLIM	0 to 70	ADV
TLC072CDGNRG4	Active	Production	HVSSOP (DGN) | 8	2500 | LARGE T&R	-	Call TI	Call TI	0 to 70	
TLC072CDR	Active	Production	SOIC (D) | 8	2500 | LARGE T&R	Yes	NIPDAU	Level-1-260C-UNLIM	0 to 70	C072C
TLC072CDR.A	Active	Production	SOIC (D) | 8	2500 | LARGE T&R	Yes	NIPDAU	Level-1-260C-UNLIM	0 to 70	C072C
TLC072CDR.B	Active	Production	SOIC (D) | 8	2500 | LARGE T&R	Yes	NIPDAU	Level-1-260C-UNLIM	0 to 70	C072C
TLC072CDRG4	Active	Production	SOIC (D) | 8	2500 | LARGE T&R	-	Call TI	Call TI	0 to 70	
TLC072CP	Active	Production	PDIP (P) | 8	50 | TUBE	Yes	NIPDAU	N/A for Pkg Type	0 to 70	C072C
TLC072CP.A	Active	Production	PDIP (P) | 8	50 | TUBE	Yes	NIPDAU	N/A for Pkg Type	0 to 70	C072C

Orderable part number	Status (1)	Material type (2)	Package | Pins	Package qty | Carrier	RoHS (3)	Lead finish/ Ball material (4)	MSL rating/ Peak reflow (5)	Op temp (°C)	Part marking (6)
TLC072CP.B	Active	Production	PDIP (P) | 8	50 | TUBE	Yes	NIPDAU	N/A for Pkg Type	0 to 70	C072C
TLC072ID	Active	Production	SOIC (D) | 8	75 | TUBE	Yes	NIPDAU	Level-1-260C-UNLIM	-40 to 125	C072I
TLC072ID.A	Active	Production	SOIC (D) | 8	75 | TUBE	Yes	NIPDAU	Level-1-260C-UNLIM	-40 to 125	C072I
TLC072ID.B	Active	Production	SOIC (D) | 8	75 | TUBE	Yes	NIPDAU	Level-1-260C-UNLIM	-40 to 125	C072I
TLC072IDGN	Active	Production	HVSSOP (DGN) | 8	80 | TUBE	Yes	NIPDAU	Level-1-260C-UNLIM	-40 to 125	ADW
TLC072IDGN.A	Active	Production	HVSSOP (DGN) | 8	80 | TUBE	Yes	NIPDAU	Level-1-260C-UNLIM	-40 to 125	ADW
TLC072IDGN.B	Active	Production	HVSSOP (DGN) | 8	80 | TUBE	Yes	NIPDAU	Level-1-260C-UNLIM	-40 to 125	ADW
TLC072IDGNR	Active	Production	HVSSOP (DGN) | 8	2500 | LARGE T&R	Yes	NIPDAU	Level-1-260C-UNLIM	-40 to 125	ADW
TLC072IDGNR.A	Active	Production	HVSSOP (DGN) | 8	2500 | LARGE T&R	Yes	NIPDAU	Level-1-260C-UNLIM	-40 to 125	ADW
TLC072IDGNR.B	Active	Production	HVSSOP (DGN) | 8	2500 | LARGE T&R	Yes	NIPDAU	Level-1-260C-UNLIM	-40 to 125	ADW
TLC072IDR	Active	Production	SOIC (D) | 8	2500 | LARGE T&R	Yes	NIPDAU	Level-1-260C-UNLIM	-40 to 125	C072I
TLC072IDR.A	Active	Production	SOIC (D) | 8	2500 | LARGE T&R	Yes	NIPDAU	Level-1-260C-UNLIM	-40 to 125	C072I
TLC072IDR.B	Active	Production	SOIC (D) | 8	2500 | LARGE T&R	Yes	NIPDAU	Level-1-260C-UNLIM	-40 to 125	C072I
TLC072IP	Active	Production	PDIP (P) | 8	50 | TUBE	Yes	NIPDAU	N/A for Pkg Type	-40 to 125	C072I
TLC072IP.A	Active	Production	PDIP (P) | 8	50 | TUBE	Yes	NIPDAU	N/A for Pkg Type	-40 to 125	C072I
TLC073AID	Active	Production	SOIC (D) | 14	50 | TUBE	Yes	NIPDAU	Level-1-260C-UNLIM	-40 to 125	CO73AI
TLC073AID.A	Active	Production	SOIC (D) | 14	50 | TUBE	Yes	NIPDAU	Level-1-260C-UNLIM	-40 to 125	CO73AI
TLC073CDGQ	Active	Production	HVSSOP (DGQ) | 10	80 | TUBE	Yes	NIPDAU	Level-1-260C-UNLIM	0 to 70	ADX
TLC073CDGQ.A	Active	Production	HVSSOP (DGQ) | 10	80 | TUBE	Yes	NIPDAU	Level-1-260C-UNLIM	0 to 70	ADX
TLC073CDGQ.B	Active	Production	HVSSOP (DGQ) | 10	80 | TUBE	Yes	NIPDAU	Level-1-260C-UNLIM	0 to 70	ADX
TLC073CDR	Active	Production	SOIC (D) | 14	2500 | LARGE T&R	Yes	NIPDAU	Level-1-260C-UNLIM	0 to 70	C073C
TLC073CDR.A	Active	Production	SOIC (D) | 14	2500 | LARGE T&R	Yes	NIPDAU	Level-1-260C-UNLIM	0 to 70	C073C
TLC073IDGQ	Active	Production	HVSSOP (DGQ) | 10	80 | TUBE	Yes	NIPDAU	Level-1-260C-UNLIM	-40 to 125	ADY
TLC073IDGQ.A	Active	Production	HVSSOP (DGQ) | 10	80 | TUBE	Yes	NIPDAU	Level-1-260C-UNLIM	-40 to 125	ADY
TLC073IDGQ.B	Active	Production	HVSSOP (DGQ) | 10	80 | TUBE	Yes	NIPDAU	Level-1-260C-UNLIM	-40 to 125	ADY
TLC073IDGQR	Active	Production	HVSSOP (DGQ) | 10	2500 | LARGE T&R	Yes	NIPDAU	Level-1-260C-UNLIM	-40 to 125	ADY
TLC073IDGQR.A	Active	Production	HVSSOP (DGQ) | 10	2500 | LARGE T&R	Yes	NIPDAU	Level-1-260C-UNLIM	-40 to 125	ADY
TLC073IDGQR.B	Active	Production	HVSSOP (DGQ) | 10	2500 | LARGE T&R	Yes	NIPDAU	Level-1-260C-UNLIM	-40 to 125	ADY
TLC073IN	Active	Production	PDIP (N) | 14	25 | TUBE	Yes	NIPDAU	N/A for Pkg Type	-40 to 125	C073I
TLC073IN.A	Active	Production	PDIP (N) | 14	25 | TUBE	Yes	NIPDAU	N/A for Pkg Type	-40 to 125	C073I
TLC074AID	Active	Production	SOIC (D) | 14	50 | TUBE	Yes	NIPDAU	Level-1-260C-UNLIM	-40 to 125	TLC074AI

Orderable part number	Status (1)	Material type (2)	Package | Pins	Package qty | Carrier	RoHS (3)	Lead finish/ Ball material (4)	MSL rating/ Peak reflow (5)	Op temp (°C)	Part marking (6)
TLC074AID.A	Active	Production	SOIC (D) | 14	50 | TUBE	Yes	NIPDAU	Level-1-260C-UNLIM	-40 to 125	TLC074AI
TLC074AID.B	Active	Production	SOIC (D) | 14	50 | TUBE	Yes	NIPDAU	Level-1-260C-UNLIM	-40 to 125	TLC074AI
TLC074AIDR	Active	Production	SOIC (D) | 14	2500 | LARGE T&R	Yes	NIPDAU	Level-1-260C-UNLIM	-40 to 125	TLC074AI
TLC074AIDR.A	Active	Production	SOIC (D) | 14	2500 | LARGE T&R	Yes	NIPDAU	Level-1-260C-UNLIM	-40 to 125	TLC074AI
TLC074AIDR.B	Active	Production	SOIC (D) | 14	2500 | LARGE T&R	Yes	NIPDAU	Level-1-260C-UNLIM	-40 to 125	TLC074AI
TLC074AIN	Active	Production	PDIP (N) | 14	25 | TUBE	Yes	NIPDAU	N/A for Pkg Type	-40 to 125	TLC074AI
TLC074AIN.A	Active	Production	PDIP (N) | 14	25 | TUBE	Yes	NIPDAU	N/A for Pkg Type	-40 to 125	TLC074AI
TLC074CD	Active	Production	SOIC (D) | 14	50 | TUBE	Yes	NIPDAU	Level-1-260C-UNLIM	0 to 70	TLC074C
TLC074CD.A	Active	Production	SOIC (D) | 14	50 | TUBE	Yes	NIPDAU	Level-1-260C-UNLIM	0 to 70	TLC074C
TLC074CD.B	Active	Production	SOIC (D) | 14	50 | TUBE	Yes	NIPDAU	Level-1-260C-UNLIM	0 to 70	TLC074C
TLC074CDR	Active	Production	SOIC (D) | 14	2500 | LARGE T&R	Yes	NIPDAU	Level-1-260C-UNLIM	0 to 70	TLC074C
TLC074CDR.A	Active	Production	SOIC (D) | 14	2500 | LARGE T&R	Yes	NIPDAU	Level-1-260C-UNLIM	0 to 70	TLC074C
TLC074CDR.B	Active	Production	SOIC (D) | 14	2500 | LARGE T&R	Yes	NIPDAU	Level-1-260C-UNLIM	0 to 70	TLC074C
TLC074CN	Active	Production	PDIP (N) | 14	25 | TUBE	Yes	NIPDAU	N/A for Pkg Type	0 to 70	TLC074C
TLC074CN.A	Active	Production	PDIP (N) | 14	25 | TUBE	Yes	NIPDAU	N/A for Pkg Type	0 to 70	TLC074C
TLC074CPWP	Active	Production	HTSSOP (PWP) | 20	70 | TUBE	Yes	NIPDAU	Level-2-260C-1 YEAR	0 to 70	TLC074C
TLC074CPWP.A	Active	Production	HTSSOP (PWP) | 20	70 | TUBE	Yes	NIPDAU	Level-2-260C-1 YEAR	0 to 70	TLC074C
TLC074CPWP.B	Active	Production	HTSSOP (PWP) | 20	70 | TUBE	Yes	NIPDAU	Level-2-260C-1 YEAR	0 to 70	TLC074C
TLC074CPWPR	Active	Production	HTSSOP (PWP) | 20	2000 | LARGE T&R	Yes	NIPDAU	Level-2-260C-1 YEAR	0 to 70	TLC074C
TLC074CPWPR.A	Active	Production	HTSSOP (PWP) | 20	2000 | LARGE T&R	Yes	NIPDAU	Level-2-260C-1 YEAR	0 to 70	TLC074C
TLC074CPWPR.B	Active	Production	HTSSOP (PWP) | 20	2000 | LARGE T&R	Yes	NIPDAU	Level-2-260C-1 YEAR	0 to 70	TLC074C
TLC074ID	Active	Production	SOIC (D) | 14	50 | TUBE	Yes	NIPDAU	Level-1-260C-UNLIM	-40 to 125	TLC074I
TLC074ID.A	Active	Production	SOIC (D) | 14	50 | TUBE	Yes	NIPDAU	Level-1-260C-UNLIM	-40 to 125	TLC074I
TLC074ID.B	Active	Production	SOIC (D) | 14	50 | TUBE	Yes	NIPDAU	Level-1-260C-UNLIM	-40 to 125	TLC074I
TLC074IDR	Active	Production	SOIC (D) | 14	2500 | LARGE T&R	Yes	NIPDAU	Level-1-260C-UNLIM	-40 to 125	TLC074I
TLC074IDR.A	Active	Production	SOIC (D) | 14	2500 | LARGE T&R	Yes	NIPDAU	Level-1-260C-UNLIM	-40 to 125	TLC074I
TLC074IDR.B	Active	Production	SOIC (D) | 14	2500 | LARGE T&R	Yes	NIPDAU	Level-1-260C-UNLIM	-40 to 125	TLC074I
TLC074IN	Active	Production	PDIP (N) | 14	25 | TUBE	Yes	NIPDAU	N/A for Pkg Type	-40 to 125	TLC074I
TLC074IN.A	Active	Production	PDIP (N) | 14	25 | TUBE	Yes	NIPDAU	N/A for Pkg Type	-40 to 125	TLC074I
TLC074IN.B	Active	Production	PDIP (N) | 14	25 | TUBE	Yes	NIPDAU	N/A for Pkg Type	-40 to 125	TLC074I
TLC074IPWP	Active	Production	HTSSOP (PWP) | 20	70 | TUBE	Yes	NIPDAU	Level-2-260C-1 YEAR	-40 to 125	TLC074I

Orderable part number	Status (1)	Material type (2)	Package | Pins	Package qty | Carrier	RoHS (3)	Lead finish/ Ball material (4)	MSL rating/ Peak reflow (5)	Op temp (°C)	Part marking (6)
TLC074IPWP.A	Active	Production	HTSSOP (PWP) | 20	70 | TUBE	Yes	NIPDAU	Level-2-260C-1 YEAR	-40 to 125	TLC074I
TLC074IPWP.B	Active	Production	HTSSOP (PWP) | 20	70 | TUBE	Yes	NIPDAU	Level-2-260C-1 YEAR	-40 to 125	TLC074I
TLC075AID	Active	Production	SOIC (D) | 16	40 | TUBE	Yes	NIPDAU	Level-1-260C-UNLIM	-40 to 125	TLC075AI
TLC075AID.A	Active	Production	SOIC (D) | 16	40 | TUBE	Yes	NIPDAU	Level-1-260C-UNLIM	-40 to 125	TLC075AI
TLC075AID.B	Active	Production	SOIC (D) | 16	40 | TUBE	Yes	NIPDAU	Level-1-260C-UNLIM	-40 to 125	TLC075AI
TLC075AIN	Active	Production	PDIP (N) | 16	25 | TUBE	Yes	NIPDAU	N/A for Pkg Type	-40 to 125	TLC075AI
TLC075AIN.A	Active	Production	PDIP (N) | 16	25 | TUBE	Yes	NIPDAU	N/A for Pkg Type	-40 to 125	TLC075AI
TLC075AIPWP	Active	Production	HTSSOP (PWP) | 20	70 | TUBE	Yes	NIPDAU	Level-2-260C-1 YEAR	-40 to 125	TLC075AI
TLC075AIPWP.A	Active	Production	HTSSOP (PWP) | 20	70 | TUBE	Yes	NIPDAU	Level-2-260C-1 YEAR	-40 to 125	TLC075AI
TLC075CPWP	Active	Production	HTSSOP (PWP) | 20	70 | TUBE	Yes	NIPDAU	Level-2-260C-1 YEAR	0 to 70	TLC075C
TLC075CPWP.A	Active	Production	HTSSOP (PWP) | 20	70 | TUBE	Yes	NIPDAU	Level-2-260C-1 YEAR	0 to 70	TLC075C
TLC075IPWP	Active	Production	HTSSOP (PWP) | 20	70 | TUBE	Yes	NIPDAU	Level-2-260C-1 YEAR	-40 to 125	TLC075I
TLC075IPWP.A	Active	Production	HTSSOP (PWP) | 20	70 | TUBE	Yes	NIPDAU	Level-2-260C-1 YEAR	-40 to 125	TLC075I
TLC075IPWP.B	Active	Production	HTSSOP (PWP) | 20	70 | TUBE	Yes	NIPDAU	Level-2-260C-1 YEAR	-40 to 125	TLC075I

(1) **Status:** For more details on status, see our product life cycle.

(2) **Material type:** When designated, preproduction parts are prototypes/experimental devices, and are not yet approved or released for full production. Testing and final process, including without limitation quality assurance, reliability performance testing, and/or process qualification, may not yet be complete, and this item is subject to further changes or possible discontinuation. If available for ordering, purchases will be subject to an additional waiver at checkout, and are intended for early internal evaluation purposes only. These items are sold without warranties of any kind.

(3) **RoHS values:** Yes, No, RoHS Exempt. See the TI RoHS Statement for additional information and value definition.

(4) **Lead finish/Ball material:** Parts may have multiple material finish options. Finish options are separated by a vertical ruled line. Lead finish/Ball material values may wrap to two lines if the finish value exceeds the maximum column width.

(5) **MSL rating/Peak reflow:** The moisture sensitivity level ratings and peak solder (reflow) temperatures. In the event that a part has multiple moisture sensitivity ratings, only the lowest level per JEDEC standards is shown. Refer to the shipping label for the actual reflow temperature that will be used to mount the part to the printed circuit board.

(6) **Part marking:** There may be an additional marking, which relates to the logo, the lot trace code information, or the environmental category of the part.

Multiple part markings will be inside parentheses. Only one part marking contained in parentheses and separated by a "~" will appear on a part. If a line is indented then it is a continuation of the previous line and the two combined represent the entire part marking for that device.

Important Information and Disclaimer: The information provided on this page represents TI's knowledge and belief as of the date that it is provided. TI bases its knowledge and belief on information provided by third parties, and makes no representation or warranty as to the accuracy of such information. Efforts are underway to better integrate information from third parties. TI has taken and continues to take reasonable steps to provide representative and accurate information but may not have conducted destructive testing or chemical analysis on incoming materials and chemicals. TI and TI suppliers consider certain information to be proprietary, and thus CAS numbers and other limited information may not be available for release.

In no event shall TI's liability arising out of such information exceed the total purchase price of the TI part(s) at issue in this document sold by TI to Customer on an annual basis.

OTHER QUALIFIED VERSIONS OF TLC072 :

- Automotive : TLC072-Q1

NOTE: Qualified Version Definitions:

- Automotive - Q100 devices qualified for high-reliability automotive applications targeting zero defects

TAPE AND REEL INFORMATION

REEL DIMENSIONS

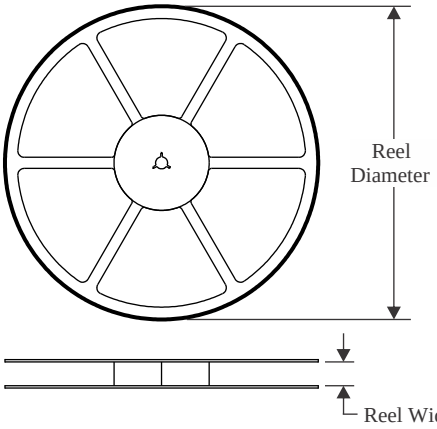

TAPE DIMENSIONS

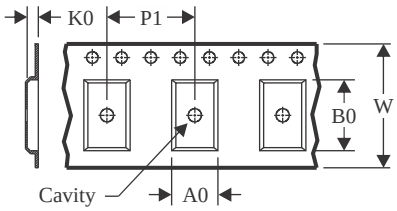

A0	Dimension designed to accommodate the component width
B0	Dimension designed to accommodate the component length
K0	Dimension designed to accommodate the component thickness
W	Overall width of the carrier tape
P1	Pitch between successive cavity centers

QUADRANT ASSIGNMENTS FOR PIN 1 ORIENTATION IN TAPE

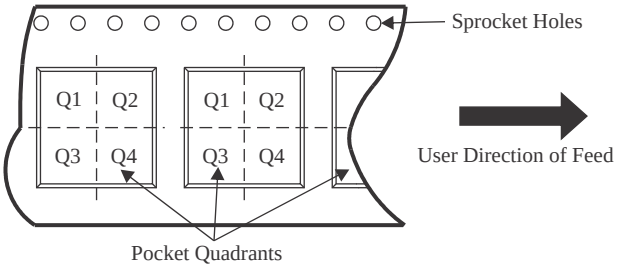

*All dimensions are nominal

Device	Package Type	Package Drawing	Pins	SPQ	Reel Diameter (mm)	Reel Width W1 (mm)	A0 (mm)	B0 (mm)	K0 (mm)	P1 (mm)	W (mm)	Pin1 Quadrant
TLC070CDR	SOIC	D	8	2500	330.0	12.4	6.4	5.2	2.1	8.0	12.0	Q1
TLC070IDR	SOIC	D	8	2500	330.0	12.4	6.4	5.2	2.1	8.0	12.0	Q1
TLC071CDGNR	HVSSOP	DGN	8	2500	330.0	12.4	5.3	3.4	1.4	8.0	12.0	Q1
TLC071CDR	SOIC	D	8	2500	330.0	12.4	6.4	5.2	2.1	8.0	12.0	Q1
TLC071IDGNR	HVSSOP	DGN	8	2500	330.0	12.4	5.3	3.4	1.4	8.0	12.0	Q1
TLC071IDR	SOIC	D	8	2500	330.0	12.4	6.4	5.2	2.1	8.0	12.0	Q1
TLC072AIDR	SOIC	D	8	2500	330.0	12.4	6.4	5.2	2.1	8.0	12.0	Q1
TLC072CDGNR	HVSSOP	DGN	8	2500	330.0	12.4	5.3	3.4	1.4	8.0	12.0	Q1
TLC072CDR	SOIC	D	8	2500	330.0	12.4	6.4	5.2	2.1	8.0	12.0	Q1
TLC072IDGNR	HVSSOP	DGN	8	2500	330.0	12.4	5.3	3.4	1.4	8.0	12.0	Q1
TLC072IDR	SOIC	D	8	2500	330.0	12.4	6.4	5.2	2.1	8.0	12.0	Q1
TLC073CDR	SOIC	D	14	2500	330.0	16.4	6.5	9.0	2.1	8.0	16.0	Q1
TLC073IDGQR	HVSSOP	DGQ	10	2500	330.0	12.4	5.3	3.4	1.4	8.0	12.0	Q1
TLC074AIDR	SOIC	D	14	2500	330.0	16.4	6.5	9.0	2.1	8.0	16.0	Q1
TLC074CDR	SOIC	D	14	2500	330.0	16.4	6.5	9.0	2.1	8.0	16.0	Q1
TLC074CPWPR	HTSSOP	PWP	20	2000	330.0	16.4	6.95	7.1	1.6	8.0	16.0	Q1

Device	Package Type	Package Drawing	Pins	SPQ	Reel Diameter (mm)	Reel Width W1 (mm)	A0 (mm)	B0 (mm)	K0 (mm)	P1 (mm)	W (mm)	Pin1 Quadrant
TLC074IDR	SOIC	D	14	2500	330.0	16.4	6.5	9.0	2.1	8.0	16.0	Q1

TAPE AND REEL BOX DIMENSIONS

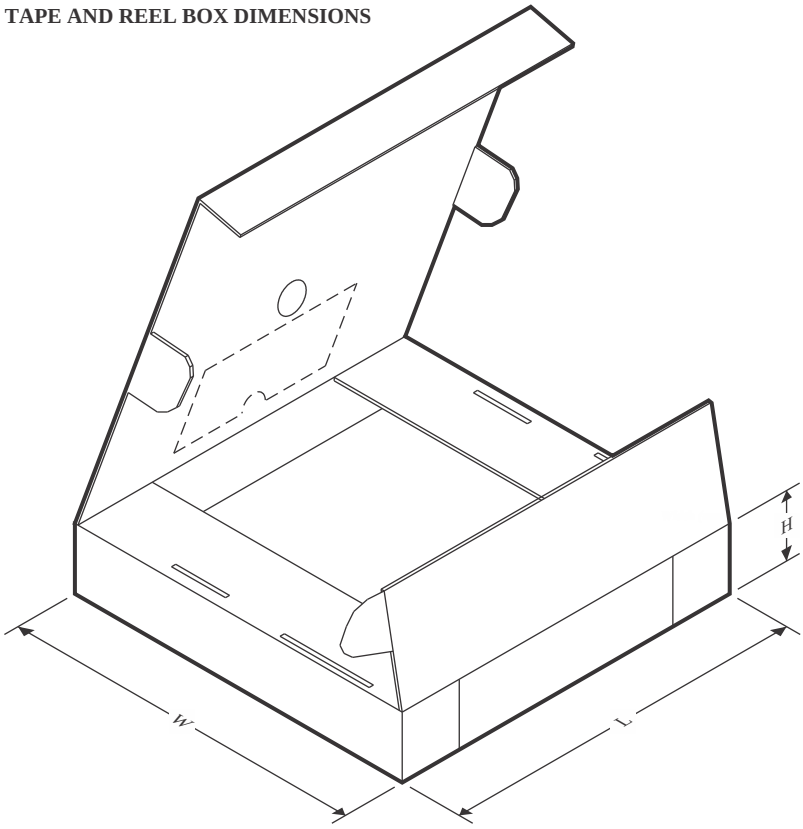

*All dimensions are nominal

Device	Package Type	Package Drawing	Pins	SPQ	Length (mm)	Width (mm)	Height (mm)
TLC070CDR	SOIC	D	8	2500	340.5	338.1	20.6
TLC070IDR	SOIC	D	8	2500	340.5	338.1	20.6
TLC071CDGNR	HVSSOP	DGN	8	2500	358.0	335.0	35.0
TLC071CDR	SOIC	D	8	2500	353.0	353.0	32.0
TLC071IDGNR	HVSSOP	DGN	8	2500	358.0	335.0	35.0
TLC071IDR	SOIC	D	8	2500	353.0	353.0	32.0
TLC072AIDR	SOIC	D	8	2500	353.0	353.0	32.0
TLC072CDGNR	HVSSOP	DGN	8	2500	358.0	335.0	35.0
TLC072CDR	SOIC	D	8	2500	353.0	353.0	32.0
TLC072IDGNR	HVSSOP	DGN	8	2500	358.0	335.0	35.0
TLC072IDR	SOIC	D	8	2500	353.0	353.0	32.0
TLC073CDR	SOIC	D	14	2500	350.0	350.0	43.0
TLC073IDGQR	HVSSOP	DGQ	10	2500	358.0	335.0	35.0
TLC074AIDR	SOIC	D	14	2500	350.0	350.0	43.0
TLC074CDR	SOIC	D	14	2500	353.0	353.0	32.0
TLC074CPWPR	HTSSOP	PWP	20	2000	350.0	350.0	43.0
TLC074IDR	SOIC	D	14	2500	350.0	350.0	43.0

TUBE

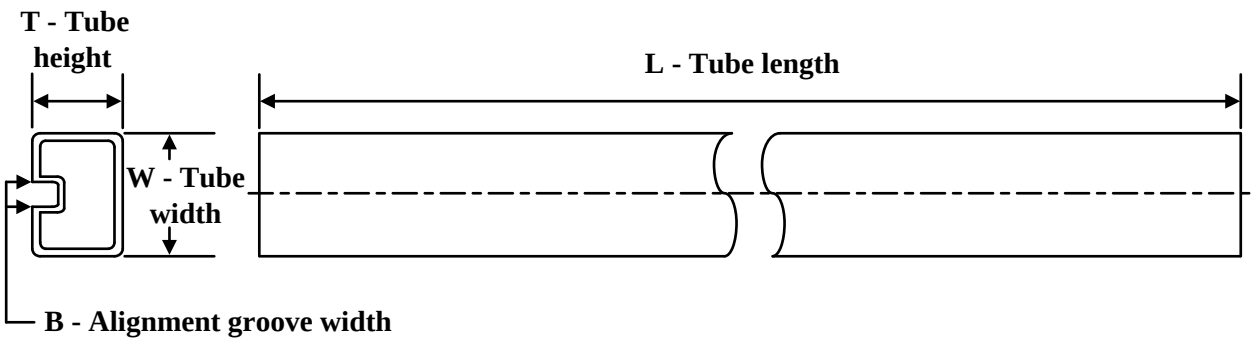

*All dimensions are nominal

Device	Package Name	Package Type	Pins	SPQ	L (mm)	W (mm)	T (µm)	B (mm)
TLC070AIP	P	PDIP	8	50	506	13.97	11230	4.32
TLC070AIP.A	P	PDIP	8	50	506	13.97	11230	4.32
TLC070CD	D	SOIC	8	75	507	8	3940	4.32
TLC070CD	D	SOIC	8	75	505.46	6.76	3810	4
TLC070CD.A	D	SOIC	8	75	505.46	6.76	3810	4
TLC070CD.A	D	SOIC	8	75	507	8	3940	4.32
TLC070IP	P	PDIP	8	50	506	13.97	11230	4.32
TLC070IP.A	P	PDIP	8	50	506	13.97	11230	4.32
TLC071AID	D	SOIC	8	75	507	8	3940	4.32
TLC071AID.A	D	SOIC	8	75	507	8	3940	4.32
TLC071AIP	P	PDIP	8	50	506	13.97	11230	4.32
TLC071AIP.A	P	PDIP	8	50	506	13.97	11230	4.32
TLC071CD	D	SOIC	8	75	507	8	3940	4.32
TLC071CD.A	D	SOIC	8	75	507	8	3940	4.32
TLC071CDGN	DGN	HVSSOP	8	80	274	6.2	2540	2.5
TLC071CDGN.A	DGN	HVSSOP	8	80	274	6.2	2540	2.5
TLC071CP	P	PDIP	8	50	506	13.97	11230	4.32
TLC071CP.A	P	PDIP	8	50	506	13.97	11230	4.32
TLC071ID	D	SOIC	8	75	505.46	6.76	3810	4
TLC071ID	D	SOIC	8	75	507	8	3940	4.32
TLC071ID.A	D	SOIC	8	75	507	8	3940	4.32
TLC071ID.A	D	SOIC	8	75	505.46	6.76	3810	4
TLC071IP	P	PDIP	8	50	506	13.97	11230	4.32
TLC071IP.A	P	PDIP	8	50	506	13.97	11230	4.32
TLC072AID	D	SOIC	8	75	505.46	6.76	3810	4
TLC072AID	D	SOIC	8	75	507	8	3940	4.32
TLC072AID.A	D	SOIC	8	75	505.46	6.76	3810	4
TLC072AID.A	D	SOIC	8	75	507	8	3940	4.32
TLC072AID.B	D	SOIC	8	75	505.46	6.76	3810	4

Device	Package Name	Package Type	Pins	SPQ	L (mm)	W (mm)	T (µm)	B (mm)
TLC072AID.B	D	SOIC	8	75	507	8	3940	4.32
TLC072AIP	P	PDIP	8	50	506	13.97	11230	4.32
TLC072AIP.A	P	PDIP	8	50	506	13.97	11230	4.32
TLC072CD	D	SOIC	8	75	505.46	6.76	3810	4
TLC072CD	D	SOIC	8	75	507	8	3940	4.32
TLC072CD.A	D	SOIC	8	75	505.46	6.76	3810	4
TLC072CD.A	D	SOIC	8	75	507	8	3940	4.32
TLC072CD.B	D	SOIC	8	75	507	8	3940	4.32
TLC072CD.B	D	SOIC	8	75	505.46	6.76	3810	4
TLC072CDGN	DGN	HVSSOP	8	80	274	6.2	2540	2.5
TLC072CDGN.A	DGN	HVSSOP	8	80	274	6.2	2540	2.5
TLC072CDGN.B	DGN	HVSSOP	8	80	274	6.2	2540	2.5
TLC072CP	P	PDIP	8	50	506	13.97	11230	4.32
TLC072CP.A	P	PDIP	8	50	506	13.97	11230	4.32
TLC072CP.B	P	PDIP	8	50	506	13.97	11230	4.32
TLC072ID	D	SOIC	8	75	507	8	3940	4.32
TLC072ID	D	SOIC	8	75	505.46	6.76	3810	4
TLC072ID.A	D	SOIC	8	75	505.46	6.76	3810	4
TLC072ID.A	D	SOIC	8	75	507	8	3940	4.32
TLC072ID.B	D	SOIC	8	75	505.46	6.76	3810	4
TLC072ID.B	D	SOIC	8	75	507	8	3940	4.32
TLC072IDGN	DGN	HVSSOP	8	80	274	6.2	2540	2.5
TLC072IDGN.A	DGN	HVSSOP	8	80	274	6.2	2540	2.5
TLC072IDGN.B	DGN	HVSSOP	8	80	274	6.2	2540	2.5
TLC072IP	P	PDIP	8	50	506	13.97	11230	4.32
TLC072IP.A	P	PDIP	8	50	506	13.97	11230	4.32
TLC073AID	D	SOIC	14	50	505.46	6.76	3810	4
TLC073AID.A	D	SOIC	14	50	505.46	6.76	3810	4
TLC073CDGQ	DGQ	HVSSOP	10	80	274	6.2	2540	2.5
TLC073CDGQ.A	DGQ	HVSSOP	10	80	274	6.2	2540	2.5
TLC073CDGQ.B	DGQ	HVSSOP	10	80	274	6.2	2540	2.5
TLC073IDGQ	DGQ	HVSSOP	10	80	274	6.2	2540	2.5
TLC073IDGQ.A	DGQ	HVSSOP	10	80	274	6.2	2540	2.5
TLC073IDGQ.B	DGQ	HVSSOP	10	80	274	6.2	2540	2.5
TLC073IN	N	PDIP	14	25	506	13.97	11230	4.32
TLC073IN.A	N	PDIP	14	25	506	13.97	11230	4.32
TLC074AID	D	SOIC	14	50	505.46	6.76	3810	4
TLC074AID.A	D	SOIC	14	50	505.46	6.76	3810	4
TLC074AID.B	D	SOIC	14	50	505.46	6.76	3810	4
TLC074AIN	N	PDIP	14	25	506	13.97	11230	4.32
TLC074AIN.A	N	PDIP	14	25	506	13.97	11230	4.32
TLC074CD	D	SOIC	14	50	507	8	3940	4.32
TLC074CD	D	SOIC	14	50	505.46	6.76	3810	4

Device	Package Name	Package Type	Pins	SPQ	L (mm)	W (mm)	T (µm)	B (mm)
TLC074CD.A	D	SOIC	14	50	507	8	3940	4.32
TLC074CD.A	D	SOIC	14	50	505.46	6.76	3810	4
TLC074CD.B	D	SOIC	14	50	505.46	6.76	3810	4
TLC074CD.B	D	SOIC	14	50	507	8	3940	4.32
TLC074CN	N	PDIP	14	25	506	13.97	11230	4.32
TLC074CN.A	N	PDIP	14	25	506	13.97	11230	4.32
TLC074CPWP	PWP	HTSSOP	20	70	530	10.2	3600	3.5
TLC074CPWP.A	PWP	HTSSOP	20	70	530	10.2	3600	3.5
TLC074CPWP.B	PWP	HTSSOP	20	70	530	10.2	3600	3.5
TLC074ID	D	SOIC	14	50	505.46	6.76	3810	4
TLC074ID.A	D	SOIC	14	50	505.46	6.76	3810	4
TLC074ID.B	D	SOIC	14	50	505.46	6.76	3810	4
TLC074IN	N	PDIP	14	25	506	13.97	11230	4.32
TLC074IN.A	N	PDIP	14	25	506	13.97	11230	4.32
TLC074IN.B	N	PDIP	14	25	506	13.97	11230	4.32
TLC074IPWP	PWP	HTSSOP	20	70	530	10.2	3600	3.5
TLC074IPWP.A	PWP	HTSSOP	20	70	530	10.2	3600	3.5
TLC074IPWP.B	PWP	HTSSOP	20	70	530	10.2	3600	3.5
TLC075AID	D	SOIC	16	40	505.46	6.76	3810	4
TLC075AID.A	D	SOIC	16	40	505.46	6.76	3810	4
TLC075AID.B	D	SOIC	16	40	505.46	6.76	3810	4
TLC075AIN	N	PDIP	16	25	506	13.97	11230	4.32
TLC075AIN.A	N	PDIP	16	25	506	13.97	11230	4.32
TLC075AIPWP	PWP	HTSSOP	20	70	530	10.2	3600	3.5
TLC075AIPWP.A	PWP	HTSSOP	20	70	530	10.2	3600	3.5
TLC075CPWP	PWP	HTSSOP	20	70	530	10.2	3600	3.5
TLC075CPWP.A	PWP	HTSSOP	20	70	530	10.2	3600	3.5
TLC075IPWP	PWP	HTSSOP	20	70	530	10.2	3600	3.5
TLC075IPWP.A	PWP	HTSSOP	20	70	530	10.2	3600	3.5
TLC075IPWP.B	PWP	HTSSOP	20	70	530	10.2	3600	3.5

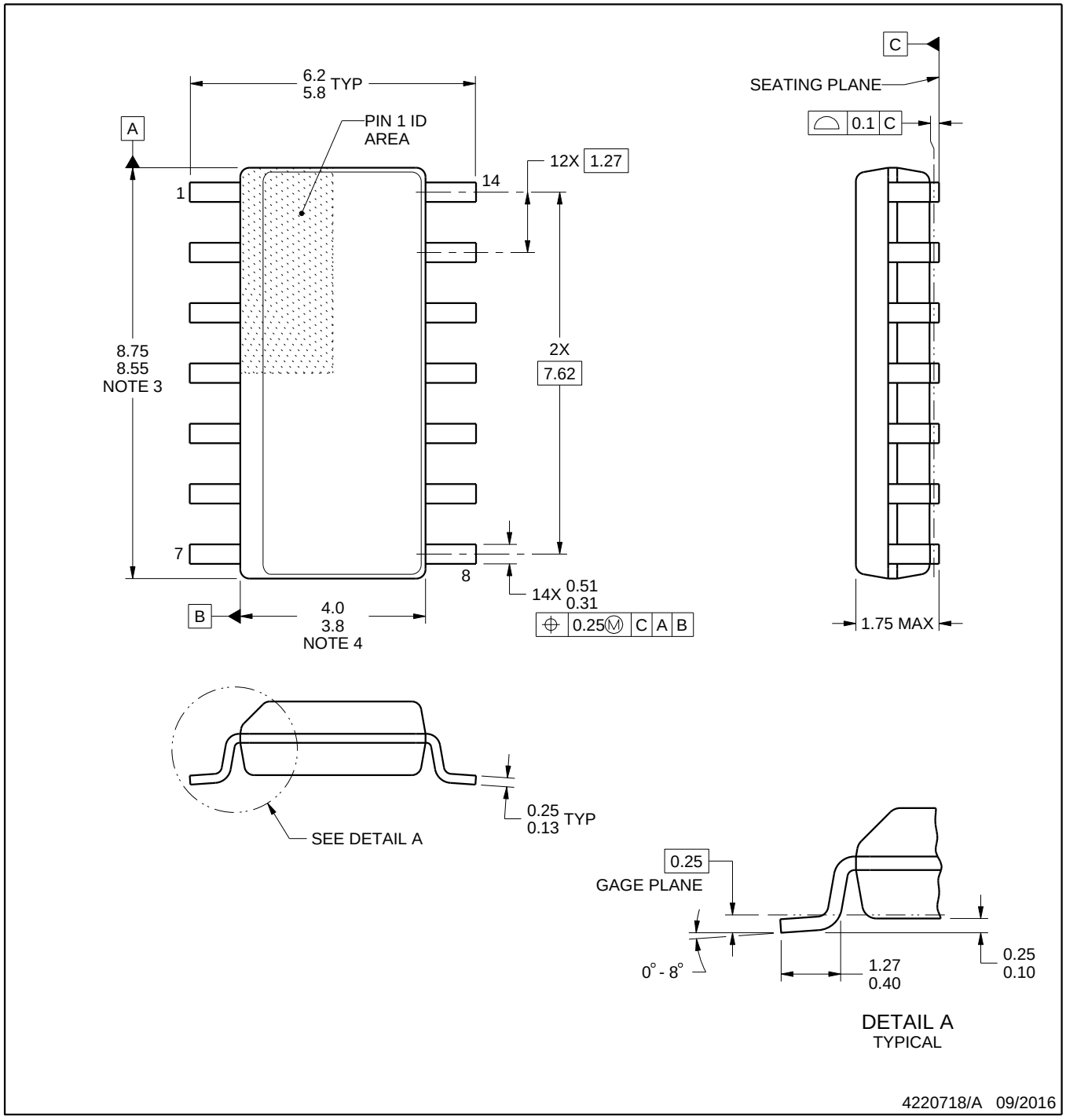

NOTES:

1. All linear dimensions are in millimeters. Dimensions in parenthesis are for reference only. Dimensioning and tolerancing per ASME Y14.5M.
2. This drawing is subject to change without notice.
3. This dimension does not include mold flash, protrusions, or gate burrs. Mold flash, protrusions, or gate burrs shall not exceed 0.15 mm, per side.
4. This dimension does not include interlead flash. Interlead flash shall not exceed 0.43 mm, per side.
5. Reference JEDEC registration MS-012, variation AB.

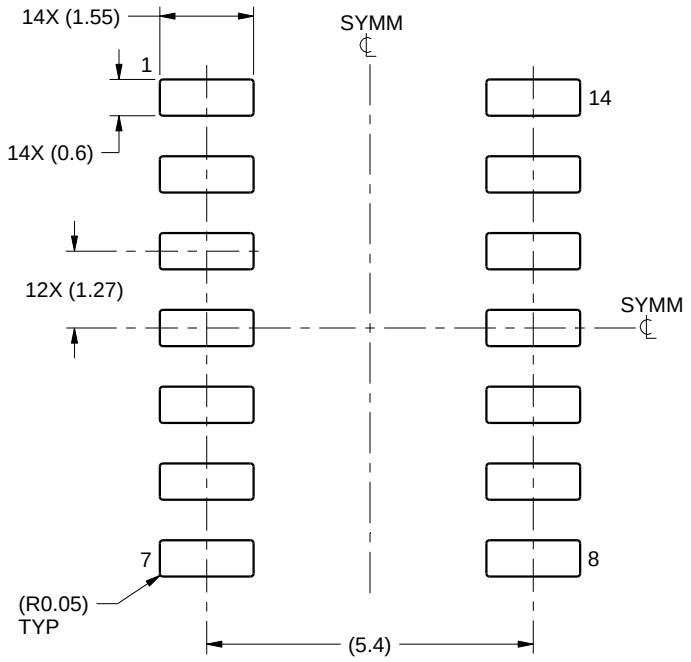

LAND PATTERN EXAMPLE
SCALE:8X

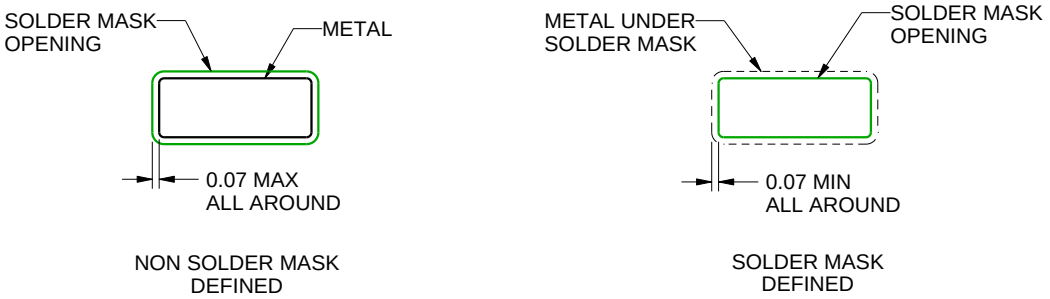

SOLDER MASK DETAILS

4220718/A 09/2016

NOTES: (continued)

6. Publication IPC-7351 may have alternate designs.
7. Solder mask tolerances between and around signal pads can vary based on board fabrication site.

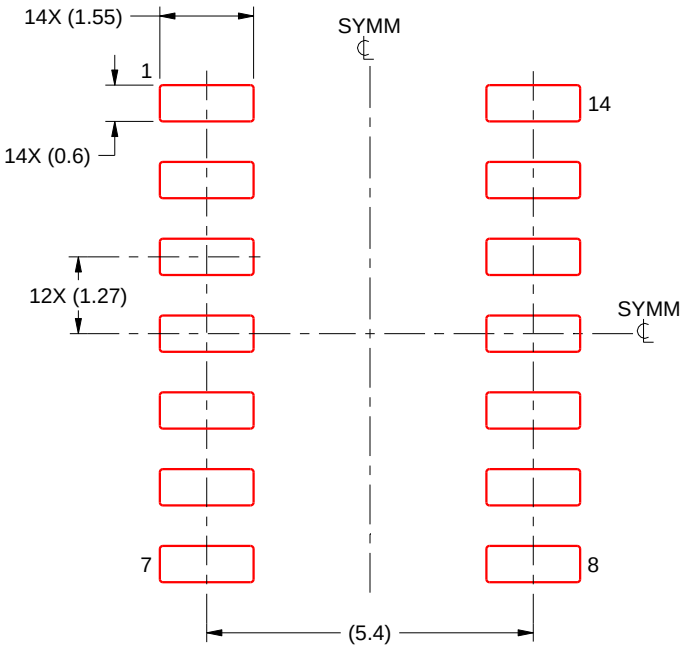

SOLDER PASTE EXAMPLE
BASED ON 0.125 mm THICK STENCIL
SCALE:8X

4220718/A 09/2016

NOTES: (continued)

8. Laser cutting apertures with trapezoidal walls and rounded corners may offer better paste release. IPC-7525 may have alternate design recommendations.
9. Board assembly site may have different recommendations for stencil design.

D (R–PDSO–G16) PLASTIC SMALL OUTLINE

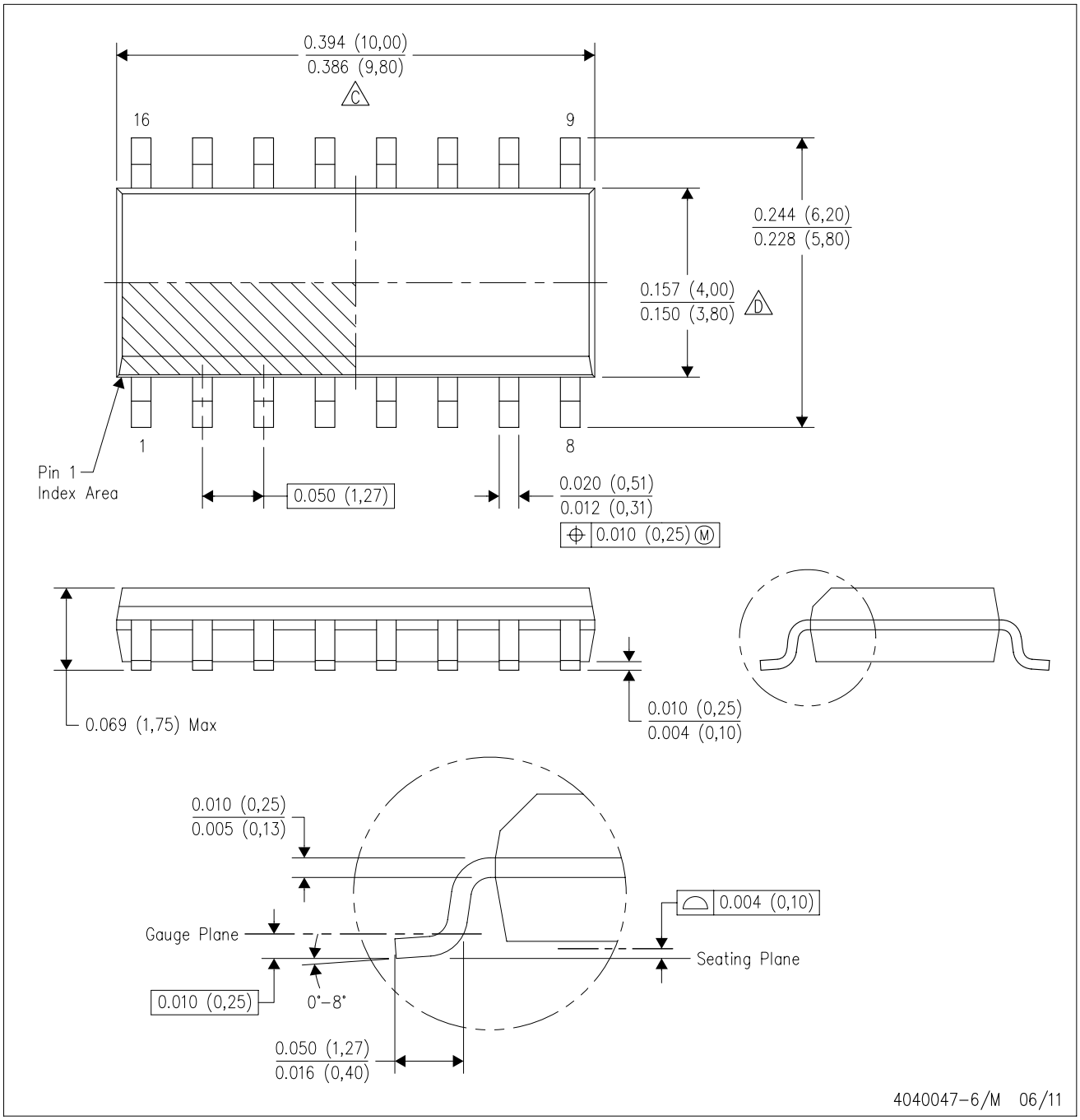

NOTES:
A. All linear dimensions are in inches (millimeters).
B. This drawing is subject to change without notice.
C. Body length does not include mold flash, protrusions, or gate burrs. Mold flash, protrusions, or gate burrs shall not exceed 0.006 (0,15) each side.
D. Body width does not include interlead flash. Interlead flash shall not exceed 0.017 (0,43) each side.
E. Reference JEDEC MS–012 variation AC.

GENERIC PACKAGE VIEW

DGQ 10

PowerPAD™ HVSSOP - 1.1 mm max height

3 x 3, 0.5 mm pitch

PLASTIC SMALL OUTLINE

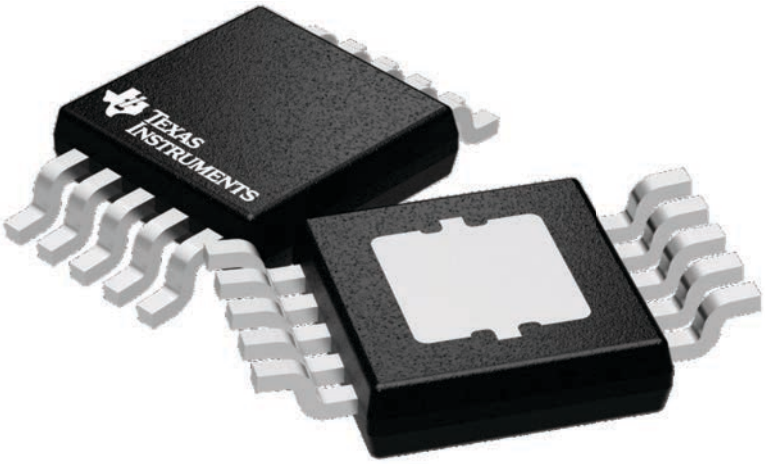

Images above are just a representation of the package family, actual package may vary.
Refer to the product data sheet for package details.

4224775/A

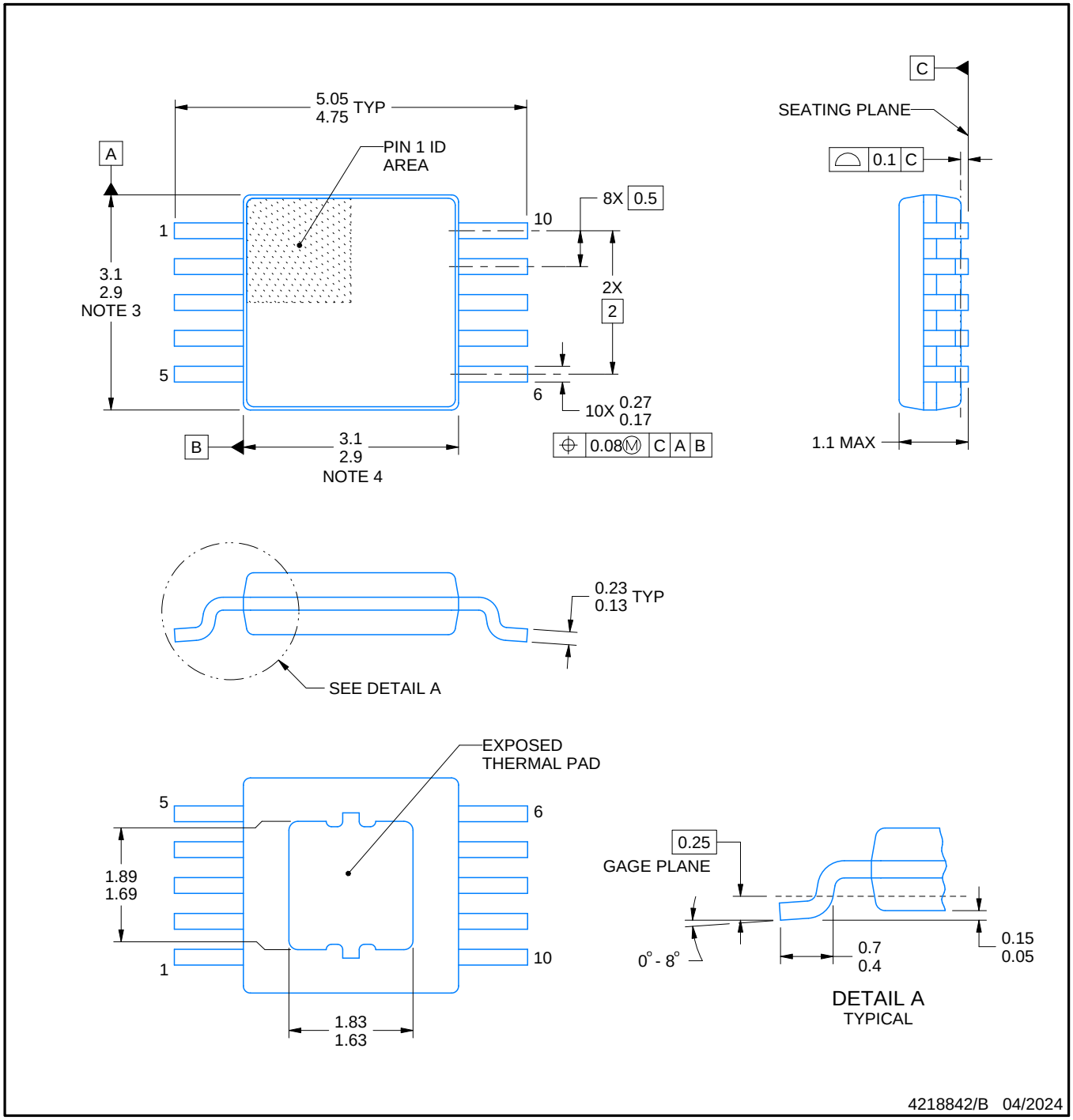

PowerPAD is a trademark of Texas Instruments.

NOTES:

1. All linear dimensions are in millimeters. Any dimensions in parenthesis are for reference only. Dimensioning and tolerancing per ASME Y14.5M.
2. This drawing is subject to change without notice.
3. This dimension does not include mold flash, protrusions, or gate burrs. Mold flash, protrusions, or gate burrs shall not exceed 0.15 mm per side.
4. This dimension does not include interlead flash. Interlead flash shall not exceed 0.25 mm per side.
5. Reference JEDEC registration MO-187, variation BA-T.

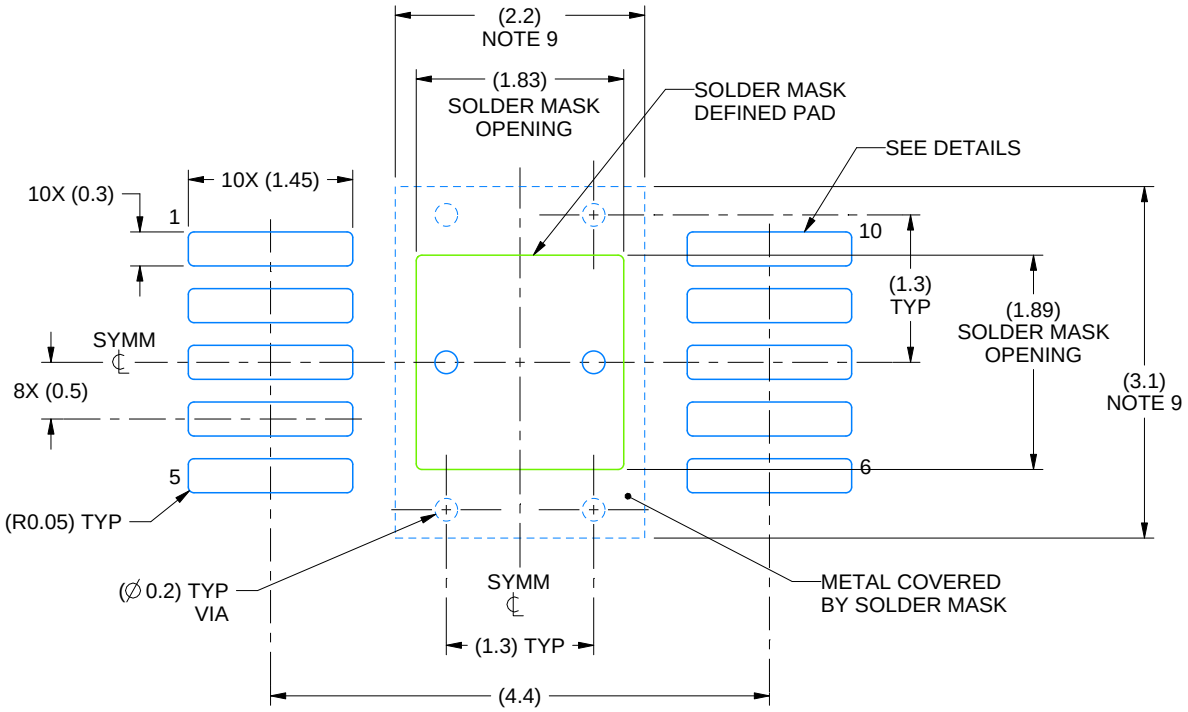

LAND PATTERN EXAMPLE
SCALE:15X

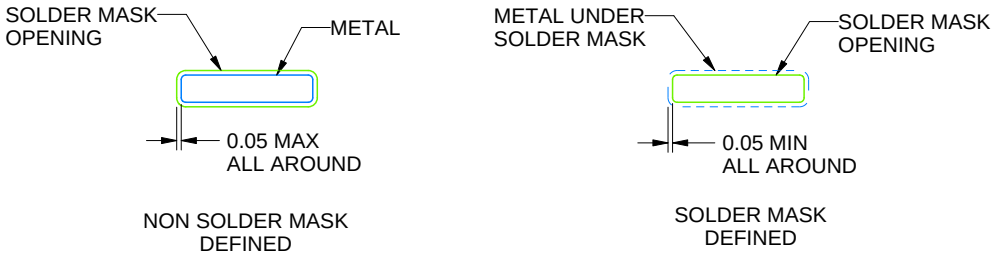

SOLDER MASK DETAILS

4218842/B 04/2024

NOTES: (continued)

6. Publication IPC-7351 may have alternate designs.
7. Solder mask tolerances between and around signal pads can vary based on board fabrication site.
8. This package is designed to be soldered to a thermal pad on the board. For more information, see Texas Instruments literature numbers SLMA002 (www.ti.com/lit/slma002) and SLMA004 (www.ti.com/lit/slma004).
9. Size of metal pad may vary due to creepage requirement.

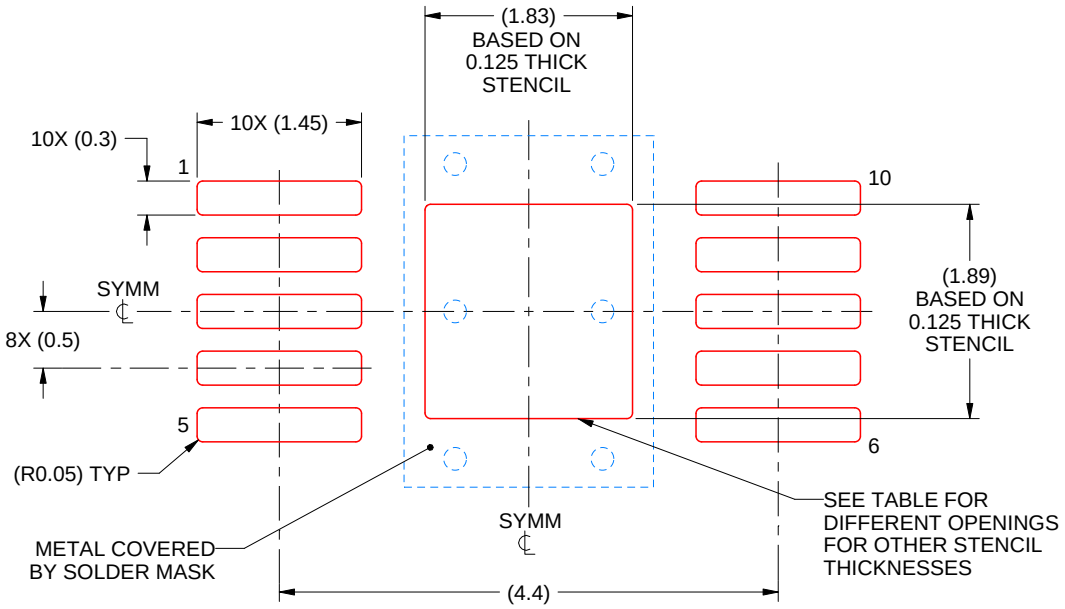

SOLDER PASTE EXAMPLE
EXPOSED PAD
100% PRINTED SOLDER COVERAGE BY AREA
SCALE:15X

STENCIL THICKNESS	SOLDER STENCIL OPENING
0.1	2.05 X 2.11
0.125	1.83 X 1.89 (SHOWN)
0.150	1.67 X 1.73
0.175	1.55 X 1.60

4218842/B 04/2024

NOTES: (continued)

10. Laser cutting apertures with trapezoidal walls and rounded corners may offer better paste release. IPC-7525 may have alternate design recommendations.
11. Board assembly site may have different recommendations for stencil design.

GENERIC PACKAGE VIEW

DGN 8

PowerPAD™ HVSSOP - 1.1 mm max height

3 x 3, 0.65 mm pitch

SMALL OUTLINE PACKAGE

This image is a representation of the package family, actual package may vary.
Refer to the product data sheet for package details.

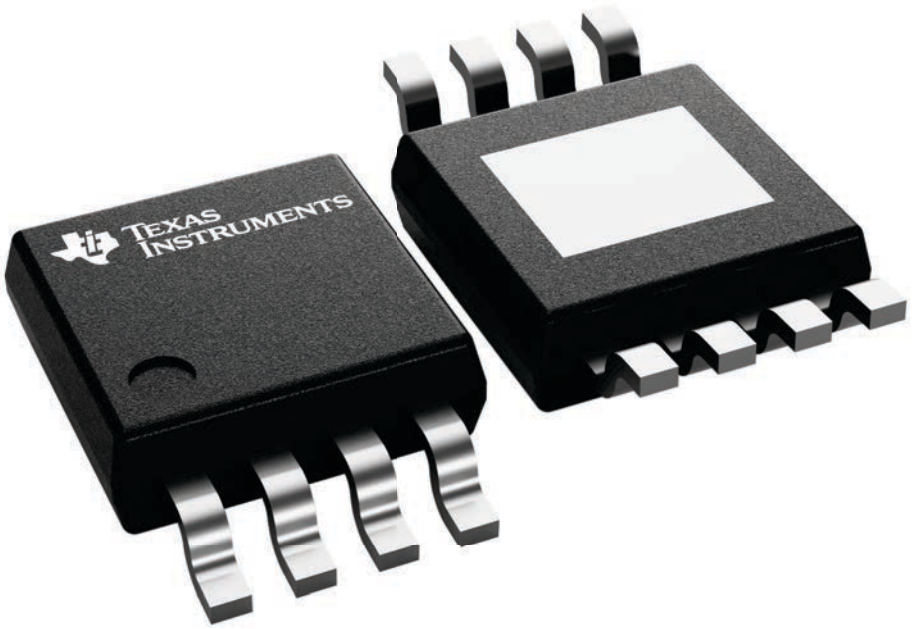

4225482/B

PACKAGE OUTLINE

DGN0008D

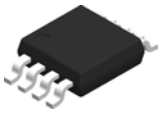

PowerPAD™ VSSOP - 1.1 mm max height

SMALL OUTLINE PACKAGE

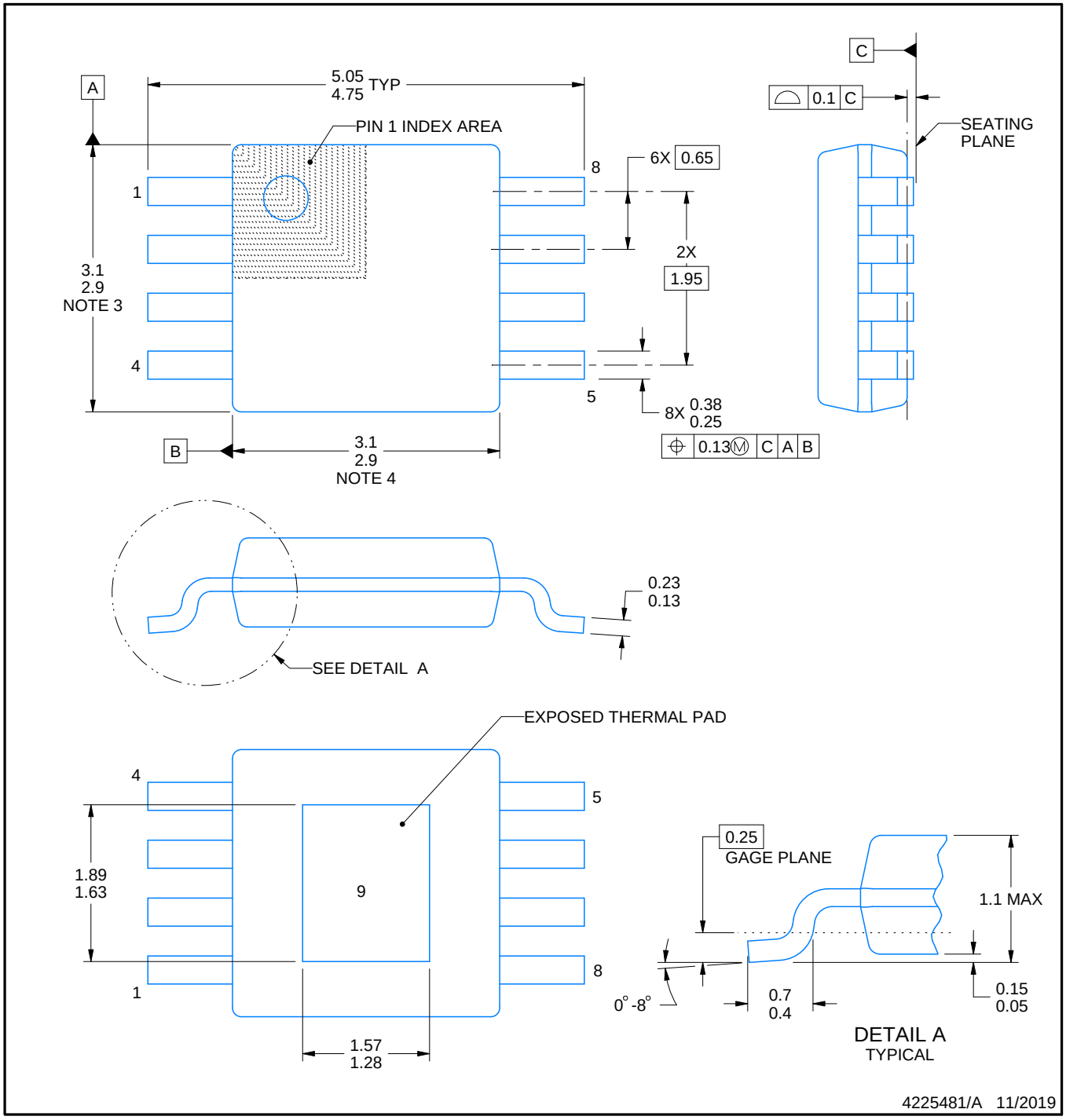

PowerPAD is a trademark of Texas Instruments.

NOTES:

1. All linear dimensions are in millimeters. Any dimensions in parenthesis are for reference only. Dimensioning and tolerancing per ASME Y14.5M.
2. This drawing is subject to change without notice.
3. This dimension does not include mold flash, protrusions, or gate burrs. Mold flash, protrusions, or gate burrs shall not exceed 0.15 mm per side.
4. This dimension does not include interlead flash. Interlead flash shall not exceed 0.25 mm per side.
5. Reference JEDEC registration MO-187.

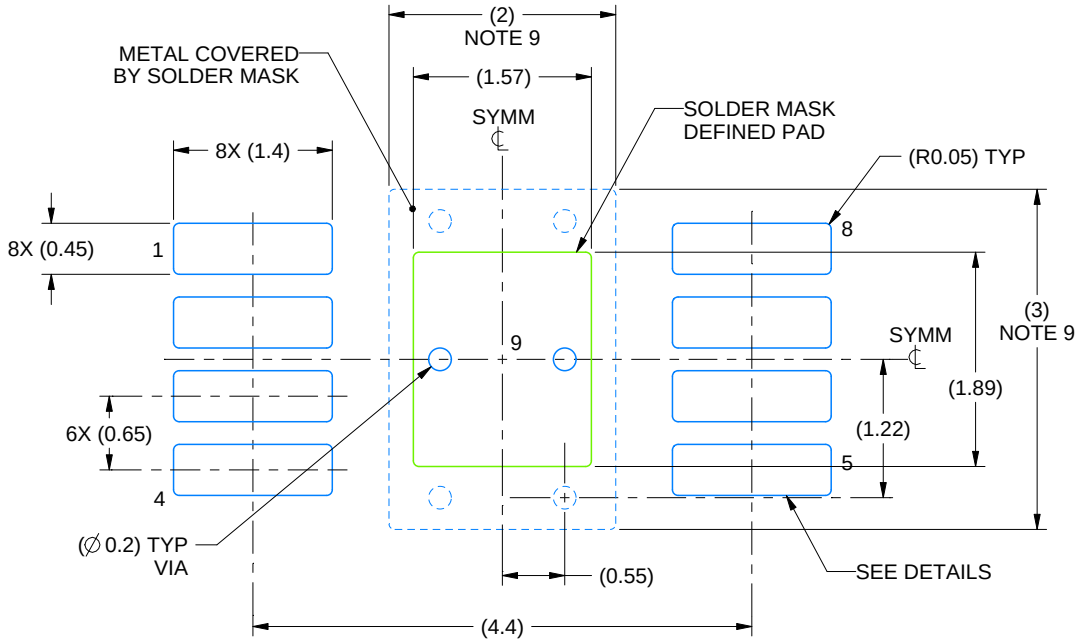

LAND PATTERN EXAMPLE
EXPOSED METAL SHOWN
SCALE: 15X

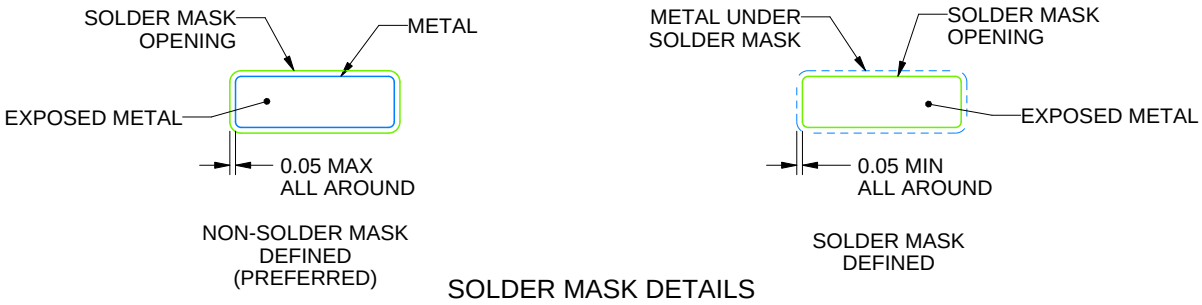

SOLDER MASK DETAILS

4225481/A 11/2019

NOTES: (continued)

6. Publication IPC-7351 may have alternate designs.
7. Solder mask tolerances between and around signal pads can vary based on board fabrication site.
8. Vias are optional depending on application, refer to device data sheet. If any vias are implemented, refer to their locations shown on this view. It is recommended that vias under paste be filled, plugged or tented.
9. Size of metal pad may vary due to creepage requirement.

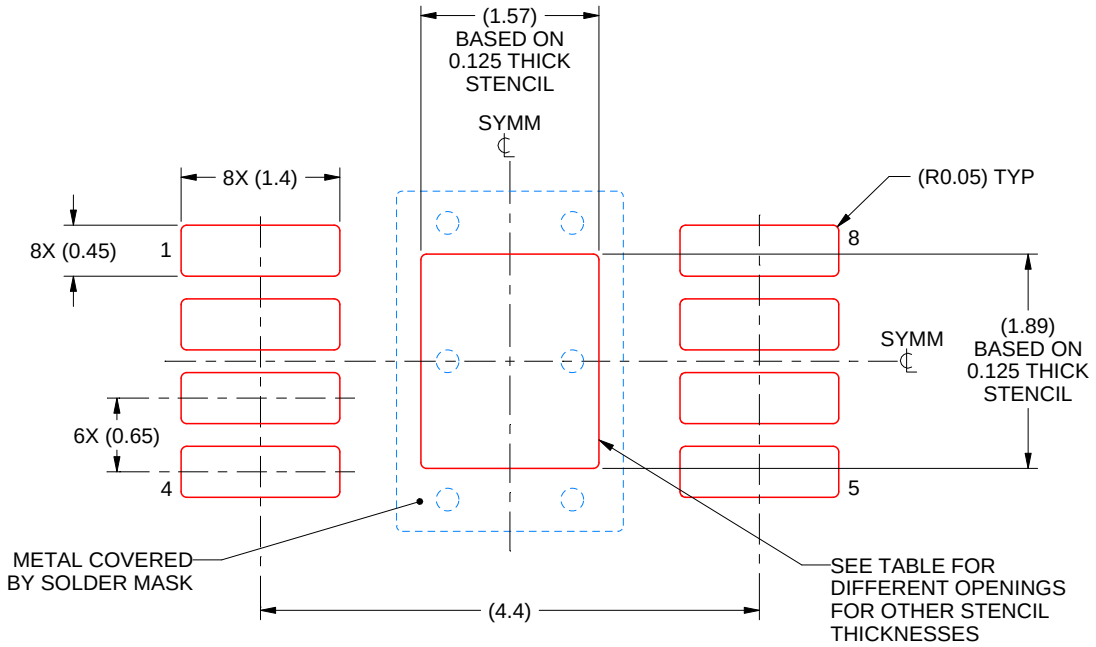

SOLDER PASTE EXAMPLE
EXPOSED PAD 9:
100% PRINTED SOLDER COVERAGE BY AREA
SCALE: 15X

STENCIL THICKNESS	SOLDER STENCIL OPENING
0.1	1.76 X 2.11
0.125	1.57 X 1.89 (SHOWN)
0.15	1.43 X 1.73
0.175	1.33 X 1.60

4225481/A 11/2019

NOTES: (continued)

10. Laser cutting apertures with trapezoidal walls and rounded corners may offer better paste release. IPC-7525 may have alternate design recommendations.
11. Board assembly site may have different recommendations for stencil design.

GENERIC PACKAGE VIEW

PWP 20

HTSSOP - 1.2 mm max height

6.5 x 4.4, 0.65 mm pitch

SMALL OUTLINE PACKAGE

This image is a representation of the package family, actual package may vary.
Refer to the product data sheet for package details.

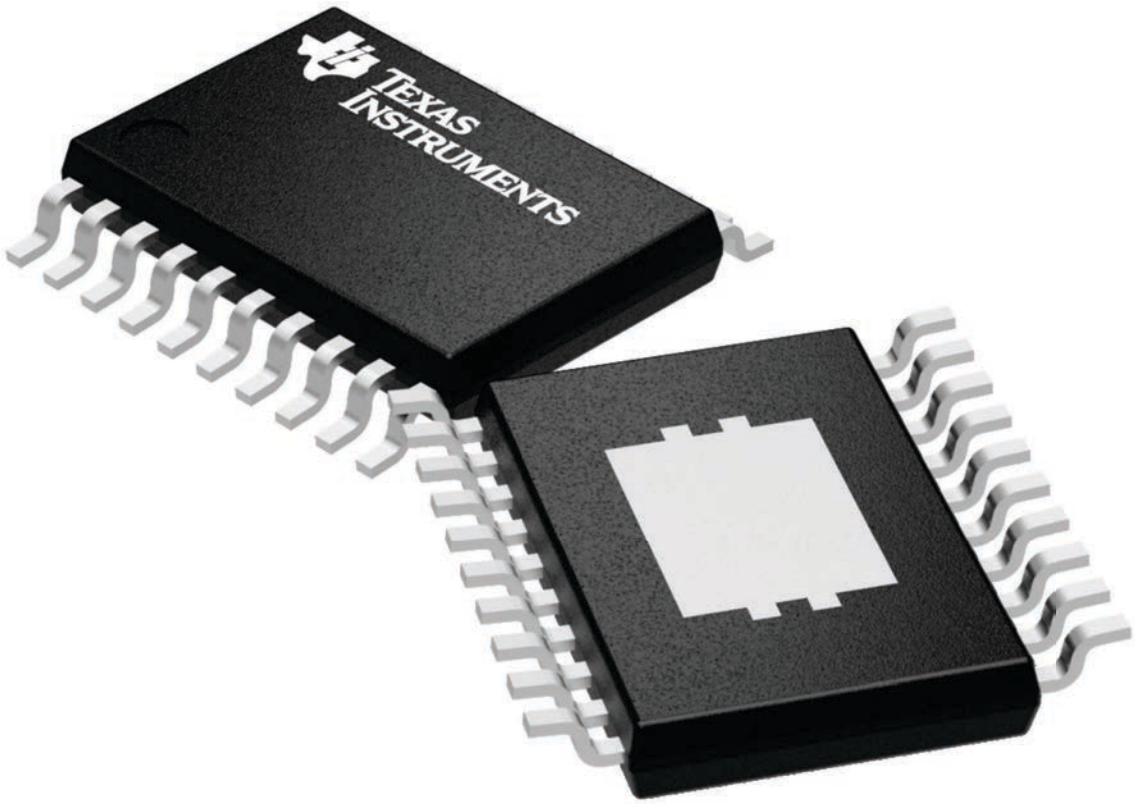

4224669/A

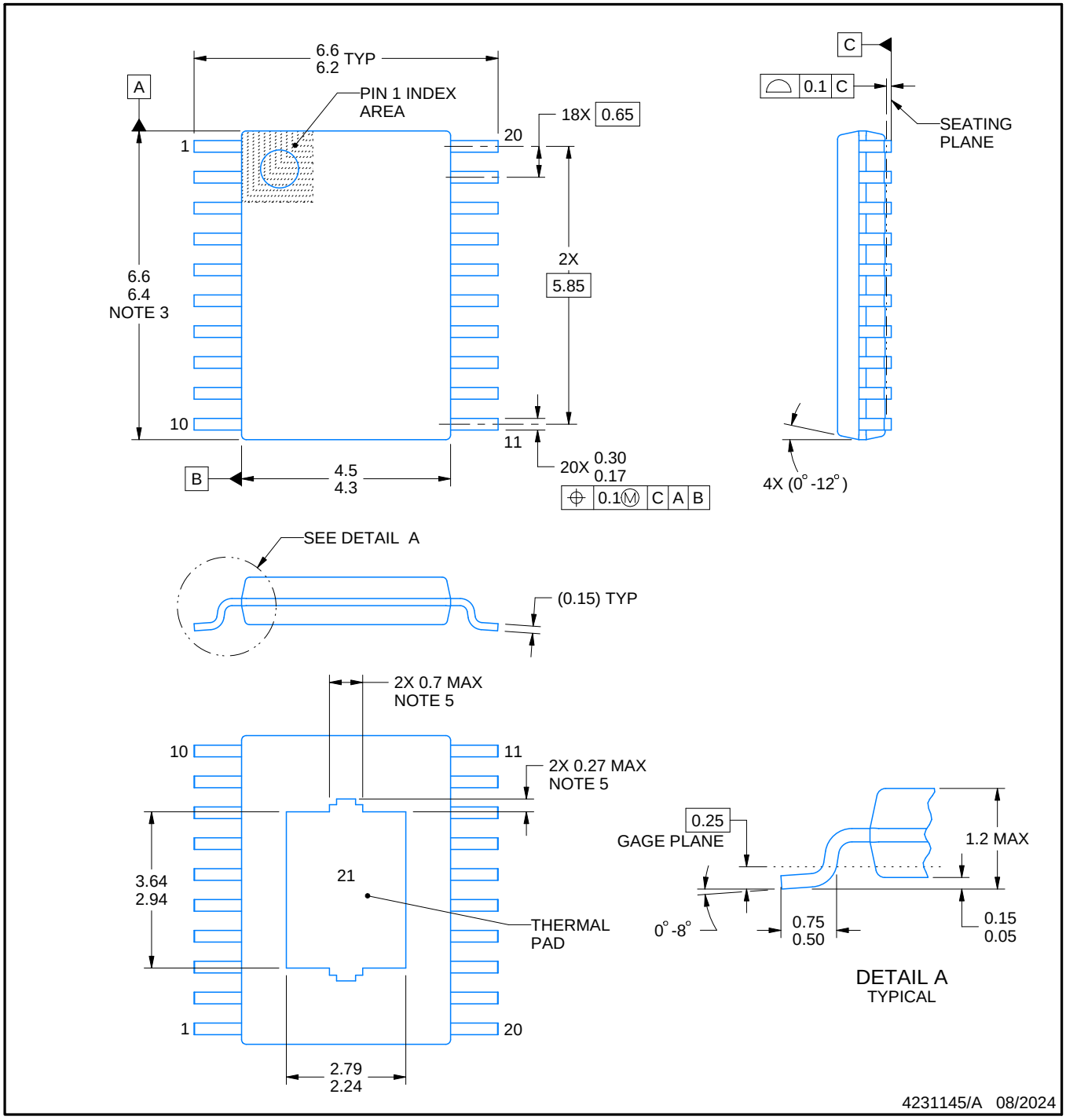

PowerPAD is a trademark of Texas Instruments.

NOTES:

1. All linear dimensions are in millimeters. Any dimensions in parenthesis are for reference only. Dimensioning and tolerancing per ASME Y14.5M.
2. This drawing is subject to change without notice.
3. This dimension does not include mold flash, protrusions, or gate burrs. Mold flash, protrusions, or gate burrs shall not exceed 0.15 mm per side.
4. Reference JEDEC registration MO-153.
5. Features may differ or may not be present.

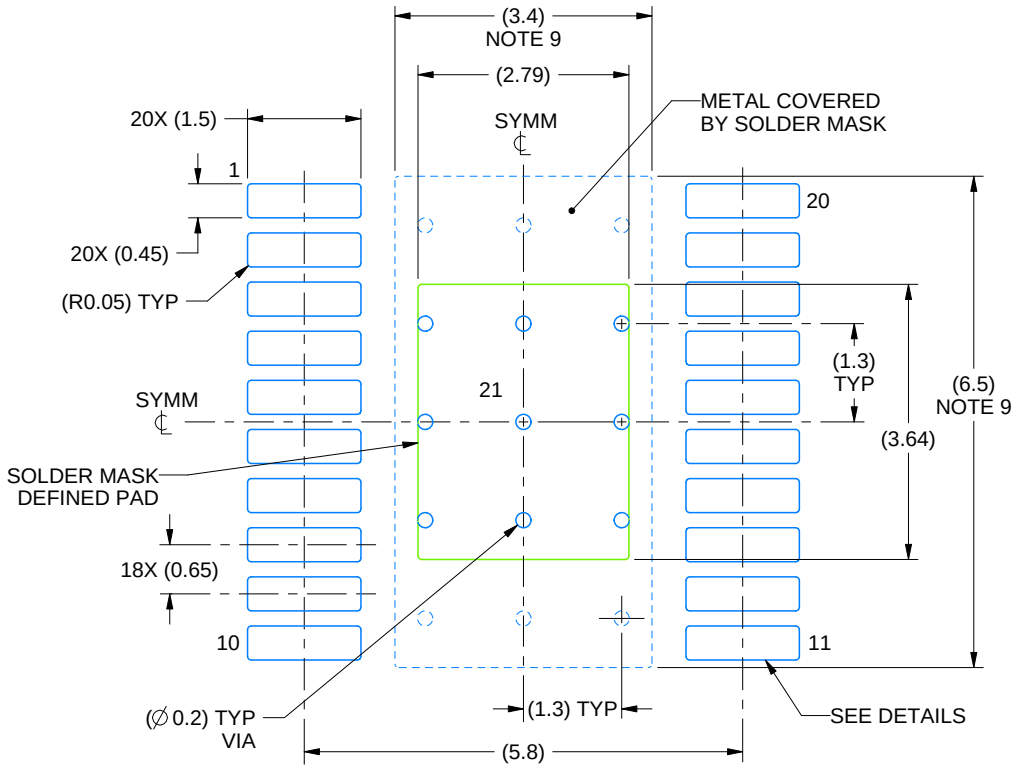

LAND PATTERN EXAMPLE
EXPOSED METAL SHOWN
SCALE: 10X

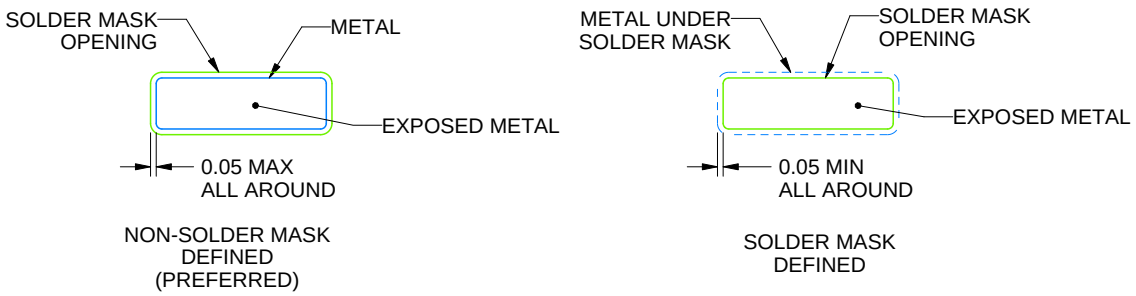

SOLDER MASK DETAILS

4231145/A 08/2024

NOTES: (continued)

6. Publication IPC-7351 may have alternate designs.
7. Solder mask tolerances between and around signal pads can vary based on board fabrication site.
8. This package is designed to be soldered to a thermal pad on the board. For more information, see Texas Instruments literature numbers SLMA002 (www.ti.com/lit/slma002) and SLMA004 (www.ti.com/lit/slma004).
9. Size of metal pad may vary due to creepage requirement.
10. Vias are optional depending on application, refer to device data sheet. It is recommended that vias under paste be filled, plugged or tented.

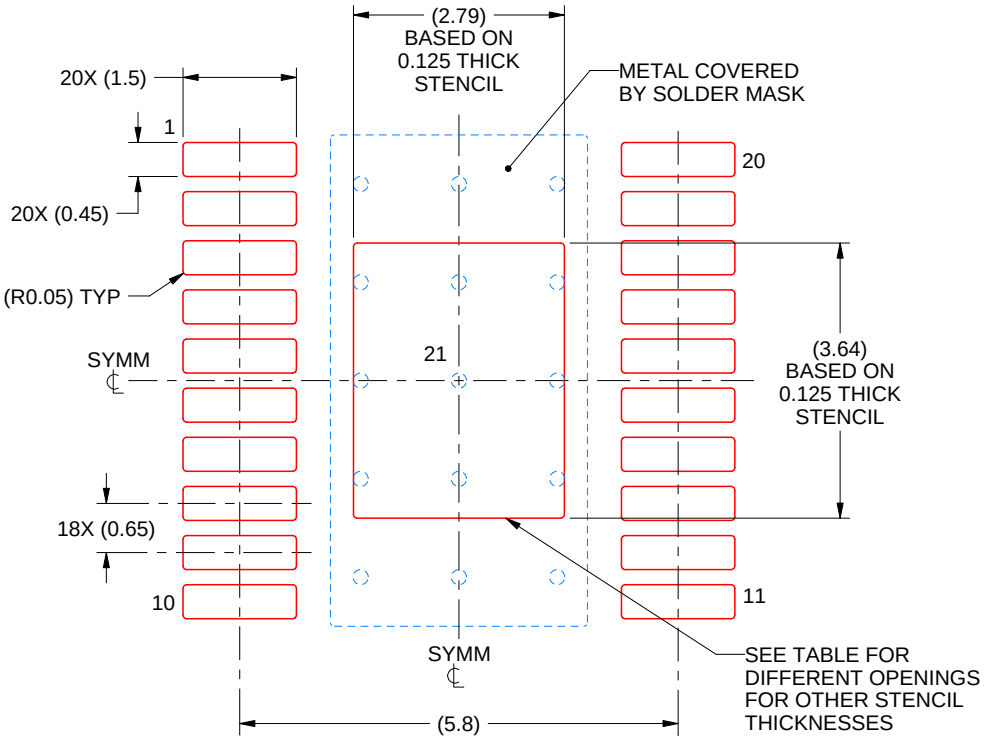

SOLDER PASTE EXAMPLE
BASED ON 0.125 mm THICK STENCIL
SCALE: 10X

STENCIL THICKNESS	SOLDER STENCIL OPENING
0.1	3.12 X 4.07
0.125	2.79 X 3.64 (SHOWN)
0.15	2.55 X 3.32
0.175	2.36 X 3.08

4231145/A 08/2024

NOTES: (continued)

11. Laser cutting apertures with trapezoidal walls and rounded corners may offer better paste release. IPC-7525 may have alternate design recommendations.
12. Board assembly site may have different recommendations for stencil design.

PWP (R-PDSO-G20) PowerPAD™ PLASTIC SMALL OUTLINE

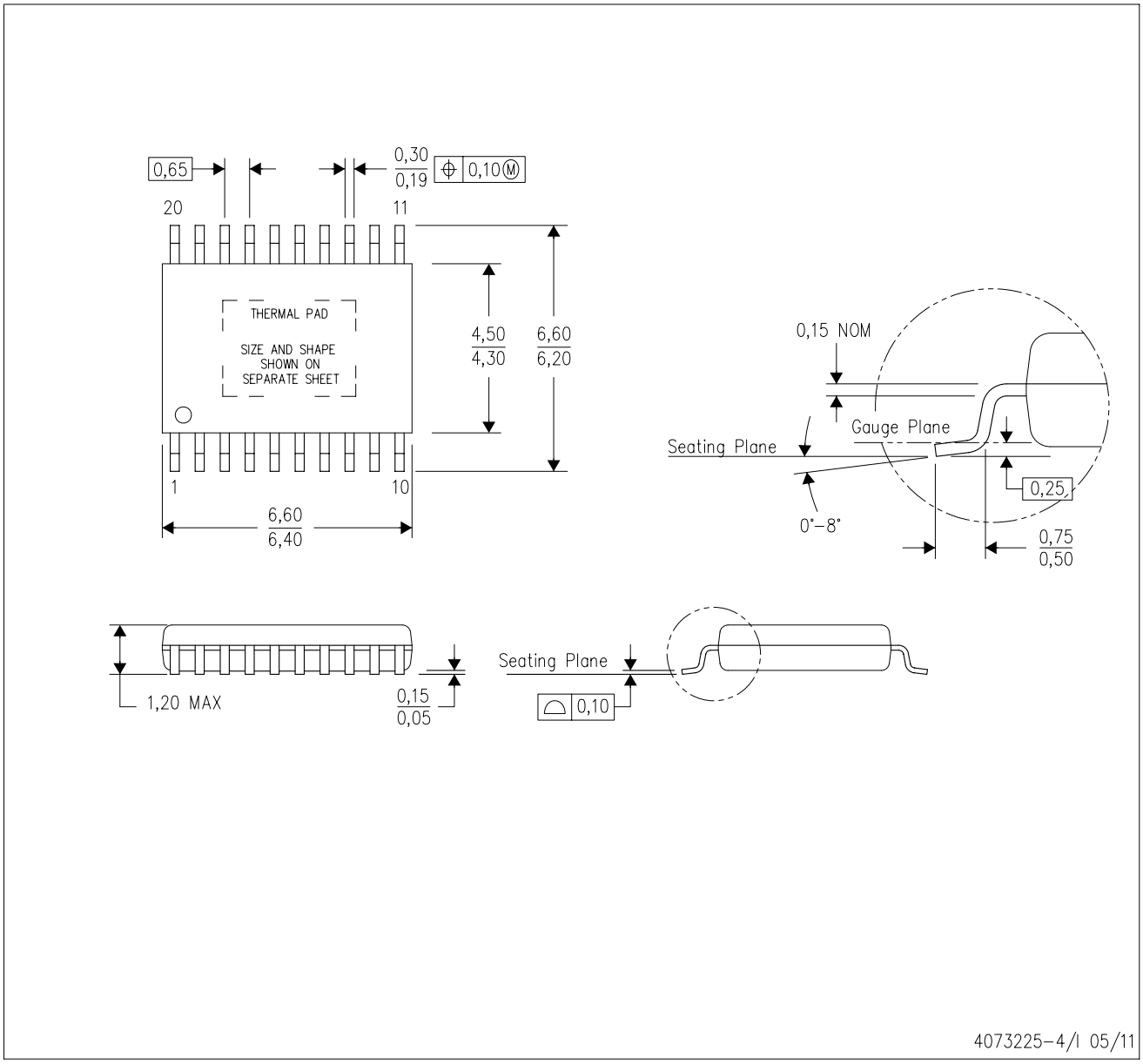

NOTES:
A. All linear dimensions are in millimeters.
B. This drawing is subject to change without notice.
C. Body dimensions do not include mold flash or protrusions. Mold flash and protrusion shall not exceed 0.15 per side.
D. This package is designed to be soldered to a thermal pad on the board. Refer to Technical Brief, PowerPad Thermally Enhanced Package, Texas Instruments Literature No. SLMA002 for information regarding recommended board layout. This document is available at www.ti.com <http://www.ti.com>.
E. See the additional figure in the Product Data Sheet for details regarding the exposed thermal pad features and dimensions.
E. Falls within JEDEC MO-153

PowerPAD is a trademark of Texas Instruments.

PWP (R-PDSO-G20) PowerPAD™ SMALL PLASTIC OUTLINE

THERMAL INFORMATION

This PowerPAD™ package incorporates an exposed thermal pad that is designed to be attached to a printed circuit board (PCB). The thermal pad must be soldered directly to the PCB. After soldering, the PCB can be used as a heatsink. In addition, through the use of thermal vias, the thermal pad can be attached directly to the appropriate copper plane shown in the electrical schematic for the device, or alternatively, can be attached to a special heatsink structure designed into the PCB. This design optimizes the heat transfer from the integrated circuit (IC).

For additional information on the PowerPAD package and how to take advantage of its heat dissipating abilities, refer to Technical Brief, PowerPAD Thermally Enhanced Package, Texas Instruments Literature No. SLMA002 and Application Brief, PowerPAD Made Easy, Texas Instruments Literature No. SLMA004. Both documents are available at www.ti.com.

The exposed thermal pad dimensions for this package are shown in the following illustration.

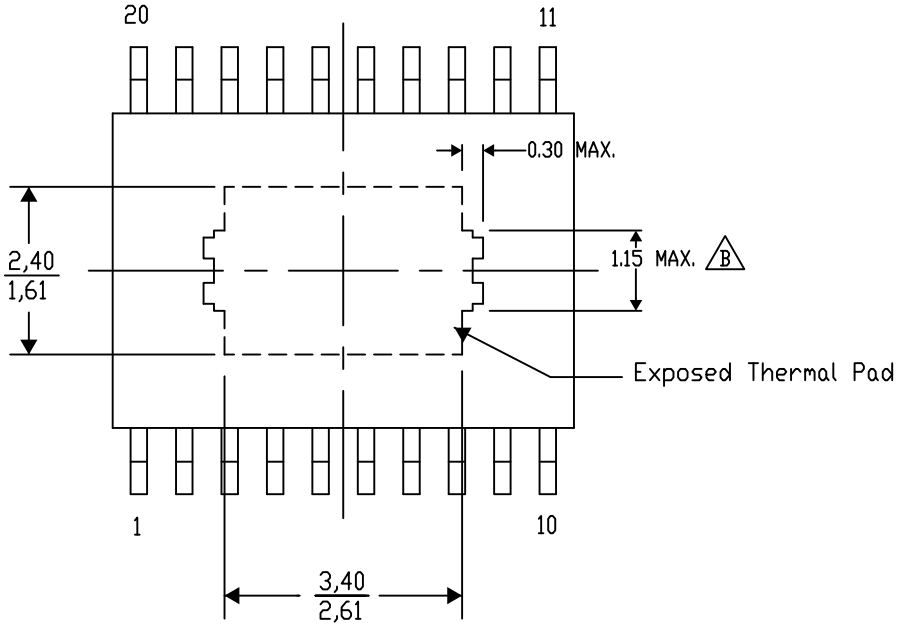

Top View

Exposed Thermal Pad Dimensions

4206332-15/AO 01/16

NOTE: A. All linear dimensions are in millimeters

B. Exposed tie strap features may not be present.

PowerPAD is a trademark of Texas Instruments

PWP (R–PDSO–G20) PowerPAD™ PLASTIC SMALL OUTLINE

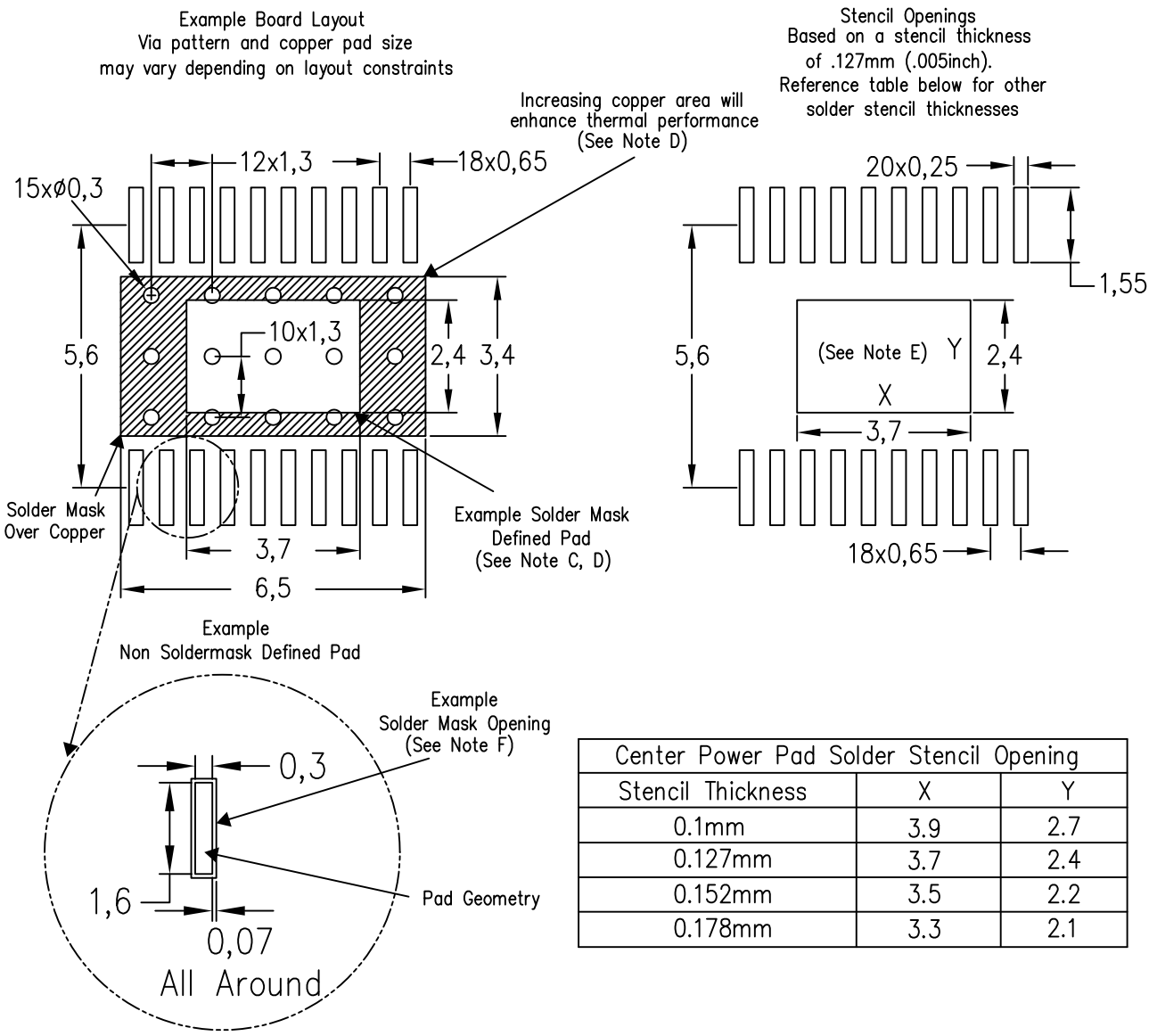

Center Power Pad Solder Stencil Opening		
Stencil Thickness	X	Y
0.1mm	3.9	2.7
0.127mm	3.7	2.4
0.152mm	3.5	2.2
0.178mm	3.3	2.1

4207609–8/W 09/15

NOTES:
A. All linear dimensions are in millimeters.
B. This drawing is subject to change without notice.
C. Customers should place a note on the circuit board fabrication drawing not to alter the center solder mask defined pad.
D. This package is designed to be soldered to a thermal pad on the board. Refer to Technical Brief, PowerPad Thermally Enhanced Package, Texas Instruments Literature No. SLMA002, SLMA004, and also the Product Data Sheets for specific thermal information, via requirements, and recommended board layout. These documents are available at www.ti.com <http://www.ti.com>. Publication IPC–7351 is recommended for alternate designs.
E. Laser cutting apertures with trapezoidal walls and also rounding corners will offer better paste release. Customers should contact their board assembly site for stencil design recommendations. Example stencil design based on a 50% volumetric metal load solder paste. Refer to IPC–7525 for other stencil recommendations.
F. Customers should contact their board fabrication site for solder mask tolerances between and around signal pads.

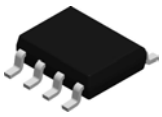

PACKAGE OUTLINE

D0008A

SOIC - 1.75 mm max height

SMALL OUTLINE INTEGRATED CIRCUIT

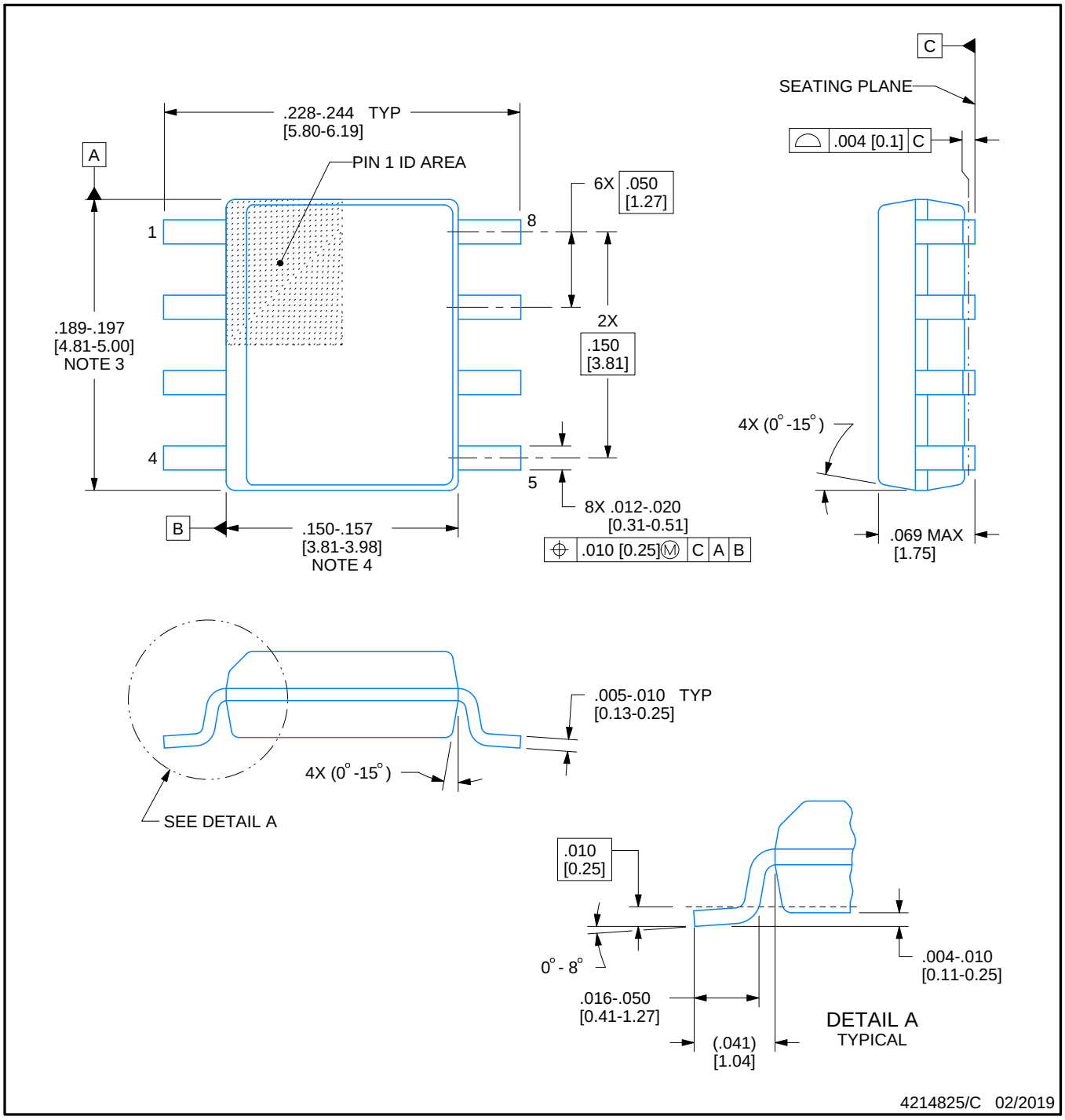

NOTES:

1. Linear dimensions are in inches [millimeters]. Dimensions in parenthesis are for reference only. Controlling dimensions are in inches. Dimensioning and tolerancing per ASME Y14.5M.
2. This drawing is subject to change without notice.
3. This dimension does not include mold flash, protrusions, or gate burrs. Mold flash, protrusions, or gate burrs shall not exceed .006 [0.15] per side.
4. This dimension does not include interlead flash.
5. Reference JEDEC registration MS-012, variation AA.

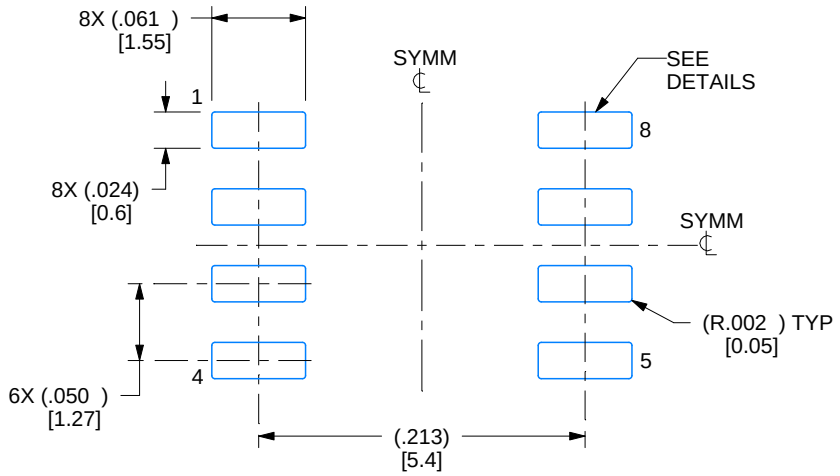

LAND PATTERN EXAMPLE
EXPOSED METAL SHOWN
SCALE:8X

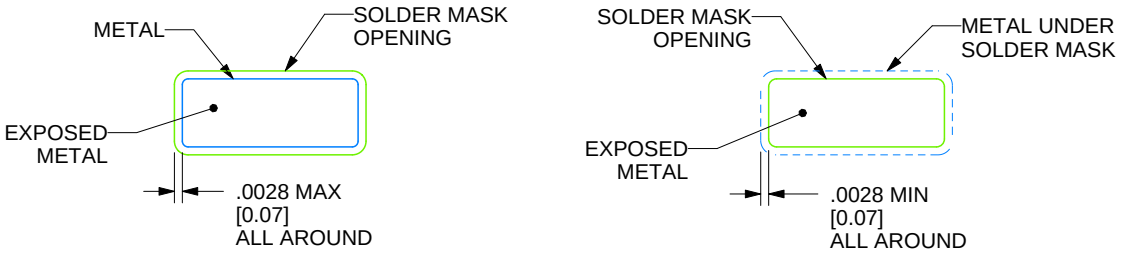

SOLDER MASK DETAILS

4214825/C 02/2019

NOTES: (continued)

6. Publication IPC-7351 may have alternate designs.
7. Solder mask tolerances between and around signal pads can vary based on board fabrication site.

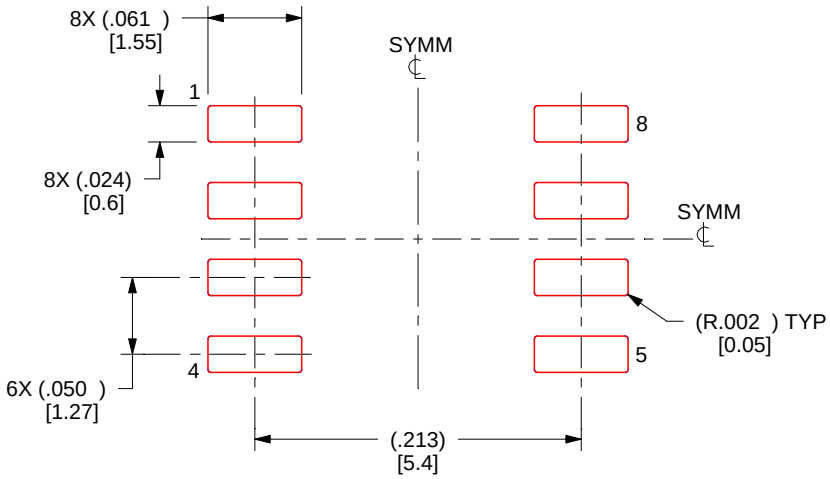

SOLDER PASTE EXAMPLE
BASED ON .005 INCH [0.125 MM] THICK STENCIL
SCALE:8X

4214825/C 02/2019

NOTES: (continued)

8. Laser cutting apertures with trapezoidal walls and rounded corners may offer better paste release. IPC-7525 may have alternate design recommendations.
9. Board assembly site may have different recommendations for stencil design.

P (R–PDIP–T8) PLASTIC DUAL–IN–LINE PACKAGE

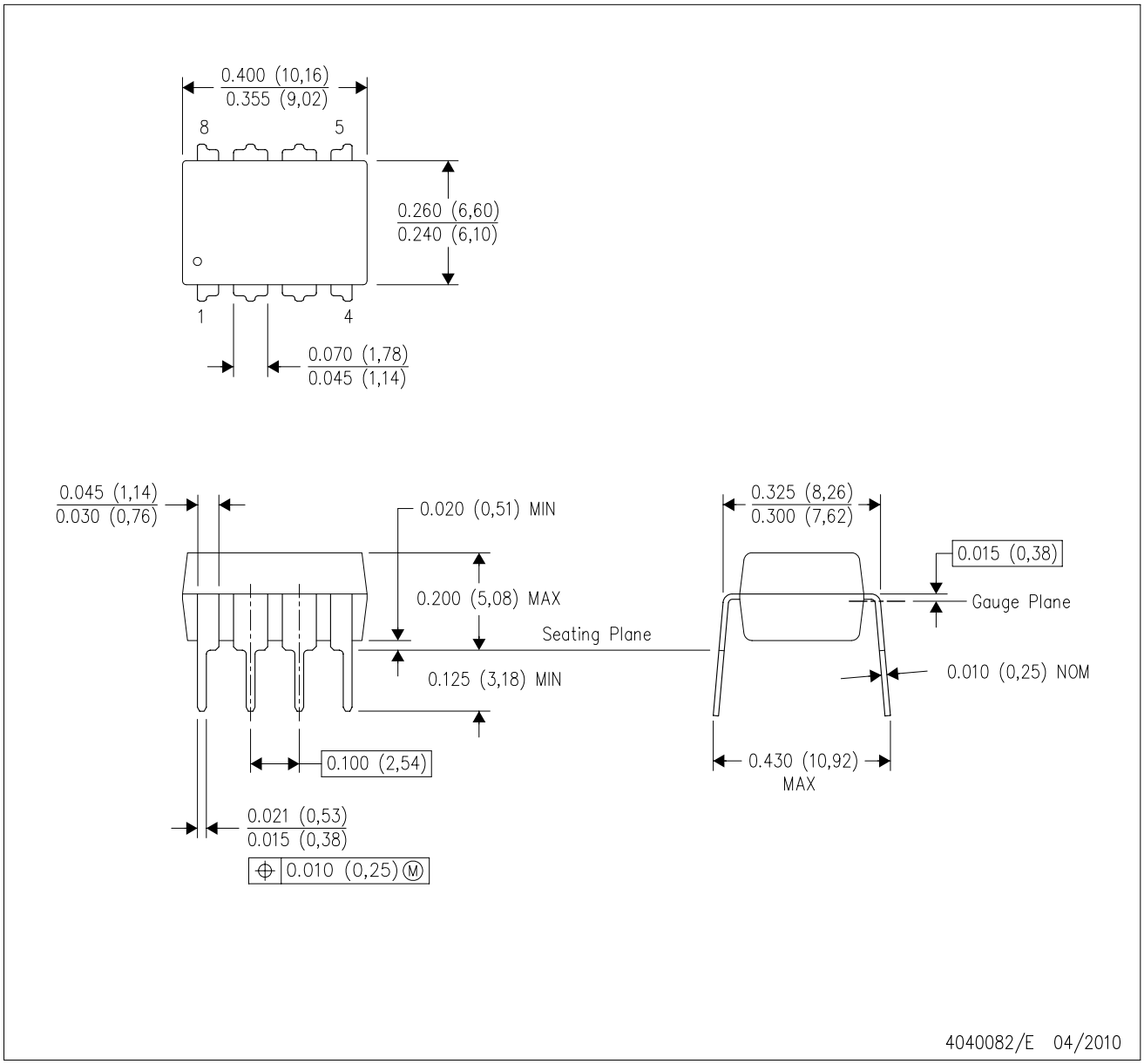

NOTES:
A. All linear dimensions are in inches (millimeters).
B. This drawing is subject to change without notice.
C. Falls within JEDEC MS–001 variation BA.

N (R–PDIP–T**) PLASTIC DUAL–IN–LINE PACKAGE

16 PINS SHOWN

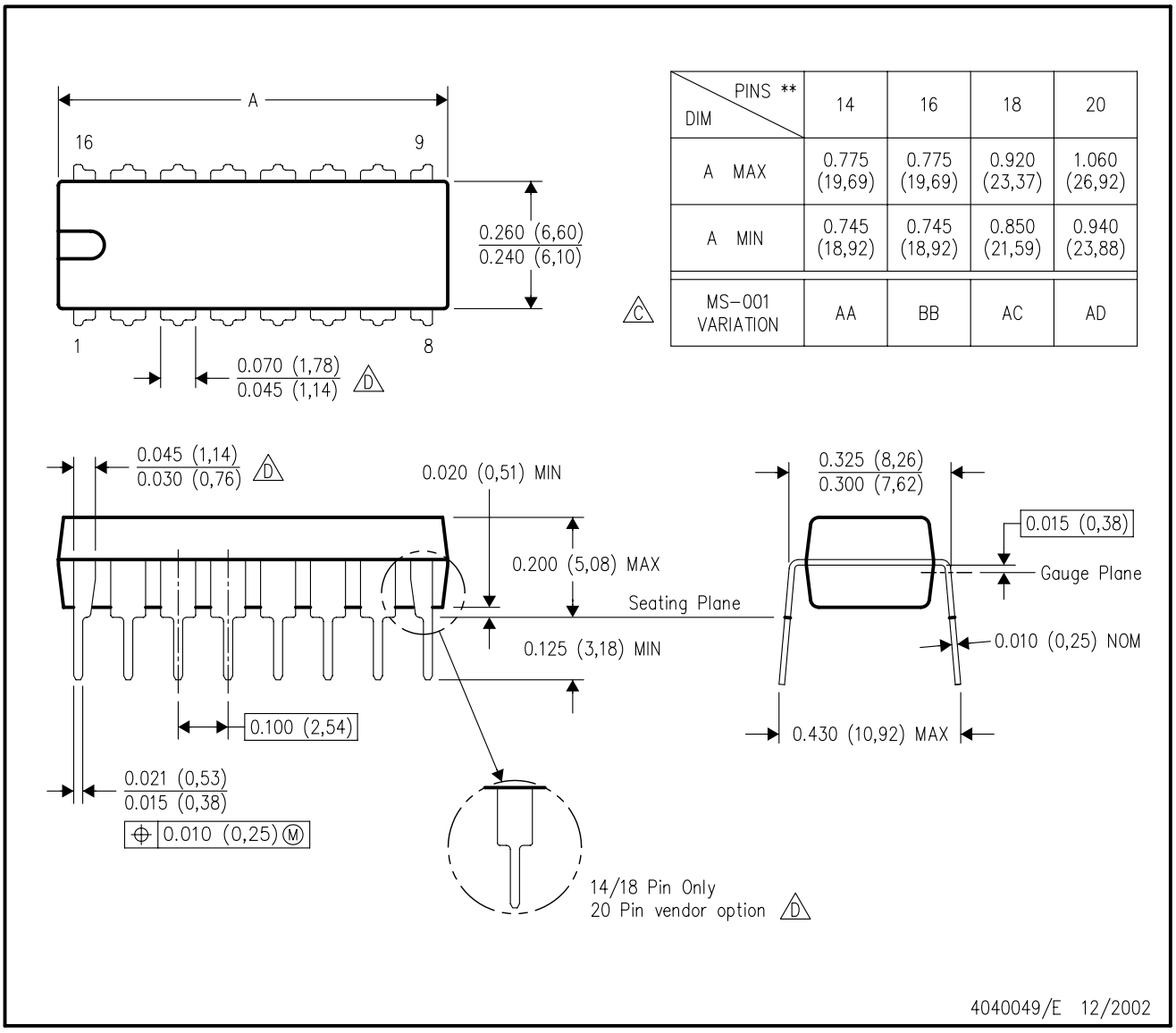

DIM \ PINS **	14	16	18	20
A MAX	0.775 (19,69)	0.775 (19,69)	0.920 (23,37)	1.060 (26,92)
A MIN	0.745 (18,92)	0.745 (18,92)	0.850 (21,59)	0.940 (23,88)
MS–001 VARIATION (C)	AA	BB	AC	AD

NOTES:
A. All linear dimensions are in inches (millimeters).
B. This drawing is subject to change without notice.
C. Falls within JEDEC MS–001, except 18 and 20 pin minimum body length (Dim A).
D. The 20 pin end lead shoulder width is a vendor option, either half or full width.

IMPORTANT NOTICE AND DISCLAIMER

TI PROVIDES TECHNICAL AND RELIABILITY DATA (INCLUDING DATASHEETS), DESIGN RESOURCES (INCLUDING REFERENCE DESIGNS), APPLICATION OR OTHER DESIGN ADVICE, WEB TOOLS, SAFETY INFORMATION, AND OTHER RESOURCES “AS IS” AND WITH ALL FAULTS, AND DISCLAIMS ALL WARRANTIES, EXPRESS AND IMPLIED, INCLUDING WITHOUT LIMITATION ANY IMPLIED WARRANTIES OF MERCHANTABILITY, FITNESS FOR A PARTICULAR PURPOSE OR NON-INFRINGEMENT OF THIRD PARTY INTELLECTUAL PROPERTY RIGHTS.

These resources are intended for skilled developers designing with TI products. You are solely responsible for (1) selecting the appropriate TI products for your application, (2) designing, validating and testing your application, and (3) ensuring your application meets applicable standards, and any other safety, security, regulatory or other requirements.

These resources are subject to change without notice. TI grants you permission to use these resources only for development of an application that uses the TI products described in the resource. Other reproduction and display of these resources is prohibited. No license is granted to any other TI intellectual property right or to any third party intellectual property right. TI disclaims responsibility for, and you fully indemnify TI and its representatives against any claims, damages, costs, losses, and liabilities arising out of your use of these resources.

TI’s products are provided subject to TI’s Terms of Sale, TI’s General Quality Guidelines, or other applicable terms available either on ti.com or provided in conjunction with such TI products. TI’s provision of these resources does not expand or otherwise alter TI’s applicable warranties or warranty disclaimers for TI products. Unless TI explicitly designates a product as custom or customer-specified, TI products are standard, catalog, general purpose devices.

TI objects to and rejects any additional or different terms you may propose.

Copyright © 2026, Texas Instruments Incorporated

Last updated 10/2025