TCAN944-Q1 Automotive Fault-Protected CAN FD Transceiver with Standby Mode

1 Features

- AEC-Q100 Qualified for automotive applications
  - Human body model (HBM) ESD protection: ±12KV for CANH and CANL pins as per AEC Q100-002
  - Charged-device model (CDM) ESD protection: ±500V as per AEC Q100-011
  - IEC 61000-4-2 Contact discharge: ±8KV (unpowered)
- Compatible with ISO 11898-2:2024 physical layer standard
- Functional Safety-Capable
  - Documentation available to aid in functional safety system design
- Support of classical CAN and optimized CAN FD performance at 2Mbps and 5Mbps
  - Short and symmetrical propagation delays for enhanced timing margin
- TCAN944V-Q1 I/O voltage range supports 2.9V to 5.25V
- Support for 12V battery applications
- Receiver common mode input voltage: ±12V
- Protection features:
  - Bus fault protection: ±40V
  - Undervoltage protection
  - TXD-dominant time-out (DTO)
  - Thermal-shutdown protection (TSD)
- Operating modes:
  - Normal mode
  - Low power standby mode supporting remote wake-up request
- Optimized behavior when unpowered
  - Bus and logic pins are high impedance (no load to operating bus or application)
  - Hot-plug capable: power up/down glitch-free operation on bus and RXD output
- 8-Pin SOIC, small footprint SOT-23 and leadless VSON-8 package with improved automated optical inspection (AOI) capability

2 Applications

- Automotive and transportation
  - Body control modules
  - Automotive gateway
  - Advanced driver assistance system (ADAS)
  - Infotainment

3 Description

The TCAN944-Q1 is a high speed controller area network (CAN) transceiver that is compatible with physical layer requirements of the ISO 11898-2:2024 high-speed CAN specification.

The device includes internal logic level translation via the V_{IO} pin to allow for interfacing the transceiver I/O directly to 3.3V, or 5V logic levels. The transceiver supports a low-power standby mode and wake over CAN which is compatible to the ISO 11898-2:2024 defined wake-up pattern (WUP).

The transceivers also include thermal-shutdown (TSD), TXD-dominant time-out (DTO), supply undervoltage detection, and ±40V bus fault protection. The devices have defined fail-safe behavior in supply undervoltage or floating pin scenarios. These transceivers are not only available in industry-standard SOIC-8 and VSON-8 packages, but also have a space-saving small footprint SOT-23 package option.

Package Information

PART NUMBER	PACKAGE(1)	PACKAGE SIZE(2)
TCAN944-Q1	SOIC (D)	4.9mm × 6mm
	VSON (DRB)	3mm × 3mm
	SOT-23 (DDF)	2.9mm × 2.8mm

(1) For more information, see Section 12.
(2) The package size (length × width) is a nominal value and includes pins, where applicable.

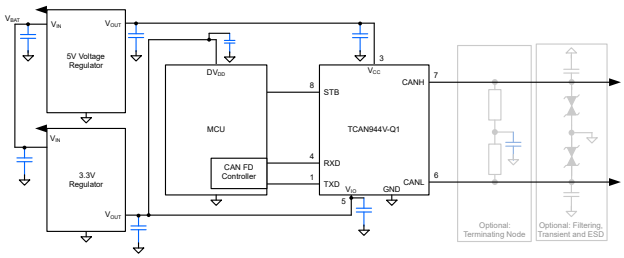

Simplified Schematic

ADVANCE INFORMATION

An IMPORTANT NOTICE at the end of this data sheet addresses availability, warranty, changes, use in safety-critical applications, intellectual property matters and other important disclaimers. ADVANCE INFORMATION for preproduction products; subject to change without notice.

ADVANCE INFORMATION

Table of Contents

1 Features....1
2 Applications....1
3 Description....1
4 Device Comparison....2
5 Pin Configuration and Functions....3
6 Specifications....4
6.1 Absolute Maximum Ratings....4
6.2 ESD Ratings....4
6.3 ESD Ratings, IEC Specification....4
6.4 Recommended Operating Conditions....5
6.5 Thermal Information....5
6.6 Power Supply Characteristics....5
6.7 Dissipation Ratings....6
6.8 Electrical Characteristics....6
6.9 Switching Characteristics....8
6.10 Typical Characteristics....9
7 Parameter Measurement Information....10
8 Detailed Description....13
8.1 Overview....13
8.2 Functional Block Diagram....14
8.3 Feature Description....14
8.4 Device Functional Modes....18
9 Application Information Disclaimer....21
9.1 Application Information....21
9.2 Typical Application....21
9.3 System Examples....23
9.4 Power Supply Recommendations....24
9.5 Layout....24
10 Device and Documentation Support....26
10.1 Receiving Notification of Documentation Updates....26
10.2 Support Resources....26
10.3 Trademarks....26
10.4 Electrostatic Discharge Caution....26
10.5 Glossary....26
11 Revision History....26
12 Mechanical, Packaging, and Orderable Information....26

4 Device Comparison

Device Comparison Table

Part Number	Low Voltage I/O Logic Support on Pin 5	Pin 8 Mode Selection
TCAN944-Q1	No	Low Power Standby Mode with Remote Wake
TCAN944V-Q1	Yes	

Copyright © 2026 Texas Instruments Incorporated

5 Pin Configuration and Functions

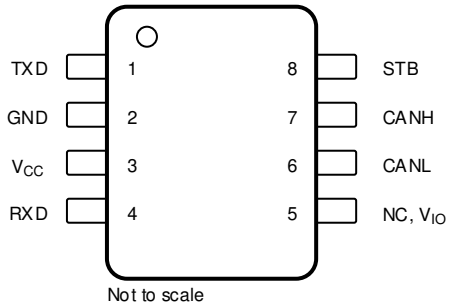

Figure 5-1. DDF Package, 8-Pin SOT (Top View)

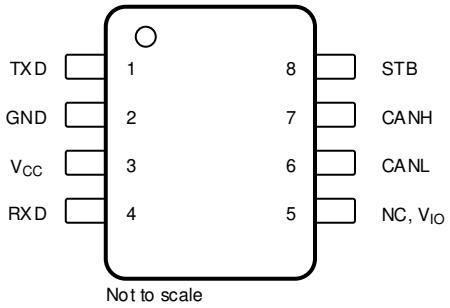

Figure 5-2. D Package, 8-Pin SOIC (Top View)

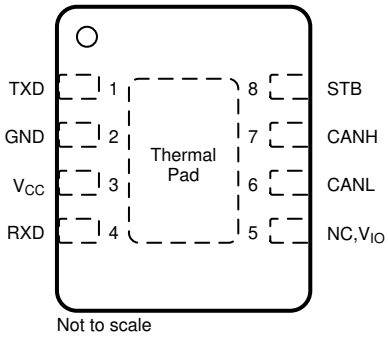

Figure 5-3. DRB Package, 8-Pin VSON (Top View)

Table 5-1. Pin Functions

Pins		Type[(1)]	Description
Name	No.		
TXD	1	Digital Input	CAN transmit data input; integrated pull-up
GND	2	GND	Ground connection
V_{CC}	3	Supply	5V supply voltage
RXD	4	Digital Output	CAN receive data output, tri-stated when device powered off
NC	5	—	Not internally connected; Devices without V_{IO}
V_{IO}		Supply	I/O supply voltage for devices with suffix 'V'
CANL	6	Bus IO	Low-level CAN bus input/output line
CANH	7	Bus IO	High-level CAN bus input/output line
STB	8	Digital Input	Standby input for mode control; integrated pull-up
Thermal Pad (VSON only)		—	Connect the thermal pad to any internal PCB ground plane using multiple vias for improved thermal performance.

(1) I = input, O = output, I/O = input and output, P = power

ADVANCE INFORMATION

ADVANCE INFORMATION

6 Specifications

6.1 Absolute Maximum Ratings

over operating free-air temperature range (unless otherwise noted)[(1)(2)]

		MIN	MAX	UNIT
V_{CC}	Supply voltage	–0.3	6	V
V_{IO}	Supply voltage I/O level shifter	–0.3	6	V
V_{BUS}	CAN Bus I/O voltage (CANH, CANL)	–40	40	V
V_{DIFF}	Max differential voltage range between CANH and CANL	-40	40	V
V_{Logic_Input}	Logic input terminal voltage	–0.3	6	V
V_{RXD}	RXD output terminal voltage range	–0.3	6	V
$I_{O(RXD)}$	RXD output current	–8	8	mA
T_J	Operating virtual junction temperature range	–40	165	°C
T_{STG}	Storage temperature	–65	150	°C

(1) *Operation outside the Absolute Maximum Ratings may cause permanent device damage. Absolute Maximum Ratings do not imply functional operation of the device at these or any other conditions beyond those listed under Recommended Operating Conditions. If used outside the Recommended Operating Conditions but within the Absolute Maximum Ratings, the device may not be fully functional, and this may affect device reliability, functionality, performance, and shorten the device lifetime.*
(2) All voltage values, except differential I/O bus voltages, are with respect to ground terminal.

6.2 ESD Ratings

				VALUE	UNIT
V_{ESD}	Electrostatic discharge	Human-body model (HBM), per AEC Q100-002[(1)]	HBM classification level 3A for all pins	±2000	V
			HBM classification level 3B for global pins CANH & CANL	±12000	V
		Charged-device model (CDM), per AEC Q100-011 CDM classification level C5 for all pins		±500	V

(1) AEC Q100-002 indicates that HBM stressing shall be in accordance with the ANSI/ESDA/JEDEC JS-001 specification.

6.3 ESD Ratings, IEC Specification

				VALUE	UNIT
V_{ESD}	System Level Electro-Static Discharge (ESD)	CAN bus terminals (CANH CANL) to GND	IEC 61000-4-2: Powered Contact Discharge	±8000	V
V_{TRAN}	ISO7637 ISO Pulse Transients[(1)]	CAN bus terminals (CANH, CANL)	Pulse 1	–100	V
			Pulse 2a	75	V
			Pulse 3a	–150	V
			Pulse 3b	100	V
	ISO7637 Slow transients pulse[(2)]	CAN bus terminals (CANH CANL) to GND	Direct coupling capacitor "slow transient pulse" with 100nF coupling capacitor - powered	±30	V

(1) Tested according to IEC 62228-3 CAN Transceivers (2018), Section 6.3; standard pulses parameters defined in ISO 7637-2 (2011).
(2) Tested according to ISO 7637-3 (2017); Electrical transient transmission by capacitive and inductive coupling via lines other than supply lines.

Copyright © 2026 Texas Instruments Incorporated

6.4 Recommended Operating Conditions

		MIN	NOM	MAX	UNIT
V_{CC}	Supply voltage	4.75	5	5.25	V
V_{IO}	Supply voltage for I/O level shifter	2.9		5.25	V
$I_{OH(RXD)}$	RXD terminal high level output current	–2			mA
$I_{OL(RXD)}$	RXD terminal low level output current			2	mA
T_J	Operational free-air temperature (see thermal characteristics table)	–40		150	°C
T_{SDR}	Thermal shutdown	160			°C
T_{SDF}	Thermal shutdown release			150	°C
$T_{SD(HYS)}$	Thermal shutdown hysteresis		10		°C

6.5 Thermal Information

THERMAL METRIC[1]		TCAN944(V)-Q1		UNIT
		D (SOIC)	DRB (VSON)	
$R_{\theta JA}$	Junction-to-ambient thermal resistance	123.1	76.9	°C/W
$R_{\theta JC(top)}$	Junction-to-case (top) thermal resistance	65.2	74.8	°C/W
$R_{\theta JB}$	Junction-to-board thermal resistance	72.5	45.1	°C/W
Ψ_{JT}	Junction-to-top characterization parameter	17.3	7.0	°C/W
Ψ_{JB}	Junction-to-board characterization parameter	72.1	41.2	°C/W
$R_{\theta JC(bot)}$	Junction-to-case (bottom) thermal resistance	–	21.2	°C/W

(1) For more information about traditional and new thermal metrics, see the Semiconductor and IC Package Thermal Metrics application note.

6.6 Power Supply Characteristics

Over recommended operating conditions with T_J = -40°C to 150°C (unless otherwise noted)

PARAMETER		TEST CONDITIONS		MIN	TYP	MAX	UNIT
I_{CC}	Supply current normal mode	Dominant	TXD = 0V, R_L = 60Ω, C_L = open		44	70	mA
	Supply current normal mode	Dominant	TXD = 0V, R_L = 50Ω, C_L = open		48	80	mA
	Supply current normal mode	Dominant with bus fault	TXD = 0V, CANH = CANL = ±25V, R_L = open, C_L = open			130	mA
	Supply current normal mode	Recessive	TXD = V_{CC}, R_L = 50Ω, C_L = open, RCM = open		5.6	10	mA
	Supply current standby mode	TCAN944V	TXD = V_{IO}, R_L = 50Ω, C_L = open			5	µA
	Supply current standby mode	TCAN944	TXD = V_{CC}, R_L = 50Ω, C_L = open			30	µA
I_{IO}	I/O supply current normal mode	Dominant	RXD floating, TXD = 0V		135	400	µA
	I/O supply current normal mode	Recessive	RXD floating, TXD = V_{IO}		28	150	µA
	I/O supply current standby mode		RXD floating, TXD = V_{IO}		20	28	µA
UV_{VCC}	Rising under voltage detection on V_{CC} for protected mode				4.2	4.6	V
UV_{VCC}	Falling under voltage detection on V_{CC} for protected mode			3.5	4	4.5	V
UV_{VIO}	Rising under voltage detection on V_{IO}				2.5	2.9	V
UV_{VIO}	Falling under voltage detection on V_{IO}			2.1	2.4		V

ADVANCE INFORMATION

Over recommended operating conditions with T_J = -40°C to 150°C (unless otherwise noted)

PARAMETER		TEST CONDITIONS	MIN	TYP	MAX	UNIT
TSD	Thermal shutdown temperature		165	180	195	
TSD_HYS	Thermal shutdown hysteresis			10		

6.7 Dissipation Ratings

PARAMETER		TEST CONDITIONS	MIN	TYP	MAX	UNIT
P_D	Average power dissipation Normal mode	V_{CC} = 5V, V_{IO} = 3.3V, T_J = 27°C, R_L = 60Ω, C_{L_RXD} = 15pF TXD input = 250kHz 50% duty cycle square wave		90		mW
		V_{CC} = 5.25V, V_{IO} = 3.3V, T_J = 150°C, R_L = 60Ω, C_{L_RXD} = 15pF TXD input = 2.5MHz 50% duty cycle square wave		110		mW

6.8 Electrical Characteristics

Over recommended operating conditions with TJ = -40°C to 150°C (unless otherwise noted)[(1)(2)]

PARAMETER		TEST CONDITIONS	MIN	TYP	MAX	UNIT
Driver Electrical Characteristics						
$V_{CANH(D)}$	Bus output voltage (dominant) CANH	V_{TXD} = 0V, R_L =50Ω to 65Ω, C_L = open, R_{CM} = open	2.75		4.5	V
$V_{CANL(D)}$	Bus output voltage (dominant) CANL	V_{TXD} = 0V, R_L =50Ω to 65Ω, C_L = open, R_{CM} = open	0.5		2.25	V
$V_{CANH(R)}$ $V_{CANL(R)}$	Bus output voltage (recessive)	V_{TXD} = V_{CC}, R_L = open (no load), R_{CM} = open	2		3	V
V_{SYM}	Driver symmetry ($V_{O(CANH)}$ + $V_{O(CANL)}$)/V_{CC}	STB = 0V, RL = 60Ω, CSPLIT = 4.7nF, CL = open, RCM = open,TXD = 250KHz, 1MHz, 2.5MHz	0.9		1.1	V/V
V_{SYM_DC}	DC output symmetry (V_{CC} - $V_{O(CANH)}$ - $V_{O(CANL)}$)	R_L = 60Ω, C_L = open	–400		400	mV
$V_{DIFF(D)}$	Differential output voltage normal mode Dominant	TXD = 0V, 50Ω ≤ R_L ≤ 65Ω, C_L = open	1.5		3	V
		TXD = 0V, 45Ω ≤ R_L ≤ 70Ω, C_L = open	1.4		3.3	V
		TXD = 0V, R_L = 2240Ω, C_L = open	1.5		5	V
$V_{DIFF(R)}$	Differential output voltage normal mode Recessive	TXD = V_{CC} or VIO, R_L = 60Ω, C_L = open	–120		12	mV
		Normal mode, TXD = V_{CC} or VIO, R_L = open, C_L = open	–50		50	mV
$V_{CANH(INACT)}$	Bus output voltage on CANH with bus biasing inactive	V_{TXD} = V_{CC} or VIO, R_L = open, C_L = open, R_{CM} = open	–0.1		0.1	V
$V_{CANL(INACT)}$	Bus output voltage on CANL with bus biasing inactive	V_{TXD} = V_{CC} or VIO, R_L = open, C_L = open, R_{CM} = open	–0.1		0.1	V
$V_{DIFF(INACT)}$	Bus output voltage on CANH - CANL (recessive) with bus biasing inactive	V_{TXD} = V_{CC} or VIO, R_L = open, C_L = open, R_{CM} = open	–0.2		0.2	V
$I_{CANH(OS)}$	Short-circuit steady-state output current, Dominant	–3.0V ≤ V_{CANH} ≤ +18.0V, CANL = open, V_{TXD} = 0V	–115			mA
$I_{CANL(OS)}$		–3.0V ≤ V_{CANL} ≤ +18.0V, CANH = open, V_{TXD} = 0V			115	mA
I_{OS_REC}	Short-circuit steady-state output current; Recessive	–40V ≤ V_{BUS} ≤ +40V, V_{BUS} = CANH = CANL	–5		5	mA
Receiver Electrical Characteristics						
$V_{DIFF_RX(D)}$	Receiver dominant state differential input voltage range, bus biasing active	–12V ≤ V_{CANL} ≤ +12V –12V ≤ V_{CANH} ≤ +12V	0.9		8	V
$V_{DIFF_RX(R)}$	Receiver recessive state differential input voltage range, bus biasing active	–12V ≤ V_{CANL} ≤ +12V –12V ≤ V_{CANH} ≤ +12V	-3		0.5	V

ADVANCE INFORMATION

Copyright © 2026 Texas Instruments Incorporated

Over recommended operating conditions with TJ = -40°C to 150°C (unless otherwise noted)[(1)(2)]

PARAMETER		TEST CONDITIONS	MIN	TYP	MAX	UNIT
V_{HYS}	Hysteresis voltage for input-threshold, normal and selective wake modes	-12V ≤ V_{CM} ≤ 12V		80		mV
$V_{DIFF_RX(D_INACT)}$	Receiver dominant state differential input voltage range, bus biasing in-active	–12V ≤ V_{CANL} ≤ +12V –12V ≤ V_{CANH} ≤ +12V	1.15		8	V
$V_{DIFF_RX(R_INACT)}$	Receiver recessive state differential input voltage range, bus biasing in-active	–12V ≤ V_{CANL} ≤ +12V –12V ≤ V_{CANH} ≤ +12V	–3		0.4	V
V_{CM}	Common mode range:		–12		12	V
$I_{LKG(IOFF)}$	Power-off (unpowered) bus input leakage current	CANH = CANL = 5V, VCC = VIO = GND			5	µA
CI powered Normal	Input capacitance to ground (CANH or CANL)	TXD = V_{CC}, V_{IO} = V_{CC}			20	pF
C_{ID} powered Normal	Differential input capacitance	TXD = V_{CC}, V_{IO} = V_{CC}			10	pF
R_{DIFF}	Differential input resistance durring passive recessive state	V_{TXD} = V_{CC} or VIO, normal mode: –2.0V ≤ V_{CANH} ≤ +7.0V; –2.0V ≤ V_{CANL} ≤ +7.0V	18		90	kΩ
R_{SE_CANH} R_{SE_CANL}	Single ended Input resistance during passive recessive state	–2V ≤ V_{CANH} ≤ +7V –2V ≤ V_{CANL} ≤ +7V	9		45	kΩ
m_R	Input resistance matching: [1 – ($R_{IN(CANH)}$) / $R_{IN(CANL)}$))] × 100%	V_{CANH} = V_{CANL} = 5V	–2%		2%	
TXD Terminal (CAN Transmit Data Input)						
V_{IH}	High-level input voltage	TCAN944	0.7 × V_{CC}			V
V_{IH}	High-level input voltage	TCAN944V	0.7 × V_{IO}			V
V_{IL}	Low-level input voltage	TCAN944			0.3 × V_{CC}	V
V_{IL}	Low-level input voltage	TCAN944V			0.3 × V_{IO}	V
I_{IH}	High-level input leakage current	TXD = V_{CC} = V_{IO} = 5.25V	–2.5	0	1	µA
I_{IL}	Low-level input leakage current	TXD = 0V, V_{CC} = V_{IO} = 5.25V	–200		–20	µA
$I_{LKG(OFF)}$	Unpowered leakage current	TXD = 5.25V, V_{CC} = V_{IO} = 0V	–1	0	1	µA
C_I	Input Capacitance	V_{IN} = 0.4×sin(2×π×2×10^6×t)+2.5V		2		pF
RXD Terminal (CAN Receive Data Output)						
V_{OH}	High-level input voltage	I_O = –2mA, TCAN944	0.8 × V_{CC}			V
V_{OH}	High-level input voltage	I_O = –2mA, TCAN944V	0.8 × V_{IO}			V
V_{OL}	Low-level input voltage	I_O = 2mA, TCAN944			0.2 × V_{CC}	V
V_{OL}	Low-level input voltage	I_O = 2mA, TCAN944V			0.2 × V_{IO}	V
$I_{LKG(OFF)}$	Unpowered leakage current	RXD = 5.25V, V_{CC} = V_{IO} = 0V	–1	0	1	µA
STB Terminal						
V_{IH}	High-level input voltage	TCAN944	0.7 × V_{CC}			V
V_{IH}	High-level input voltage	TCAN944V	0.7 × V_{IO}			V
V_{IL}	Low-level input voltage	TCAN944			0.3 × V_{CC}	V
V_{IL}	Low-level input voltage	TCAN944V			0.3 × V_{IO}	V
I_{IH}	High-level input leakage current STB	V_{CC} = V_{IO} = STB = 5.25V	–2		2	µA
I_{IL}	Low-level input leakage current STB	V_{CC}= V_{IO} = 5.25V, STB = 0V	–20		–2	µA
$I_{LKG(OFF)}$	Unpowered leakage current	STB = 5.25V, V_{CC} = V_{IO} = 0V	–1	0	1	µA

(1) All typical values are at 25°C and supply voltages of V_{CC} = 5V. R_L = 60Ω over operating free-air temperature range (unless otherwise noted)

(2) For the bus output voltage (recessive) will be the same if the device is in normal mode with STB terminal LOW or if the device is in standby mode with the STB terminal is HIGH.

ADVANCE INFORMATION

ADVANCE INFORMATION

6.9 Switching Characteristics

Over recommended operating conditions with TJ = -40℃ to 150℃ (unless otherwise noted)

PARAMETER		TEST CONDITIONS	MIN	TYP	MAX	UNIT
Device Switching Characteristics						
$t_{PROP(LOOP1)}$	Total loop delay, driver input (TXD) to receiver output (RXD), recessive to dominant	Normal mode, V_{IO} = 3V to 5V, R_L = 60Ω, C_L = 100pF, C_{L_RXD} = 15pF		100	220	ns
$t_{PROP(LOOP2)}$	Total loop delay, driver input (TXD) to receiver output (RXD), dominant to recessive	Normal mode, V_{IO} = 3V to 5V, R_L = 60Ω, C_L = 100pF, C_{L_RXD} = 15pF		110	220	ns
t_{MODE}	Mode change time, from Normal to Standby or from Standby to Normal				45	µs
t_{WK_FILTER}	Filter time for a valid wake-up pattern		0.5		1.8	µs
$t_{WK_TIMEOUT}$	Bus wake-up timeout value		0.8		6	ms
Driver Switching Characteristics						
t_{pHR}	Propagation delay time, high TXD to driver recessive (dominant to recessive)	R_L = 60Ω, C_L = 100pF, R_{CM} = open		50		ns
t_{pLD}	Propagation delay time, low TXD to driver dominant (recessive to dominant)			45		ns
$t_{sk(p)}$	Pulse skew (|tpHR - tpLD|)			4		ns
t_R	Differential output signal rise time			32		ns
t_F	Differential output signal fall time			27		ns
t_{TXD_DTO}	Dominant timeout	R_L = 60Ω, C_L = 100pF	0.8		6.5	ms
Receiver Switching Characteristics						
t_{pRH}	Propagation delay time, bus recessive input to high output (dominant to recessive)	C_{L_RXD} = 15pF		75		ns
t_{pDL}	Propagation delay time, bus dominant input to low output (recessive to dominant)			70		ns
t_R	RXD output signal rise time			10		ns
t_F	RXD output signal fall time			10		ns
FD Timing Characteristics						
$t_{\Delta Bit(Bus)}$	Transmitted recessive bit width variation: $t_{BIT(TXD)}$ = 500ns	R_L = 60Ω, C_L = 100pF, C_{L_RXD} = 15pF $t_{\Delta Bit(Bus)} = t_{BIT(Bus)} - t_{BIT(TXD)}$	-65		30	ns
$t_{\Delta Bit(Bus)}$	Transmitted recessive bit width variation: $t_{BIT(TXD)}$ = 200ns	R_L = 60Ω, C_L = 100pF, C_{L_RXD} = 15pF $t_{\Delta Bit(Bus)} = t_{BIT(Bus)} - t_{BIT(TXD)}$	-45		10	ns
$t_{\Delta Bit(RXD)}$	Received recessive bit width variation: $t_{BIT(TXD)}$ = 500ns	R_L = 60Ω, C_L = 100pF, C_{L_RXD} = 15pF $t_{\Delta Bit(RXD)} = t_{BIT(RXD)} - t_{BIT(TXD)}$	-100		50	ns
$t_{\Delta Bit(RXD)}$	Received recessive bit width variation: $t_{BIT(TXD)}$ = 200ns	R_L = 60Ω, C_L = 100pF, C_{L_RXD} = 15pF $t_{\Delta Bit(RXD)} = t_{BIT(RXD)} - t_{BIT(TXD)}$	-80		20	ns
$t_{\Delta REC}$	Receiver timing symmetry with $t_{BIT(TXD)}$ = 500ns	R_L = 60Ω, C_L = 100pF,C_{L_RXD} = 15pF $\Delta t_{REC} = t_{BIT(RXD)} - t_{BIT(BUS)}$	-65		40	ns
$t_{\Delta REC}$	Receiver timing symmetry with $t_{BIT(TXD)}$ = 200ns		-45		15	ns

Copyright © 2026 Texas Instruments Incorporated

6.10 Typical Characteristics

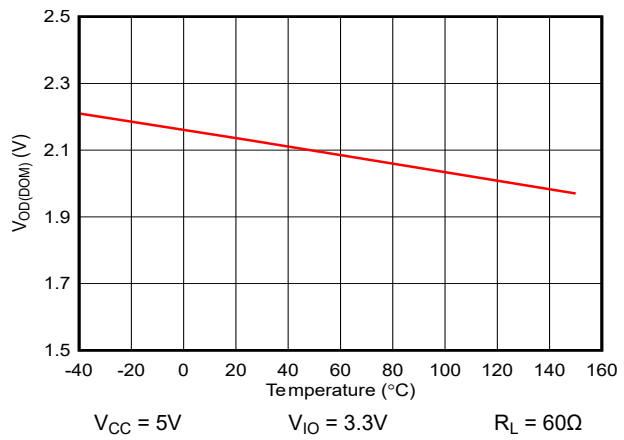

Figure 6-1. $V_{OD(DOM)}$ vs Temperature

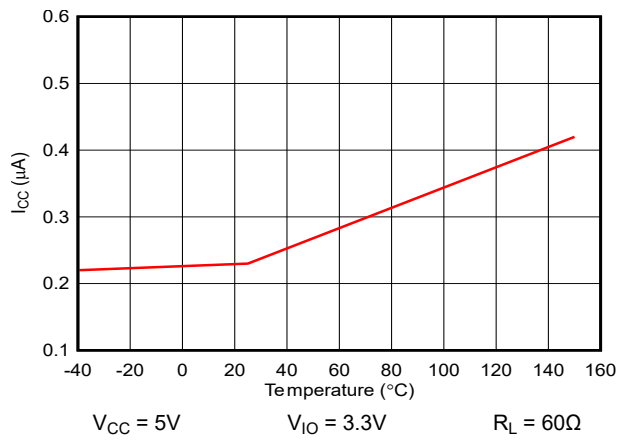

Figure 6-2. I_{CC} Silent vs Temperature

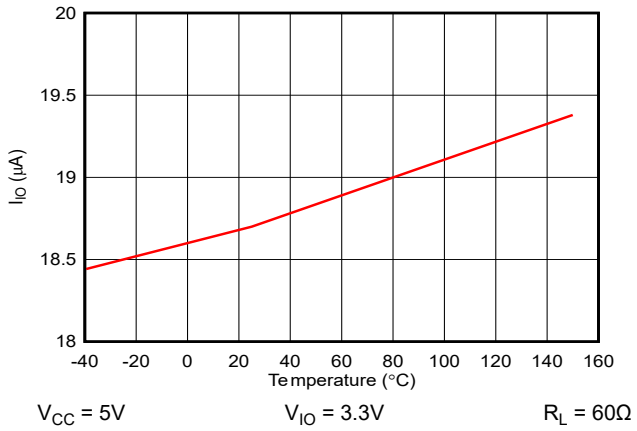

Figure 6-3. I_{IO} Silent vs Temperature

ADVANCE INFORMATION

ADVANCE INFORMATION

7 Parameter Measurement Information

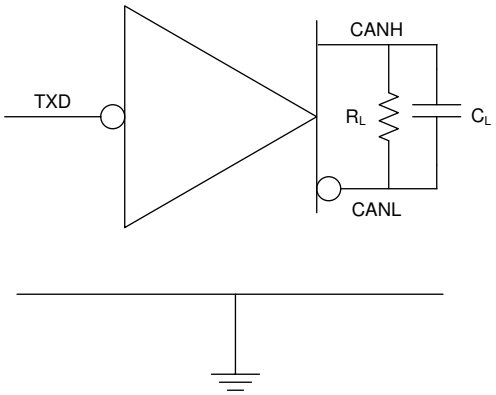

Figure 7-1. I_{CC} Test Circuit

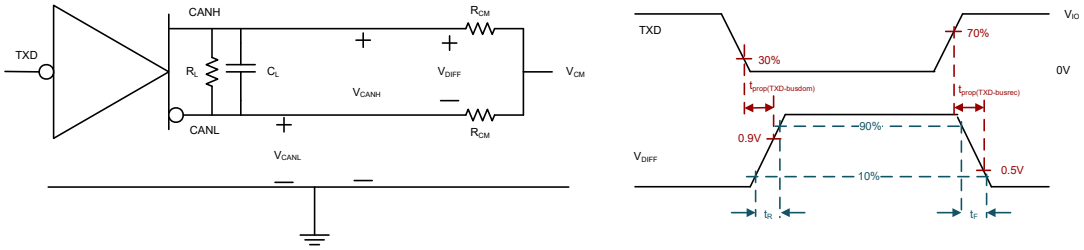

Figure 7-2. Driver Test Circuit and Measurement

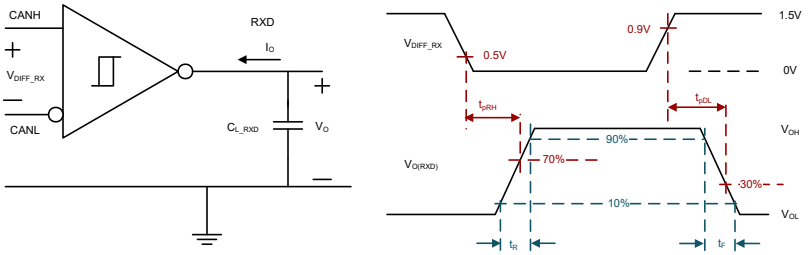

Figure 7-3. Receiver Test Circuit and Measurement

Copyright © 2026 Texas Instruments Incorporated

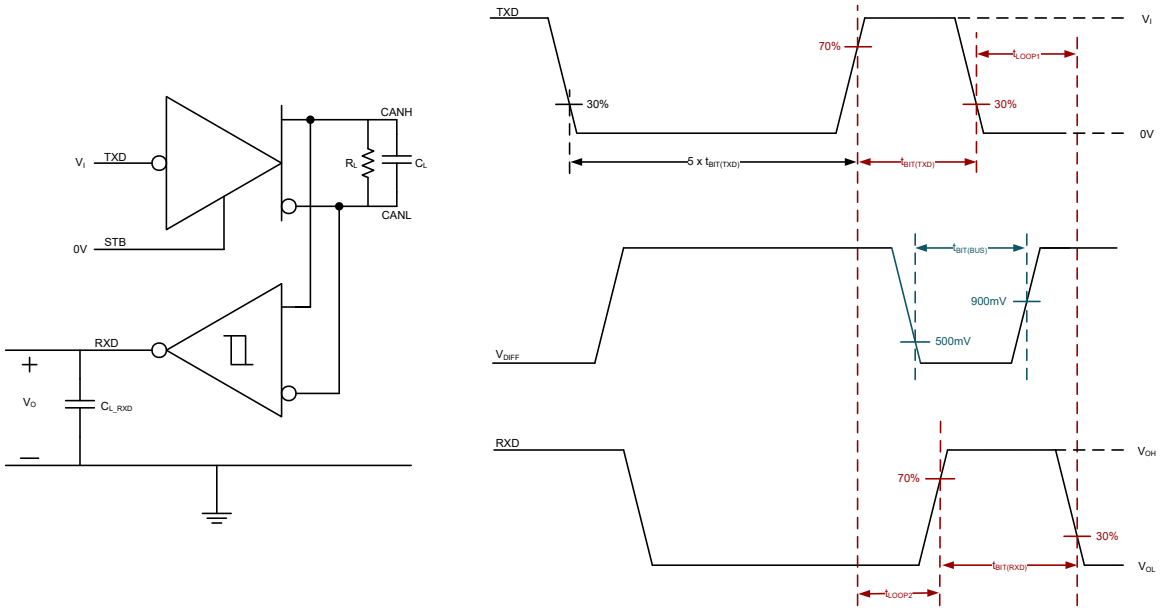

Figure 7-4. Transmitter and Receiver Timing Test Circuit and Measurement

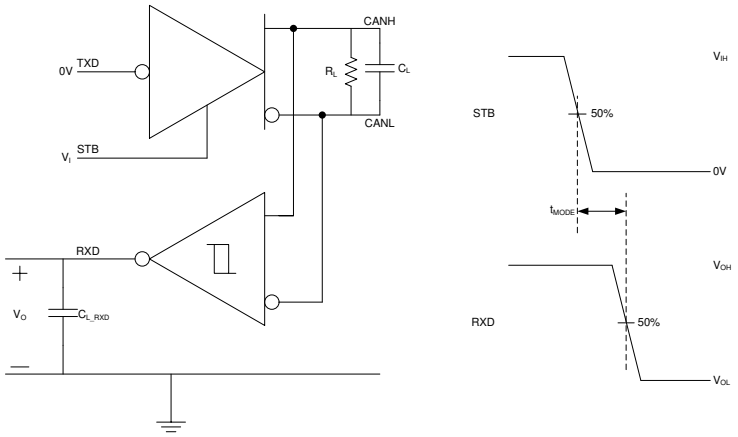

Figure 7-5. t_{MODE} Test Circuit and Measurement

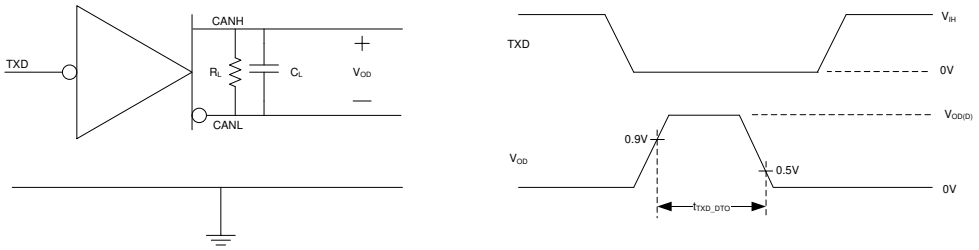

Figure 7-6. TXD Dominant Timeout Test Circuit and Measurement

ADVANCE INFORMATION

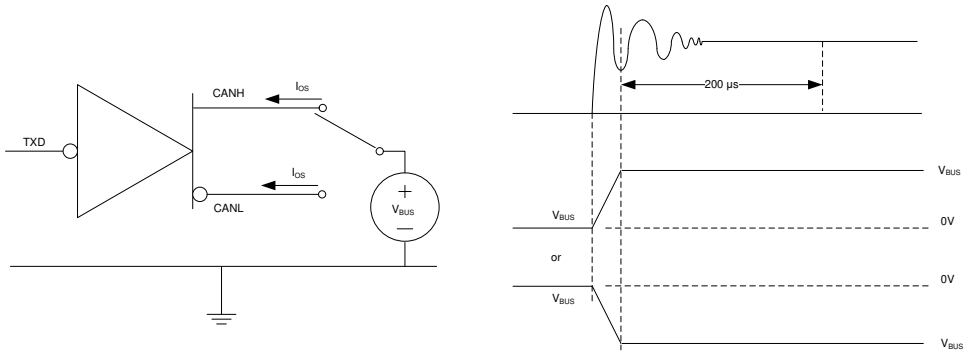

Figure 7-7. Driver Short-Circuit Current Test and Measurement

ADVANCE INFORMATION

Copyright © 2026 Texas Instruments Incorporated

8 Detailed Description

8.1 Overview

The device is compatible with the specifications of the ISO 11898-2:2024 high-speed CAN (Controller Area Network) physical layer standard. The transceivers provide several different protection features for the stringent automotive system requirements while also supporting CAN FD data rates up to 5Mbps.

The device supports the following CAN and CAN FD standards:

- Physical layer compatibility:
  - ISO 11898-2:2024 High speed medium access unit
  - SAE J2284-1: High Speed CAN (HSC) for Vehicle Applications at 125kbps
  - SAE J2284-2: High Speed CAN (HSC) for Vehicle Applications at 250kbps
  - SAE J2284-3: High Speed CAN (HSC) for Vehicle Applications at 500kbps
  - SAE J2284-4: High-Speed CAN (HSC) for Vehicle Applications at 500kbps with CAN FD Data at 2Mbps
  - SAE J2284-5: High-Speed CAN (HSC) for Vehicle Applications at 500kbps with CAN FD Data at 5Mbps

ADVANCE INFORMATION

ADVANCE INFORMATION

8.2 Functional Block Diagram

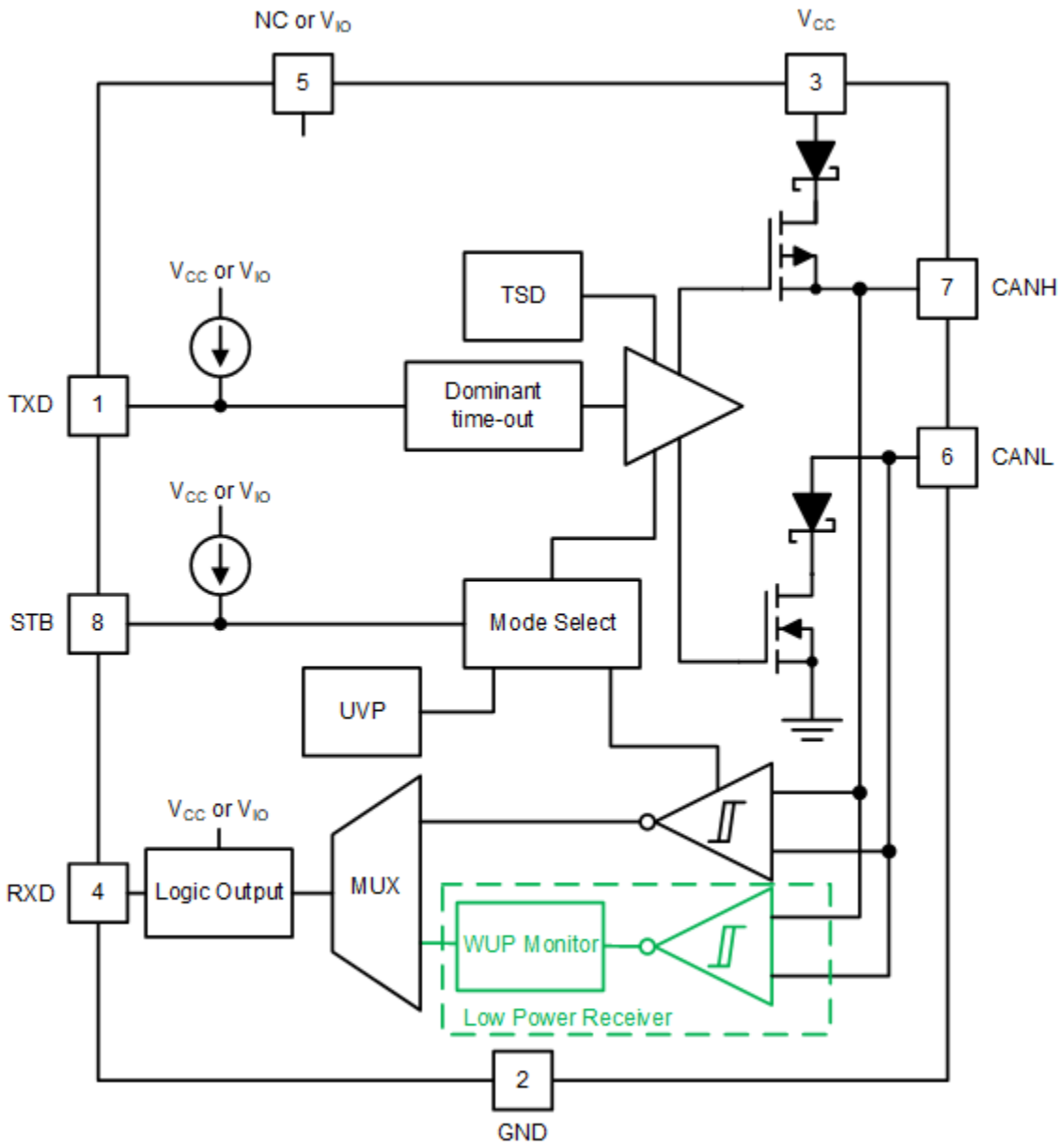

8.3 Feature Description

8.3.1 Pin Description

8.3.1.1 TXD

The TXD input is a logic-level signal, referenced to either V_{CC} or V_{IO} from a CAN controller to the transceiver.

8.3.1.2 GND

GND is the ground pin of the transceiver. The pin must be connected to the PCB ground.

8.3.1.3 V_{CC}

V_{CC} provides the 5V power supply to the CAN transceiver.

Copyright © 2026 Texas Instruments Incorporated

8.3.1.4 RXD

RXD is the logic-level signal, referenced to either V_{CC} or V_{IO}, from the TCAN944-Q1 to a CAN controller. This pin is only driven once V_{IO} is present.

8.3.1.5 V_{IO}

The V_{IO} pin provides the digital I/O voltage to match the CAN controller voltage which avoids the requirement for a level shifter. V_{IO} supports voltages from 2.9V to 5.25V providing the widest range of controller support.

8.3.1.6 CANH and CANL

The CANH and CANL pins are the CAN high and CAN low differential bus pins. These pins are internally connected to the CAN transmitter, receiver and the low-power wake-up receiver.

8.3.1.7 STB (Standby)

The STB pin is an input pin used for mode control of the transceiver. The STB pin can be supplied from either the system processor or from a static system voltage source. If normal mode is the only intended mode of operation, the STB pin can be tied directly to GND.

8.3.2 CAN Bus States

The CAN bus has two logical states during operation, recessive and dominant. See Figure 8-1 and Figure 8-2.

A dominant bus state occurs when the bus is driven differentially and corresponds to a logic low on the TXD and RXD pins. A recessive bus state occurs when the bus is biased to $V_{CC}/2$ via the high-resistance internal input resistors (R_{IN}) of the receiver and corresponds to a logic high on the TXD and RXD pins.

A dominant state overwrites the recessive state during arbitration. Multiple CAN nodes may be transmitting a dominant bit at the same time during arbitration, and in this case, the differential voltage of the bus is greater than the differential voltage of a single driver.

The TCAN944(V)-Q1 transceiver implements a low-power standby (STB) mode which enables a third bus state where the bus pins are weakly biased to ground via the high resistance internal resistors of the receiver. See Figure 8-1 and Figure 8-2.

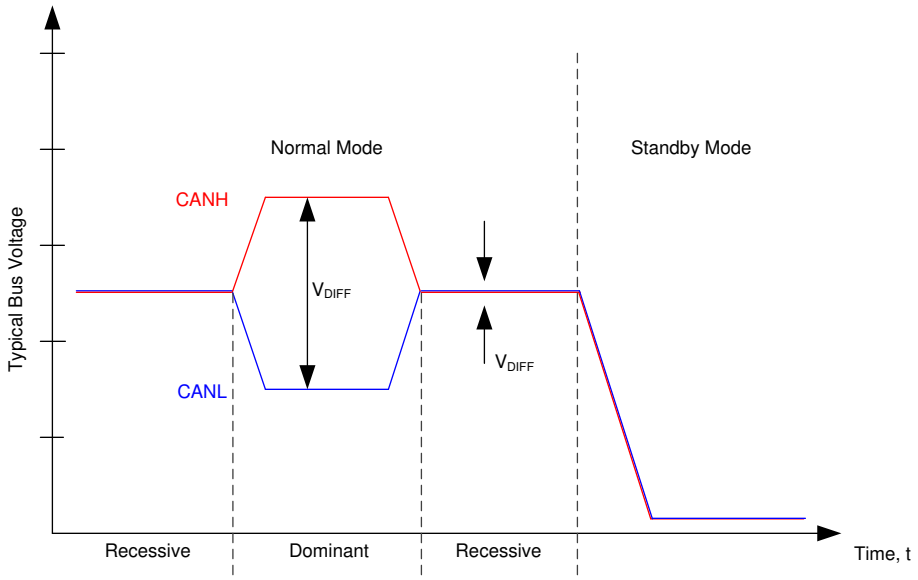

Figure 8-1. Bus States

ADVANCE INFORMATION

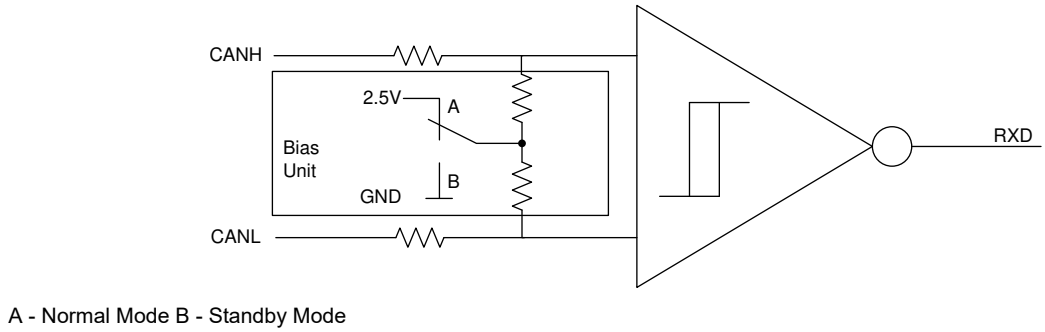

Figure 8-2. Simplified Recessive Common Mode Bias Unit and Receiver

8.3.3 TXD Dominant Timeout (DTO)

During normal mode, the only mode where the CAN driver is active, the TXD DTO circuit prevents the local node from blocking network communication in the event of a hardware or software failure where TXD is held dominant longer than the timeout period t_{TXD_DTO}. The TXD DTO circuit is triggered by a falling edge on TXD. If no rising edge is seen before the timeout period of the circuit, t_{TXD_DTO}, the CAN driver is disabled. This frees the bus for communication between other nodes on the network. The CAN driver is reactivated when a recessive signal is seen on the TXD pin; thus, clearing the dominant time out. The receiver remains active and biased to $V_{CC}/2$ and the RXD output reflects the activity on the CAN bus during the TXD DTO fault.

The minimum dominant TXD time allowed by the TXD DTO circuit limits the minimum possible transmitted data rate of the device. The CAN protocol allows a maximum of eleven successive dominant bits (on TXD) for the worst case, where five successive dominant bits are followed immediately by an error frame. The minimum transmitted data rate can be calculated using Equation 1.

$$\text{Minimum Data Rate} = 11\text{bits} / t_{TXD_DTO} = 11\text{bits} / 0.8\text{ms} = 13.75\text{kbps} \quad (1)$$

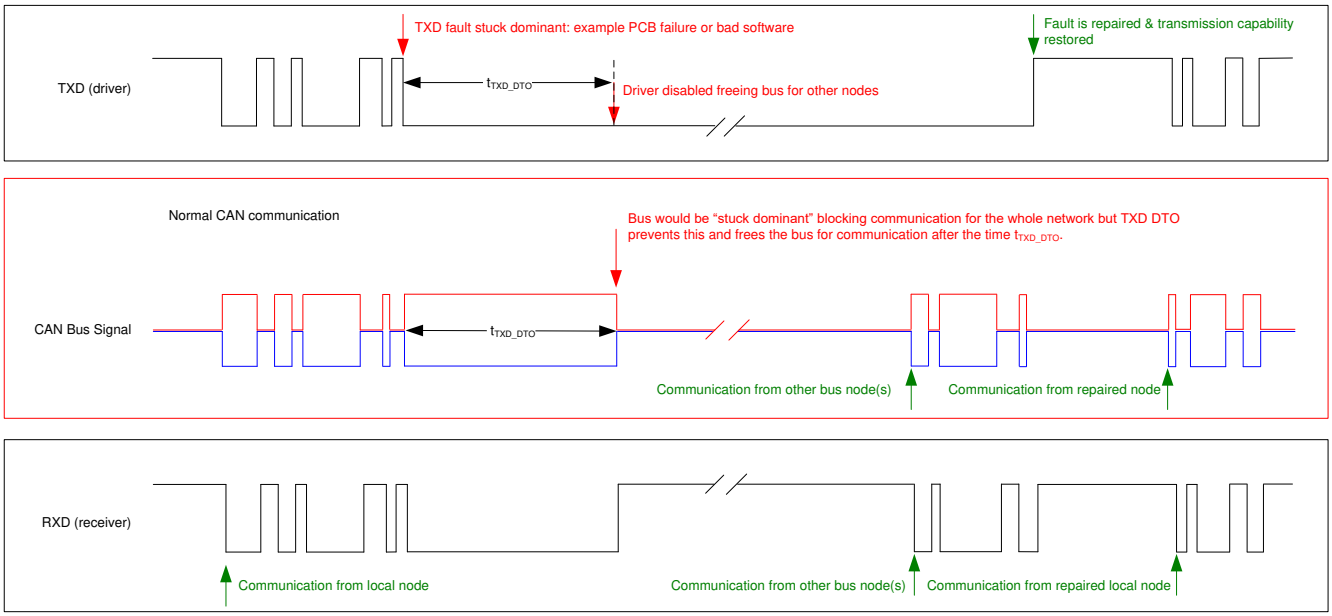

Figure 8-3. Example Timing Diagram for TXD Dominant Timeout

8.3.4 CAN Bus Short-Circuit Current Limiting

The TCAN944(V)-Q1 has several protection features that limit the short-circuit current when a CAN bus line is shorted. These include CAN driver current limiting in the dominant and recessive states and TXD dominant state

ADVANCE INFORMATION

Copyright © 2026 Texas Instruments Incorporated

timeout. Which prevents permanently having the higher short-circuit current of a dominant state in a system fault. During CAN communication, the bus switches between the dominant and recessive states. The short-circuit current may be viewed as either the current during each bus state or as a DC average current. When selecting termination resistors or a common-mode choke for the CAN design, the average power rating, $I_{OS(AVG)}$, are used. The percentage dominant is limited by the TXD DTO and the CAN protocol. Which has forced state changes and recessive bits due to bit stuffing, control fields, and interframe space. Providing a minimum amount of recessive time on the bus even if the data field contains a high percentage of dominant bits.

The average short-circuit current of the bus depends on the ratio of recessive to dominant bits and their respective short-circuit currents. The average short-circuit current may be calculated using Equation 2.

$$I_{OS(AVG)} = \%\ Transmit \times [(\%\ REC_Bits \times I_{OS(SS)_REC}) + (\%\ DOM_Bits \times I_{OS(SS)_DOM})] + [\%\ Receive \times I_{OS(SS)_REC}] \quad (2)$$

Where:

- $I_{OS(AVG)}$ is the average short-circuit current
- % Transmit is the percentage the node is transmitting CAN messages
- % Receive is the percentage the node is receiving CAN messages
- % REC_Bits is the percentage of recessive bits in the transmitted CAN messages
- % DOM_Bits is the percentage of dominant bits in the transmitted CAN messages
- $I_{OS(SS)_REC}$ is the recessive steady state short-circuit current
- $I_{OS(SS)_DOM}$ is the dominant steady state short-circuit current

This short circuit current and the possible fault cases of the network are taken into consideration when sizing the power supply used to generate the transceivers V_{CC} supply.

8.3.5 Thermal Shutdown (TSD)

If the junction temperature of the TCAN944(V)-Q1 exceeds the thermal shutdown threshold, T_{TSD}, the device turns off the CAN driver circuitry and blocks the TXD to bus transmission path. The shutdown condition is cleared when the junction temperature of the device drops below T_{TSD}. The CAN bus pins are biased to $V_{CC}/2$ during a TSD fault and the receiver to RXD path remains operational. The TCAN944(V)-Q1 TSD circuit includes hysteresis which prevents the CAN driver output from oscillating during a TSD fault.

8.3.6 Undervoltage Lockout

The supply pins, V_{CC} and V_{IO}, have undervoltage detection that places the device into a protected state. This protects the bus during an undervoltage event on either supply pin.

Table 8-1. Undervoltage Lockout - TCAN944-Q1

V_{CC}	DEVICE STATE	BUS	RXD PIN
> UV_{VCC}	Normal	Per TXD	Mirrors bus
< UV_{VCC}	Protected	High impedance	High impedance

Table 8-2. Undervoltage Lockout - TCAN944V-Q1

V_{CC}	V_{IO}	DEVICE STATE	BUS	RXD PIN
> UV_{VCC}	> UV_{VIO}	Normal	Per TXD	Mirrors bus
< UV_{VCC}	> UV_{VIO}	STB = High: Standby Mode	Weakly biased to GND	V_{IO}: Remote wake request See Remote Wake Request via Wake-Up Pattern (WUP) in Standby Mode
		STB = Low: Protected Mode		Recessive
> UV_{VCC}	< UV_{VIO}	Protected	High impedance	High impedance
< UV_{VCC}	< UV_{VIO}			

Once the undervoltage condition is cleared and t_{MODE} has expired, the TCAN944-Q1 transitions to normal mode. The host controller can again send and receive CAN traffic.

ADVANCE INFORMATION

8.3.7 Unpowered Device

The TCAN944(V)-Q1 is designed to be a passive or no load to the CAN bus if the device is unpowered. The bus pins were designed to have low leakage currents when the device is unpowered, so the device does not load the bus. This is critical if some nodes of the network are unpowered while the rest of the of network remains operational.

The logic pins also have low leakage currents when the device is unpowered, so the pins do not load other circuits which may remain powered.

8.3.8 Floating pins

The device has internal pull-ups on critical pins which place the device into known states if the pin floats. This internal bias cannot be relied upon by design though, especially in noisy environments. Instead internal bias must be considered a failsafe protection feature.

When a CAN controller supporting open-drain outputs is used an adequate external pull-up resistor must be chosen. This makes sure the TXD output of the CAN controller maintains acceptable bit time to the input of the CAN transceiver. See Table 8-3 for details on pin bias conditions.

Table 8-3. Pin Bias

Pin	Pull-up or Pull-down	Comment
TXD	Pull-up	Weakly biases TXD towards recessive to prevent bus blockage or TXD DTO triggering
STB	Pull-up	Weakly biases STB towards low-power standby mode to prevent excessive system power

8.4 Device Functional Modes

8.4.1 Operating Modes

The TCAN944(V)-Q1 has two main operating modes, normal mode and standby mode. Operating mode selection is made by applying a high or low level to the STB pin.

Table 8-4. Operating Modes

STB	Device Mode	Driver	Receiver	RXD Pin
High	Low current standby mode with bus wake-up	Disabled	Low-power receiver and bus monitor enable	High (recessive) until valid WUP is received See Remote Wake Request via Wake-Up Pattern (WUP) in Standby Mode
Low	Normal Mode	Enabled	Enabled	Mirrors bus state

8.4.2 Normal Mode

This is the normal operating mode of the TCAN944(V)-Q1. The CAN driver and receiver are fully operational and CAN communication is bi-directional.

The driver is translating a digital input on the TXD input to a differential output on the CANH and CANL bus pins.

The receiver is translating the differential signal from CANH and CANL to a digital output on the RXD output.

8.4.3 Standby Mode

This is the low-power mode of the TCAN944(V)-Q1. The CAN driver and main receiver are switched off and bi-directional CAN communication is not possible. The low-power receiver and bus monitor circuits are enabled to allow for RXD wake-up requests via the CAN bus. A wake-up request is output to RXD as shown in Figure 8-4. The local CAN protocol controller should monitor RXD for transitions (high-to-low) and reactivate the device to normal mode by pulling the STB pin low. The CAN bus pins are weakly pulled to GND in this mode; see Figure 8-1 and Figure 8-2.

Copyright © 2026 Texas Instruments Incorporated

In standby mode, only the V_{IO} supply is required; therefore, the V_{CC} may be switched off for additional system level current savings.

8.4.3.1 Remote Wake Request via Wake-Up Pattern (WUP) in Standby Mode

The TCAN944(V)-Q1 supports a remote wake-up request that is used to indicate to the host controller that the bus is active and the node needs to return to normal operation.

The device uses the multiple filtered dominant wake-up pattern (WUP) from the ISO 11898-2:2024 standard to qualify bus activity. Once a valid WUP has been received, the wake request is indicated to the controller by a falling edge and low period corresponding to a filtered dominant on the RXD output of the TCAN944(V)-Q1.

The WUP consists of a filtered dominant pulse, followed by a filtered recessive pulse, and finally by a second filtered dominant pulse. The first filtered dominant initiates the WUP, and the bus monitor then waits on a filtered recessive; other bus traffic does not reset the bus monitor. Once a filtered recessive is received the bus monitor is waiting for a filtered dominant and again, other bus traffic does not reset the bus monitor. Immediately upon reception of the second filtered dominant the bus monitor recognizes the WUP and drives the RXD output low every time an additional filtered dominant signal is received from the bus.

For a dominant or recessive to be considered filtered, the bus must be in that state for more than the t_{WK_FILTER} time. Due to variability in t_{WK_FILTER} the following scenarios are applicable. Bus state times less than $t_{WK_FILTER(MIN)}$ are never detected as part of a WUP; thus, no wake request is generated. Bus state times between $t_{WK_FILTER(MIN)}$ and $t_{WK_FILTER(MAX)}$ can be detected as part of a WUP and a wake-up request can be generated. Bus state times greater than $t_{WK_FILTER(MAX)}$ are always detected as part of a WUP; thus, a wake request is always generated. See Figure 8-4 for the timing diagram of the wake-up pattern.

The pattern and t_{WK_FILTER} time used for the WUP prevents noise and bus stuck dominant faults from causing false wake-up requests while allowing any valid message to initiate a wake-up request.

The ISO 11898-2:2024 standard has defined times for a short and long wake-up filter time. The t_{WK_FILTER} timing for the device has been picked to be within the minimum and maximum values of both filter ranges. This timing has been chosen such that a single bit time at 500kbps, or two back-to-back bit times at 1Mbps triggers the filter in either bus state. Any CAN frame at 500kbps or less can contain a valid WUP.

For an additional layer of robustness and to prevent false wake-ups, the device implements a wake-up timeout feature. For a remote wake-up event to successfully occur, the entire WUP must be received within the timeout value $t \leq t_{WK_TIMEOUT}$. If not, the internal logic is reset and the transceiver remains in the current state without waking up. The full pattern must then be transmitted again, conforming to the constraints mentioned in this section. See Figure 8-4 for the timing diagram of the wake-up pattern with wake timeout feature.

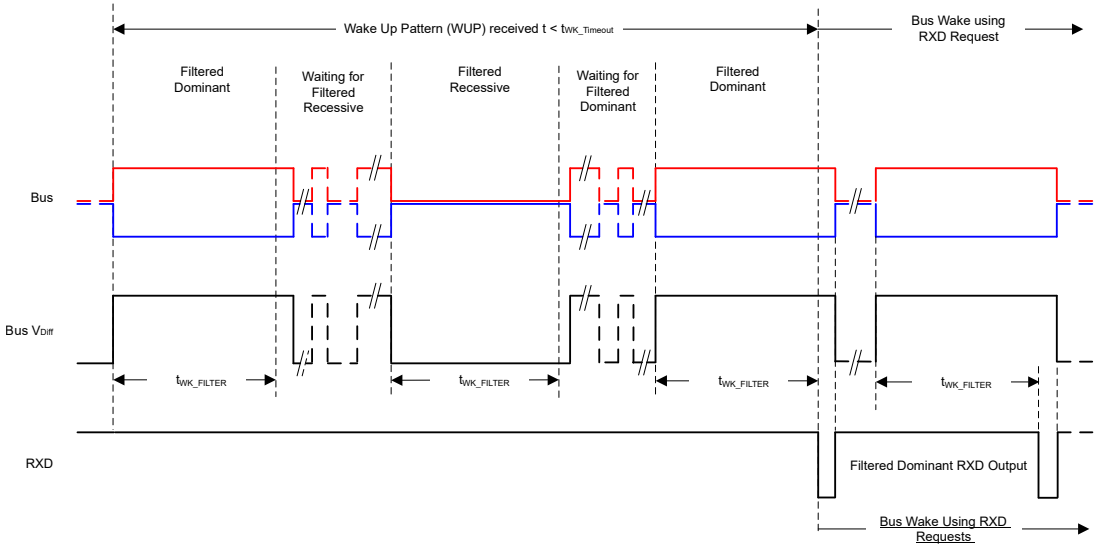

Figure 8-4. Wake-Up Pattern (WUP) with $t_{WK_TIMEOUT}$

ADVANCE INFORMATION

8.4.4 Driver and Receiver Function

The TCAN944-Q1 logic I/Os support CMOS levels with respect to either V_{CC} for 5V systems (TCAN944-Q1) or V_{IO} for compatibility with MCUs that support 3.3V or 5V systems (TCAN944V-Q1).

Table 8-5. Driver Function Table

Device Mode	TXD Input[1]	Bus Outputs		Driven Bus State[2]
		CANH	CANL	
Normal	Low	High	Low	Dominant
	High or open	High impedance	High impedance	Biased recessive
Standby	X	High impedance	High impedance	Biased to ground

(1) X = irrelevant
(2) For bus state and bias see Figure 8-1 and Figure 8-2

Table 8-6. Receiver Function Table Normal and Standby Mode

Device Mode	CAN Differential Inputs $V_{ID} = V_{CANH} – V_{CANL}$	Bus State	RXD Pin
Normal	$V_{ID} \geq 0.9V$	Dominant	Low
	$0.5V < V_{ID} < 0.9V$	Undefined	Undefined
	$V_{ID} \leq 0.5V$	Recessive	High
Standby	$V_{ID} \geq 1.15V$	Dominant	High Low if a remote wake event occurred See Figure 8-4
	$0.4V < V_{ID} < 1.15V$	Undefined	
	$V_{ID} \leq 0.4V$	Recessive	
Any	Open ($V_{ID} \approx 0V$)	Open	High

ADVANCE INFORMATION

Copyright © 2026 Texas Instruments Incorporated

9 Application Information Disclaimer

Note

Information in the following applications sections is not part of the TI component specification, and TI does not warrant its accuracy or completeness. TI's customers are responsible for determining suitability of components for their purposes, as well as validating and testing their design implementation to confirm system functionality.

9.1 Application Information

The TCAN944(V)-Q1 transceiver can be used in applications with a host controller or FPGA that includes the link layer portion of the CAN protocol. Figure 9-1 shows a typical configuration for 5V controller applications. The bus termination is shown for illustrative purposes.

9.2 Typical Application

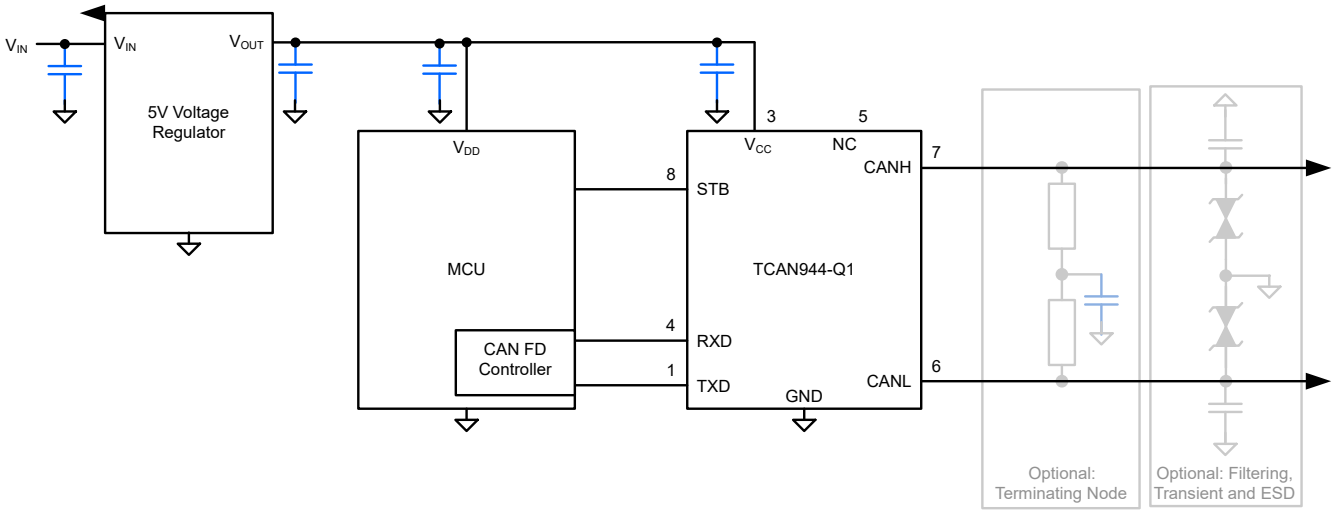

Figure 9-1. Transceiver Application Using 5V IO Connections

9.2.1 Design Requirements

9.2.1.1 CAN Termination

Termination can be a single 120Ω resistor at each end of the bus, either on the cable or in a terminating node. If filtering and stabilization of the common-mode voltage of the bus is desired, then split termination can be used, see Figure 9-2. Split termination improves the electromagnetic emissions behavior of the network by filtering higher-frequency common-mode noise that can be present on the differential signal lines.

ADVANCE INFORMATION

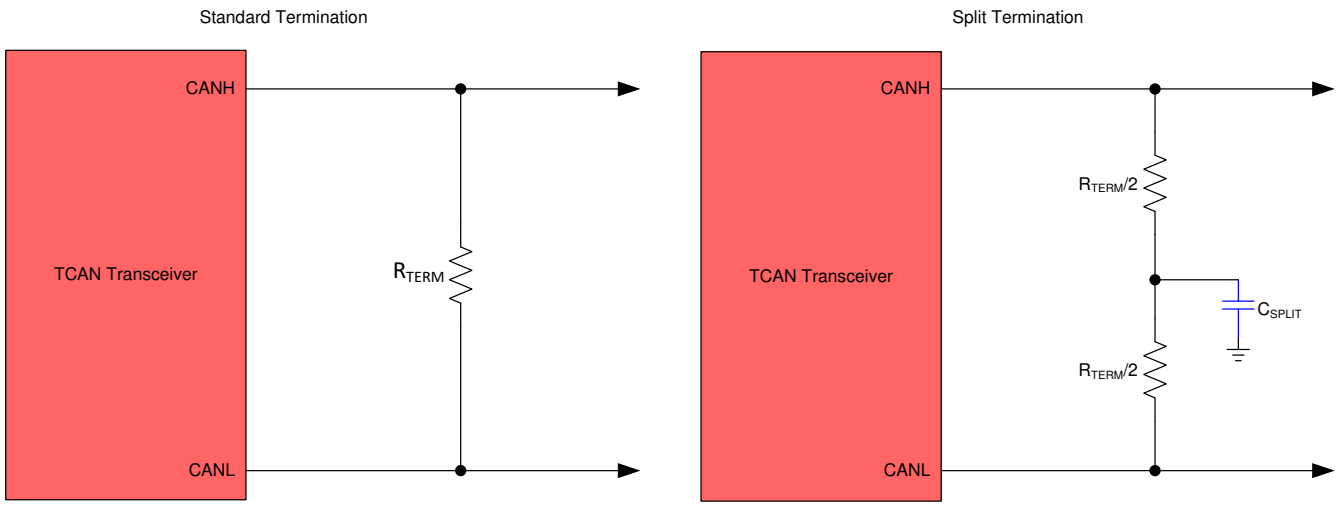

Figure 9-2. CAN Bus Termination Concepts

9.2.2 Detailed Design Procedures

9.2.2.1 Bus Loading, Length and Number of Nodes

A typical CAN application can have a maximum bus length of 40 meters and maximum stub length of 0.3m. However, with careful design, users can have longer cables, longer stub lengths, and many more nodes to a bus. A high number of nodes requires a transceiver with high input impedance such as the TCAN944V-Q1.

Many CAN organizations and standards have scaled the use of CAN for applications outside the original ISO 11898-2 standard. Various CAN standards made system level trade off decisions for data rate, cable length, and parasitic loading of the bus. Examples of these CAN systems level specifications are ARINC 825, CANopen, DeviceNet, SAE J2284, SAE J1939, and NMEA 2000.

A CAN network system design is a series of tradeoffs. In the ISO 11898-2:2024 specification the driver differential output is specified with a bus load that can range from 50Ω to 65Ω where the differential output must be greater than 1.5V. The TCAN944(V)-Q1 family is specified to meet the 1.5V requirement down to 50Ω and is specified to meet 1.4V differential output at 45Ω bus load. The differential input resistance of the device is a minimum of 18kΩ. If 50 TCAN944V-Q1 transceivers are in parallel on a bus, this is equivalent to a 360Ω differential load in parallel with the nominal 60Ω bus termination which gives a total bus load of approximately 51Ω. Therefore, the TCAN944(V)-Q1 family theoretically supports over 50 transceivers on a single bus segment. For a CAN network design margin must be given for signal loss across the system and cabling, parasitic loadings, timing, network imbalances, ground offsets, and signal integrity; thus, a practical maximum number of nodes is often lower. Bus length can also be extended beyond 40 meters by careful system design and data rate tradeoffs. For example, CANopen network design guidelines allow the network to be up to 1km with changes in the termination resistance, cabling, less than 64 nodes and significantly lowered data rate.

This flexibility in CAN network design is one of the key strengths of the various extensions and additional standards that have been built on the original ISO 11898-2 CAN standard. However, when using this flexibility the CAN network system designer must take the responsibility of good network design to develop robust network operation.

See the application note Controller Area Network Physical layer requirements. The document discusses in detail all system design physical layer parameters.

ADVANCE INFORMATION

Copyright © 2026 Texas Instruments Incorporated

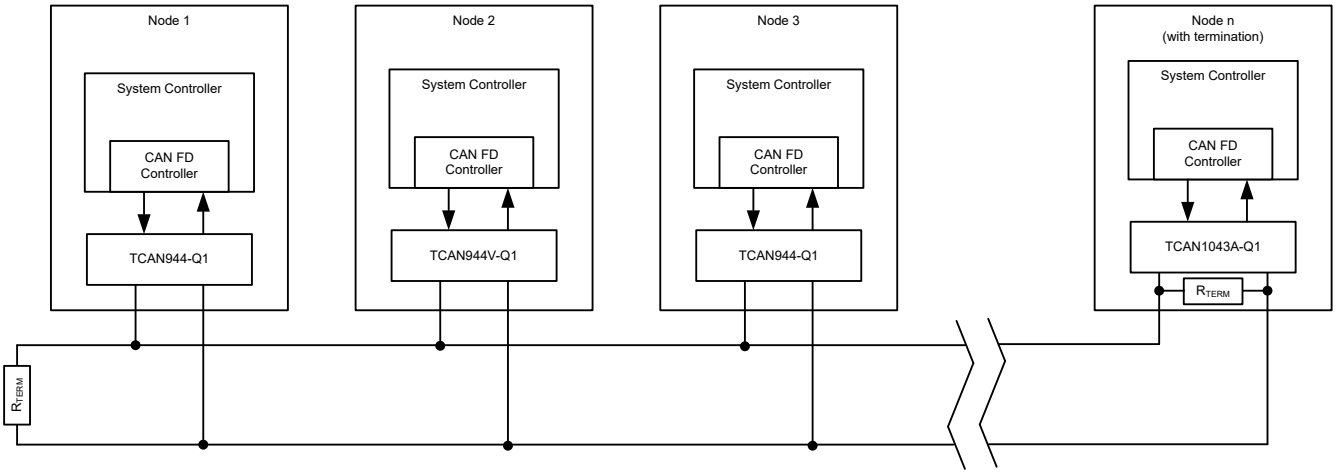

Figure 9-3. Typical CAN Bus

9.2.3 Application Curve

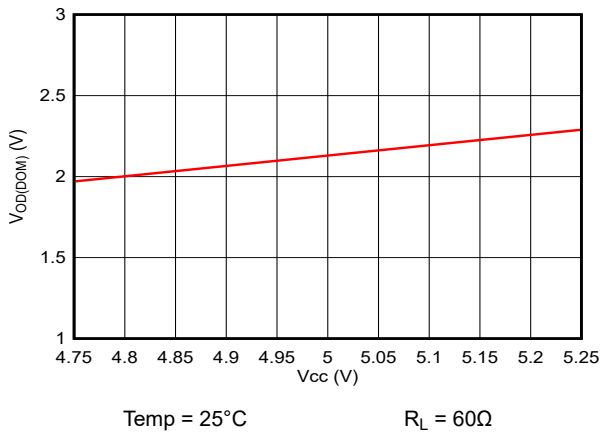

Figure 9-4. $V_{OD(DOM)}$ vs V_{CC}

9.3 System Examples

The TCAN944V-Q1 transceiver is typically used in applications with a host controller or FPGA that includes the link layer portion of the CAN protocol. A 3.3V application is shown in Figure 9-5. The bus termination is shown for illustrative purposes.

ADVANCE INFORMATION

ADVANCE INFORMATION

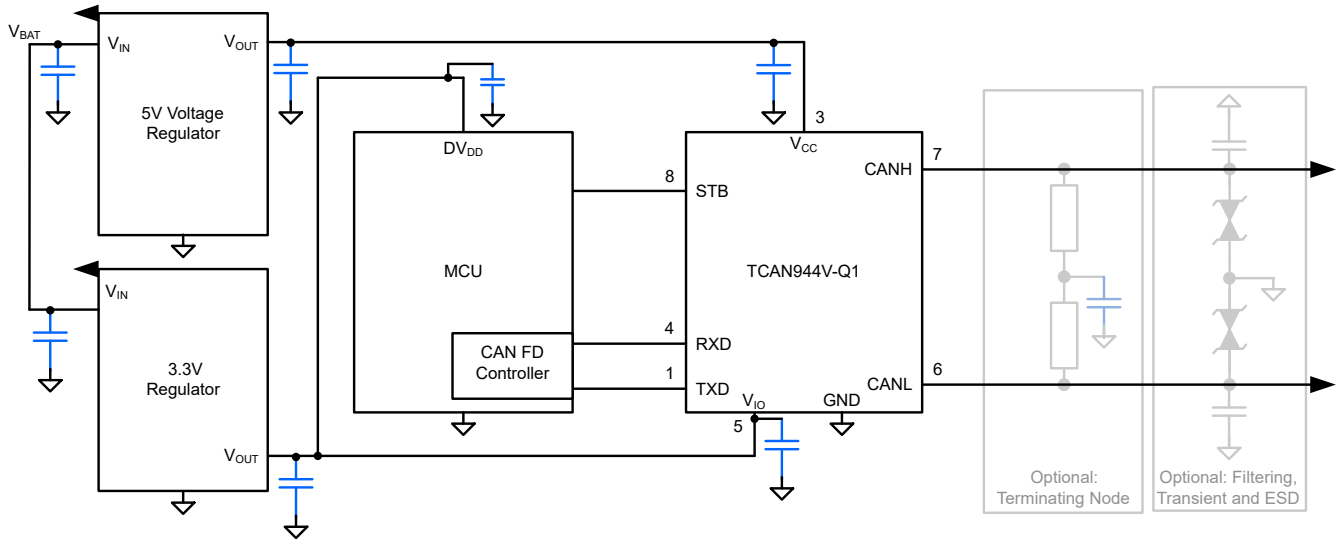

Figure 9-5. Typical Transceiver Application Using 3.3V IO Connections

9.4 Power Supply Recommendations

The TCAN944-Q1 transceiver is designed to operate with a main V_{CC} input voltage supply range between 4.75V and 5.25V.

The TCAN944V-Q1 implements an IO level shifting supply input, V_{IO}, designed for a range between 2.9V and 5.25V.

Both the V_{CC} and V_{IO} inputs must be well regulated. In addition to the power supply filtering a decoupling capacitance, typically 100nF, can be placed near the CAN transceiver main V_{CC} and V_{IO} supply pins.

9.5 Layout

Robust and reliable CAN node design may require special layout techniques depending on the application and design requirements. Since transient disturbances have high frequency content and a wide bandwidth, high-frequency layout techniques must be applied during PCB design.

9.5.1 Layout Guidelines

- Place the protection and filtering circuitry close to the bus connector, J1, to prevent transients, ESD, and noise from propagating onto the board. This layout example shows a optional transient voltage suppression (TVS) diode, D1, which may be implemented if the system-level requirements exceed the specified rating of the transceiver. This example also shows optional bus filter capacitors C4 and C5.
- Design the bus protection components in the direction of the signal path. Do not force the transient current to divert from the signal path to reach the protection device.
- Decoupling capacitors are placed as close as possible to the supply pins V_{CC} and V_{IO} of transceiver.
- Use at least two vias for supply and ground connections of bypass capacitors and protection devices to minimize trace and via inductance.

Note

High-frequency current follows the path of least impedance and not the path of least resistance.

- This layout example shows how split termination could be implemented on the CAN node. The termination is split into two resistors, R2 and R3, with the center or split tap of the termination connected to ground via capacitor C3. Split termination provides common mode filtering for the bus. See Section 9.2.1.1, Section 8.3.4, and Equation 2 for information on termination concepts and power ratings needed for the termination resistor(s).

Copyright © 2026 Texas Instruments Incorporated

9.5.2 Layout Example

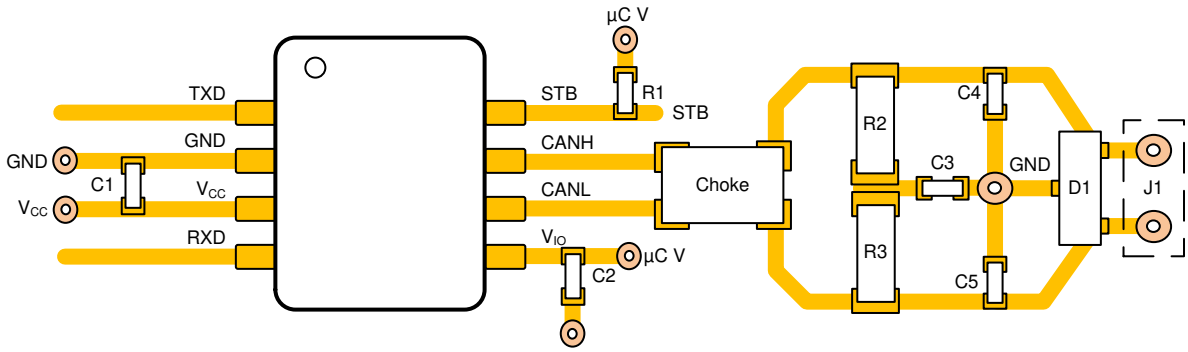

Figure 9-6. Layout Example

ADVANCE INFORMATION

10 Device and Documentation Support

10.1 Receiving Notification of Documentation Updates

To receive notification of documentation updates, navigate to the device product folder on ti.com. Click on *Notifications* to register and receive a weekly digest of any product information that has changed. For change details, review the revision history included in any revised document.

10.2 Support Resources

TI E2E™ support forums are an engineer's go-to source for fast, verified answers and design help — straight from the experts. Search existing answers or ask your own question to get the quick design help you need.

Linked content is provided "AS IS" by the respective contributors. They do not constitute TI specifications and do not necessarily reflect TI's views; see TI's Terms of Use.

10.3 Trademarks

TI E2E™ is a trademark of Texas Instruments.
All trademarks are the property of their respective owners.

10.4 Electrostatic Discharge Caution

This integrated circuit can be damaged by ESD. Texas Instruments recommends that all integrated circuits be handled with appropriate precautions. Failure to observe proper handling and installation procedures can cause damage.

ESD damage can range from subtle performance degradation to complete device failure. Precision integrated circuits may be more susceptible to damage because very small parametric changes could cause the device not to meet its published specifications.

10.5 Glossary

TI Glossary — This glossary lists and explains terms, acronyms, and definitions.

11 Revision History

NOTE: Page numbers for previous revisions may differ from page numbers in the current version.

DATE	REVISION	NOTES
September 2026	*	Initial Release

12 Mechanical, Packaging, and Orderable Information

The following pages include mechanical, packaging, and orderable information. This information is the most current data available for the designated devices. This data is subject to change without notice and revision of this document. For browser-based versions of this data sheet, refer to the left-hand navigation.

Copyright © 2026 Texas Instruments Incorporated

PACKAGING INFORMATION

Orderable part number	Status (1)	Material type (2)	Package | Pins	Package qty | Carrier	RoHS (3)	Lead finish/ Ball material (4)	MSL rating/ Peak reflow (5)	Op temp (°C)	Part marking (6)
PTCAN944DRBRQ1	Active	Preproduction	SON (DRB) | 8	3000 | LARGE T&R	-	Call TI	Call TI	-40 to 150	
PTCAN944DRQ1	Active	Preproduction	SOIC (D) | 8	2500 | LARGE T&R	-	Call TI	Call TI	-40 to 150	
PTCAN944VDRBRQ1	Active	Preproduction	SON (DRB) | 8	3000 | LARGE T&R	-	Call TI	Call TI	-40 to 150	
PTCAN944VDRQ1	Active	Preproduction	SOIC (D) | 8	2500 | LARGE T&R	-	Call TI	Call TI	-40 to 150	

(1) **Status:** For more details on status, see our product life cycle.

(2) **Material type:** When designated, preproduction parts are prototypes/experimental devices, and are not yet approved or released for full production. Testing and final process, including without limitation quality assurance, reliability performance testing, and/or process qualification, may not yet be complete, and this item is subject to further changes or possible discontinuation. If available for ordering, purchases will be subject to an additional waiver at checkout, and are intended for early internal evaluation purposes only. These items are sold without warranties of any kind.

(3) **RoHS values:** Yes, No, RoHS Exempt. See the TI RoHS Statement for additional information and value definition.

(4) **Lead finish/Ball material:** Parts may have multiple material finish options. Finish options are separated by a vertical ruled line. Lead finish/Ball material values may wrap to two lines if the finish value exceeds the maximum column width.

(5) **MSL rating/Peak reflow:** The moisture sensitivity level ratings and peak solder (reflow) temperatures. In the event that a part has multiple moisture sensitivity ratings, only the lowest level per JEDEC standards is shown. Refer to the shipping label for the actual reflow temperature that will be used to mount the part to the printed circuit board.

(6) **Part marking:** There may be an additional marking, which relates to the logo, the lot trace code information, or the environmental category of the part.

Multiple part markings will be inside parentheses. Only one part marking contained in parentheses and separated by a "~" will appear on a part. If a line is indented then it is a continuation of the previous line and the two combined represent the entire part marking for that device.

Important Information and Disclaimer: The information provided on this page represents TI's knowledge and belief as of the date that it is provided. TI bases its knowledge and belief on information provided by third parties, and makes no representation or warranty as to the accuracy of such information. Efforts are underway to better integrate information from third parties. TI has taken and continues to take reasonable steps to provide representative and accurate information but may not have conducted destructive testing or chemical analysis on incoming materials and chemicals. TI and TI suppliers consider certain information to be proprietary, and thus CAS numbers and other limited information may not be available for release.

In no event shall TI's liability arising out of such information exceed the total purchase price of the TI part(s) at issue in this document sold by TI to Customer on an annual basis.

GENERIC PACKAGE VIEW

DRB 8 VSON - 1 mm max height

PLASTIC SMALL OUTLINE - NO LEAD

Images above are just a representation of the package family, actual package may vary.
Refer to the product data sheet for package details.

4203482/L

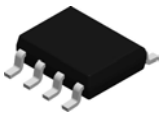

PACKAGE OUTLINE

D0008A

SOIC - 1.75 mm max height

SMALL OUTLINE INTEGRATED CIRCUIT

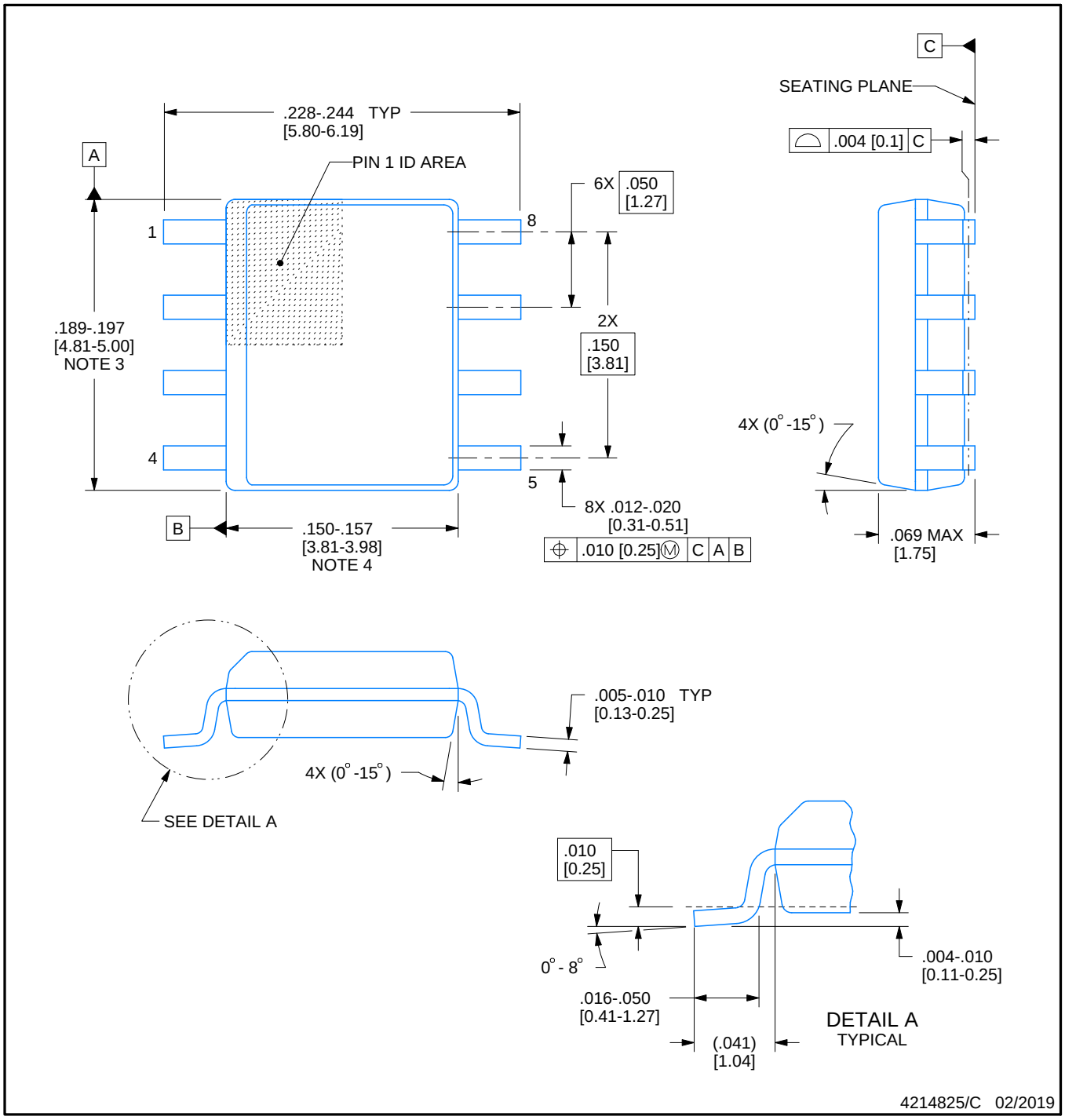

NOTES:

1. Linear dimensions are in inches [millimeters]. Dimensions in parenthesis are for reference only. Controlling dimensions are in inches. Dimensioning and tolerancing per ASME Y14.5M.
2. This drawing is subject to change without notice.
3. This dimension does not include mold flash, protrusions, or gate burrs. Mold flash, protrusions, or gate burrs shall not exceed .006 [0.15] per side.
4. This dimension does not include interlead flash.
5. Reference JEDEC registration MS-012, variation AA.

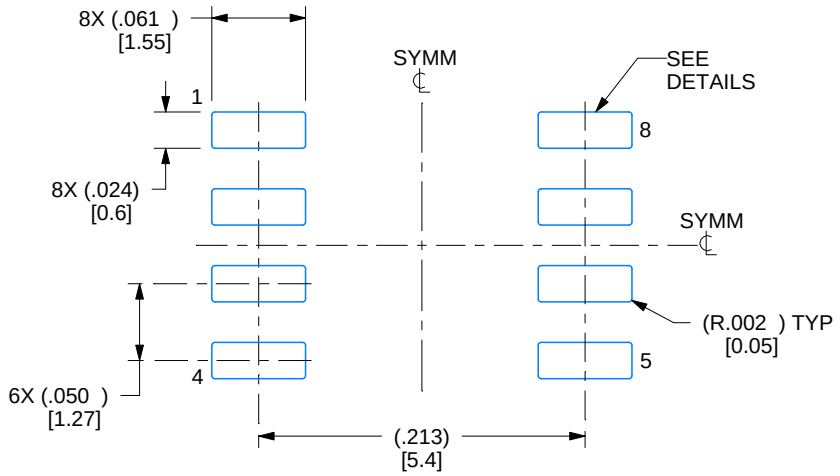

LAND PATTERN EXAMPLE
EXPOSED METAL SHOWN
SCALE:8X

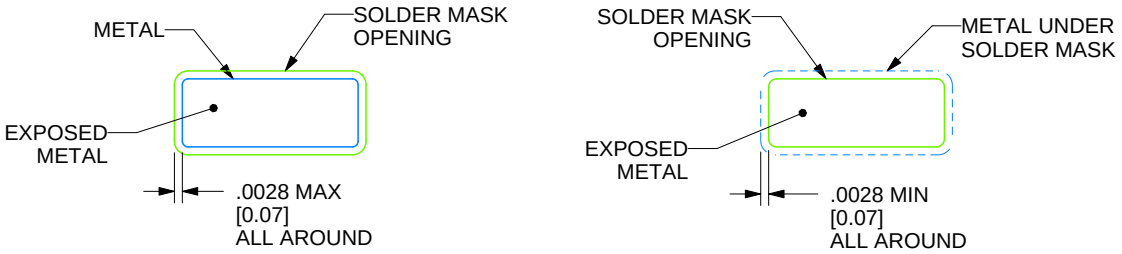

SOLDER MASK DETAILS

4214825/C 02/2019

NOTES: (continued)

6. Publication IPC-7351 may have alternate designs.
7. Solder mask tolerances between and around signal pads can vary based on board fabrication site.

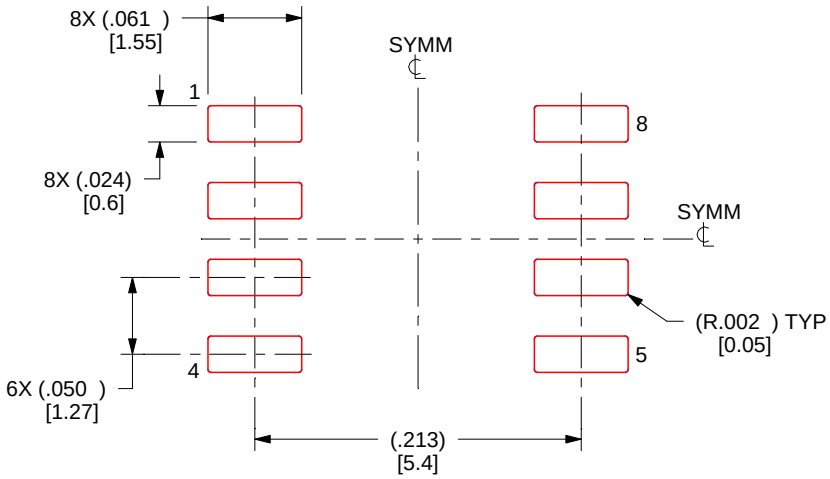

SOLDER PASTE EXAMPLE
BASED ON .005 INCH [0.125 MM] THICK STENCIL
SCALE:8X

4214825/C 02/2019

NOTES: (continued)

8. Laser cutting apertures with trapezoidal walls and rounded corners may offer better paste release. IPC-7525 may have alternate design recommendations.
9. Board assembly site may have different recommendations for stencil design.

IMPORTANT NOTICE AND DISCLAIMER

TI PROVIDES TECHNICAL AND RELIABILITY DATA (INCLUDING DATASHEETS), DESIGN RESOURCES (INCLUDING REFERENCE DESIGNS), APPLICATION OR OTHER DESIGN ADVICE, WEB TOOLS, SAFETY INFORMATION, AND OTHER RESOURCES “AS IS” AND WITH ALL FAULTS, AND DISCLAIMS ALL WARRANTIES, EXPRESS AND IMPLIED, INCLUDING WITHOUT LIMITATION ANY IMPLIED WARRANTIES OF MERCHANTABILITY, FITNESS FOR A PARTICULAR PURPOSE OR NON-INFRINGEMENT OF THIRD PARTY INTELLECTUAL PROPERTY RIGHTS.

These resources are intended for skilled developers designing with TI products. You are solely responsible for (1) selecting the appropriate TI products for your application, (2) designing, validating and testing your application, and (3) ensuring your application meets applicable standards, and any other safety, security, regulatory or other requirements.

These resources are subject to change without notice. TI grants you permission to use these resources only for development of an application that uses the TI products described in the resource. Other reproduction and display of these resources is prohibited. No license is granted to any other TI intellectual property right or to any third party intellectual property right. TI disclaims responsibility for, and you fully indemnify TI and its representatives against any claims, damages, costs, losses, and liabilities arising out of your use of these resources.

TI’s products are provided subject to TI’s Terms of Sale, TI’s General Quality Guidelines, or other applicable terms available either on ti.com or provided in conjunction with such TI products. TI’s provision of these resources does not expand or otherwise alter TI’s applicable warranties or warranty disclaimers for TI products. Unless TI explicitly designates a product as custom or customer-specified, TI products are standard, catalog, general purpose devices.

TI objects to and rejects any additional or different terms you may propose.

Copyright © 2026, Texas Instruments Incorporated

Last updated 10/2025