3-V to 5.5-V Single-Channel RS-232 Compatible Line Driver and Receiver

1 Features

- Operate with 3-V to 5.5-V V_{CC} supply
- Operate up to 1 Mbit/s
- Low standby current : 1 µA typical
- External capacitors : 4 x 0.1 µF
- Accepts 5-V logic input with 3.3-V supply
- RS-232 bus-pin ESD protection exceeds ±15 kV using human-body model (HBM)
- Auto-powerdown feature automatically disables drivers for power savings

2 Applications

- Industrial PCs
- Wired networking
- Data center and enterprise computing
- Battery-powered systems
- PDAs
- Notebooks
- Laptops
- Palmtop PCs
- Hand-held equipment

3 Description

The SN65C3221 and SN75C3221 consist of one line driver, one line receiver, and a dual charge-pump circuit with ±15-kV ESD protection pin to pin (serial-port connection pins, including GND). These devices providethe electrical interface between an asynchronous communication controller and the serial-port connector. The charge pump and four small external capacitors allow operation from a single 3-V to 5.5-V supply. These devices operate at data signaling rates up to 1 Mbit/s and a driver output slew rate of 24 V/µs to 150 V/µs.

Flexible control options for power management are available when the serial port is inactive. The auto-powerdown feature functions when FORCEON is low and $\overline{\text{FORCEOFF}}$ is high. During this mode of operation, if the devices do not sense a valid RS-232 signal on the receiver input, the driver output is disabled. If $\overline{\text{FORCEOFF}}$ is set low and $\overline{\text{EN}}$ is high, both the driver and receiver are shut off, and the supply current is reduced to 1 µA. Disconnecting the serial port or turning off the peripheral drivers causes the auto-powerdown condition to occur. Auto-powerdown can be disabled when FORCEON and $\overline{\text{FORCEOFF}}$ are high. With auto-powerdown enabled, the device is activated automatically when a valid signal is applied to the receiver input. The $\overline{\text{INVALID}}$ output notifies the user if an RS-232 signal is present at the receiver input. $\overline{\text{INVALID}}$ is high (valid data) if the receiver input voltage is greater than 2.7 V or less than −2.7 V, or has been between −0.3 V and 0.3 V for less than 30 µs. $\overline{\text{INVALID}}$ is low (invalid data) if the receiver input voltage is between −0.3 V and 0.3 V for more than 30 µs. Refer to Figure 7-5 for receiver input levels.

Device Information

PART NUMBER	PACKAGE(1)	BODY SIZE (NOM)
SNx5C3221	SSOP (DB) 16	6.20 mm x 5.30 mm
	TSSOP (PW) 16	10.3 mm x 7.50 mm

(1) For all available packages, see the orderable addendum at the end of the data sheet.

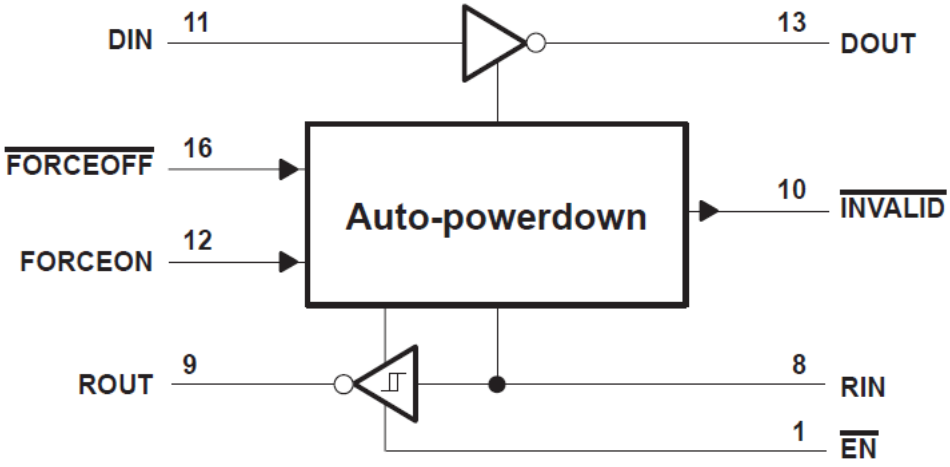

Logic Diagram (Positive Logic)

An IMPORTANT NOTICE at the end of this data sheet addresses availability, warranty, changes, use in safety-critical applications, intellectual property matters and other important disclaimers. PRODUCTION DATA.

Table of Contents

1 Features....1
2 Applications....1
3 Description....1
4 Revision History....2
5 Pin Configuration and Functions....3
6 Specifications....4
6.1 Absolute Maximum Ratings....4
6.2 ESD Ratings....4
6.3 Recommended Operating Conditions[(1)]....4
6.4 Electrical Characteristics....5
6.5 Electrical Characteristics - Driver....6
6.6 Switching Characteristics - Driver....6
6.7 Electrical Characteristics - Receiver....6
6.8 Switching Characteristics - Receiver....7
6.9 Electrical Characteristics - Auto-Powerdown....7
6.10 Switching Characteristics - Auto-Powerdown....7
7 Parameter Measurement Information....8
8 Detailed Description....11
8.1 Device Functional Modes....11
9 Application and Implementation....12
9.1 Application Information....12
10 Device and Documentation Support....13
10.1 Receiving Notification of Documentation Updates....13
10.2 Support Resources....13
10.3 Trademarks....13
10.4 Electrostatic Discharge Caution....13
10.5 Glossary....13
11 Mechanical, Packaging, and Orderable Information....13

4 Revision History

NOTE: Page numbers for previous revisions may differ from page numbers in the current version.

Changes from Revision E (October 2004) to Revision F (July 2021)	Page
• Changed the *Applications* list	1
• Deleted the Oderaing Information table	1
• Added the *Device Information* table	1
• Removed the thermal parameters from *Absolute Maximum Ratings* table and moved them to *Thermal Information* table	4
• Added *ESD Ratings* table. Moved the driver and receiver ESD specifications to this table	4
• Changed the thermal parameters for PW package of SN65C3221 and DB package of SN75C3221. Added additional thermal parameters for both the packages in the *Thermal Information* table	5
• Added the *Detailed Description* section	11

Copyright © 2021 Texas Instruments Incorporated

5 Pin Configuration and Functions

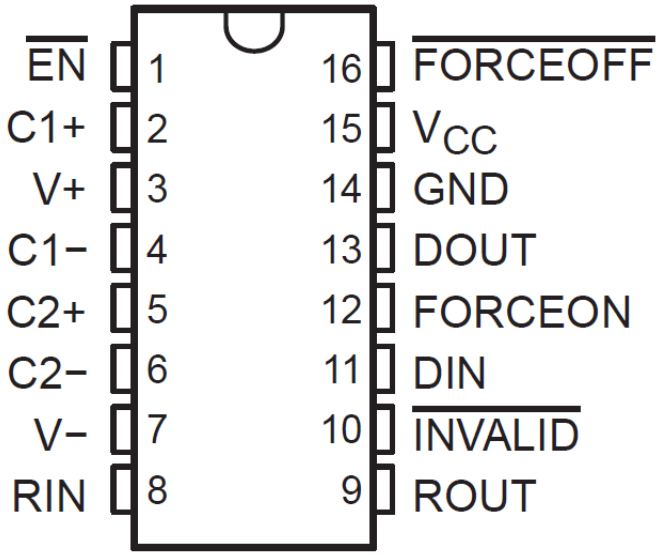

Figure 5-1. DB or PW Package
Top View

Table 5-1. Pin Functions

PIN			DESCRIPTION
NAME	NO.	I/O	
C1+	2	—	Positive terminals of the voltage-doubler charge-pump capacitors
C2+	5		
C1–	4	—	Negative terminals of the voltage-doubler charge-pump capacitors
C2–	6		
DIN	11	I	Driver input
DOUT	13	O	RS-232 driver output
$\overline{\text{EN}}$	1	I	Low input enables receiver ROUT output. High input sets ROUT to high impedance.
$\overline{\text{FORCEOFF}}$	16	I	Automatic power-down control input
FORCEON	12	I	Automatic power-down control input
GND	14	—	Ground
$\overline{\text{INVALID}}$	10	O	Invalid output pin. Output low when all RIN inputs are unpowered.
RIN	8	I	RS-232 receiver input
ROUT	9	O	Receiver output
V_{CC}	15	—	3-V to 5.5-V supply voltage
V+	3	O	5.5-V supply generated by the charge pump
V–	7	O	–5.5-V supply generated by the charge pump

Copyright © 2021 Texas Instruments Incorporated

6 Specifications

6.1 Absolute Maximum Ratings

over operating free-air temperature range (unless otherwise noted)[(1)]

			MIN	MAX	UNIT
V_{CC}	Supply voltage range		–0.3	6	V
V+	Positive output supply voltage range[(2)]		–0.3	7	V
V–	Negative output supply voltage range[(2)]		–7	0.3	V
V+ – V –	Supply voltage difference[(2)]			13	V
V_I	Input voltage range	Driver ($\overline{\text{FORCEOFF}}$, FORCEON, $\overline{\text{EN}}$)	–0.3	6	V
		Receiver	–25	25	
V_O	Output voltage range	Driver	–13.2	13.2	V
		Receiver ($\overline{\text{INVALID}}$)	–0.3	V_{CC} + 0.3	
T_J	Operating virtual junction temperature			150	℃
T_{stg}	Storage temperature		–65	150	°C

(1) Stresses beyond those listed under *absolute maximum ratings* may cause permanent damage to the device. These are stress ratings only and functional operation of the device at these or any other conditions beyond those indicated under Section 6.3 is not implied. Exposure to absolute-maximum-rated conditions for extended periods may affect device reliability.
(2) All voltage values are with respect to network ground terminal GND.

6.2 ESD Ratings

			VALUE	UNIT
$V_{(ESD)}$ Electrostatic discharge	Human-body model (HBM), per ANSI/ESDA/JEDEC JS-001[1]	RIN and DOUT Pins	±15000	V
		All other pins	±3000	
	Charged-device model (CDM), per JEDEC specification JESD22-C101[2]	All pins	±1500	

6.3 Recommended Operating Conditions[(1)]

(see Figure 9-1)

				MIN	NOM	MAX	UNIT
	Supply voltage		V_{CC} = 3.3 V	3	3.3	3.6	V
			V_{CC} = 5 V	4.5	5	5.5	
V_{IH}	Driver and control high-level input voltage	DIN, $\overline{\text{FORCEOFF}}$, FORCEON, $\overline{\text{EN}}$	V_{CC} = 3.3 V	2			V
			V_{CC} = 5 V	2.4			
V_{IL}	Driver and control low-level input voltage	DIN, $\overline{\text{FORCEOFF}}$, FORCEON, $\overline{\text{EN}}$				0.8	V
V_I	Driver and control input voltage	DIN, $\overline{\text{FORCEOFF}}$, FORCEON		0		5.5	V
V_I	Receiver input voltage			−25		25	V
T_A	Operating free-air temperature		SN65C3221	−40		85	°C
			SN75C3221	0		70	

(1) Test conditions are C1−C4 = 0.1 µF at V_{CC} = 3.3 V ± 0.3 V; C1 = 0.047 µF, C2−C4 = 0.33 µF at V_{CC} = 5 V ± 0.5 V.

Copyright © 2021 Texas Instruments Incorporated

6.3.1 Thermal Information

THERMAL METRIC[1]		SN65C3221		SN75C3221		UNIT
		DB (SSOP)	PW (TSSOP)	DB (SSOP)	PW (TSSOP)	
		16 PINS	16 PINS	16 PINS	16 PINS	
$R_{\theta JA}$	Junction-to-ambient thermal resistance	82.0	110.9	105.8	108.0	°C/W
$R_{\theta JC(top)}$	Junction-to-case (top) thermal resistance	45.7	41.7	51.9	41.1	°C/W
$R_{\theta JB}$	Junction-to-board thermal resistance	44.4	57.2	57.6	51.4	°C/W
ψ_{JT}	Junction-to-top characterization parameter	11.0	4.2	14.1	3.9	°C/W
ψ_{JB}	Junction-to-board characterization parameter	43.8	56.6	56.8	50.9	°C/W

6.4 Electrical Characteristics

over recommended operating free-air temperature ranges of supply voltage and operating free-air temperature (unless otherwise noted)[(2)] (see Figure 9-1)

PARAMETER			TEST CONDITIONS	MIN	TYP[(1)]	MAX	UNIT
I_I	Input leakage current	$\overline{FORCEOFF}$, FORCEON, $\overline{EN}$			±0.01	±1	µA
I_{CC}	Supply current (T_A = 25°C)	Auto-powerdown disabled	No load, $\overline{FORCEOFF}$ and FORCEON at V_{CC}		0.3	1	mA
		Powered off	No load, $\overline{FORCEOFF}$ at GND		1	10	µA
		Auto-powerdown enabled	No load, $\overline{FORCEOFF}$ at V_{CC}, FORCEON at GND, All RIN are open or grounded		1	10	µA

(1) All typical values are at V_{CC} = 3.3 V or V_{CC} = 5 V, and T_A = 25°C.
(2) Test conditions are C1−C4 = 0.1 µF at V_{CC} = 3.3 V ± 0.3 V; C1 = 0.047 µF, C2−C4 = 0.33 µF at V_{CC} = 5 V ± 0.5 V.

Copyright © 2021 Texas Instruments Incorporated

6.5 Electrical Characteristics - Driver

over recommended ranges of supply voltage and operating free-air temperature range (unless otherwise noted)[3] (see Figure 9-1)

PARAMETER		TEST CONDITIONS			MIN	TYP[1]	MAX	UNIT
V_{OH}	High-level output voltage	DOUT at R_L = 3 kΩ to GND,	DIN = GND		5	5.4		V
V_{OL}	Low-level output voltage	DOUT at R_L = 3 kΩ to GND,	DIN = V_{CC}		−5	−5.4		V
I_{IH}	High-level input current	$V_I = V_{CC}$				±0.01	±1	μA
I_{IL}	Low-level input current	V_I at GND				±0.01	±1	μA
I_{OS}	Short-circuit output current[2]	V_{CC} = 3.6 V,	V_O = 0 V			±35	±60	mA
		V_{CC} = 5.5 V,	V_O = 0 V			±35	±90	
r_o	Output resistance	V_{CC}, V+, and V− = 0 V,	V_O = ±2 V		300	10M		Ω
I_{off}	Output leakage current	$\overline{\text{FORCEOFF}}$ = GND	V_O = ±12 V,	V_{CC} = 3 V to 3.6 V			±25	μA
			V_O = ±10 V,	V_{CC} = 4.5 V to 5.5 V			±25	

(1) All typical values are at V_{CC} = 3.3 V or V_{CC} = 5 V, and T_A = 25°C.
(2) Short-circuit durations should be controlled to prevent exceeding the device absolute power-dissipation ratings, and not more than one output should be shorted at a time.
(3) Test conditions are C1−C4 = 0.1 μF at V_{CC} = 3.3 V ± 0.3 V; C1 = 0.047 μF, C2−C4 = 0.33 μF at V_{CC} = 5 V ± 0.5 V.

6.6 Switching Characteristics - Driver

over recommended ranges of supply voltage and operating free-air temperature (unless otherwise noted)[3] (see Figure 9-1)

PARAMETER		TEST CONDITIONS			MIN	TYP[1]	MAX	UNIT
Maximum data rate (see Figure 7-1)		R_L = 3 kΩ	C_L = 1000 pF		250			kbit/s
			C_L = 250 pF,	V_{CC} = 3 V to 4.5 V	1000			
			C_L = 1000 pF,	V_{CC} = 4.5 V to 5.5 V	1000			
$t_{sk(p)}$	Pulse skew[2]	C_L = 150 pF to 2500 pF	R_L = 3 kΩ to 7 kΩ,	See Figure 7-2		100		ns
SR(tr)	Slew rate, transition region (see Figure 7-1)	V_{CC} = 3.3 V, R_L = 3 kΩ to 7 kΩ	C_L = 150 pF to 1000 pF		18		150	V/μs

(1) All typical values are at V_{CC} = 3.3 V or V_{CC} = 5 V, and T_A = 25°C.
(2) Pulse skew is defined as $|t_{PLH} - t_{PHL}|$ of each channel of the same device.
(3) Test conditions are C1−C4 = 0.1 μF at V_{CC} = 3.3 V ± 0.3 V; C1 = 0.047 μF, C2−C4 = 0.33 μF at V_{CC} = 5 V ± 0.5 V.

6.7 Electrical Characteristics - Receiver

over recommended ranges of supply voltage and operating free-air temperature (unless otherwise noted)[2] (see Figure 9-1)

PARAMETER		TEST CONDITIONS	MIN	TYP[1]	MAX	UNIT
V_{OH}	High-level output voltage	I_{OH} = −1 mA	V_{CC} − 0.6 V	V_{CC} − 0.1 V		V
V_{OL}	Low-level output voltage	I_{OL} = 1.6 mA			0.4	V
V_{IT+}	Positive-going input threshold voltage	V_{CC} = 3.3 V		1.6	2.4	V
		V_{CC} = 5 V		1.9	2.4	
V_{IT-}	Negative-going input threshold voltage	V_{CC} = 3.3 V	0.6	1.1		V
		V_{CC} = 5 V	0.8	1.4		
V_{hys}	Input hysteresis (V_{IT+}− V_{IT-})			0.5		V
I_{off}	Output leakage current	$\overline{\text{FORCEOFF}}$ = 0 V		±0.05	±10	μA
r_i	Input resistance	V_I = ±3 V to ±25 V	3	5	7	kΩ

(1) All typical values are at V_{CC} = 3.3 V or V_{CC} = 5 V, and T_A = 25°C.
(2) Test conditions are C1−C4 = 0.1 μF at V_{CC} = 3.3 V ± 0.3 V; C1 = 0.047 μF, C2−C4 = 0.33 μF at V_{CC} = 5 V ± 0.5 V.

Copyright © 2021 Texas Instruments Incorporated

6.8 Switching Characteristics - Receiver

over recommended ranges of supply voltage and operating free-air temperature range (unless otherwise noted)[3]

PARAMETER		TEST CONDITIONS			MIN	TYP[1]	MAX	UNIT
t_{PLH}	Propagation delay time, low- to high-level output	C_L = 150 pF,	See Figure 7-3			150		ns
t_{PHL}	Propagation delay time, high- to low-level output	C_L = 150 pF,	See Figure 7-3			150		ns
t_{en}	Output enable time	C_L = 150 pF,	R_L = 3 kΩ,	See Figure 7-4		200		ns
t_{dis}	Output disable time	C_L = 150 pF,	R_L = 3 kΩ,	See Figure 7-4		200		ns
$t_{sk(p)}$	Pulse skew[2]	See Figure 7-3				50		ns

(1) All typical values are at V_{CC} = 3.3 V or V_{CC} = 5 V, and T_A = 25°C.
(2) Pulse skew is defined as $|t_{PLH} - t_{PHL}|$ of each channel of the same device.
(3) Test conditions are C1−C4 = 0.1 µF at V_{CC} = 3.3 V ± 0.3 V; C1 = 0.047 µF, C2−C4 = 0.33 µF at V_{CC} = 5 V ± 0.5 V.

6.9 Electrical Characteristics - Auto-Powerdown

over recommended ranges of supply voltage and operating free-air temperature range (unless otherwise noted) (see Figure 7-5)

PARAMETER		TEST CONDITIONS		MIN	MAX	UNIT
$V_{T+(valid)}$	Receiver input threshold for $\overline{INVALID}$ high-level output voltage	FORCEON = GND,	$\overline{FORCEOFF}$ = V_{CC}		2.7	V
$V_{T-(valid)}$	Receiver input threshold for $\overline{INVALID}$ high-level output voltage	FORCEON = GND,	$\overline{FORCEOFF}$ = V_{CC}	−2.7		V
$V_{T(invalid)}$	Receiver input threshold for $\overline{INVALID}$ low-level output voltage	FORCEON = GND,	$\overline{FORCEOFF}$ = V_{CC}	−0.3	0.3	V
V_{OH}	$\overline{INVALID}$ high-level output voltage	I_{OH} = −1 mA, FORCEON = GND, $\overline{FORCEOFF}$ = V_{CC}		V_{CC}−0.6		V
V_{OL}	$\overline{INVALID}$ low-level output voltage	I_{OL}= 1.6 mA, FORCEON = GND, $\overline{FORCEOFF}$ = V_{CC}			0.4	V

6.10 Switching Characteristics - Auto-Powerdown

over operating free-air temperature range (unless otherwise noted) (see Figure 7-5)

PARAMETER		MIN	TYP[1]	MAX	UNIT
t_{valid}	Propagation delay time, low- to high-level output		1		µs
$t_{invalid}$	Propagation delay time, high- to low-level output		30		µs
t_{en}	Supply enable time		100		µs

(1) All typical values are at V_{CC} = 3.3 V or V_{CC} = 5 V, and T_A = 25°C.

Copyright © 2021 Texas Instruments Incorporated

7 Parameter Measurement Information

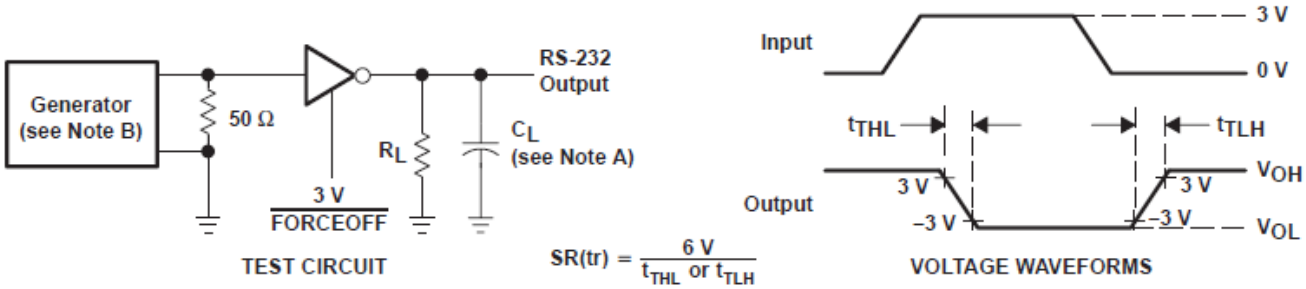

NOTES: A. C_L includes probe and jig capacitance.
B. The pulse generator has the following characteristics: PRR = 250 kbit/s, Z_O = 50 Ω, 50% duty cycle, $t_r \leq 10$ ns, $t_f \leq 10$ ns.

Figure 7-1. Driver Slew Rate

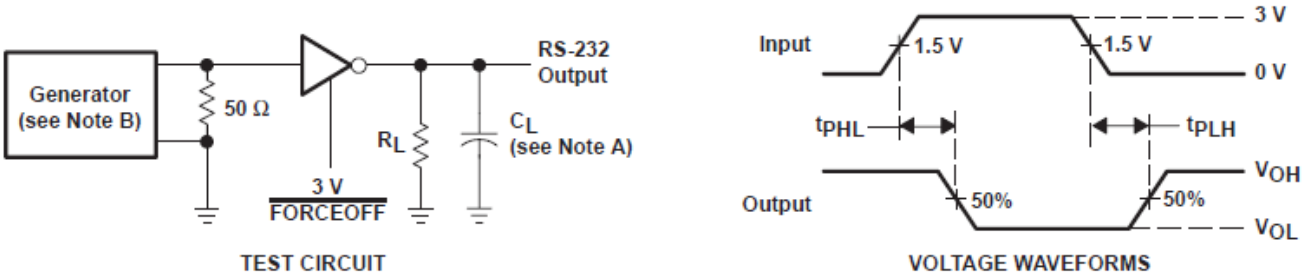

NOTES: A. C_L includes probe and jig capacitance.
B. The pulse generator has the following characteristics: PRR = 250 kbit/s, Z_O = 50 Ω, 50% duty cycle, $t_r \leq 10$ ns, $t_f \leq 10$ ns.

Figure 7-2. Driver Pulse Skew

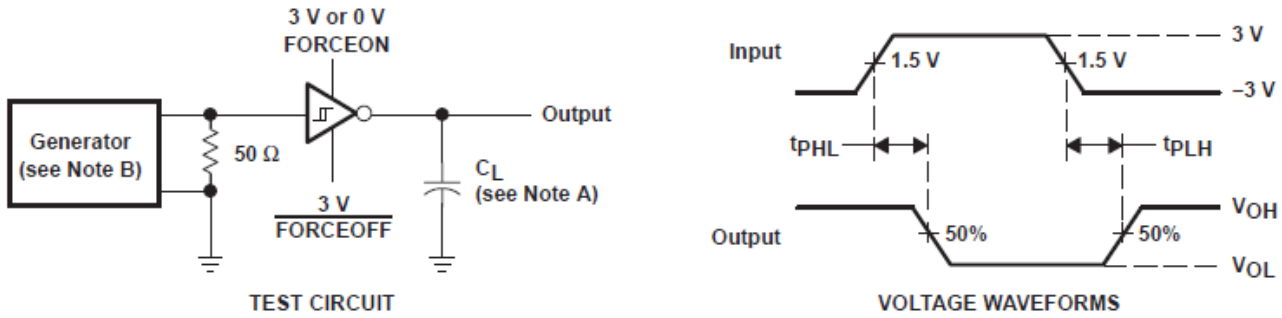

NOTES: A. C_L includes probe and jig capacitance.
B. The pulse generator has the following characteristics: Z_O = 50 Ω, 50% duty cycle, $t_r \leq 10$ ns, $t_f \leq 10$ ns.

Figure 7-3. Receiver Propagation Delay Times

Copyright © 2021 Texas Instruments Incorporated

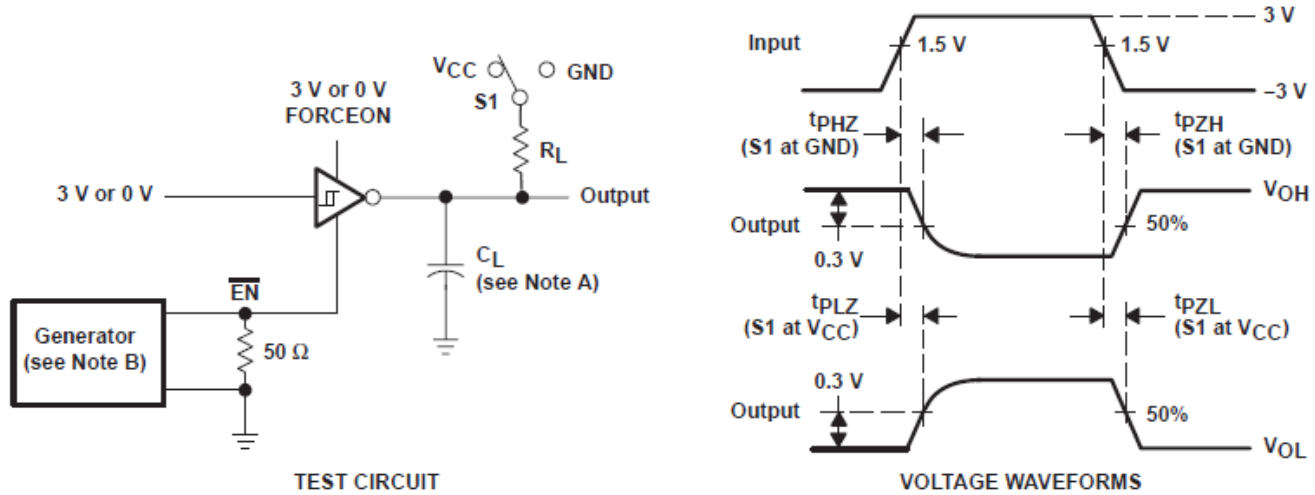

NOTES: A. C_L includes probe and jig capacitance.
B. The pulse generator has the following characteristics: Z_O = 50 Ω, 50% duty cycle, $t_r \leq 10$ ns, $t_f \leq 10$ ns.
C. t_{PLZ} and t_{PHZ} are the same as t_{dis}.
D. t_{PZL} and t_{PZH} are the same as t_{en}.

Figure 7-4. Receiver Enable and Disable Times

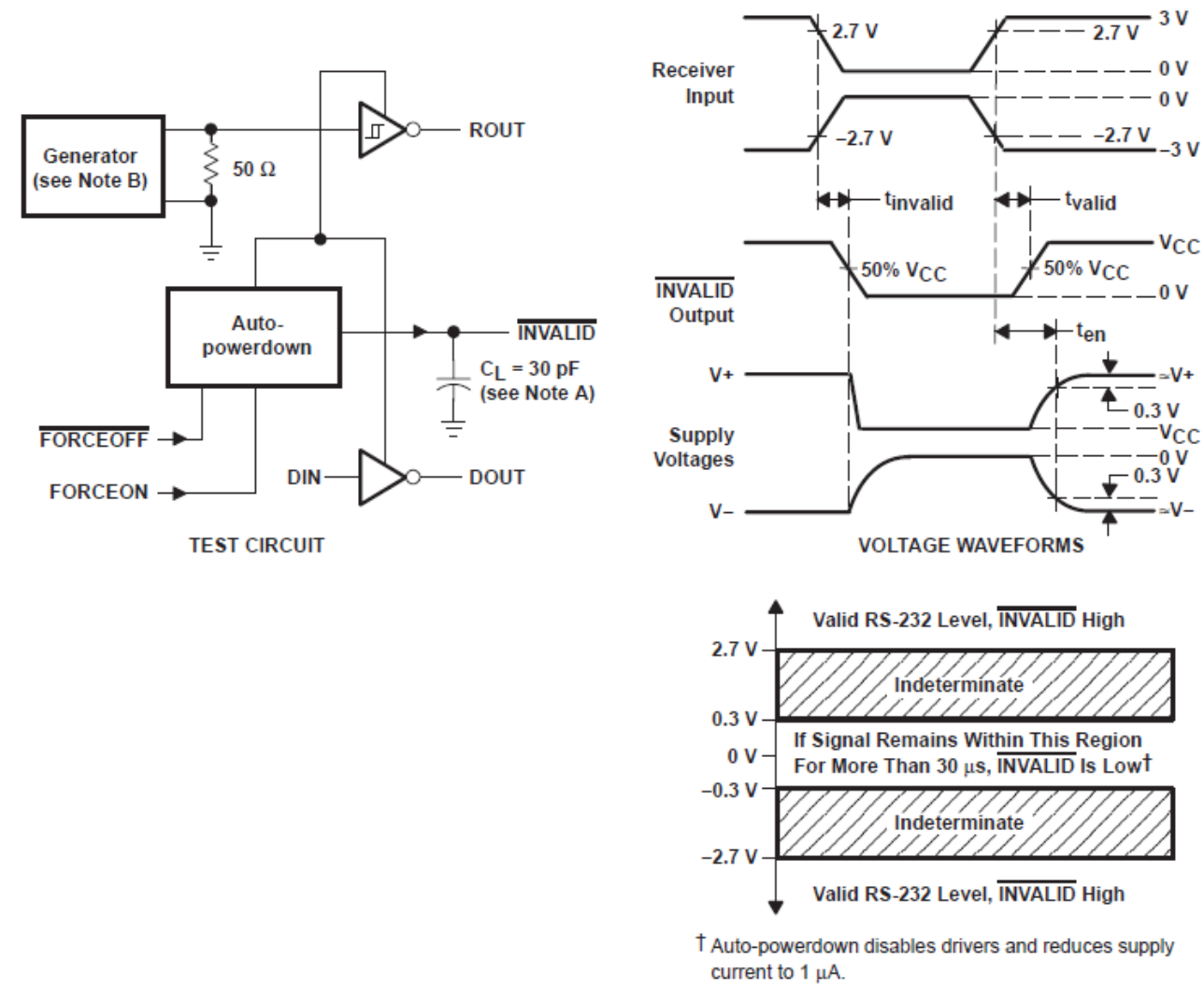

† Auto-powerdown disables drivers and reduces supply current to 1 µA.

NOTES: A. C_L includes probe and jig capacitance.
B. The pulse generator has the following characteristics: PRR = 5 kbit/s, Z_O = 50 Ω, 50% duty cycle, $t_r \leq 10$ ns, $t_f \leq 10$ ns.

Figure 7-5. $\overline{\text{INVALID}}$ Propagation Delay Times and Driver Enabling Time

Copyright © 2021 Texas Instruments Incorporated

8 Detailed Description

8.1 Device Functional Modes

Table 8-1. Each Driver[(1)]

INPUTS				OUTPUT DOUT	DRIVER STATUS
DIN	FORCEON	$\overline{\text{FORCEOFF}}$	VALID RIN RS-232 LEVEL		
X	X	L	X	Z	Powered off
L	H	H	X	H	Normal operation with auto-powerdown disabled
H	H	H	X	L	
L	L	H	Yes	H	Normal operation with auto-powerdown enabled
H	L	H	Yes	L	
L	L	H	No	Z	Powered off by auto-powerdown feature
H	L	H	No	Z	

(1) H = high level, L = low level, X = irrelevant, Z = high impedance

Table 8-2. Each Receiver[(1)]

INPUTS			OUTPUT ROUT
RIN	$\overline{\text{EN}}$	VALID RIN RS-232 LEVEL	
L	L	X	H
H	L	X	L
X	H	X	Z
Open	L	No	H

(1) H = high level, L = low level, X = irrelevant, Z = high impedance (off), Open = disconnected input or connected driver off.

9 Application and Implementation

Note

Information in the following applications sections is not part of the TI component specification, and TI does not warrant its accuracy or completeness. TI's customers are responsible for determining suitability of components for their purposes, as well as validating and testing their design implementation to confirm system functionality.

9.1 Application Information

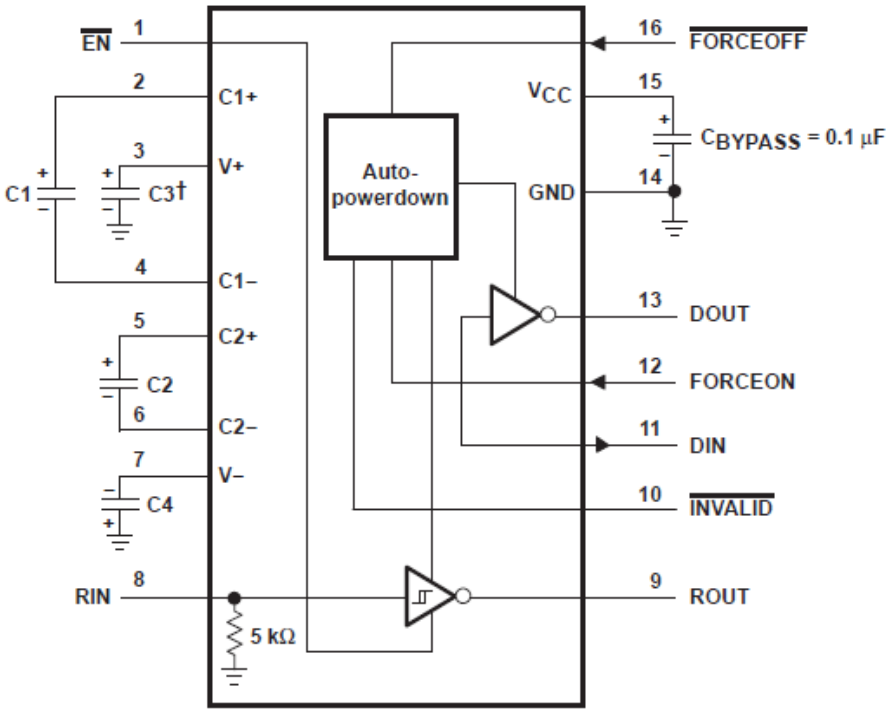

† C3 can be connected to V_{CC} or GND

Resistor values shown are nominal.

Figure 9-1. Typical Operating Circuit and Capacitor Values

Table 9-1. V_{CC} vs Capacitator Values

V_{CC}	C1	C2, C3, and C4
3.3 V ± 0.3 V	0.1 µF	0.1 µF
5 V ± 0.5 V	0.047 µF	0.33 µF
3 V to 5.5 V	0.1 µF	0.47 µF

Copyright © 2021 Texas Instruments Incorporated

10 Device and Documentation Support

TI offers an extensive line of development tools. Tools and software to evaluate the performance of the device, generate code, and develop solutions are listed below.

10.1 Receiving Notification of Documentation Updates

To receive notification of documentation updates, navigate to the device product folder on ti.com. Click on *Subscribe to updates* to register and receive a weekly digest of any product information that has changed. For change details, review the revision history included in any revised document.

10.2 Support Resources

TI E2E™ support forums are an engineer's go-to source for fast, verified answers and design help — straight from the experts. Search existing answers or ask your own question to get the quick design help you need.

Linked content is provided "AS IS" by the respective contributors. They do not constitute TI specifications and do not necessarily reflect TI's views; see TI's Terms of Use.

10.3 Trademarks

TI E2E™ is a trademark of Texas Instruments.
All trademarks are the property of their respective owners.

10.4 Electrostatic Discharge Caution

This integrated circuit can be damaged by ESD. Texas Instruments recommends that all integrated circuits be handled with appropriate precautions. Failure to observe proper handling and installation procedures can cause damage.

ESD damage can range from subtle performance degradation to complete device failure. Precision integrated circuits may be more susceptible to damage because very small parametric changes could cause the device not to meet its published specifications.

10.5 Glossary

TI Glossary	This glossary lists and explains terms, acronyms, and definitions.

11 Mechanical, Packaging, and Orderable Information

The following pages include mechanical, packaging, and orderable information. This information is the most current data available for the designated devices. This data is subject to change without notice and revision of this document. For browser-based versions of this data sheet, refer to the left-hand navigation.

PACKAGING INFORMATION

Orderable part number	Status (1)	Material type (2)	Package | Pins	Package qty | Carrier	RoHS (3)	Lead finish/ Ball material (4)	MSL rating/ Peak reflow (5)	Op temp (°C)	Part marking (6)
SN65C3221DB	Obsolete	Production	SSOP (DB) | 16	-	-	Call TI	Call TI	-40 to 85	CB3221
SN65C3221DBR	Obsolete	Production	SSOP (DB) | 16	-	-	Call TI	Call TI	-40 to 85	CB3221
SN65C3221PWR	Active	Production	TSSOP (PW) | 16	2000 | LARGE T&R	Yes	NIPDAU | SN	Level-1-260C-UNLIM	-40 to 85	CB3221
SN65C3221PWR.A	Active	Production	TSSOP (PW) | 16	2000 | LARGE T&R	Yes	NIPDAU	Level-1-260C-UNLIM	-40 to 85	CB3221
SN65C3221PWRG4	Active	Production	TSSOP (PW) | 16	2000 | LARGE T&R	Yes	NIPDAU	Level-1-260C-UNLIM	-40 to 85	CB3221
SN75C3221DBR	Active	Production	SSOP (DB) | 16	2000 | LARGE T&R	Yes	NIPDAU	Level-1-260C-UNLIM	0 to 70	CA3221
SN75C3221DBR.A	Active	Production	SSOP (DB) | 16	2000 | LARGE T&R	Yes	NIPDAU	Level-1-260C-UNLIM	0 to 70	CA3221
SN75C3221DW	Preview	Production	SOIC (DW) | 16	40 | TUBE	-	Call TI	Call TI	0 to 70	
SN75C3221PWR	Active	Production	TSSOP (PW) | 16	2000 | LARGE T&R	Yes	NIPDAU	Level-1-260C-UNLIM	0 to 70	CA3221
SN75C3221PWR.A	Active	Production	TSSOP (PW) | 16	2000 | LARGE T&R	Yes	NIPDAU	Level-1-260C-UNLIM	0 to 70	CA3221

(1) **Status:** For more details on status, see our product life cycle.

(2) **Material type:** When designated, preproduction parts are prototypes/experimental devices, and are not yet approved or released for full production. Testing and final process, including without limitation quality assurance, reliability performance testing, and/or process qualification, may not yet be complete, and this item is subject to further changes or possible discontinuation. If available for ordering, purchases will be subject to an additional waiver at checkout, and are intended for early internal evaluation purposes only. These items are sold without warranties of any kind.

(3) **RoHS values:** Yes, No, RoHS Exempt. See the TI RoHS Statement for additional information and value definition.

(4) **Lead finish/Ball material:** Parts may have multiple material finish options. Finish options are separated by a vertical ruled line. Lead finish/Ball material values may wrap to two lines if the finish value exceeds the maximum column width.

(5) **MSL rating/Peak reflow:** The moisture sensitivity level ratings and peak solder (reflow) temperatures. In the event that a part has multiple moisture sensitivity ratings, only the lowest level per JEDEC standards is shown. Refer to the shipping label for the actual reflow temperature that will be used to mount the part to the printed circuit board.

(6) **Part marking:** There may be an additional marking, which relates to the logo, the lot trace code information, or the environmental category of the part.

Multiple part markings will be inside parentheses. Only one part marking contained in parentheses and separated by a "~" will appear on a part. If a line is indented then it is a continuation of the previous line and the two combined represent the entire part marking for that device.

Important Information and Disclaimer: The information provided on this page represents TI's knowledge and belief as of the date that it is provided. TI bases its knowledge and belief on information provided by third parties, and makes no representation or warranty as to the accuracy of such information. Efforts are underway to better integrate information from third parties. TI has taken and continues to take reasonable steps to provide representative

and accurate information but may not have conducted destructive testing or chemical analysis on incoming materials and chemicals. TI and TI suppliers consider certain information to be proprietary, and thus CAS numbers and other limited information may not be available for release.

In no event shall TI's liability arising out of such information exceed the total purchase price of the TI part(s) at issue in this document sold by TI to Customer on an annual basis.

OTHER QUALIFIED VERSIONS OF SN65C3221 :

- Automotive : SN65C3221-Q1

NOTE: Qualified Version Definitions:

- Automotive - Q100 devices qualified for high-reliability automotive applications targeting zero defects

TAPE AND REEL INFORMATION

REEL DIMENSIONS

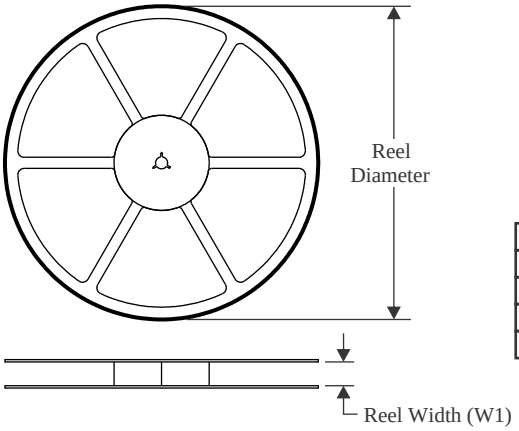

TAPE DIMENSIONS

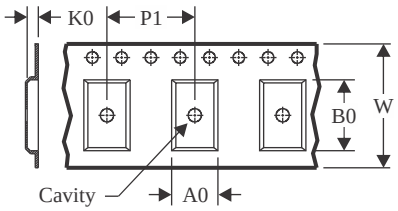

A0	Dimension designed to accommodate the component width
B0	Dimension designed to accommodate the component length
K0	Dimension designed to accommodate the component thickness
W	Overall width of the carrier tape
P1	Pitch between successive cavity centers

QUADRANT ASSIGNMENTS FOR PIN 1 ORIENTATION IN TAPE

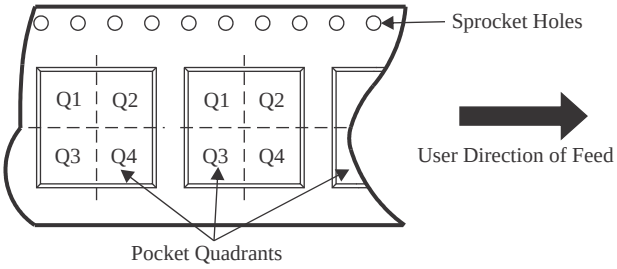

*All dimensions are nominal

Device	Package Type	Package Drawing	Pins	SPQ	Reel Diameter (mm)	Reel Width W1 (mm)	A0 (mm)	B0 (mm)	K0 (mm)	P1 (mm)	W (mm)	Pin1 Quadrant
SN65C3221PWR	TSSOP	PW	16	2000	330.0	12.4	6.9	5.6	1.6	8.0	12.0	Q1
SN65C3221PWR	TSSOP	PW	16	2000	330.0	12.4	6.9	5.6	1.6	8.0	12.0	Q1
SN65C3221PWRG4	TSSOP	PW	16	2000	330.0	12.4	6.9	5.6	1.6	8.0	12.0	Q1
SN65C3221PWRG4	TSSOP	PW	16	2000	330.0	12.4	6.9	5.6	1.6	8.0	12.0	Q1
SN75C3221DBR	SSOP	DB	16	2000	330.0	16.4	8.35	6.6	2.4	12.0	16.0	Q1
SN75C3221PWR	TSSOP	PW	16	2000	330.0	12.4	6.9	5.6	1.6	8.0	12.0	Q1

TAPE AND REEL BOX DIMENSIONS

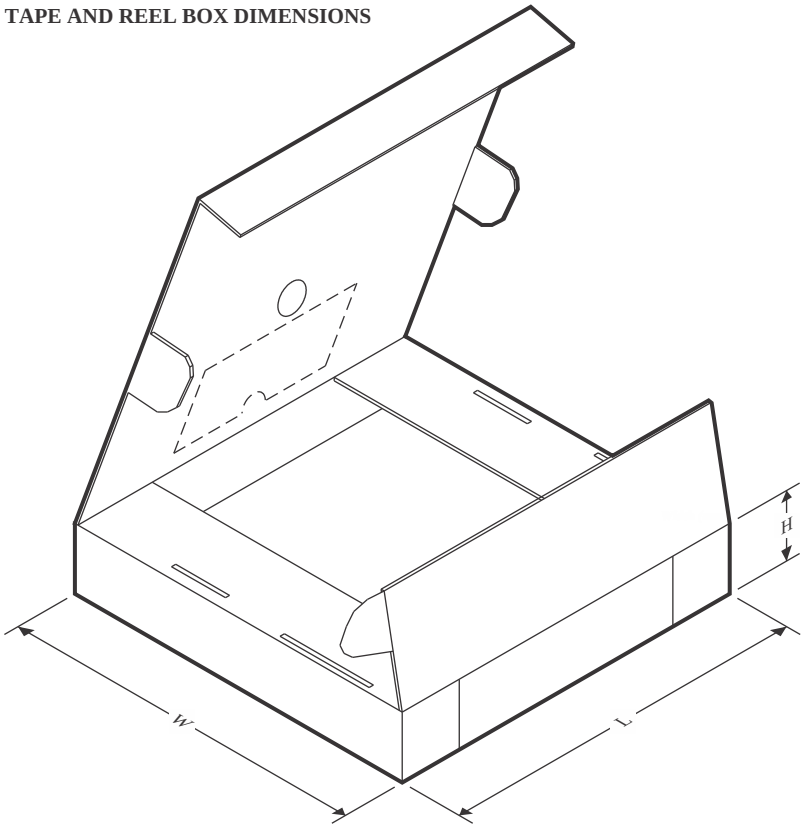

*All dimensions are nominal

Device	Package Type	Package Drawing	Pins	SPQ	Length (mm)	Width (mm)	Height (mm)
SN65C3221PWR	TSSOP	PW	16	2000	356.0	356.0	35.0
SN65C3221PWR	TSSOP	PW	16	2000	353.0	353.0	32.0
SN65C3221PWRG4	TSSOP	PW	16	2000	356.0	356.0	35.0
SN65C3221PWRG4	TSSOP	PW	16	2000	356.0	356.0	35.0
SN75C3221DBR	SSOP	DB	16	2000	353.0	353.0	32.0
SN75C3221PWR	TSSOP	PW	16	2000	353.0	353.0	32.0

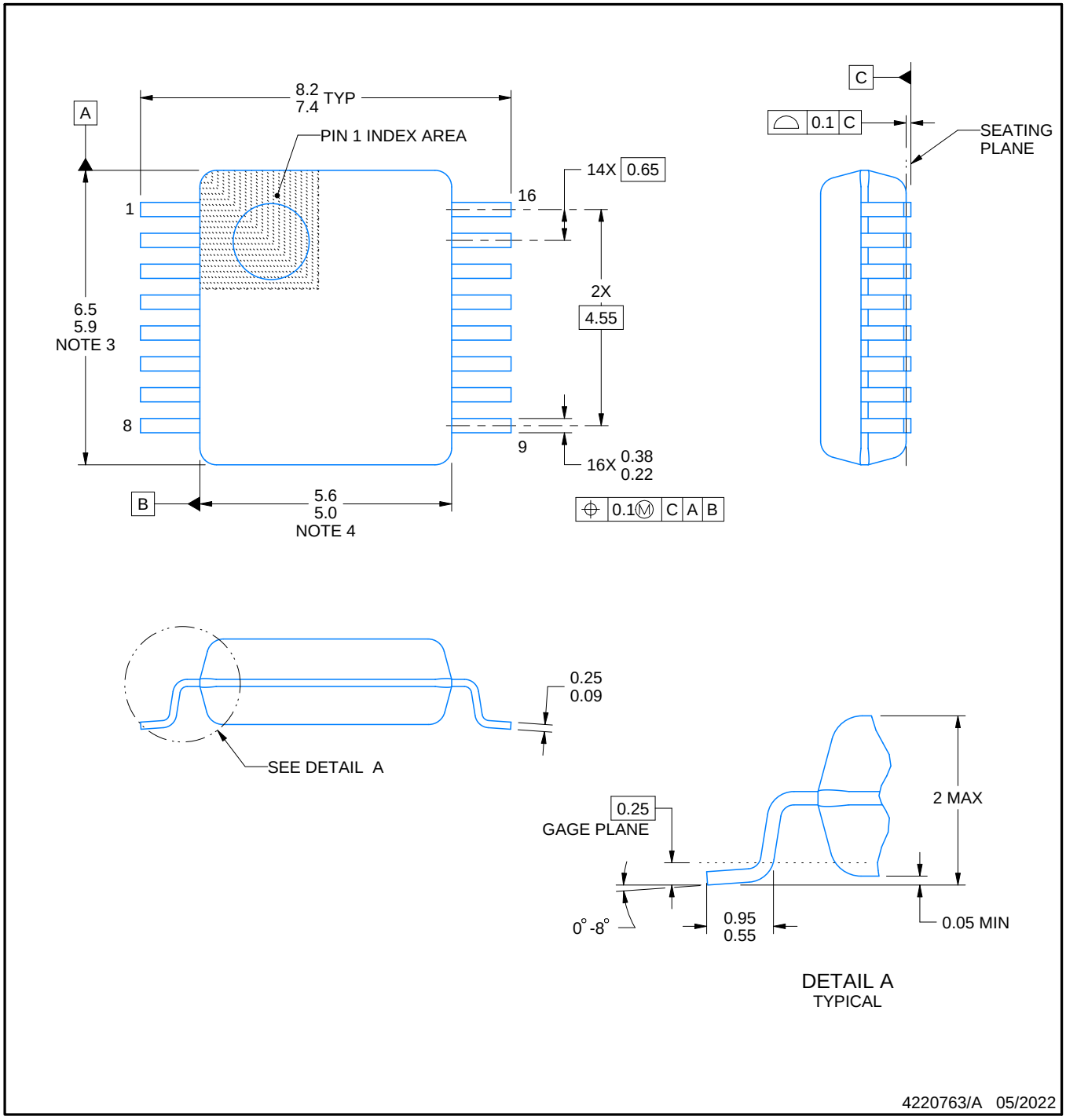

NOTES:

1. All linear dimensions are in millimeters. Any dimensions in parenthesis are for reference only. Dimensioning and tolerancing per ASME Y14.5M.
2. This drawing is subject to change without notice.
3. This dimension does not include mold flash, protrusions, or gate burrs. Mold flash, protrusions, or gate burrs shall not exceed 0.15 mm per side.
4. Reference JEDEC registration MO-150.

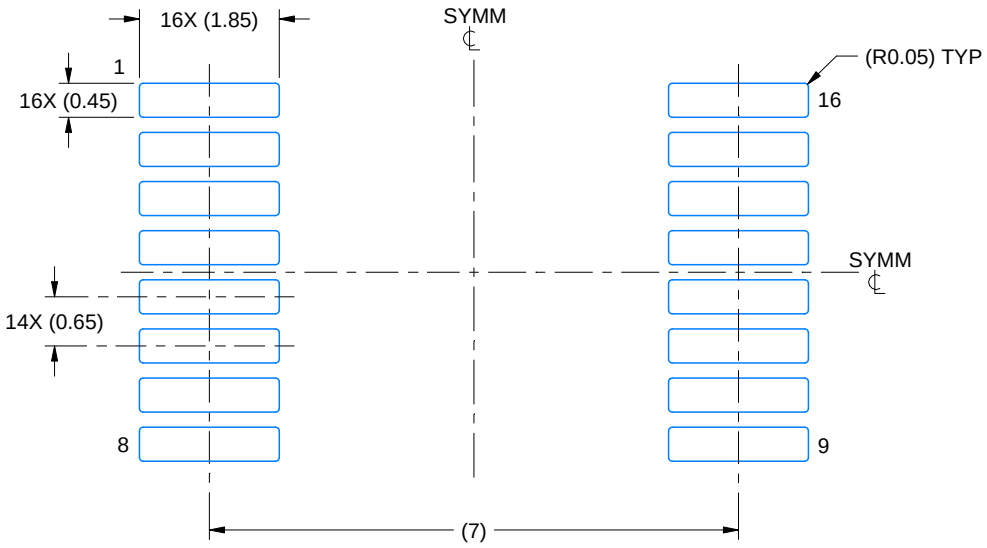

LAND PATTERN EXAMPLE
EXPOSED METAL SHOWN
SCALE: 10X

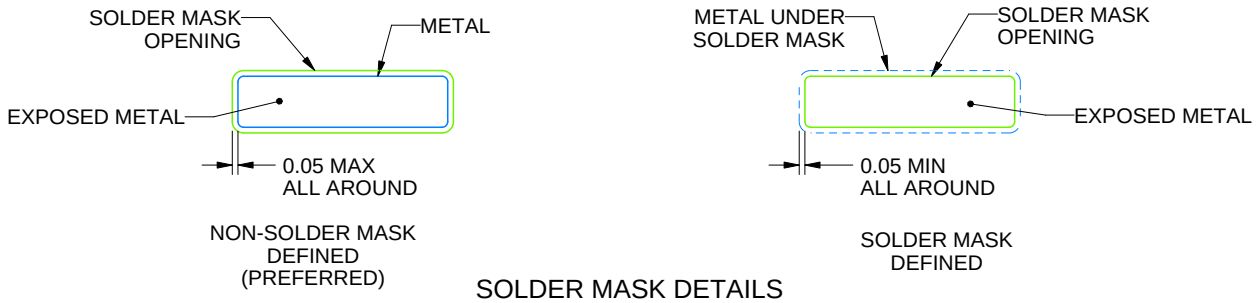

SOLDER MASK DETAILS

4220763/A 05/2022

NOTES: (continued)

5. Publication IPC-7351 may have alternate designs.
6. Solder mask tolerances between and around signal pads can vary based on board fabrication site.

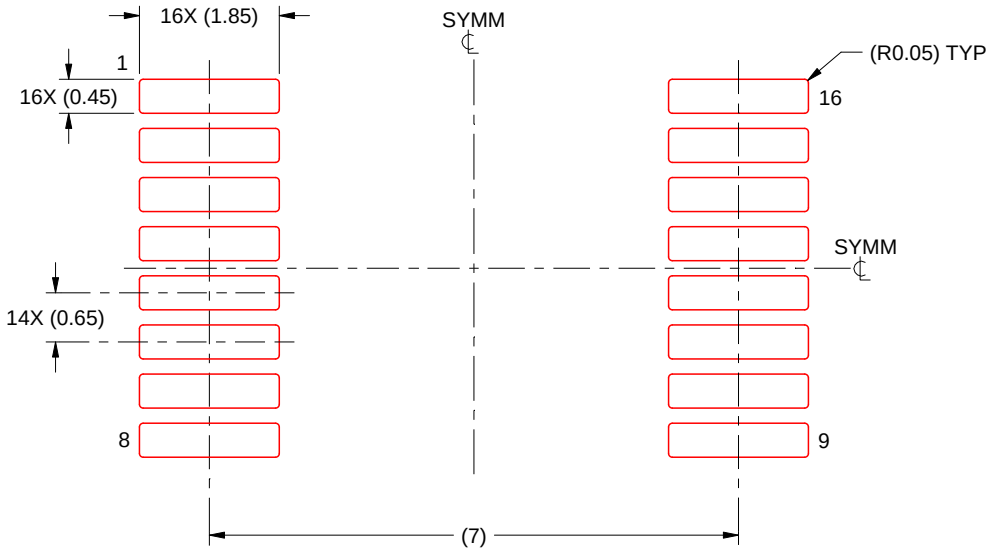

SOLDER PASTE EXAMPLE
BASED ON 0.125 mm THICK STENCIL
SCALE: 10X

4220763/A 05/2022

NOTES: (continued)

7. Laser cutting apertures with trapezoidal walls and rounded corners may offer better paste release. IPC-7525 may have alternate design recommendations.
8. Board assembly site may have different recommendations for stencil design.

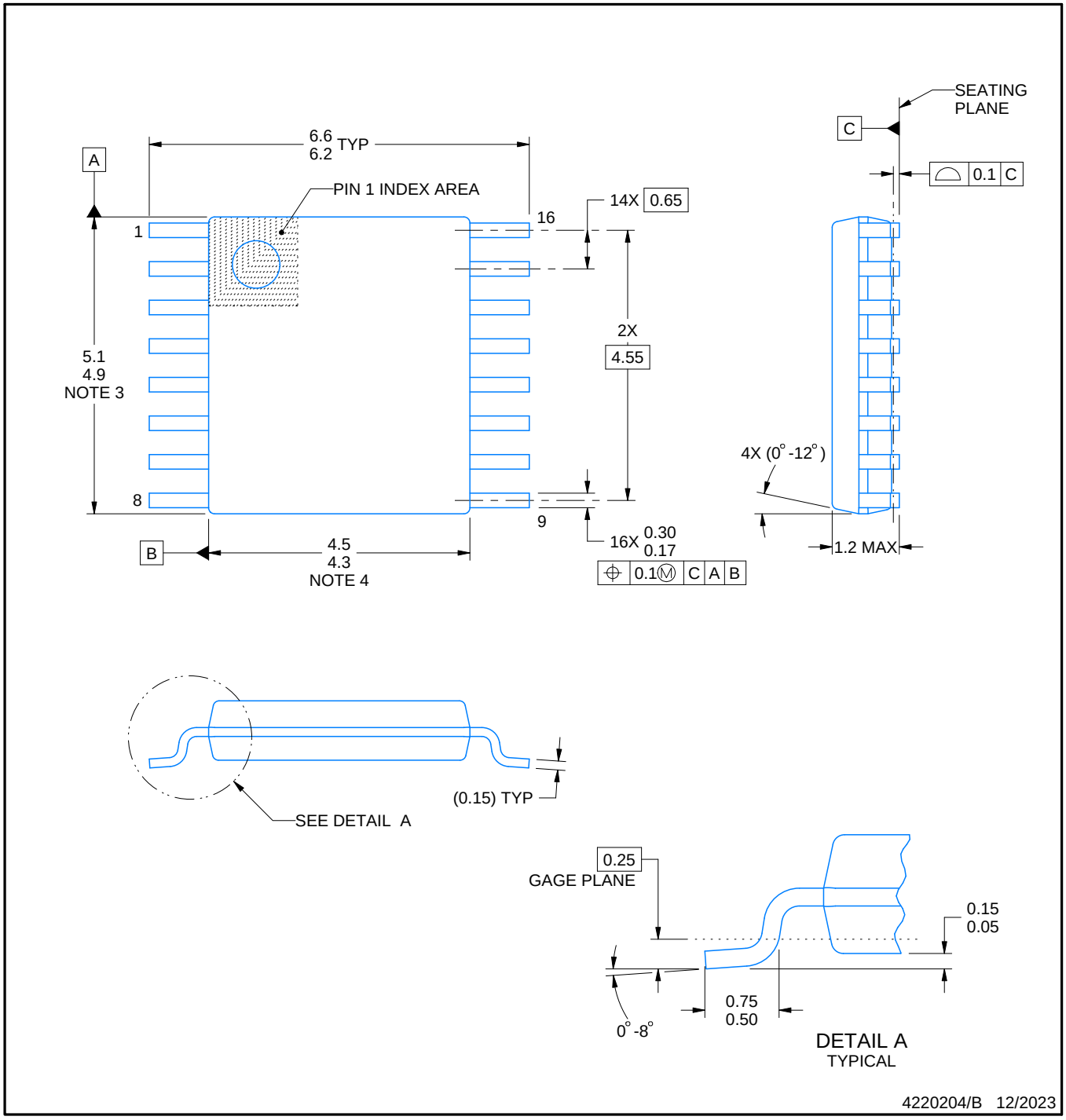

NOTES:

1. All linear dimensions are in millimeters. Any dimensions in parenthesis are for reference only. Dimensioning and tolerancing per ASME Y14.5M.
2. This drawing is subject to change without notice.
3. This dimension does not include mold flash, protrusions, or gate burrs. Mold flash, protrusions, or gate burrs shall not exceed 0.15 mm per side.
4. This dimension does not include interlead flash. Interlead flash shall not exceed 0.25 mm per side.
5. Reference JEDEC registration MO-153.

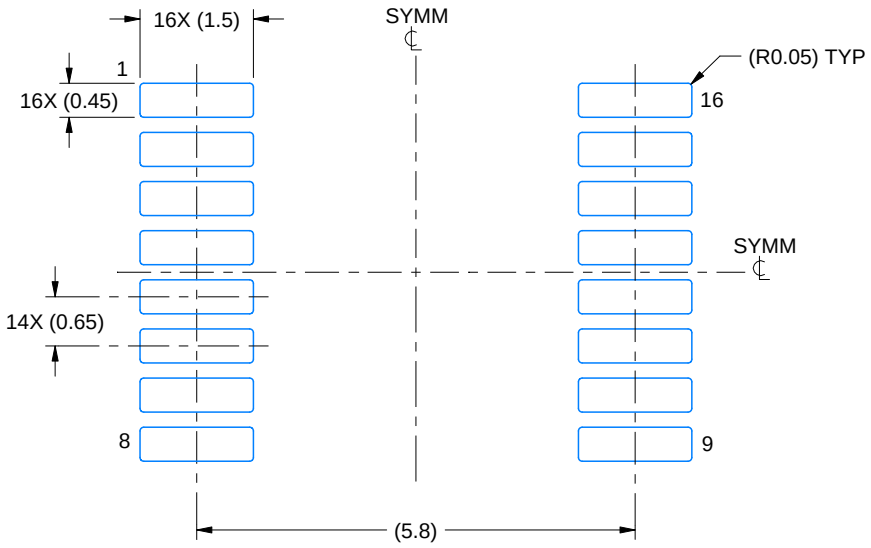

LAND PATTERN EXAMPLE
EXPOSED METAL SHOWN
SCALE: 10X

NON-SOLDER MASK DEFINED (PREFERRED)

SOLDER MASK DEFINED

SOLDER MASK DETAILS

4220204/B 12/2023

NOTES: (continued)

6. Publication IPC-7351 may have alternate designs.
7. Solder mask tolerances between and around signal pads can vary based on board fabrication site.

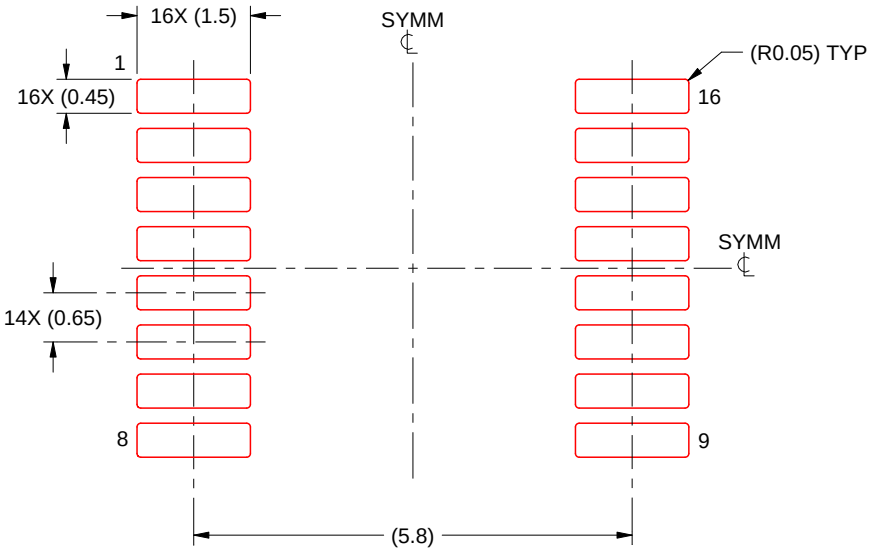

SOLDER PASTE EXAMPLE
BASED ON 0.125 mm THICK STENCIL
SCALE: 10X

4220204/B 12/2023

NOTES: (continued)

8. Laser cutting apertures with trapezoidal walls and rounded corners may offer better paste release. IPC-7525 may have alternate design recommendations.
9. Board assembly site may have different recommendations for stencil design.

IMPORTANT NOTICE AND DISCLAIMER

TI PROVIDES TECHNICAL AND RELIABILITY DATA (INCLUDING DATASHEETS), DESIGN RESOURCES (INCLUDING REFERENCE DESIGNS), APPLICATION OR OTHER DESIGN ADVICE, WEB TOOLS, SAFETY INFORMATION, AND OTHER RESOURCES “AS IS” AND WITH ALL FAULTS, AND DISCLAIMS ALL WARRANTIES, EXPRESS AND IMPLIED, INCLUDING WITHOUT LIMITATION ANY IMPLIED WARRANTIES OF MERCHANTABILITY, FITNESS FOR A PARTICULAR PURPOSE OR NON-INFRINGEMENT OF THIRD PARTY INTELLECTUAL PROPERTY RIGHTS.

These resources are intended for skilled developers designing with TI products. You are solely responsible for (1) selecting the appropriate TI products for your application, (2) designing, validating and testing your application, and (3) ensuring your application meets applicable standards, and any other safety, security, regulatory or other requirements.

These resources are subject to change without notice. TI grants you permission to use these resources only for development of an application that uses the TI products described in the resource. Other reproduction and display of these resources is prohibited. No license is granted to any other TI intellectual property right or to any third party intellectual property right. TI disclaims responsibility for, and you fully indemnify TI and its representatives against any claims, damages, costs, losses, and liabilities arising out of your use of these resources.

TI’s products are provided subject to TI’s Terms of Sale, TI’s General Quality Guidelines, or other applicable terms available either on ti.com or provided in conjunction with such TI products. TI’s provision of these resources does not expand or otherwise alter TI’s applicable warranties or warranty disclaimers for TI products. Unless TI explicitly designates a product as custom or customer-specified, TI products are standard, catalog, general purpose devices.

TI objects to and rejects any additional or different terms you may propose.

Copyright © 2026, Texas Instruments Incorporated

Last updated 10/2025