- Three-State Versions of '151, 'LS151, 'S151
- Three-State Outputs Interface Directly with System Bus
- Perform Parallel-to-Serial Conversion
- Permit Multiplexing from N-lines to One Line
- Complementary Outputs Provide True and Inverted Data
- Fully Compatible with Most TTL Circuits

TYPE	MAX NO. OF COMMON OUTPUTS	TYPICAL AVG PROP DELAY TIME (D TO Y)	TYPICAL POWER DISSIPATION
SN54251	49	17 ns	250 mW
SN74251	129	17 ns	250 mW
SN54LS251	49	17 ns	35 mW
SN74LS251	129	17 ns	35 mW
SN54S251	39	8 ns	275 mW
SN74S251	129	8 ns	275 mW

description

These monolithic data selectors/multiplexers contain full on-chip binary decoding to select one-of-eight data sources and feature a strobe-controlled three-state output. The strobe must be at a low logic level to enable these devices. The three-state outputs permit a number of outputs to be connected to a common bus. When the strobe input is high, both outputs are in a high-impedance state in which both the upper and lower transistors of each totem-pole output are off, and the output neither drives nor loads the bus significantly. When the strobe is low, the outputs are activated and operate as standard TTL totem-pole outputs.

To minimize the possibility that two outputs will attempt to take a common bus to opposite logic levels, the output control circuitry is designed so that the average output disable time is shorter than the average output enable time. The SN54251 and SN74251 have output clamp diodes to attenuate reflections on the bus line.

SN54251, SN54LS251, SN54S251 . . . J OR W PACKAGE
SN74251 . . . N PACKAGE
SN74LS251, SN74S251 . . . D OR N PACKAGE
(TOP VIEW)

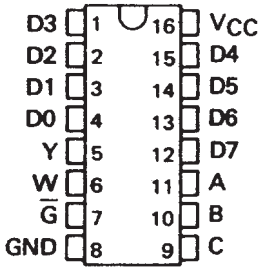

SN54LS251, SN54S251 . . . FK PACKAGE
(TOP VIEW)

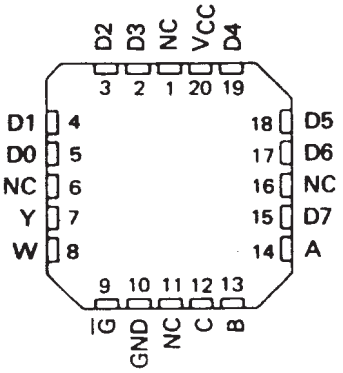

NC – No internal connection

FUNCTION TABLE

INPUTS				OUTPUTS	
SELECT			ENABLE		
C	B	A	$\overline{G}$	Y	W
X	X	X	H	Z	Z
L	L	L	L	D0	$\overline{D0}$
L	L	H	L	D1	$\overline{D1}$
L	H	L	L	D2	$\overline{D2}$
L	H	H	L	D3	$\overline{D3}$
H	L	L	L	D4	$\overline{D4}$
H	L	H	L	D5	$\overline{D5}$
H	H	L	L	D6	$\overline{D6}$
H	H	H	L	D7	$\overline{D7}$

H = high logic level, L = low logic level
X = irrelevant, Z = high impedance (off)
D0, D1 . . . D7 = the level of the respective D input

PRODUCTION DATA information is current as of publication date. Products conform to specifications per the terms of Texas Instruments standard warranty. Production processing does not necessarily include testing of all parameters.

Copyright © 1988, Texas Instruments Incorporated

logic diagram (positive logic)

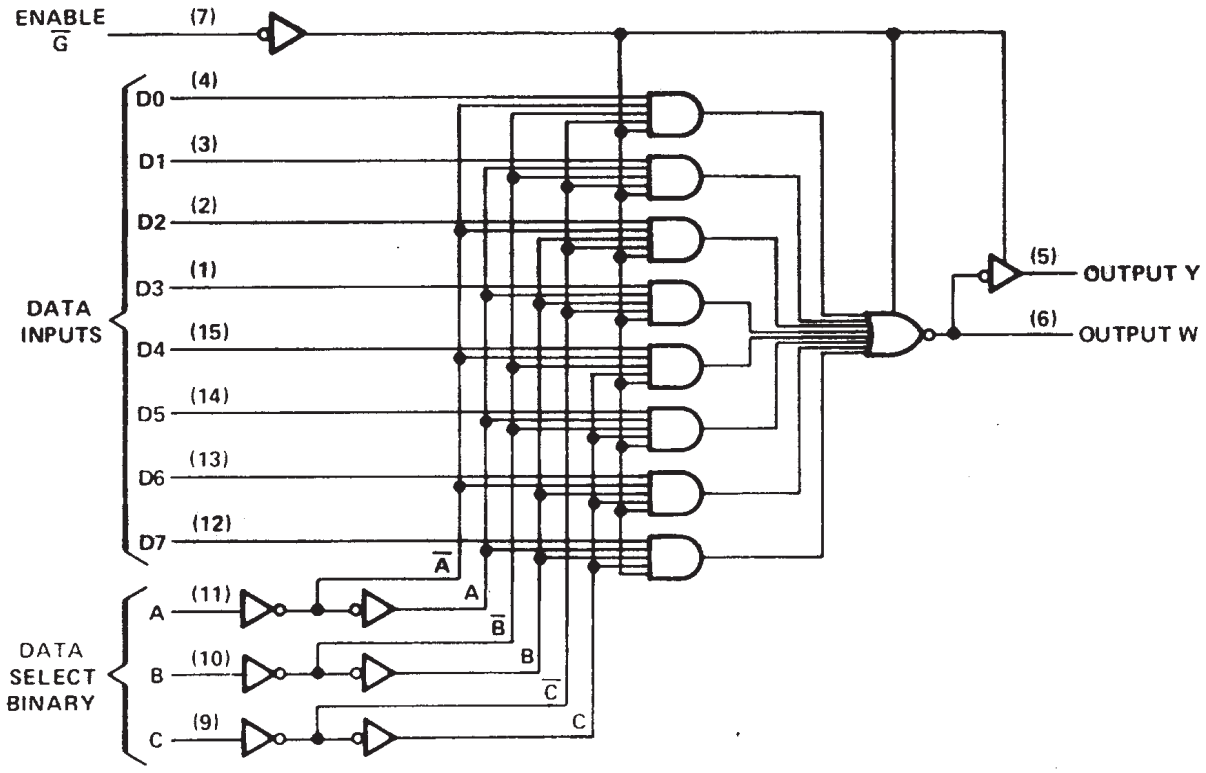

logic symbol†

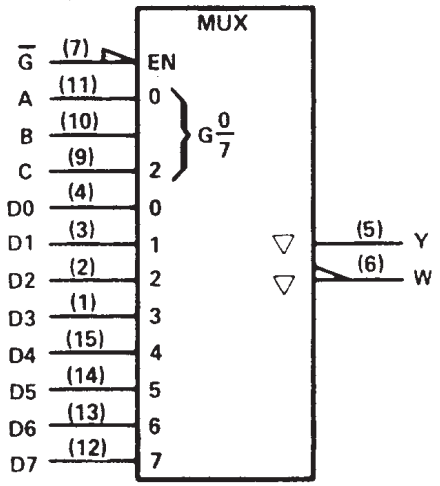

†This symbol is in accordance with ANSI/IEEE Std. 91-1984 and IEC Publication 617-12.
Pin numbers shown are for D, J, N, and W packages.

absolute maximum ratings over operating free-air temperature range (unless otherwise noted)

Supply voltage, V_{CC} (see Note 1) . . . . . 7 V
Input voltage . . . . . 5.5 V
Off-state output voltage . . . . . 5.5 V
Operating free-air temperature range: SN54251 . . . . . –55°C to 125°C
SN74251 . . . . . 0°C to 70°C
Storage temperature range . . . . . –65°C to 150°C

NOTE 1: Voltage values are with respect to network ground terminal.

recommended operating conditions

	SN54251			SN74251			UNIT
	MIN	NOM	MAX	MIN	NOM	MAX	
Supply voltage, V_{CC}	4.5	5	5.5	4.75	5	5.25	V
High-level output current, I_{OH}			–2			–5.2	mA
Low-level output current, I_{OL}			16			16	mA
Operating free-air temperature, T_A	–55		125	0		70	°C

electrical characteristics over recommended operating free-air temperature range (unless otherwise noted)

PARAMETER		TEST CONDITIONS†		MIN	TYP‡	MAX	UNIT
V_{IH}	High-level input voltage			2			V
V_{IL}	Low-level input voltage					0.8	V
V_{IK}	Input clamp voltage	V_{CC} = MIN,	I_I = –12 mA			–1.5	V
V_{OH}	High-level output voltage	V_{CC} = MIN, V_{IL} = 0.8 V,	V_{IH} = 2 V, I_{OH} = MAX	2.4	3.2		V
V_{OL}	Low-level output voltage	V_{CC} = MIN, V_{IL} = 0.8 V,	V_{IH} = 2 V, I_{OL} = 16 mA		0.2	0.4	V
I_{OZ}	Off-state (high-impedance-state) output current	V_{CC} = MAX, V_{IH} = 2 V	V_O = 2.4 V			40	μA
			V_O = 0.4 V			–40	
V_O	Output clamp voltage	V_{CC} = MAX, V_{IH} = 4.5 V	I_O = –12 mA			–1.5	V
			I_O = 12 mA			V_{CC}+1.5	
I_I	Input current at maximum input voltage	V_{CC} = MAX,	V_I = 5.5 V			1	mA
I_{IH}	High-level input current	V_{CC} = MAX,	V_I = 2.4 V			40	μA
I_{IL}	Low-level input current	V_{CC} = MAX,	V_I = 0.4 V			–1.6	mA
I_{OS}	Short-circuit output current§	V_{CC} = MAX		–18		–55	mA
I_{CC}	Supply current	V_{CC} = MAX, All outputs open	All inputs at 4.5 V,		38	62	mA

† For conditions shown as MIN or MAX, use the appropriate value specified under recommended operating conditions for the applicable type.
‡ All typical values are at V_{CC} = 5 V, T_A = 25°C.
§ Not more than one output should be shorted at a time.

switching characteristics, V_{CC} = 5 V, T_A = 25°C

PARAMETER†	FROM (INPUT)	TO (OUTPUT)	TEST CONDITIONS	MIN	TYP	MAX	UNIT
t_{PLH}	A, B, or C (4 levels)	Y	C_L = 50 pF, R_L = 400 Ω, See Note 2		29	45	ns
t_{PHL}					28	45	
t_{PLH}	A, B, or C (3 levels)	W			20	33	ns
t_{PHL}					21	33	
t_{PLH}	Any D	Y			17	28	ns
t_{PHL}					18	28	
t_{PLH}	Any D	W			10	15	ns
t_{PHL}					9	15	
t_{PZH}	$\overline{G}$	Y			17	27	ns
t_{PZL}					26	40	
t_{PZH}	$\overline{G}$	W			17	27	ns
t_{PZL}					24	40	
t_{PHZ}	$\overline{G}$	Y	C_L = 5 pF, R_L = 400 Ω, See Note 2		5	8	ns
t_{PLZ}					15	23	
t_{PHZ}	$\overline{G}$	W			5	8	ns
t_{PLZ}					15	23	

†t_{PLH} = Propagation delay time, low-to-high-level output
t_{PHL} = Propagation delay time, high-to-low-level output
t_{PZH} = Output enable time to high level
t_{PZL} = Output enable time to low level
t_{PHZ} = Output disable time from high level
t_{PLZ} = Output disable time from low level
NOTE 2: Load circuits and voltage waveforms are shown in Section 1.

schematics of inputs and outputs

EQUIVALENT OF EACH INPUT

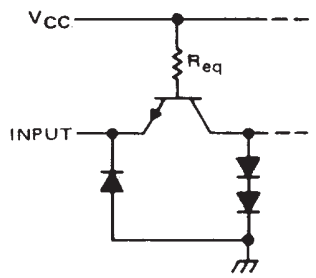

Select: R_{eq} = 6 kΩ NOM
Other inputs: R_{eq} = 4 kΩ NOM

TYPICAL OF BOTH OUTPUTS

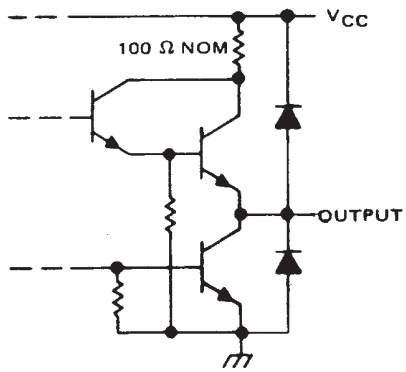

absolute maximum ratings over operating free-air temperature range (unless otherwise noted)

Supply voltage, V_{CC} (see Note 1)	7 V
Input voltage	7 V
Off-state output voltage	5.5 V
Operating free-air temperature range: SN54LS251	55°C to 125°C
SN74LS251	0°C to 70°C
Storage temperature range	–65°C to 150°C

NOTE 1: Voltage values are with respect to network ground terminal.

recommended operating conditions

		SN54LS251			SN74LS251			UNIT
		MIN	NOM	MAX	MIN	NOM	MAX	
V_{CC}	Supply voltage	4.5	5	5.5	4.75	5	5.25	V
V_{IH}	High-level input voltage	2			2			V
V_{IL}	Low-level input voltage			0.7			0.8	V
I_{OH}	High-level output current			– 1			– 2.6	mA
I_{OL}	Low-level output current			4			8	mA
T_A	Operating free-air temperature	– 55		125	0		70	°C

electrical characteristics over recommended operating free-air temperature range (unless otherwise noted)

PARAMETER		TEST CONDITIONS†			SN54LS251			SN74LS251			UNIT
					MIN	TYP‡	MAX	MIN	TYP‡	MAX	
V_{IK}		V_{CC} = MIN, I_I = – 18 mA					– 1.5			– 1.5	V
V_{OH}		V_{CC} = MIN, V_{IH} = 2 V, V_{IL} = MAX, I_{OH} = MAX			2.4	3.4		2.4	3.1		V
V_{OL}		V_{CC} = MIN, V_{IH} = 2 V, V_{IL} = MAX	I_{OL} = 4 mA			0.25	0.4		0.25	0.4	V
			I_{OL} = 8 mA						0.35	0.5	
I_{OZ}		V_{CC} = MAX, V_{IH} = 2 V	V_O = 2.7 V				20			20	μA
			V_O = 0.4 V				–20			– 20	
I_I		V_{CC} = MAX, V_I = 7 V					0.1			0.1	mA
I_{IH}		V_{CC} = MAX, V_I = 2.7 V					20			20	μA
I_{IL}	Enable $\overline{G}$	V_{CC} = MAX, V_I = 0.4					– 0.2			– 0.2	mA
	All other						– 0.4			– 0.4	
I_{OS}§		V_{CC} = MAX			– 30		– 130	– 30		– 130	mA
I_{CC}		V_{CC} = MAX, See Note 3	Condition A			6.1	10		6.1	10	mA
			Condition B			7.1	12		7.1	12	

† For conditions shown as MIN or MAX, use the appropriate value specified under recommended operating conditions for the applicable type.
‡ All typical values are at V_{CC} = 5 V, T_A = 25°C.
§ Not more than one output should be shorted at a time, and duration of the short-circuit should not exceed one second.
NOTE 3: I_{CC} is measured with the outputs open and all data and select inputs at 4.5 V under the following conditions:
A. Enable grounded.
B. Strobe at 4.5 V.

switching characteristics, V_{CC} = 5 V, T_A = 25°C

PARAMETER†	FROM (INPUT)	TO (OUTPUT)	TEST CONDITIONS	MIN	TYP	MAX	UNIT
t_{PLH}	A, B, or C (4 levels)	Y	C_L = 15 pF, R_L = 2 kΩ, See Note 2		29	45	ns
t_{PHL}					28	45	
t_{PLH}	A, B, or C (3 levels)	W			20	33	ns
t_{PHL}					21	33	
t_{PLH}	Any D	Y			17	28	ns
t_{PHL}					18	28	
t_{PLH}	Any D	W			10	15	ns
t_{PHL}					9	15	
t_{PZH}	$\overline{G}$	Y			30	45	ns
t_{PZL}					26	40	
t_{PZH}	$\overline{G}$	W			17	27	ns
t_{PZL}					24	40	
t_{PHZ}	$\overline{G}$	Y	C_L = 5 pF, R_L = 2 kΩ, See Note 2		30	45	ns
t_{PLZ}					15	25	
t_{PHZ}	$\overline{G}$	W			37	55	ns
t_{PLZ}					15	25	

†t_{PLH} = Propagation delay time, low-to-high-level output
t_{PHL} = Propagation delay time, high-to-low-level output
t_{PZH} = Output enable time to high level
t_{PZL} = Output enable time to low level
t_{PHZ} = Output disable time from high level
t_{PLZ} = Output disable time from low level
NOTE 2: Load circuits and voltage waveforms are shown in Section 1.

schematics of inputs and outputs

EQUIVALENT OF $\overline{G}$ INPUT

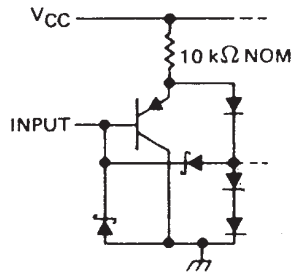

EQUIVALENT OF ALL OTHER INPUTS

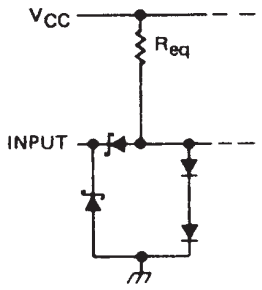

A, B, C: R_{eq} = 20 kΩ NOM
D0 thru D7: R_{eq} = 17 kΩ NOM

TYPICAL OF BOTH OUTPUTS

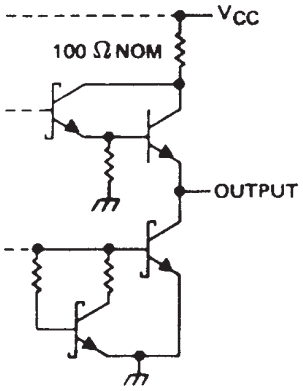

absolute maximum ratings over operating free-air temperature range (unless otherwise noted)

Supply voltage, V_{CC} (see Note 1) . . . . . 7 V
Input voltage . . . . . 5.5 V
Off-state output voltage . . . . . 5.5 V
Operating free-air temperature range: SN54S251 . . . . . –55°C to 125°C
SN74S251 . . . . . 0°C to 70°C
Storage temperature range . . . . . –65°C to 150°C

NOTE 1: Voltage values are with respect to network ground terminal.

recommended operating conditions

	SN54S251			SN74S251			UNIT
	MIN	NOM	MAX	MIN	NOM	MAX	
Supply voltage, V_{CC}	4.5	5	5.5	4.75	5	5.25	V
High-level output current, I_{OH}			–2			–6.5	mA
Low-level output current, I_{OL}			20			20	mA
Operating free-air temperature, T_A	–55		125	0		70	°C

electrical characteristics over recommended operating free-air temperature range (unless otherwise noted)

PARAMETER		TEST CONDITIONS†			MIN	TYP‡	MAX	UNIT
V_{IH}	High-level input voltage				2			V
V_{IL}	Low-level input voltage						0.8	V
V_{IK}	Input clamp voltage	V_{CC} = MIN,	I_I = –18 mA				–1.2	V
V_{OH}	High-level output voltage	V_{CC} = MIN, V_{IH} = 2 V, V_{IL} = 0.8 V, I_{OH} = MAX		SN54S'	2.4	3.4		V
				SN74S'	2.4	3.2		
V_{OL}	Low-level output voltage	V_{CC} = MIN, V_{IH} = 2 V, V_{IL} = 0.8 V, I_{OL} = 20 mA					0.5	V
I_{OZ}	Off-state (high-impedance-state) output current	V_{CC} = MAX, V_{IH} = 2 V	V_O = 2.4 V				50	μA
			V_O = 0.5 V				–50	
I_I	Input current at maximum input voltage	V_{CC} = MAX,	V_I = 5.5 V				1	mA
I_{IH}	High-level input current	V_{CC} = MAX,	V_I = 2.7 V				50	μA
I_{IL}	Low-level input current	V_{CC} = MAX,	V_I = 0.5 V				–2	mA
I_{OS}	Short-circuit output current§	V_{CC} = MAX			–40		–100	mA
I_{CC}	Supply current	V_{CC} = MAX, All outputs open	All inputs at 4.5 V,			55	85	mA

†For conditions shown as MIN or MAX, use the appropriate value specified under recommended operating conditions for the applicable type.
‡All typical values are at V_{CC} = 5 V, T_A = 25°C.
§Not more than one output should be shorted at a time, and duration of the short-circuit should not exceed one second.

switching characteristics, V_{CC} = 5 V, T_A = 25°C

PARAMETER†	FROM (INPUT)	TO (OUTPUT)	TEST CONDITIONS	MIN	TYP	MAX	UNIT
t_{PLH}	A, B, or C (4 levels)	Y	C_L = 15 pF, R_L = 280 Ω, See Note 2		12	18	ns
t_{PHL}					13	19.5	
t_{PLH}	A, B, or C (3 levels)	W			10	15	ns
t_{PHL}					9	13.5	
t_{PLH}	Any D	Y			8	12	ns
t_{PHL}					8	12	
t_{PLH}	Any D	W			4.5	7	ns
t_{PHL}					4.5	7	
t_{PZH}	$\overline{G}$	Y	C_L = 50 pF, R_L = 280 Ω, See Note 2		13	19.5	ns
t_{PZL}					14	21	
t_{PZH}	$\overline{G}$	W			13	19.5	ns
t_{PZL}					14	21	
t_{PHZ}	$\overline{G}$	Y	C_L = 5 pF, R_L = 280 Ω, See Note 2		5.5	8.5	ns
t_{PLZ}					9	14	
t_{PHZ}	$\overline{G}$	W			5.5	8.5	ns
t_{PLZ}					9	14	

† t_{PLH} = Propagation delay time, low-to-high-level output
t_{PHL} = Propagation delay time, high-to-low-level output
t_{PZH} = Output enable time to high level
t_{PZL} = Output enable time to low level
t_{PHZ} = Output disable time from high level
t_{PLZ} = Output disable time from low level
NOTE 2: Load circuits and voltage waveforms are shown in Section 1.

schematics of inputs and outputs

EQUIVALENT OF EACH INPUT

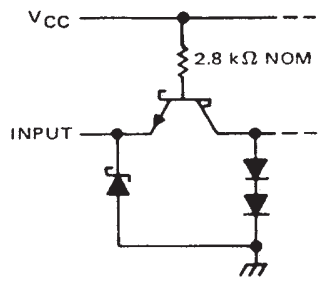

TYPICAL OF BOTH OUTPUTS

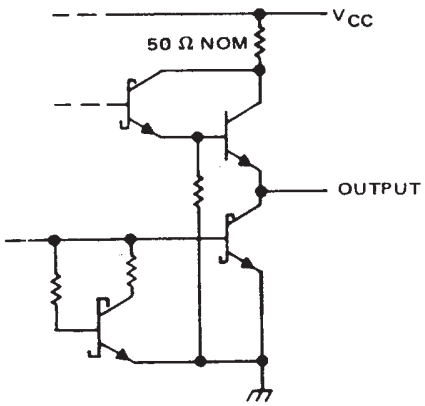

PACKAGING INFORMATION

Orderable part number	Status (1)	Material type (2)	Package | Pins	Package qty | Carrier	RoHS (3)	Lead finish/ Ball material (4)	MSL rating/ Peak reflow (5)	Op temp (°C)	Part marking (6)
7601601EA	Active	Production	CDIP (J) | 16	25 | TUBE	No	SNPB	N/A for Pkg Type	-55 to 125	7601601EA SNJ54LS251J
7601601FA	Active	Production	CFP (W) | 16	25 | TUBE	No	SNPB	N/A for Pkg Type	-55 to 125	7601601FA SNJ54LS251W
7601601FA	Active	Production	CFP (W) | 16	25 | TUBE	No	SNPB	N/A for Pkg Type	-55 to 125	7601601FA SNJ54LS251W
JM38510/30905BEA	Active	Production	CDIP (J) | 16	25 | TUBE	No	SNPB	N/A for Pkg Type	-55 to 125	JM38510/ 30905BEA
JM38510/30905BEA	Active	Production	CDIP (J) | 16	25 | TUBE	No	SNPB	N/A for Pkg Type	-55 to 125	JM38510/ 30905BEA
JM38510/30905BEA.A	Active	Production	CDIP (J) | 16	25 | TUBE	No	SNPB	N/A for Pkg Type	-55 to 125	JM38510/ 30905BEA
JM38510/30905BEA.A	Active	Production	CDIP (J) | 16	25 | TUBE	No	SNPB	N/A for Pkg Type	-55 to 125	JM38510/ 30905BEA
M38510/30905BEA	Active	Production	CDIP (J) | 16	25 | TUBE	No	SNPB	N/A for Pkg Type	-55 to 125	JM38510/ 30905BEA
M38510/30905BEA	Active	Production	CDIP (J) | 16	25 | TUBE	No	SNPB	N/A for Pkg Type	-55 to 125	JM38510/ 30905BEA
SN54LS251J	Active	Production	CDIP (J) | 16	25 | TUBE	No	SNPB	N/A for Pkg Type	-55 to 125	SN54LS251J
SN54LS251J	Active	Production	CDIP (J) | 16	25 | TUBE	No	SNPB	N/A for Pkg Type	-55 to 125	SN54LS251J
SN54LS251J.A	Active	Production	CDIP (J) | 16	25 | TUBE	No	SNPB	N/A for Pkg Type	-55 to 125	SN54LS251J
SN54LS251J.A	Active	Production	CDIP (J) | 16	25 | TUBE	No	SNPB	N/A for Pkg Type	-55 to 125	SN54LS251J
SN74LS251D	Obsolete	Production	SOIC (D) | 16	-	-	Call TI	Call TI	0 to 70	LS251
SN74LS251D	Obsolete	Production	SOIC (D) | 16	-	-	Call TI	Call TI	0 to 70	LS251
SN74LS251DR	Active	Production	SOIC (D) | 16	2500 | LARGE T&R	Yes	NIPDAU	Level-1-260C-UNLIM	0 to 70	LS251
SN74LS251DR	Active	Production	SOIC (D) | 16	2500 | LARGE T&R	Yes	NIPDAU	Level-1-260C-UNLIM	0 to 70	LS251
SN74LS251DR.A	Active	Production	SOIC (D) | 16	2500 | LARGE T&R	Yes	NIPDAU	Level-1-260C-UNLIM	0 to 70	LS251
SN74LS251DR.A	Active	Production	SOIC (D) | 16	2500 | LARGE T&R	Yes	NIPDAU	Level-1-260C-UNLIM	0 to 70	LS251
SN74LS251N	Active	Production	PDIP (N) | 16	25 | TUBE	Yes	NIPDAU	N/A for Pkg Type	0 to 70	SN74LS251N
SN74LS251N	Active	Production	PDIP (N) | 16	25 | TUBE	Yes	NIPDAU	N/A for Pkg Type	0 to 70	SN74LS251N
SN74LS251N.A	Active	Production	PDIP (N) | 16	25 | TUBE	Yes	NIPDAU	N/A for Pkg Type	0 to 70	SN74LS251N

Orderable part number	Status (1)	Material type (2)	Package | Pins	Package qty | Carrier	RoHS (3)	Lead finish/ Ball material (4)	MSL rating/ Peak reflow (5)	Op temp (°C)	Part marking (6)
SN74LS251N.A	Active	Production	PDIP (N) | 16	25 | TUBE	Yes	NIPDAU	N/A for Pkg Type	0 to 70	SN74LS251N
SN74LS251NE4	Active	Production	PDIP (N) | 16	25 | TUBE	Yes	NIPDAU	N/A for Pkg Type	0 to 70	SN74LS251N
SN74LS251NE4	Active	Production	PDIP (N) | 16	25 | TUBE	Yes	NIPDAU	N/A for Pkg Type	0 to 70	SN74LS251N
SN74LS251NSR	Active	Production	SOP (NS) | 16	2000 | LARGE T&R	Yes	NIPDAU	Level-1-260C-UNLIM	0 to 70	74LS251
SN74LS251NSR	Active	Production	SOP (NS) | 16	2000 | LARGE T&R	Yes	NIPDAU	Level-1-260C-UNLIM	0 to 70	74LS251
SN74LS251NSR.A	Active	Production	SOP (NS) | 16	2000 | LARGE T&R	Yes	NIPDAU	Level-1-260C-UNLIM	0 to 70	74LS251
SN74LS251NSR.A	Active	Production	SOP (NS) | 16	2000 | LARGE T&R	Yes	NIPDAU	Level-1-260C-UNLIM	0 to 70	74LS251
SNJ54LS251FK	Active	Production	LCCC (FK) | 20	55 | TUBE	No	SNPB	N/A for Pkg Type	-55 to 125	SNJ54LS 251FK
SNJ54LS251FK	Active	Production	LCCC (FK) | 20	55 | TUBE	No	SNPB	N/A for Pkg Type	-55 to 125	SNJ54LS 251FK
SNJ54LS251FK.A	Active	Production	LCCC (FK) | 20	55 | TUBE	No	SNPB	N/A for Pkg Type	-55 to 125	SNJ54LS 251FK
SNJ54LS251FK.A	Active	Production	LCCC (FK) | 20	55 | TUBE	No	SNPB	N/A for Pkg Type	-55 to 125	SNJ54LS 251FK
SNJ54LS251J	Active	Production	CDIP (J) | 16	25 | TUBE	No	SNPB	N/A for Pkg Type	-55 to 125	7601601EA SNJ54LS251J
SNJ54LS251J	Active	Production	CDIP (J) | 16	25 | TUBE	No	SNPB	N/A for Pkg Type	-55 to 125	7601601EA SNJ54LS251J
SNJ54LS251J.A	Active	Production	CDIP (J) | 16	25 | TUBE	No	SNPB	N/A for Pkg Type	-55 to 125	7601601EA SNJ54LS251J
SNJ54LS251J.A	Active	Production	CDIP (J) | 16	25 | TUBE	No	SNPB	N/A for Pkg Type	-55 to 125	7601601EA SNJ54LS251J
SNJ54LS251W	Active	Production	CFP (W) | 16	25 | TUBE	No	SNPB	N/A for Pkg Type	-55 to 125	7601601FA SNJ54LS251W
SNJ54LS251W	Active	Production	CFP (W) | 16	25 | TUBE	No	SNPB	N/A for Pkg Type	-55 to 125	7601601FA SNJ54LS251W
SNJ54LS251W.A	Active	Production	CFP (W) | 16	25 | TUBE	No	SNPB	N/A for Pkg Type	-55 to 125	7601601FA SNJ54LS251W
SNJ54LS251W.A	Active	Production	CFP (W) | 16	25 | TUBE	No	SNPB	N/A for Pkg Type	-55 to 125	7601601FA SNJ54LS251W

(1) **Status:** For more details on status, see our product life cycle.

(2) **Material type:** When designated, preproduction parts are prototypes/experimental devices, and are not yet approved or released for full production. Testing and final process, including without limitation quality assurance, reliability performance testing, and/or process qualification, may not yet be complete, and this item is subject to further changes or possible discontinuation. If available for ordering, purchases will be subject to an additional waiver at checkout, and are intended for early internal evaluation purposes only. These items are sold without warranties of any kind.

(3) **RoHS values:** Yes, No, RoHS Exempt. See the TI RoHS Statement for additional information and value definition.

(4) **Lead finish/Ball material:** Parts may have multiple material finish options. Finish options are separated by a vertical ruled line. Lead finish/Ball material values may wrap to two lines if the finish value exceeds the maximum column width.

(5) **MSL rating/Peak reflow:** The moisture sensitivity level ratings and peak solder (reflow) temperatures. In the event that a part has multiple moisture sensitivity ratings, only the lowest level per JEDEC standards is shown. Refer to the shipping label for the actual reflow temperature that will be used to mount the part to the printed circuit board.

(6) **Part marking:** There may be an additional marking, which relates to the logo, the lot trace code information, or the environmental category of the part.

Multiple part markings will be inside parentheses. Only one part marking contained in parentheses and separated by a "~" will appear on a part. If a line is indented then it is a continuation of the previous line and the two combined represent the entire part marking for that device.

Important Information and Disclaimer: The information provided on this page represents TI's knowledge and belief as of the date that it is provided. TI bases its knowledge and belief on information provided by third parties, and makes no representation or warranty as to the accuracy of such information. Efforts are underway to better integrate information from third parties. TI has taken and continues to take reasonable steps to provide representative and accurate information but may not have conducted destructive testing or chemical analysis on incoming materials and chemicals. TI and TI suppliers consider certain information to be proprietary, and thus CAS numbers and other limited information may not be available for release.

In no event shall TI's liability arising out of such information exceed the total purchase price of the TI part(s) at issue in this document sold by TI to Customer on an annual basis.

OTHER QUALIFIED VERSIONS OF SN54LS251, SN74LS251 :

- Catalog : SN74LS251
- Military : SN54LS251

NOTE: Qualified Version Definitions:

- Catalog - TI's standard catalog product
- Military - QML certified for Military and Defense Applications

TAPE AND REEL INFORMATION

REEL DIMENSIONS

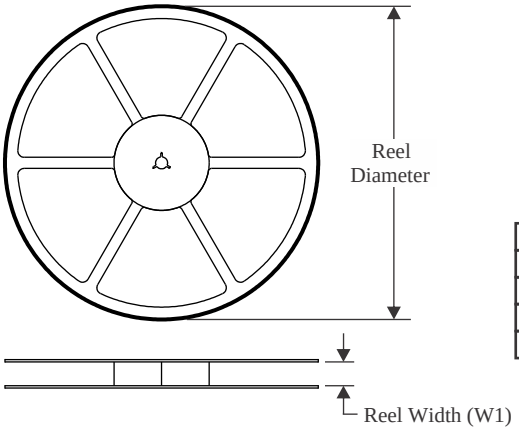

TAPE DIMENSIONS

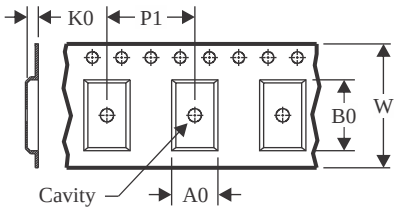

A0	Dimension designed to accommodate the component width
B0	Dimension designed to accommodate the component length
K0	Dimension designed to accommodate the component thickness
W	Overall width of the carrier tape
P1	Pitch between successive cavity centers

QUADRANT ASSIGNMENTS FOR PIN 1 ORIENTATION IN TAPE

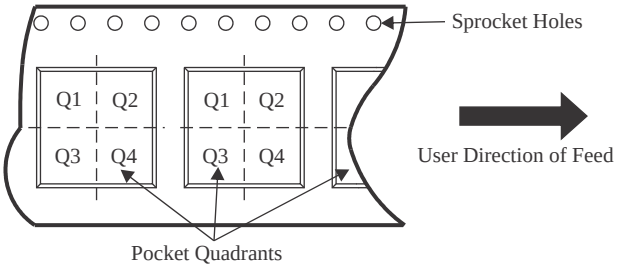

*All dimensions are nominal

Device	Package Type	Package Drawing	Pins	SPQ	Reel Diameter (mm)	Reel Width W1 (mm)	A0 (mm)	B0 (mm)	K0 (mm)	P1 (mm)	W (mm)	Pin1 Quadrant
SN74LS251DR	SOIC	D	16	2500	330.0	16.4	6.5	10.3	2.1	8.0	16.0	Q1
SN74LS251NSR	SOP	NS	16	2000	330.0	16.4	8.1	10.4	2.5	12.0	16.0	Q1
SN74LS251NSR	SOP	NS	16	2000	330.0	16.4	8.45	10.55	2.5	12.0	16.2	Q1

TAPE AND REEL BOX DIMENSIONS

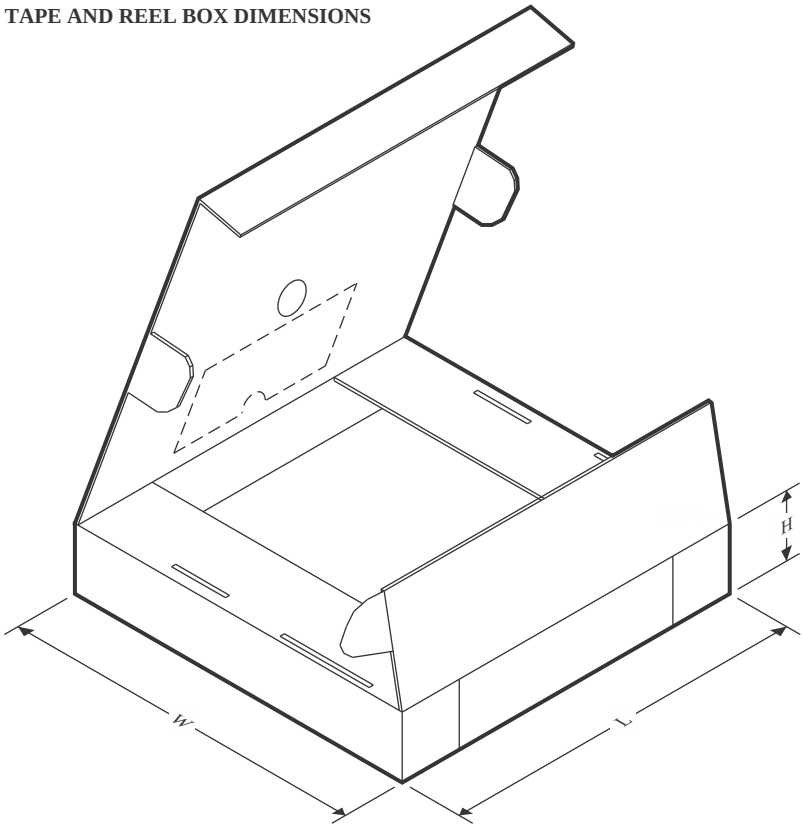

*All dimensions are nominal

Device	Package Type	Package Drawing	Pins	SPQ	Length (mm)	Width (mm)	Height (mm)
SN74LS251DR	SOIC	D	16	2500	353.0	353.0	32.0
SN74LS251NSR	SOP	NS	16	2000	353.0	353.0	32.0
SN74LS251NSR	SOP	NS	16	2000	353.0	353.0	32.0

TUBE

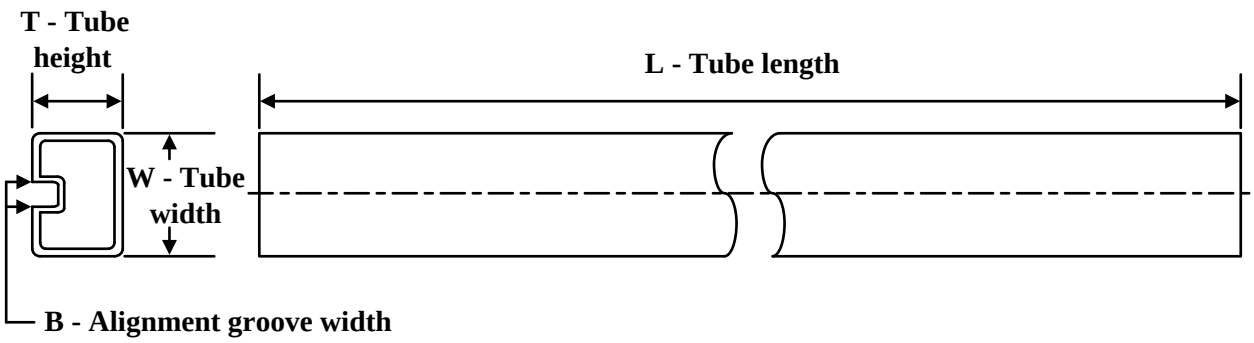

*All dimensions are nominal

Device	Package Name	Package Type	Pins	SPQ	L (mm)	W (mm)	T (µm)	B (mm)
7601601FA	W	CFP	16	25	506.98	26.16	6220	NA
SN74LS251N	N	PDIP	16	25	506	13.97	11230	4.32
SN74LS251N	N	PDIP	16	25	506	13.97	11230	4.32
SN74LS251N.A	N	PDIP	16	25	506	13.97	11230	4.32
SN74LS251N.A	N	PDIP	16	25	506	13.97	11230	4.32
SN74LS251NE4	N	PDIP	16	25	506	13.97	11230	4.32
SN74LS251NE4	N	PDIP	16	25	506	13.97	11230	4.32
SNJ54LS251FK	FK	LCCC	20	55	506.98	12.06	2030	NA
SNJ54LS251FK.A	FK	LCCC	20	55	506.98	12.06	2030	NA
SNJ54LS251W	W	CFP	16	25	506.98	26.16	6220	NA
SNJ54LS251W.A	W	CFP	16	25	506.98	26.16	6220	NA

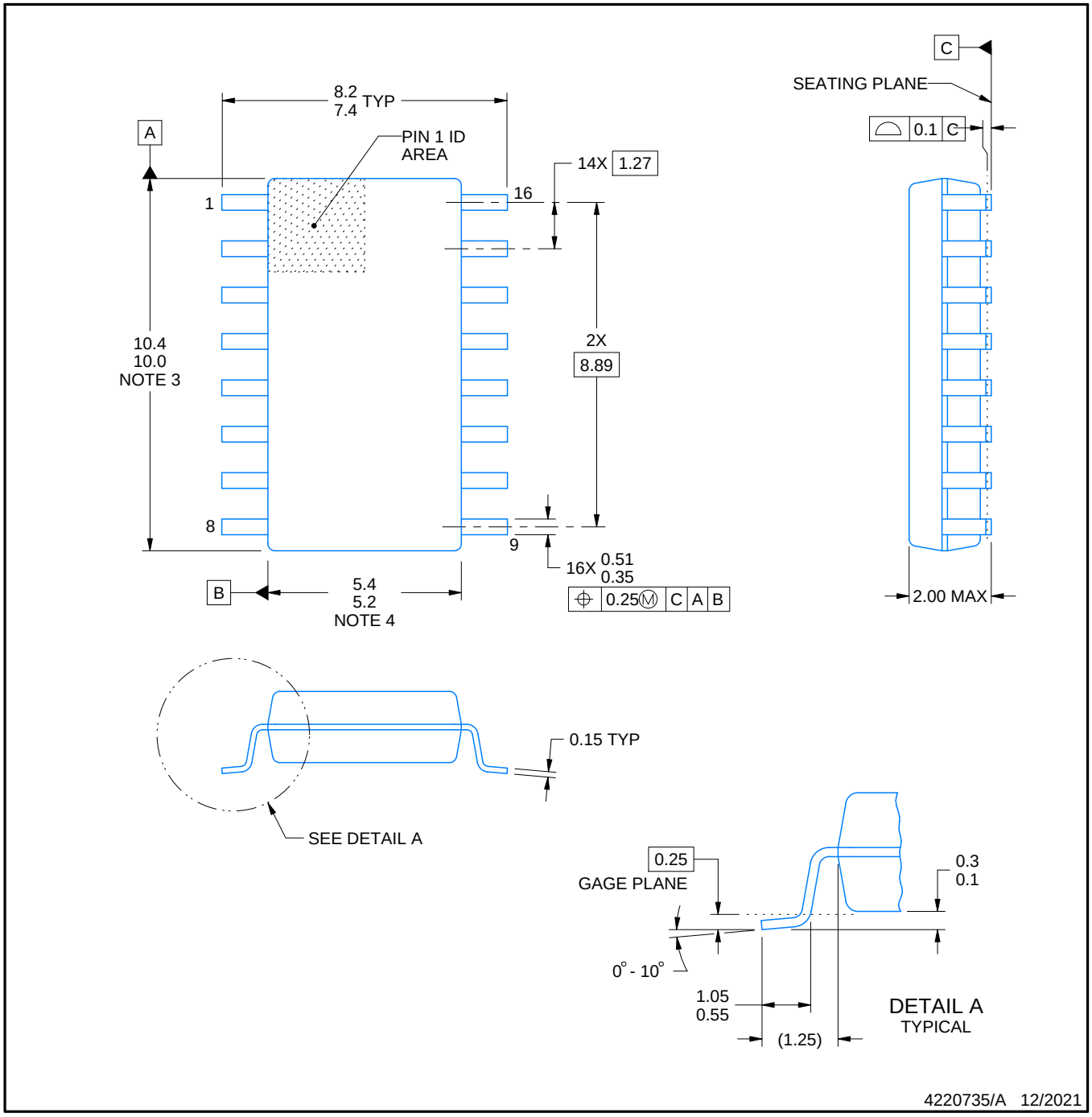

NOTES:

1. All linear dimensions are in millimeters. Dimensions in parenthesis are for reference only. Dimensioning and tolerancing per ASME Y14.5M.
2. This drawing is subject to change without notice.
3. This dimension does not include mold flash, protrusions, or gate burrs. Mold flash, protrusions, or gate burrs shall not exceed 0.15 mm, per side.
4. This dimension does not include interlead flash. Interlead flash shall not exceed 0.25 mm, per side.

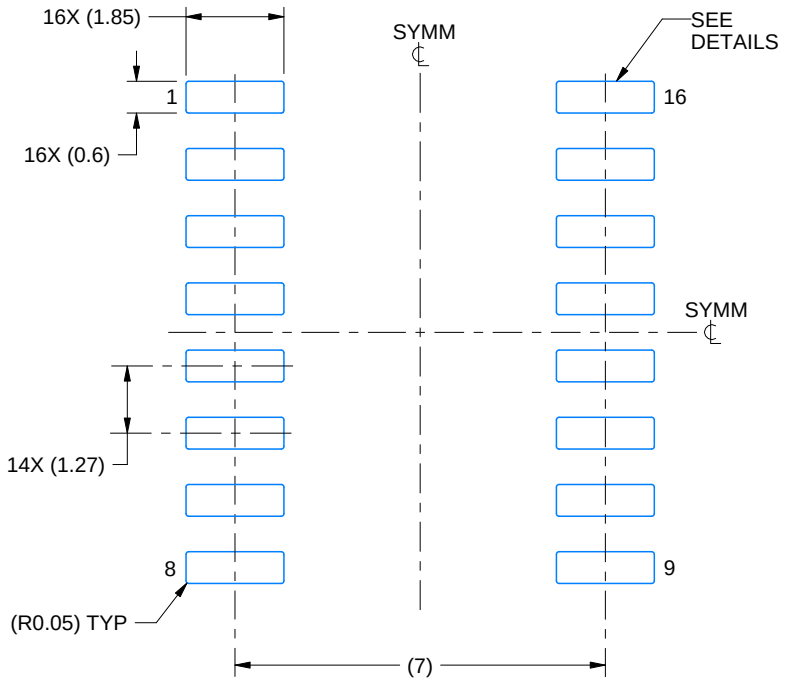

LAND PATTERN EXAMPLE
SCALE:7X

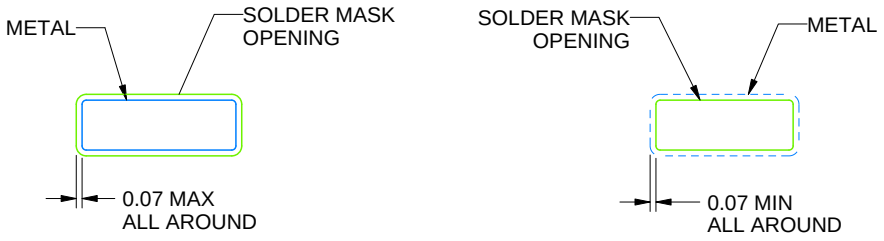

NON SOLDER MASK DEFINED

SOLDER MASK DEFINED

SOLDER MASK DETAILS

4220735/A 12/2021

NOTES: (continued)

5. Publication IPC-7351 may have alternate designs.
6. Solder mask tolerances between and around signal pads can vary based on board fabrication site.

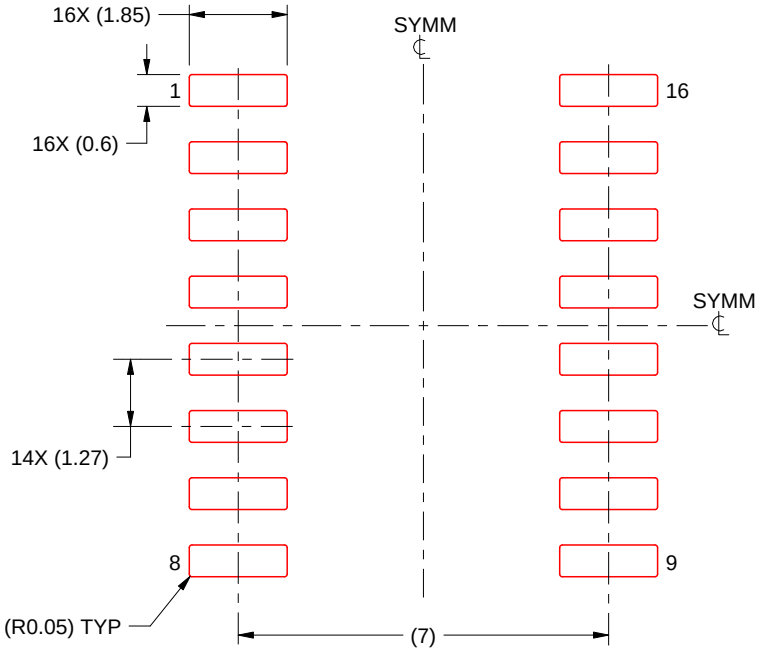

SOLDER PASTE EXAMPLE
BASED ON 0.125 mm THICK STENCIL
SCALE:7X

4220735/A 12/2021

NOTES: (continued)

7. Laser cutting apertures with trapezoidal walls and rounded corners may offer better paste release. IPC-7525 may have alternate design recommendations.
8. Board assembly site may have different recommendations for stencil design.

D (R–PDSO–G16) PLASTIC SMALL OUTLINE

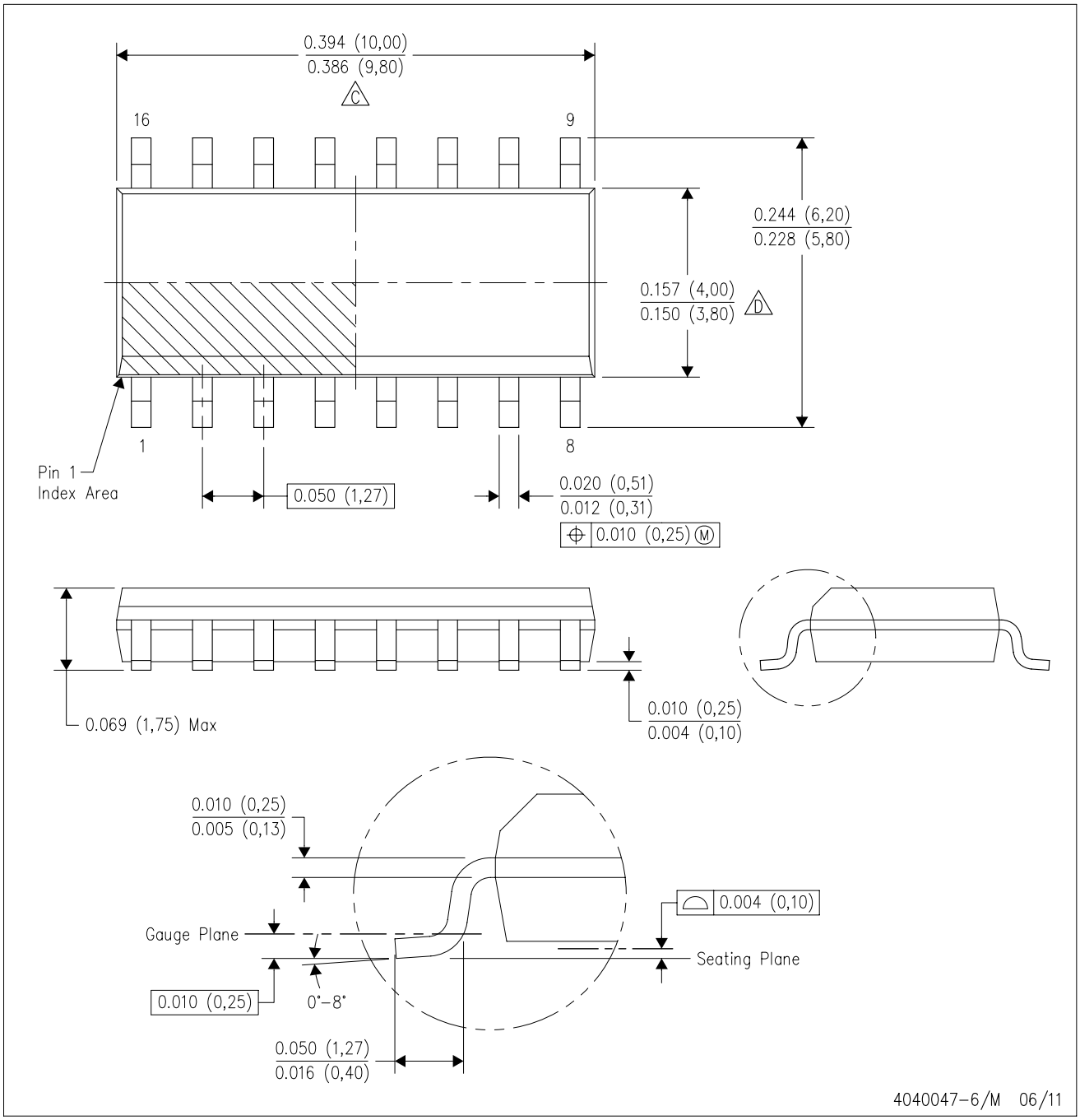

NOTES:
A. All linear dimensions are in inches (millimeters).
B. This drawing is subject to change without notice.
C. Body length does not include mold flash, protrusions, or gate burrs. Mold flash, protrusions, or gate burrs shall not exceed 0.006 (0,15) each side.
D. Body width does not include interlead flash. Interlead flash shall not exceed 0.017 (0,43) each side.
E. Reference JEDEC MS–012 variation AC.

W (R–GDFP–F16) CERAMIC DUAL FLATPACK

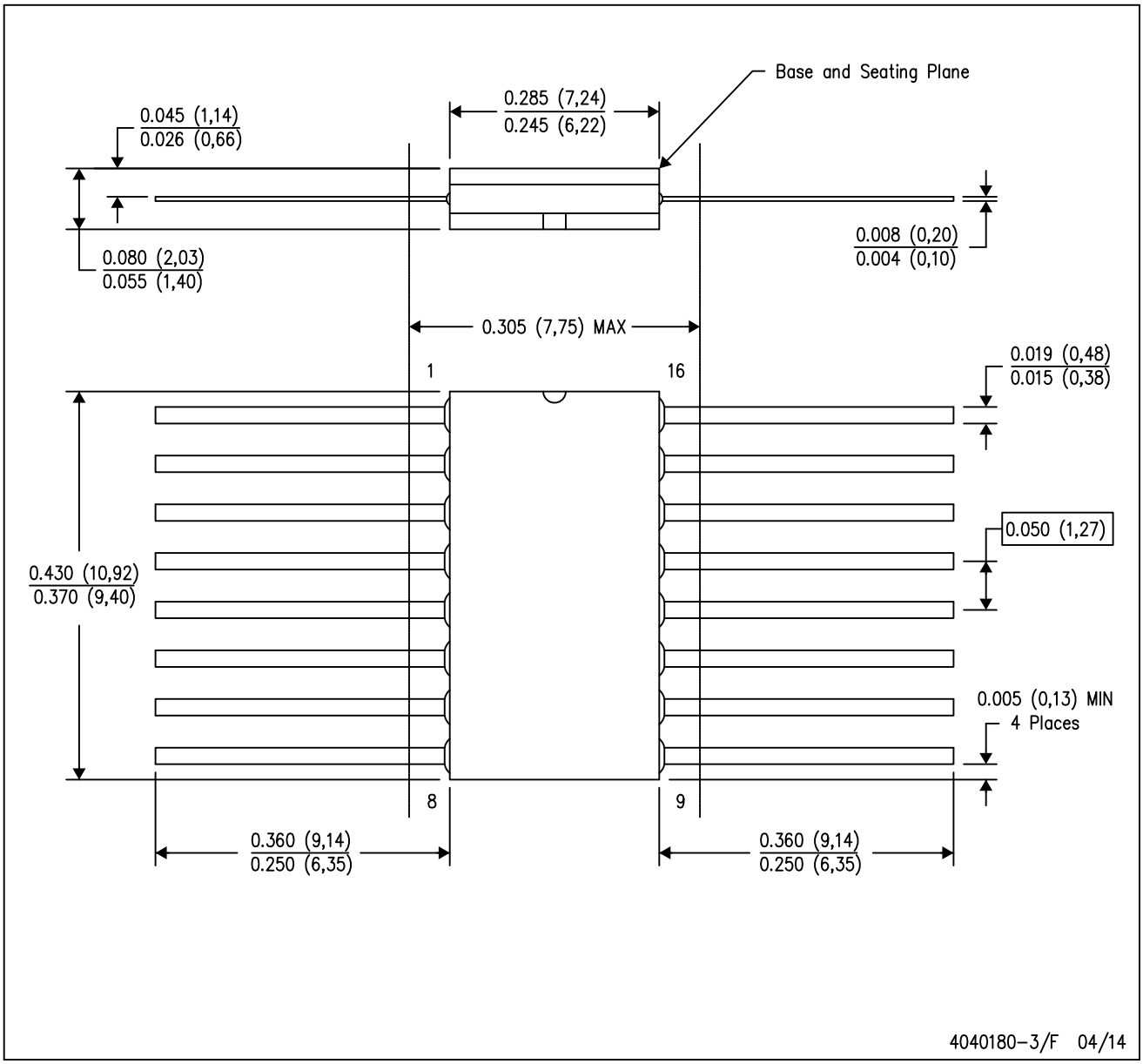

NOTES:
A. All linear dimensions are in inches (millimeters).
B. This drawing is subject to change without notice.
C. This package can be hermetically sealed with a ceramic lid using glass frit.
D. Index point is provided on cap for terminal identification only.
E. Falls within MIL STD 1835 GDFP2–F16

GENERIC PACKAGE VIEW

FK 20

LCCC - 2.03 mm max height

8.89 x 8.89, 1.27 mm pitch

LEADLESS CERAMIC CHIP CARRIER

This image is a representation of the package family, actual package may vary.
Refer to the product data sheet for package details.

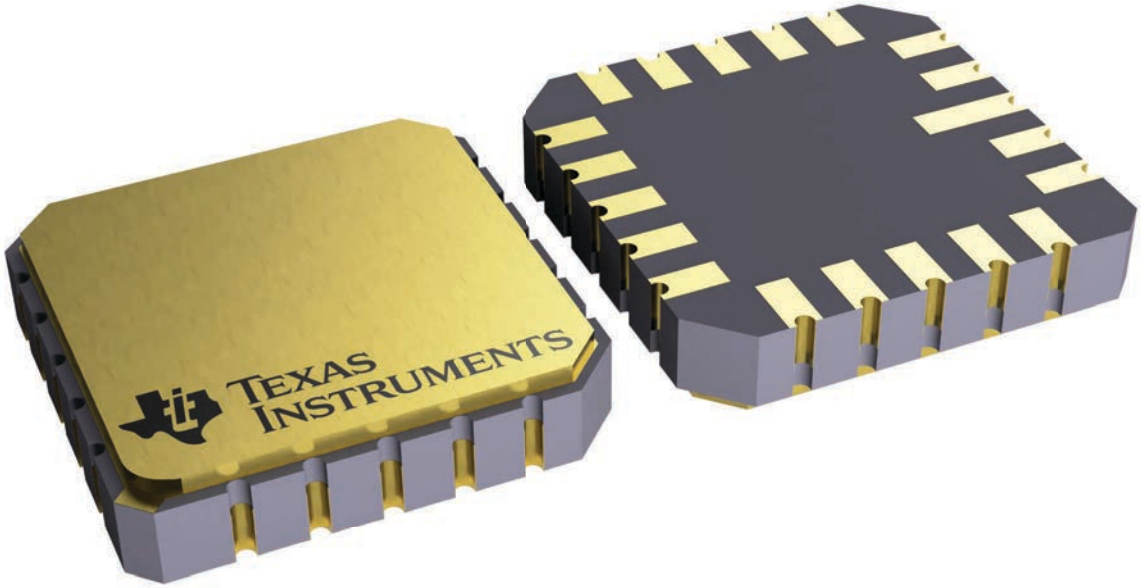

4229370VA\

J (R–GDIP–T**) CERAMIC DUAL IN–LINE PACKAGE

14 LEADS SHOWN

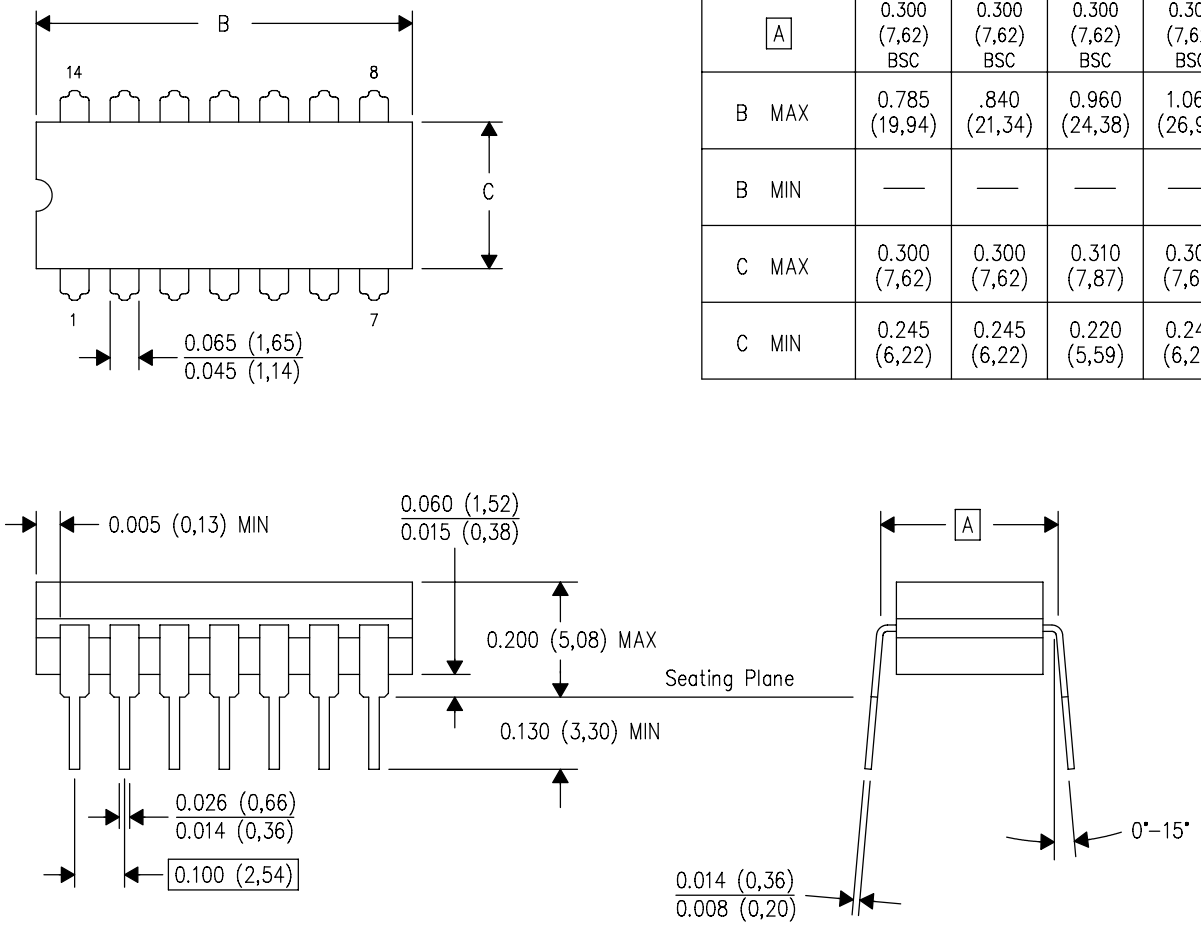

DIM \ PINS **	14	16	18	20
A	0.300 (7,62) BSC	0.300 (7,62) BSC	0.300 (7,62) BSC	0.300 (7,62) BSC
B MAX	0.785 (19,94)	.840 (21,34)	0.960 (24,38)	1.060 (26,92)
B MIN	—	—	—	—
C MAX	0.300 (7,62)	0.300 (7,62)	0.310 (7,87)	0.300 (7,62)
C MIN	0.245 (6,22)	0.245 (6,22)	0.220 (5,59)	0.245 (6,22)

4040083/F 03/03

NOTES:
- A. All linear dimensions are in inches (millimeters).
- B. This drawing is subject to change without notice.
- C. This package is hermetically sealed with a ceramic lid using glass frit.
- D. Index point is provided on cap for terminal identification only on press ceramic glass frit seal only.
- E. Falls within MIL STD 1835 GDIP1–T14, GDIP1–T16, GDIP1–T18 and GDIP1–T20.

N (R–PDIP–T**) PLASTIC DUAL–IN–LINE PACKAGE

16 PINS SHOWN

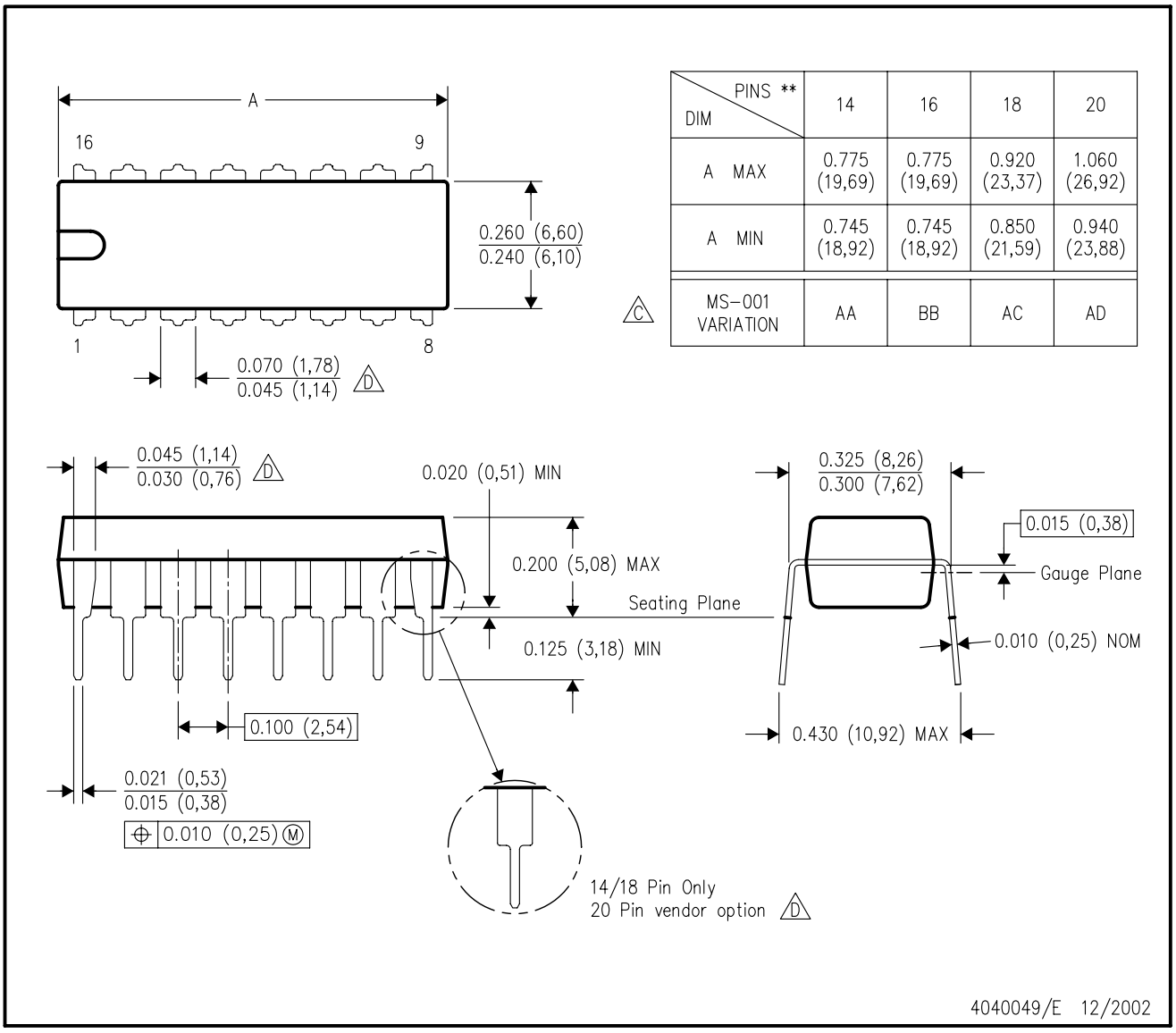

DIM \ PINS **	14	16	18	20
A MAX	0.775 (19,69)	0.775 (19,69)	0.920 (23,37)	1.060 (26,92)
A MIN	0.745 (18,92)	0.745 (18,92)	0.850 (21,59)	0.940 (23,88)
MS–001 VARIATION (C)	AA	BB	AC	AD

NOTES:
A. All linear dimensions are in inches (millimeters).
B. This drawing is subject to change without notice.
C. Falls within JEDEC MS–001, except 18 and 20 pin minimum body length (Dim A).
D. The 20 pin end lead shoulder width is a vendor option, either half or full width.

IMPORTANT NOTICE AND DISCLAIMER

TI PROVIDES TECHNICAL AND RELIABILITY DATA (INCLUDING DATASHEETS), DESIGN RESOURCES (INCLUDING REFERENCE DESIGNS), APPLICATION OR OTHER DESIGN ADVICE, WEB TOOLS, SAFETY INFORMATION, AND OTHER RESOURCES “AS IS” AND WITH ALL FAULTS, AND DISCLAIMS ALL WARRANTIES, EXPRESS AND IMPLIED, INCLUDING WITHOUT LIMITATION ANY IMPLIED WARRANTIES OF MERCHANTABILITY, FITNESS FOR A PARTICULAR PURPOSE OR NON-INFRINGEMENT OF THIRD PARTY INTELLECTUAL PROPERTY RIGHTS.

These resources are intended for skilled developers designing with TI products. You are solely responsible for (1) selecting the appropriate TI products for your application, (2) designing, validating and testing your application, and (3) ensuring your application meets applicable standards, and any other safety, security, regulatory or other requirements.

These resources are subject to change without notice. TI grants you permission to use these resources only for development of an application that uses the TI products described in the resource. Other reproduction and display of these resources is prohibited. No license is granted to any other TI intellectual property right or to any third party intellectual property right. TI disclaims responsibility for, and you fully indemnify TI and its representatives against any claims, damages, costs, losses, and liabilities arising out of your use of these resources.

TI’s products are provided subject to TI’s Terms of Sale, TI’s General Quality Guidelines, or other applicable terms available either on ti.com or provided in conjunction with such TI products. TI’s provision of these resources does not expand or otherwise alter TI’s applicable warranties or warranty disclaimers for TI products. Unless TI explicitly designates a product as custom or customer-specified, TI products are standard, catalog, general purpose devices.

TI objects to and rejects any additional or different terms you may propose.

Copyright © 2026, Texas Instruments Incorporated

Last updated 10/2025