- **'ALS174 and 'AS174 Contain Six Flip-Flops With Single-Rail Outputs**
- **'ALS175 and 'AS175B Contain Four Flip-Flops With Double-Rail Outputs**
- **Buffered Clock and Direct-Clear Inputs**
- **Applications Include:**
  - **Buffer/Storage Registers**
  - **Shift Registers**
  - **Pattern Generators**
- **Fully Buffered Outputs for Maximum Isolation From External Disturbances ('AS Only)**

SN54ALS174 . . . J OR W PACKAGE
SN54AS174 . . . J PACKAGE
SN74ALS174, SN74AS174 . . . D , N, OR NS PACKAGE
(TOP VIEW)

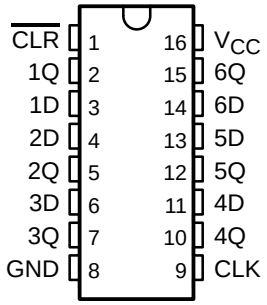

SN54ALS175 . . . J OR W PACKAGE
SN54AS175B . . . J PACKAGE
SN74ALS175, SN74AS175B . . . D, N, OR NS PACKAGE
(TOP VIEW)

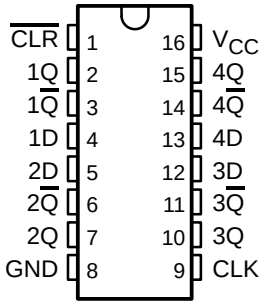

SN54ALS174, SN54AS174 . . . FK PACKAGE
(TOP VIEW)

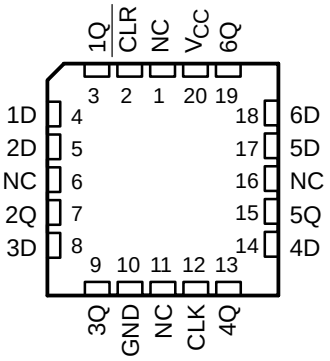

NC – No internal connection

SN54ALS175 . . . FK PACKAGE
(TOP VIEW)

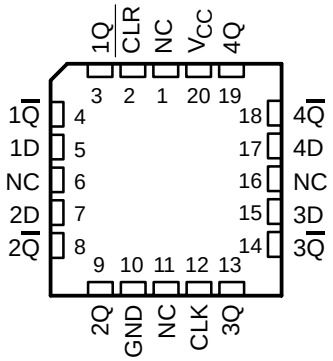

description

These positive-edge-triggered flip-flops utilize TTL circuitry to implement D-type flip-flop logic. All have a direct-clear ($\overline{CLR}$) input. The 'ALS175 and 'AS175B feature complementary outputs from each flip-flop.

Information at the data (D) inputs meeting the setup-time requirements is transferred to the outputs on the positive-going edge of the clock pulse. Clock triggering occurs at a particular voltage level and is not directly related to the transition time of the positive-going pulse. When the clock (CLK) input is at either the high or low level, the D-input signal has no effect at the output.

These circuits are fully compatible for use with most TTL circuits.

Please be aware that an important notice concerning availability, standard warranty, and use in critical applications of Texas Instruments semiconductor products and disclaimers thereto appears at the end of this data sheet.

PRODUCTION DATA information is current as of publication date. Products conform to specifications per the terms of Texas Instruments standard warranty. Production processing does not necessarily include testing of all parameters.

Copyright © 2002, Texas Instruments Incorporated

On products compliant to MIL-PRF-38535, all parameters are tested unless otherwise noted. On all other products, production processing does not necessarily include testing of all parameters.

ORDERING INFORMATION

T_A	PACKAGE†		ORDERABLE PART NUMBER	TOP-SIDE MARKING
0°C to 70°C	PDIP – N	Tube	SN74ALS174N	SN74ALS174N
			SN74AS174N	SN74AS174N
			SN74ALS175N	SN74ALS175N
			SN74AS175BN	SN74AS175BN
	SOIC – D	Tube	SN74ALS174D	ALS174
		Tape and reel	SN74ALS174DR	
		Tube	SN74AS174D	AS174
		Tape and reel	SN74AS174DR	
		Tube	SN74ALS175D	ALS175
		Tape and reel	SN74ALS175DR	
		Tube	SN74AS175BD	AS175B
		Tape and reel	SN74AS175BDR	
	SOP – NS	Tape and reel	SN74ALS174NSR	ALS174
			SN74AS174NSR	74AS174
			SN74ALS175NSR	ALS175
			SN74AS175BNSR	74AS175B
–55°C to 125°C	CDIP – J	Tube	SNJ54ALS174J	SNJ54ALS174J
			SNJ54AS174J	SNJ54AS174J
			SNJ54ALS175J	SNJ54ALS175J
			SNJ54AS175BJ	SNJ54AS175BJ
	CFP – W	Tube	SNJ54ALS174W	SNJ54ALS174W
			SNJ54ALS175W	SNJ54ALS175W
	LCCC – FK	Tube	SNJ54ALS174FK	SNJ54ALS174FK
			SNJ54AS174FK‡	SNJ54AS174FK
			SNJ54ALS175FK	SNJ54ALS175FK

† Package drawings, standard packing quantities, thermal data, symbolization, and PCB design guidelines are available at www.ti.com/sc/package.
‡ This orderable is not recommended for new designs.

FUNCTION TABLE
(each flip-flop)

INPUTS			OUTPUTS	
$\overline{CLR}$	CLK	D	Q	$\overline{Q}$§
L	X	X	L	H
H	↑	H	H	L
H	↑	L	L	H
H	L	X	Q_0	$\overline{Q}_0$

§ 'ALS175 and 'AS175B only

logic diagrams (positive logic)

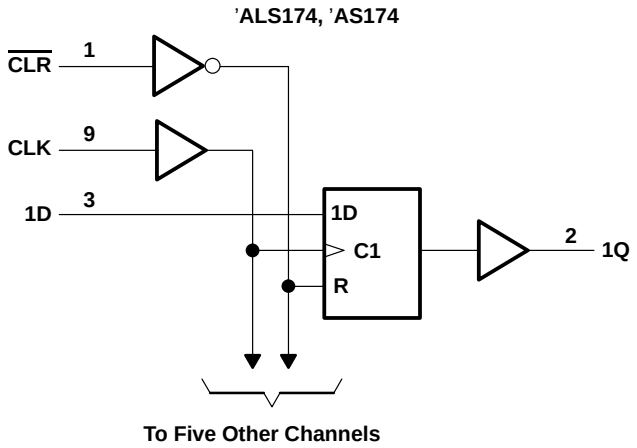

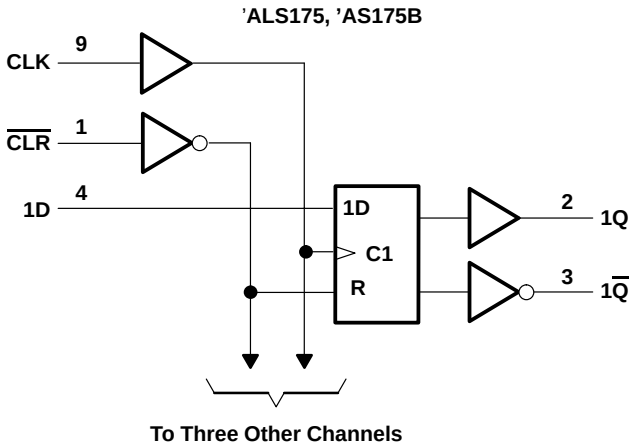

Pin numbers shown are for the D, J, N, NS, and W packages.

absolute maximum ratings over operating free-air temperature range, SN54/74ALS174, SN54/74ALS175 (unless otherwise noted)†

Supply voltage, V_{CC} . . . . . 7 V
Input voltage, V_I . . . . . 7 V
Package thermal impedance, θ_{JA} (see Note 1): D package . . . . . 73°C/W
N package . . . . . 67°C/W
NS package . . . . . 64°C/W
Storage temperature range, T_{stg} . . . . . –65°C to 150°C

† Stresses beyond those listed under "absolute maximum ratings" may cause permanent damage to the device. These are stress ratings only, and functional operation of the device at these or any other conditions beyond those indicated under "recommended operating conditions" is not implied. Exposure to absolute-maximum-rated conditions for extended periods may affect device reliability.

NOTE 1: The package thermal impedance is calculated in accordance with JESD 51-7.

recommended operating conditions (see Note 2)

		SN54ALS174 SN54ALS175			SN74ALS174 SN74ALS175			UNIT
		MIN	NOM	MAX	MIN	NOM	MAX	
V_{CC}	Supply voltage	4.5	5	5.5	4.5	5	5.5	V
V_{IH}	High-level input voltage	2			2			V
V_{IL}	Low-level input voltage			0.8			0.8	V
I_{OH}	High-level output current			–0.4			–0.4	mA
I_{OL}	Low-level output current			4			8	mA
T_A	Operating free-air temperature	–55		125	0		70	°C

NOTE 2: All unused inputs of the device must be held at V_{CC} or GND to ensure proper device operation. Refer to the TI application report, *Implications of Slow or Floating CMOS Inputs*, literature number SCBA004.

electrical characteristics over recommended operating free-air temperature range (unless otherwise noted)

PARAMETER		TEST CONDITIONS		SN54ALS174 SN54ALS175			SN74ALS174 SN74ALS175			UNIT
				MIN	TYP†	MAX	MIN	TYP†	MAX	
V_{IK}		V_{CC} = 4.5 V,	I_I = –18 mA			–1.5			–1.5	V
V_{OH}		V_{CC} = 4.5 V to 5.5 V,	I_{OH} = –0.4 mA	V_{CC}–2			V_{CC}–2			V
V_{OL}		V_{CC} = 4.5 V	I_{OL} = 4 mA		0.25	0.4		0.25	0.4	V
			I_{OL} = 8 mA					0.35	0.5	
I_I		V_{CC} = 5.5 V,	V_I = 7 V			0.1			0.1	mA
I_{IH}		V_{CC} = 5.5 V,	V_I = 2.7 V			20			20	µA
I_{IL}	All others	V_{CC} = 5.5 V,	V_I = 0.4 V			–0.1			–0.1	mA
	CLK					–0.15				
I_O‡		V_{CC} = 5.5 V,	V_O = 2.25 V	–20		–112	–30		–112	mA
I_{CC}	’ALS174	V_{CC} = 5.5 V,	See Note 3		11	19		11	19	mA
	’ALS175				8	14		9	14	

† All typical values are at V_{CC} = 5 V, T_A = 25°C.
‡ The output conditions have been chosen to produce a current that closely approximates one-half of the true short-circuit output current, I_{OS}.
NOTE 3: I_{CC} is measured with D inputs and $\overline{CLR}$ grounded, and CLK at 4.5 V.

timing requirements over recommended operating free-air temperature range (unless otherwise noted)

			SN54ALS174 SN54ALS175		SN74ALS174 SN74ALS175		UNIT
			MIN	MAX	MIN	MAX	
f_{clock}	Clock frequency			40		50	MHz
t_w	Pulse duration	$\overline{CLR}$ low	15		10		ns
		CLK high	12.5		10		
		CLK low	12.5		10		
t_{su}	Setup time before CLK↑	Data	15		10		ns
		$\overline{CLR}$ inactive	8		6		
t_h	Hold time, data after CLK↑		0		0		ns

switching characteristics (see Figure 1)

PARAMETER	FROM (INPUT)	TO (OUTPUT)	V_{CC} = 4.5 V to 5.5 V, C_L = 50 pF, R_L = 500 Ω, T_A = MIN to MAX§				UNIT
			SN54ALS174 SN54ALS175		SN74ALS174 SN74ALS175		
			MIN	MAX	MIN	MAX	
f_{max}			40		50		MHz
t_{PLH}	$\overline{CLR}$	Any Q (or $\overline{Q}$, ’ALS175)	3	20	5	18	ns
t_{PHL}			5	30	8	23	
t_{PLH}	CLK	Any Q (or $\overline{Q}$, ’ALS175)	3	20	3	15	ns
t_{PHL}			5	24	5	17	

§ For conditions shown as MIN or MAX, use the appropriate value specified under recommended operating conditions.

absolute maximum ratings over operating free-air temperature range, SN54/74AS174, SN54/74AS175B (unless otherwise noted)†

Supply voltage, V_{CC} . . . . . 7 V
Input voltage, V_I . . . . . 7 V
Package thermal impedance, θ_{JA} (see Note 1): D package . . . . . 73°C/W
N package . . . . . 67°C/W
NS package . . . . . 64°C/W
Storage temperature range, T_{stg} . . . . . –65°C to 150°C

† Stresses beyond those listed under "absolute maximum ratings" may cause permanent damage to the device. These are stress ratings only, and functional operation of the device at these or any other conditions beyond those indicated under "recommended operating conditions" is not implied. Exposure to absolute-maximum-rated conditions for extended periods may affect device reliability.
NOTE 1: The package thermal impedance is calculated in accordance with JESD 51-7.

recommended operating conditions (see Note 2)

		SN54AS174 SN54AS175B			SN74AS174 SN74AS175B			UNIT
		MIN	NOM	MAX	MIN	NOM	MAX	
V_{CC}	Supply voltage	4.5	5	5.5	4.5	5	5.5	V
V_{IH}	High-level input voltage	2			2			V
V_{IL}	Low-level input voltage			0.8			0.8	V
I_{OH}	High-level output current			–2			–2	mA
I_{OL}	Low-level output current			20			20	mA
T_A	Operating free-air temperature	–55		125	0		70	°C

NOTE 2: All unused inputs of the device must be held at V_{CC} or GND to ensure proper device operation. Refer to the TI application report, *Implications of Slow or Floating CMOS Inputs*, literature number SCBA004.

electrical characteristics over recommended operating free-air temperature range (unless otherwise noted)

PARAMETER		TEST CONDITIONS		SN54AS174 SN54AS175B			SN74AS174 SN74AS175B			UNIT
				MIN	TYP‡	MAX	MIN	TYP‡	MAX	
V_{IK}		V_{CC} = 4.5 V,	I_I = –18 mA			–1.2			–1.2	V
V_{OH}		V_{CC} = 4.5 V to 5.5 V,	I_{OH} = –2 mA	V_{CC}–2			V_{CC}–2			V
V_{OL}		V_{CC} = 4.5 V,	I_{OL} = 20 mA		0.35	0.5		0.35	0.5	V
I_I		V_{CC} = 5.5 V,	V_I = 7 V			0.1			0.1	mA
I_{IH}		V_{CC} = 5.5 V,	V_I = 2.7 V			20			20	µA
I_{IL}		V_{CC} = 5.5 V,	V_I = 0.4 V			–0.5			–0.5	mA
I_O§		V_{CC} = 5.5 V,	V_O = 2.25 V	–30		–112	–30		–112	mA
I_{CC}	'AS174	V_{CC} = 5.5 V,	See Note 4		30	45		30	45	mA
	'AS175B				22.5	34		22.5	34	

‡ All typical values are at V_{CC} = 5 V, T_A = 25°C.
§ The output conditions have been chosen to produce a current that closely approximates one-half of the true short-circuit output current, I_{OS}.
NOTE 4: I_{CC} is measured with D inputs, $\overline{CLR}$, and CLK grounded.

timing requirements over recommended operating free-air temperature range (unless otherwise noted)

				SN54AS174 SN54AS175B		SN74AS174 SN74AS175B		UNIT
				MIN	MAX	MIN	MAX	
f_{clock}*	Clock frequency				100		100	MHz
t_w*	Pulse duration	$\overline{CLR}$ low		5.5		5		ns
		CLK high		4		4		
		CLK low	'AS174	6		6		
		CLK low	'AS175B	5		5		
t_{su}*	Setup time before CLK↑	Data	'AS174	4		4		ns
			'AS175B	3		3		
		$\overline{CLR}$ inactive		6		6		
t_h*	Hold time, data after CLK↑			1		1		ns

* On products compliant to MIL-STD-883, Class B, this parameter is based on characterization data, but is not production tested.

switching characteristics (see Figure 1)

PARAMETER	FROM (INPUT)	TO (OUTPUT)	V_{CC} = 4.5 V to 5.5 V, C_L = 50 pF, R_L = 500 Ω, T_A = MIN to MAX†				UNIT
			SN54AS174		SN74AS174		
			MIN	MAX	MIN	MAX	
f_{max}*			100		100		MHz
t_{PHL}	$\overline{CLR}$	Any Q	5	15	5	14	ns
t_{PLH}	CLK	Any Q	3.5	9.5	3.5	8	ns
t_{PHL}			4.5	11.5	4.5	10	

* On products compliant to MIL-STD-883, Class B, this parameter is based on characterization data, but is not production tested.
† For conditions shown as MIN or MAX, use the appropriate value specified under recommended operating conditions.

switching characteristics (see Figure 1)

PARAMETER	FROM (INPUT)	TO (OUTPUT)	V_{CC} = 4.5 V to 5.5 V, C_L = 50 pF, R_L = 500 Ω, T_A = MIN to MAX†				UNIT
			SN54AS175B		SN74AS175B		
			MIN	MAX	MIN	MAX	
f_{max}*			100		100		MHz
t_{PLH}	$\overline{CLR}$	Any Q or $\overline{Q}$	4	10	4	9	ns
t_{PHL}			4.5	15	4.5	13	
t_{PLH}	CLK	Any Q or $\overline{Q}$	3	8.5	3	7.5	ns
t_{PHL}			3	11	3	10	

* On products compliant to MIL-STD-883, Class B, this parameter is based on characterization data, but is not production tested.
† For conditions shown as MIN or MAX, use the appropriate value specified under recommended operating conditions.

PARAMETER MEASUREMENT INFORMATION
SERIES 54ALS/74ALS AND 54AS/74AS DEVICES

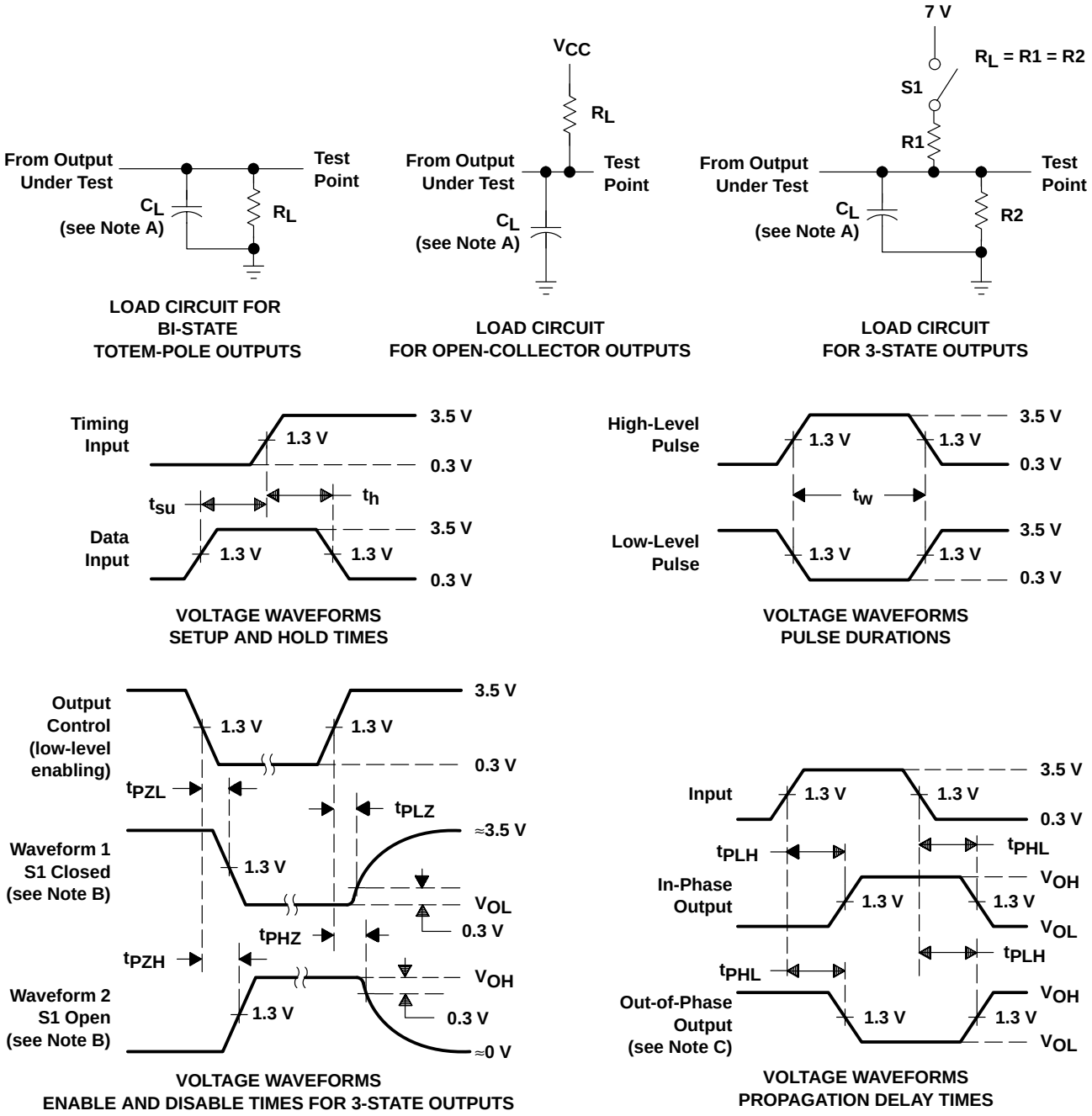

NOTES: A. C_L includes probe and jig capacitance.
B. Waveform 1 is for an output with internal conditions such that the output is low except when disabled by the output control. Waveform 2 is for an output with internal conditions such that the output is high except when disabled by the output control.
C. When measuring propagation delay items of 3-state outputs, switch S1 is open.
D. All input pulses have the following characteristics: PRR ≤ 1 MHz, $t_r = t_f = 2$ ns, duty cycle = 50%.
E. The outputs are measured one at a time with one transition per measurement.

Figure 1. Load Circuits and Voltage Waveforms

PACKAGING INFORMATION

Orderable part number	Status (1)	Material type (2)	Package | Pins	Package qty | Carrier	RoHS (3)	Lead finish/ Ball material (4)	MSL rating/ Peak reflow (5)	Op temp (°C)	Part marking (6)
5962-9553701QEA	Active	Production	CDIP (J) | 16	25 | TUBE	No	SNPB	N/A for Pkg Type	-55 to 125	5962-9553701QE A SNJ54AS175BJ
83019012A	Active	Production	LCCC (FK) | 20	55 | TUBE	No	SNPB	N/A for Pkg Type	-55 to 125	83019012A SNJ54ALS 174FK
8301901EA	Active	Production	CDIP (J) | 16	25 | TUBE	No	SNPB	N/A for Pkg Type	-55 to 125	8301901EA SNJ54ALS174J
8301901FA	Active	Production	CFP (W) | 16	25 | TUBE	No	SNPB	N/A for Pkg Type	-55 to 125	8301901FA SNJ54ALS174W
8301902EA	Active	Production	CDIP (J) | 16	25 | TUBE	No	SNPB	N/A for Pkg Type	-55 to 125	8301902EA SNJ54ALS175J
JM38510/37201B2A	Active	Production	LCCC (FK) | 20	55 | TUBE	No	SNPB	N/A for Pkg Type	-55 to 125	JM38510/ 37201B2A
JM38510/37201B2A.A	Active	Production	LCCC (FK) | 20	55 | TUBE	No	SNPB	N/A for Pkg Type	-55 to 125	JM38510/ 37201B2A
JM38510/37201BEA	Active	Production	CDIP (J) | 16	25 | TUBE	No	SNPB	N/A for Pkg Type	-55 to 125	JM38510/ 37201BEA
JM38510/37201BEA.A	Active	Production	CDIP (J) | 16	25 | TUBE	No	SNPB	N/A for Pkg Type	-55 to 125	JM38510/ 37201BEA
JM38510/37202B2A	Active	Production	LCCC (FK) | 20	55 | TUBE	No	SNPB	N/A for Pkg Type	-55 to 125	JM38510/ 37202B2A
JM38510/37202B2A.A	Active	Production	LCCC (FK) | 20	55 | TUBE	No	SNPB	N/A for Pkg Type	-55 to 125	JM38510/ 37202B2A
JM38510/37202BEA	Active	Production	CDIP (J) | 16	25 | TUBE	No	SNPB	N/A for Pkg Type	-55 to 125	JM38510/ 37202BEA
JM38510/37202BEA.A	Active	Production	CDIP (J) | 16	25 | TUBE	No	SNPB	N/A for Pkg Type	-55 to 125	JM38510/ 37202BEA
M38510/37201B2A	Active	Production	LCCC (FK) | 20	55 | TUBE	No	SNPB	N/A for Pkg Type	-55 to 125	JM38510/ 37201B2A
M38510/37201BEA	Active	Production	CDIP (J) | 16	25 | TUBE	No	SNPB	N/A for Pkg Type	-55 to 125	JM38510/ 37201BEA
M38510/37202B2A	Active	Production	LCCC (FK) | 20	55 | TUBE	No	SNPB	N/A for Pkg Type	-55 to 125	JM38510/ 37202B2A

Orderable part number	Status (1)	Material type (2)	Package | Pins	Package qty | Carrier	RoHS (3)	Lead finish/ Ball material (4)	MSL rating/ Peak reflow (5)	Op temp (°C)	Part marking (6)
M38510/37202BEA	Active	Production	CDIP (J) | 16	25 | TUBE	No	SNPB	N/A for Pkg Type	-55 to 125	JM38510/ 37202BEA
SN54ALS174J	Active	Production	CDIP (J) | 16	25 | TUBE	No	SNPB	N/A for Pkg Type	-55 to 125	SN54ALS174J
SN54ALS174J.A	Active	Production	CDIP (J) | 16	25 | TUBE	No	SNPB	N/A for Pkg Type	-55 to 125	SN54ALS174J
SN54ALS175J	Active	Production	CDIP (J) | 16	25 | TUBE	No	SNPB	N/A for Pkg Type	-55 to 125	SN54ALS175J
SN54ALS175J.A	Active	Production	CDIP (J) | 16	25 | TUBE	No	SNPB	N/A for Pkg Type	-55 to 125	SN54ALS175J
SN74ALS174D	Obsolete	Production	SOIC (D) | 16	-	-	Call TI	Call TI	0 to 70	ALS174
SN74ALS174DR	Last Time Buy	Production	SOIC (D) | 16	2500 | LARGE T&R	Yes	NIPDAU	Level-1-260C-UNLIM	0 to 70	ALS174
SN74ALS174DR.A	Last Time Buy	Production	SOIC (D) | 16	2500 | LARGE T&R	Yes	NIPDAU	Level-1-260C-UNLIM	0 to 70	ALS174
SN74ALS174N	Active	Production	PDIP (N) | 16	25 | TUBE	Yes	NIPDAU	N/A for Pkg Type	0 to 70	SN74ALS174N
SN74ALS174N.A	Active	Production	PDIP (N) | 16	25 | TUBE	Yes	NIPDAU	N/A for Pkg Type	0 to 70	SN74ALS174N
SN74ALS174NSR	Last Time Buy	Production	SOP (NS) | 16	2000 | LARGE T&R	Yes	NIPDAU	Level-1-260C-UNLIM	0 to 70	ALS174
SN74ALS174NSR.A	Last Time Buy	Production	SOP (NS) | 16	2000 | LARGE T&R	Yes	NIPDAU	Level-1-260C-UNLIM	0 to 70	ALS174
SN74ALS175D	Obsolete	Production	SOIC (D) | 16	-	-	Call TI	Call TI	0 to 70	ALS175
SN74ALS175DR	Active	Production	SOIC (D) | 16	2500 | LARGE T&R	Yes	NIPDAU	Level-1-260C-UNLIM	0 to 70	ALS175
SN74ALS175DR.A	Active	Production	SOIC (D) | 16	2500 | LARGE T&R	Yes	NIPDAU	Level-1-260C-UNLIM	0 to 70	ALS175
SN74ALS175N	Active	Production	PDIP (N) | 16	25 | TUBE	Yes	NIPDAU	N/A for Pkg Type	0 to 70	SN74ALS175N
SN74ALS175N.A	Active	Production	PDIP (N) | 16	25 | TUBE	Yes	NIPDAU	N/A for Pkg Type	0 to 70	SN74ALS175N
SN74ALS175NSR	Active	Production	SOP (NS) | 16	2000 | LARGE T&R	Yes	NIPDAU	Level-1-260C-UNLIM	0 to 70	ALS175
SN74ALS175NSR.A	Active	Production	SOP (NS) | 16	2000 | LARGE T&R	Yes	NIPDAU	Level-1-260C-UNLIM	0 to 70	ALS175
SN74AS174D	Active	Production	SOIC (D) | 16	40 | TUBE	Yes	NIPDAU	Level-2-260C-1 YEAR	0 to 70	AS174
SN74AS174D.A	Active	Production	SOIC (D) | 16	40 | TUBE	Yes	NIPDAU	Level-2-260C-1 YEAR	0 to 70	AS174
SN74AS174N	Active	Production	PDIP (N) | 16	25 | TUBE	Yes	NIPDAU	N/A for Pkg Type	0 to 70	SN74AS174N
SN74AS174N.A	Active	Production	PDIP (N) | 16	25 | TUBE	Yes	NIPDAU	N/A for Pkg Type	0 to 70	SN74AS174N
SN74AS174NSR	Active	Production	SOP (NS) | 16	2000 | LARGE T&R	Yes	NIPDAU	Level-1-260C-UNLIM	0 to 70	74AS174
SN74AS174NSR.A	Active	Production	SOP (NS) | 16	2000 | LARGE T&R	Yes	NIPDAU	Level-1-260C-UNLIM	0 to 70	74AS174
SN74AS175BD	Active	Production	SOIC (D) | 16	40 | TUBE	Yes	NIPDAU	Level-1-260C-UNLIM	0 to 70	AS175B
SN74AS175BD.A	Active	Production	SOIC (D) | 16	40 | TUBE	Yes	NIPDAU	Level-1-260C-UNLIM	0 to 70	AS175B

Orderable part number	Status (1)	Material type (2)	Package | Pins	Package qty | Carrier	RoHS (3)	Lead finish/ Ball material (4)	MSL rating/ Peak reflow (5)	Op temp (°C)	Part marking (6)
SN74AS175BN	Active	Production	PDIP (N) | 16	25 | TUBE	Yes	NIPDAU	N/A for Pkg Type	0 to 70	SN74AS175BN
SN74AS175BN.A	Active	Production	PDIP (N) | 16	25 | TUBE	Yes	NIPDAU	N/A for Pkg Type	0 to 70	SN74AS175BN
SN74AS175BNSR	Active	Production	SOP (NS) | 16	2000 | LARGE T&R	Yes	NIPDAU	Level-1-260C-UNLIM	0 to 70	74AS175B
SN74AS175BNSR.A	Active	Production	SOP (NS) | 16	2000 | LARGE T&R	Yes	NIPDAU	Level-1-260C-UNLIM	0 to 70	74AS175B
SNJ54ALS174FK	Active	Production	LCCC (FK) | 20	55 | TUBE	No	SNPB	N/A for Pkg Type	-55 to 125	83019012A SNJ54ALS 174FK
SNJ54ALS174FK.A	Active	Production	LCCC (FK) | 20	55 | TUBE	No	SNPB	N/A for Pkg Type	-55 to 125	83019012A SNJ54ALS 174FK
SNJ54ALS174J	Active	Production	CDIP (J) | 16	25 | TUBE	No	SNPB	N/A for Pkg Type	-55 to 125	8301901EA SNJ54ALS174J
SNJ54ALS174J.A	Active	Production	CDIP (J) | 16	25 | TUBE	No	SNPB	N/A for Pkg Type	-55 to 125	8301901EA SNJ54ALS174J
SNJ54ALS174W	Active	Production	CFP (W) | 16	25 | TUBE	No	SNPB	N/A for Pkg Type	-55 to 125	8301901FA SNJ54ALS174W
SNJ54ALS174W.A	Active	Production	CFP (W) | 16	25 | TUBE	No	SNPB	N/A for Pkg Type	-55 to 125	8301901FA SNJ54ALS174W
SNJ54ALS175J	Active	Production	CDIP (J) | 16	25 | TUBE	No	SNPB	N/A for Pkg Type	-55 to 125	8301902EA SNJ54ALS175J
SNJ54ALS175J.A	Active	Production	CDIP (J) | 16	25 | TUBE	No	SNPB	N/A for Pkg Type	-55 to 125	8301902EA SNJ54ALS175J
SNJ54AS174J	Active	Production	CDIP (J) | 16	25 | TUBE	No	SNPB	N/A for Pkg Type	-55 to 125	SNJ54AS174J
SNJ54AS174J.A	Active	Production	CDIP (J) | 16	25 | TUBE	No	SNPB	N/A for Pkg Type	-55 to 125	SNJ54AS174J
SNJ54AS175BJ	Active	Production	CDIP (J) | 16	25 | TUBE	No	SNPB	N/A for Pkg Type	-55 to 125	5962-9553701QE A SNJ54AS175BJ
SNJ54AS175BJ.A	Active	Production	CDIP (J) | 16	25 | TUBE	No	SNPB	N/A for Pkg Type	-55 to 125	5962-9553701QE A SNJ54AS175BJ

(1) **Status:** For more details on status, see our product life cycle.

(2) **Material type:** When designated, preproduction parts are prototypes/experimental devices, and are not yet approved or released for full production. Testing and final process, including without limitation quality assurance, reliability performance testing, and/or process qualification, may not yet be complete, and this item is subject to further changes or possible discontinuation. If available for ordering, purchases will be subject to an additional waiver at checkout, and are intended for early internal evaluation purposes only. These items are sold without warranties of any kind.

(3) **RoHS values:** Yes, No, RoHS Exempt. See the TI RoHS Statement for additional information and value definition.

(4) **Lead finish/Ball material:** Parts may have multiple material finish options. Finish options are separated by a vertical ruled line. Lead finish/Ball material values may wrap to two lines if the finish value exceeds the maximum column width.

(5) **MSL rating/Peak reflow:** The moisture sensitivity level ratings and peak solder (reflow) temperatures. In the event that a part has multiple moisture sensitivity ratings, only the lowest level per JEDEC standards is shown. Refer to the shipping label for the actual reflow temperature that will be used to mount the part to the printed circuit board.

(6) **Part marking:** There may be an additional marking, which relates to the logo, the lot trace code information, or the environmental category of the part.

Multiple part markings will be inside parentheses. Only one part marking contained in parentheses and separated by a "~" will appear on a part. If a line is indented then it is a continuation of the previous line and the two combined represent the entire part marking for that device.

Important Information and Disclaimer: The information provided on this page represents TI's knowledge and belief as of the date that it is provided. TI bases its knowledge and belief on information provided by third parties, and makes no representation or warranty as to the accuracy of such information. Efforts are underway to better integrate information from third parties. TI has taken and continues to take reasonable steps to provide representative and accurate information but may not have conducted destructive testing or chemical analysis on incoming materials and chemicals. TI and TI suppliers consider certain information to be proprietary, and thus CAS numbers and other limited information may not be available for release.

In no event shall TI's liability arising out of such information exceed the total purchase price of the TI part(s) at issue in this document sold by TI to Customer on an annual basis.

OTHER QUALIFIED VERSIONS OF SN54ALS174, SN54ALS175, SN54AS174, SN54AS175B, SN74ALS174, SN74ALS175, SN74AS174, SN74AS175B :

- Catalog : SN74ALS174, SN74ALS175, SN74AS174, SN74AS175B
- Military : SN54ALS174, SN54ALS175, SN54AS174, SN54AS175B

NOTE: Qualified Version Definitions:

- Catalog - TI's standard catalog product
- Military - QML certified for Military and Defense Applications

TAPE AND REEL INFORMATION

REEL DIMENSIONS

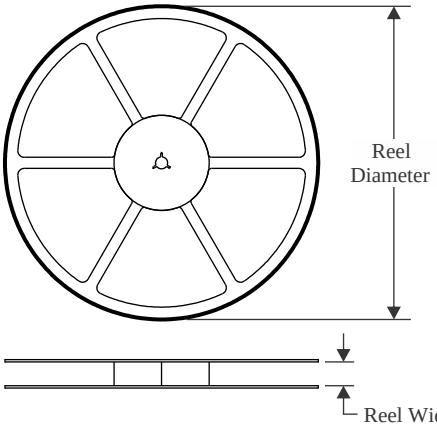

TAPE DIMENSIONS

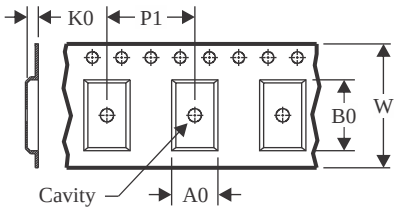

A0	Dimension designed to accommodate the component width
B0	Dimension designed to accommodate the component length
K0	Dimension designed to accommodate the component thickness
W	Overall width of the carrier tape
P1	Pitch between successive cavity centers

QUADRANT ASSIGNMENTS FOR PIN 1 ORIENTATION IN TAPE

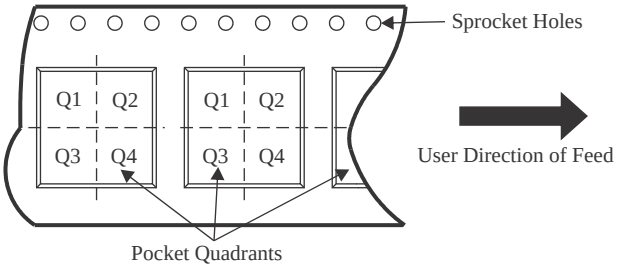

*All dimensions are nominal

Device	Package Type	Package Drawing	Pins	SPQ	Reel Diameter (mm)	Reel Width W1 (mm)	A0 (mm)	B0 (mm)	K0 (mm)	P1 (mm)	W (mm)	Pin1 Quadrant
SN74ALS174DR	SOIC	D	16	2500	330.0	16.4	6.5	10.3	2.1	8.0	16.0	Q1
SN74ALS174NSR	SOP	NS	16	2000	330.0	16.4	8.1	10.4	2.5	12.0	16.0	Q1
SN74ALS175DR	SOIC	D	16	2500	330.0	16.4	6.5	10.3	2.1	8.0	16.0	Q1
SN74ALS175NSR	SOP	NS	16	2000	330.0	16.4	8.1	10.4	2.5	12.0	16.0	Q1
SN74AS174NSR	SOP	NS	16	2000	330.0	16.4	8.1	10.4	2.5	12.0	16.0	Q1
SN74AS175BNSR	SOP	NS	16	2000	330.0	16.4	8.1	10.4	2.5	12.0	16.0	Q1

TAPE AND REEL BOX DIMENSIONS

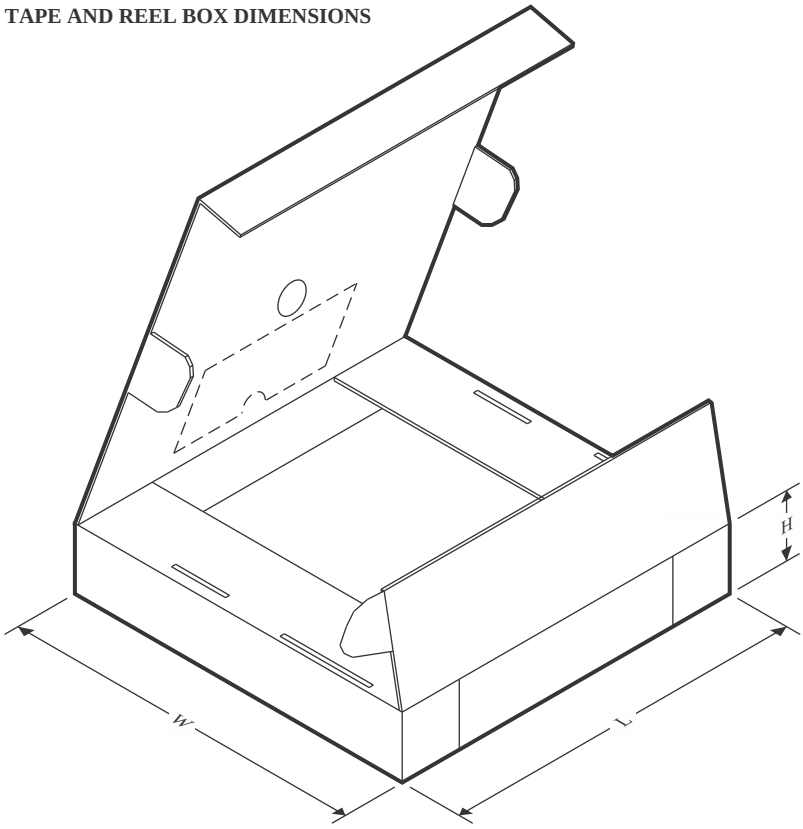

*All dimensions are nominal

Device	Package Type	Package Drawing	Pins	SPQ	Length (mm)	Width (mm)	Height (mm)
SN74ALS174DR	SOIC	D	16	2500	353.0	353.0	32.0
SN74ALS174NSR	SOP	NS	16	2000	353.0	353.0	32.0
SN74ALS175DR	SOIC	D	16	2500	353.0	353.0	32.0
SN74ALS175NSR	SOP	NS	16	2000	353.0	353.0	32.0
SN74AS174NSR	SOP	NS	16	2000	353.0	353.0	32.0
SN74AS175BNSR	SOP	NS	16	2000	353.0	353.0	32.0

TUBE

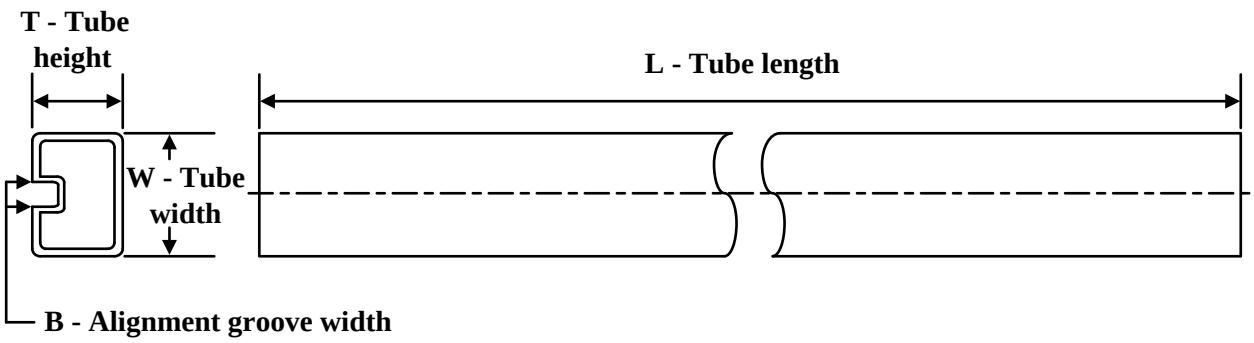

*All dimensions are nominal

Device	Package Name	Package Type	Pins	SPQ	L (mm)	W (mm)	T (µm)	B (mm)
83019012A	FK	LCCC	20	55	506.98	12.06	2030	NA
8301901FA	W	CFP	16	25	506.98	26.16	6220	NA
JM38510/37201B2A	FK	LCCC	20	55	506.98	12.06	2030	NA
JM38510/37201B2A.A	FK	LCCC	20	55	506.98	12.06	2030	NA
JM38510/37202B2A	FK	LCCC	20	55	506.98	12.06	2030	NA
JM38510/37202B2A.A	FK	LCCC	20	55	506.98	12.06	2030	NA
M38510/37201B2A	FK	LCCC	20	55	506.98	12.06	2030	NA
M38510/37202B2A	FK	LCCC	20	55	506.98	12.06	2030	NA
SN74ALS174N	N	PDIP	16	25	506	13.97	11230	4.32
SN74ALS174N	N	PDIP	16	25	506	13.97	11230	4.32
SN74ALS174N.A	N	PDIP	16	25	506	13.97	11230	4.32
SN74ALS174N.A	N	PDIP	16	25	506	13.97	11230	4.32
SN74ALS175N	N	PDIP	16	25	506	13.97	11230	4.32
SN74ALS175N	N	PDIP	16	25	506	13.97	11230	4.32
SN74ALS175N.A	N	PDIP	16	25	506	13.97	11230	4.32
SN74ALS175N.A	N	PDIP	16	25	506	13.97	11230	4.32
SN74AS174D	D	SOIC	16	40	507	8	3940	4.32
SN74AS174D.A	D	SOIC	16	40	507	8	3940	4.32
SN74AS174N	N	PDIP	16	25	506	13.97	11230	4.32
SN74AS174N	N	PDIP	16	25	506	13.97	11230	4.32
SN74AS174N.A	N	PDIP	16	25	506	13.97	11230	4.32
SN74AS174N.A	N	PDIP	16	25	506	13.97	11230	4.32
SN74AS175BD	D	SOIC	16	40	507	8	3940	4.32
SN74AS175BD.A	D	SOIC	16	40	507	8	3940	4.32
SN74AS175BN	N	PDIP	16	25	506	13.97	11230	4.32
SN74AS175BN	N	PDIP	16	25	506	13.97	11230	4.32
SN74AS175BN.A	N	PDIP	16	25	506	13.97	11230	4.32
SN74AS175BN.A	N	PDIP	16	25	506	13.97	11230	4.32
SNJ54ALS174FK	FK	LCCC	20	55	506.98	12.06	2030	NA

Device	Package Name	Package Type	Pins	SPQ	L (mm)	W (mm)	T (µm)	B (mm)
SNJ54ALS174FK.A	FK	LCCC	20	55	506.98	12.06	2030	NA
SNJ54ALS174W	W	CFP	16	25	506.98	26.16	6220	NA
SNJ54ALS174W.A	W	CFP	16	25	506.98	26.16	6220	NA

W (R–GDFP–F16) CERAMIC DUAL FLATPACK

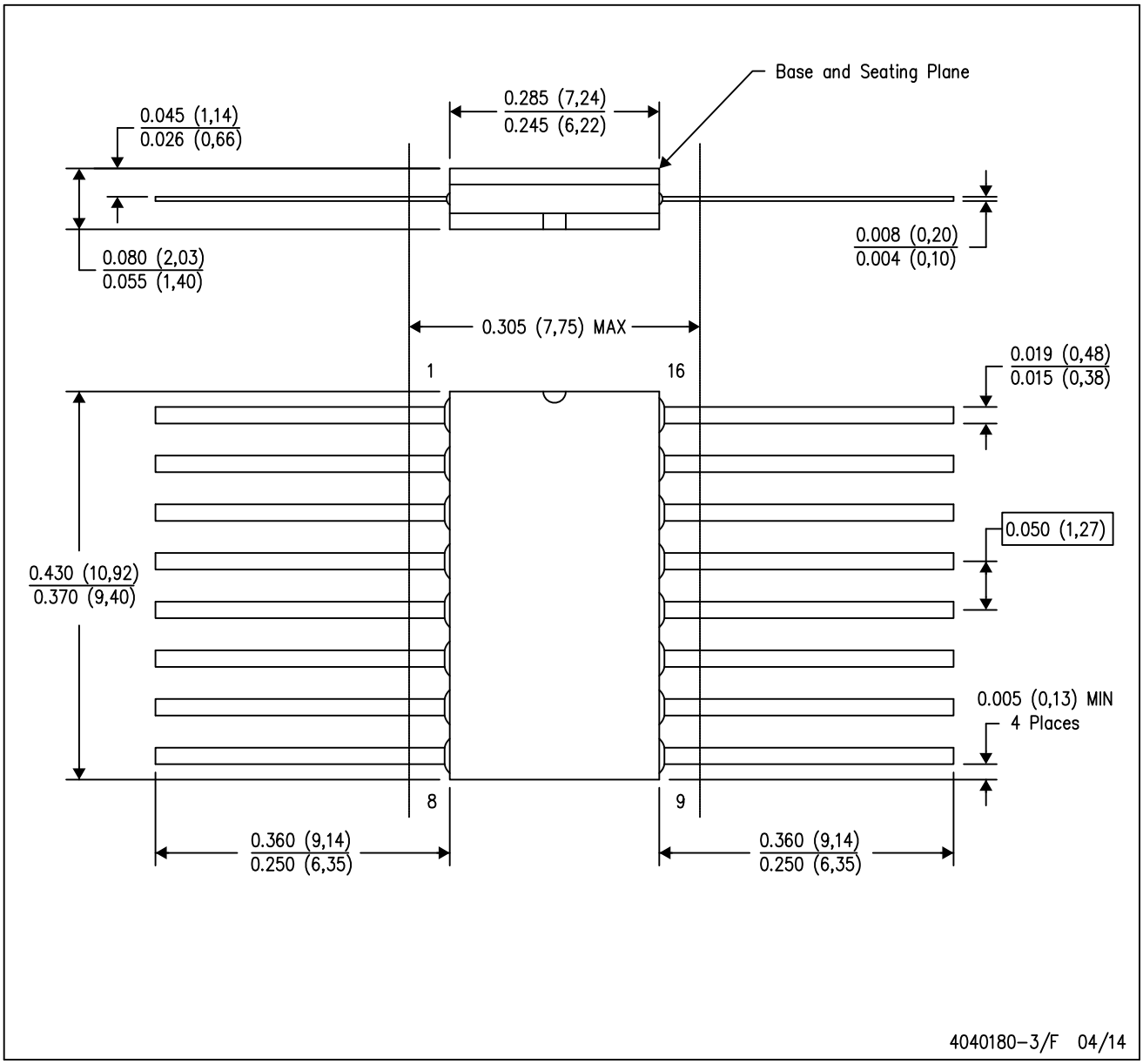

NOTES:
A. All linear dimensions are in inches (millimeters).
B. This drawing is subject to change without notice.
C. This package can be hermetically sealed with a ceramic lid using glass frit.
D. Index point is provided on cap for terminal identification only.
E. Falls within MIL STD 1835 GDFP2–F16

GENERIC PACKAGE VIEW

FK 20

LCCC - 2.03 mm max height

8.89 x 8.89, 1.27 mm pitch

LEADLESS CERAMIC CHIP CARRIER

This image is a representation of the package family, actual package may vary.
Refer to the product data sheet for package details.

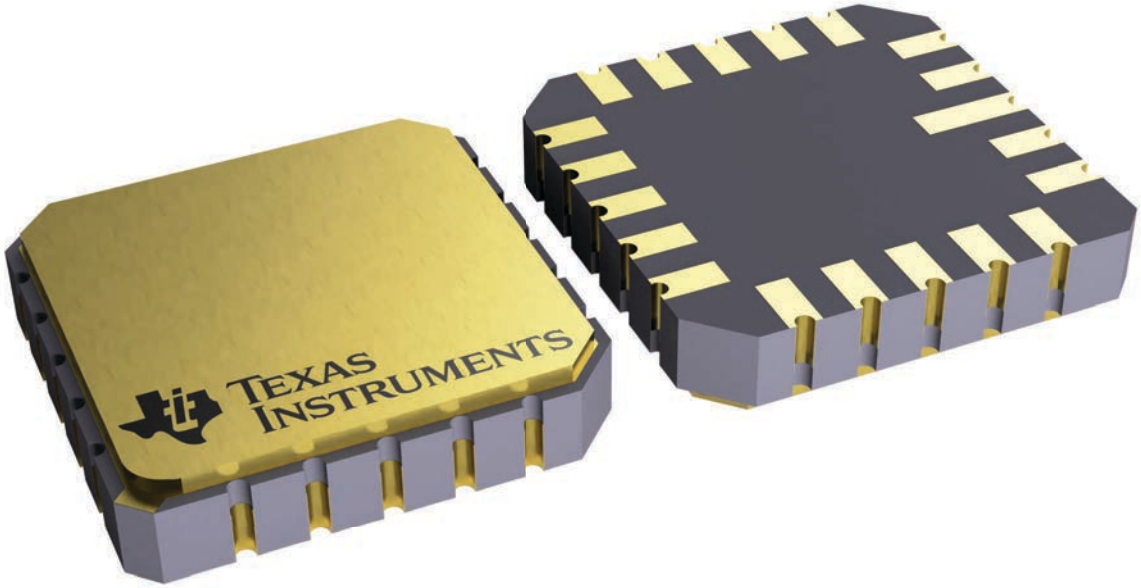

4229370VA\

J (R–GDIP–T**) CERAMIC DUAL IN–LINE PACKAGE

14 LEADS SHOWN

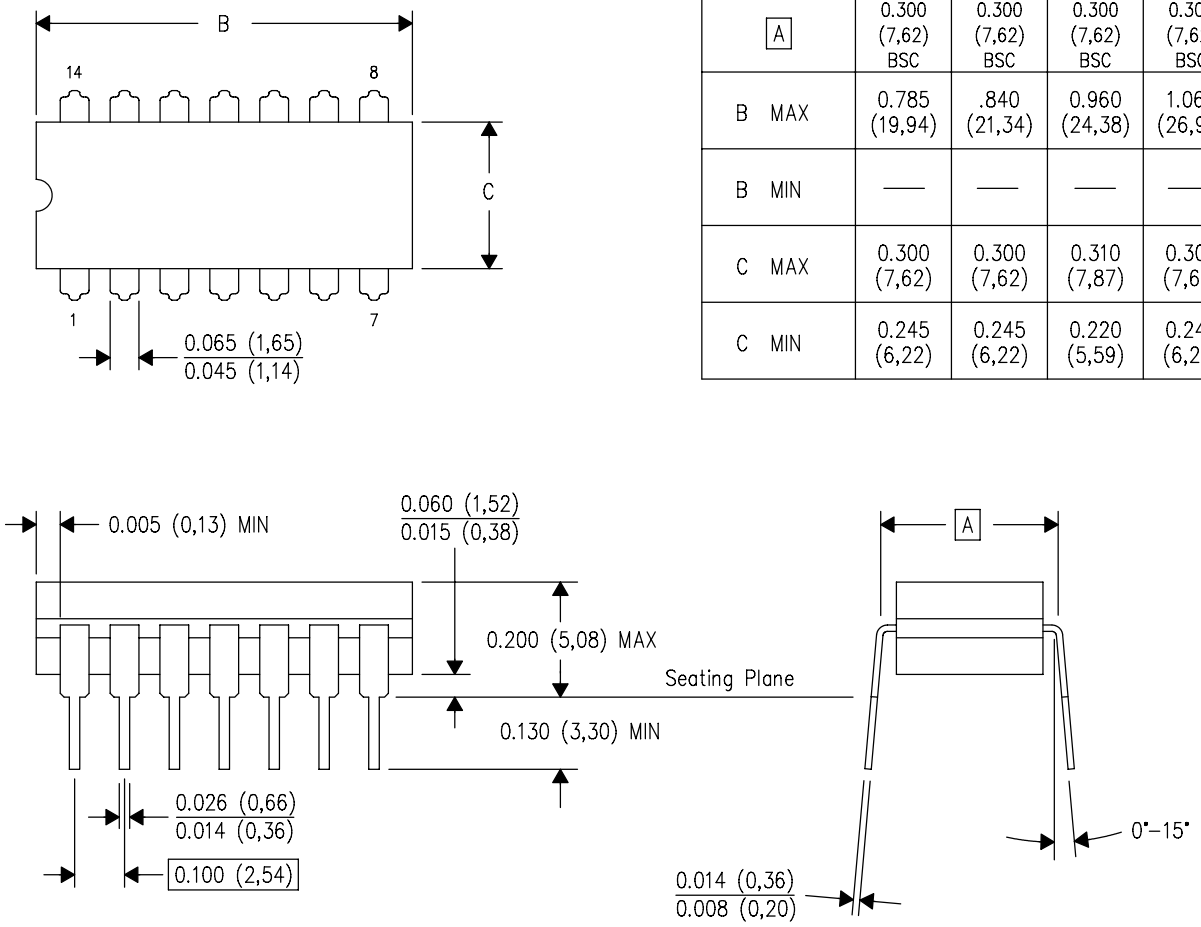

DIM \ PINS **	14	16	18	20
A	0.300 (7,62) BSC	0.300 (7,62) BSC	0.300 (7,62) BSC	0.300 (7,62) BSC
B MAX	0.785 (19,94)	.840 (21,34)	0.960 (24,38)	1.060 (26,92)
B MIN	—	—	—	—
C MAX	0.300 (7,62)	0.300 (7,62)	0.310 (7,87)	0.300 (7,62)
C MIN	0.245 (6,22)	0.245 (6,22)	0.220 (5,59)	0.245 (6,22)

4040083/F 03/03

NOTES:
- A. All linear dimensions are in inches (millimeters).
- B. This drawing is subject to change without notice.
- C. This package is hermetically sealed with a ceramic lid using glass frit.
- D. Index point is provided on cap for terminal identification only on press ceramic glass frit seal only.
- E. Falls within MIL STD 1835 GDIP1–T14, GDIP1–T16, GDIP1–T18 and GDIP1–T20.

N (R–PDIP–T**) PLASTIC DUAL–IN–LINE PACKAGE

16 PINS SHOWN

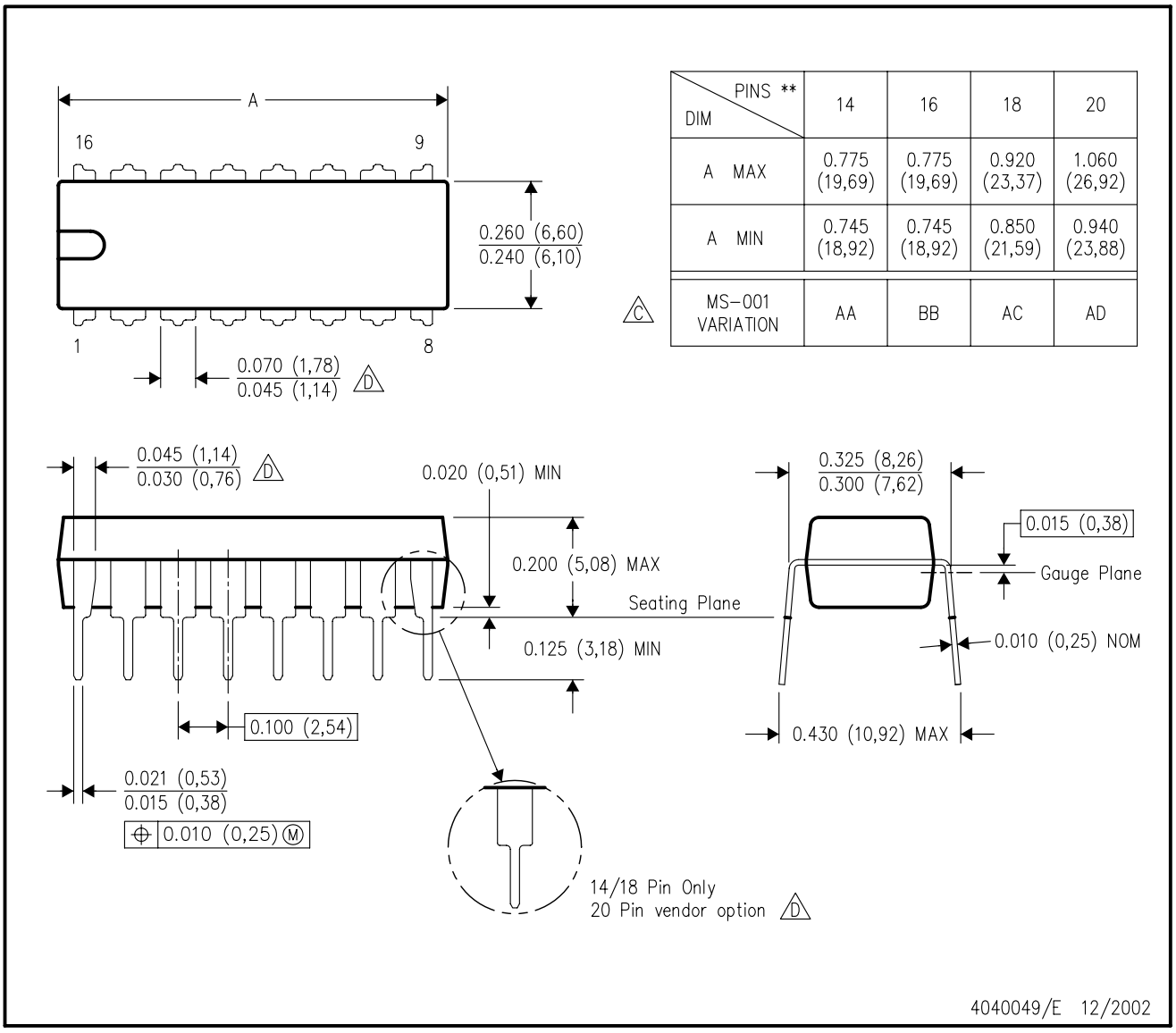

DIM \ PINS **	14	16	18	20
A MAX	0.775 (19,69)	0.775 (19,69)	0.920 (23,37)	1.060 (26,92)
A MIN	0.745 (18,92)	0.745 (18,92)	0.850 (21,59)	0.940 (23,88)
MS–001 VARIATION (C)	AA	BB	AC	AD

NOTES:
A. All linear dimensions are in inches (millimeters).
B. This drawing is subject to change without notice.
C. Falls within JEDEC MS–001, except 18 and 20 pin minimum body length (Dim A).
D. The 20 pin end lead shoulder width is a vendor option, either half or full width.

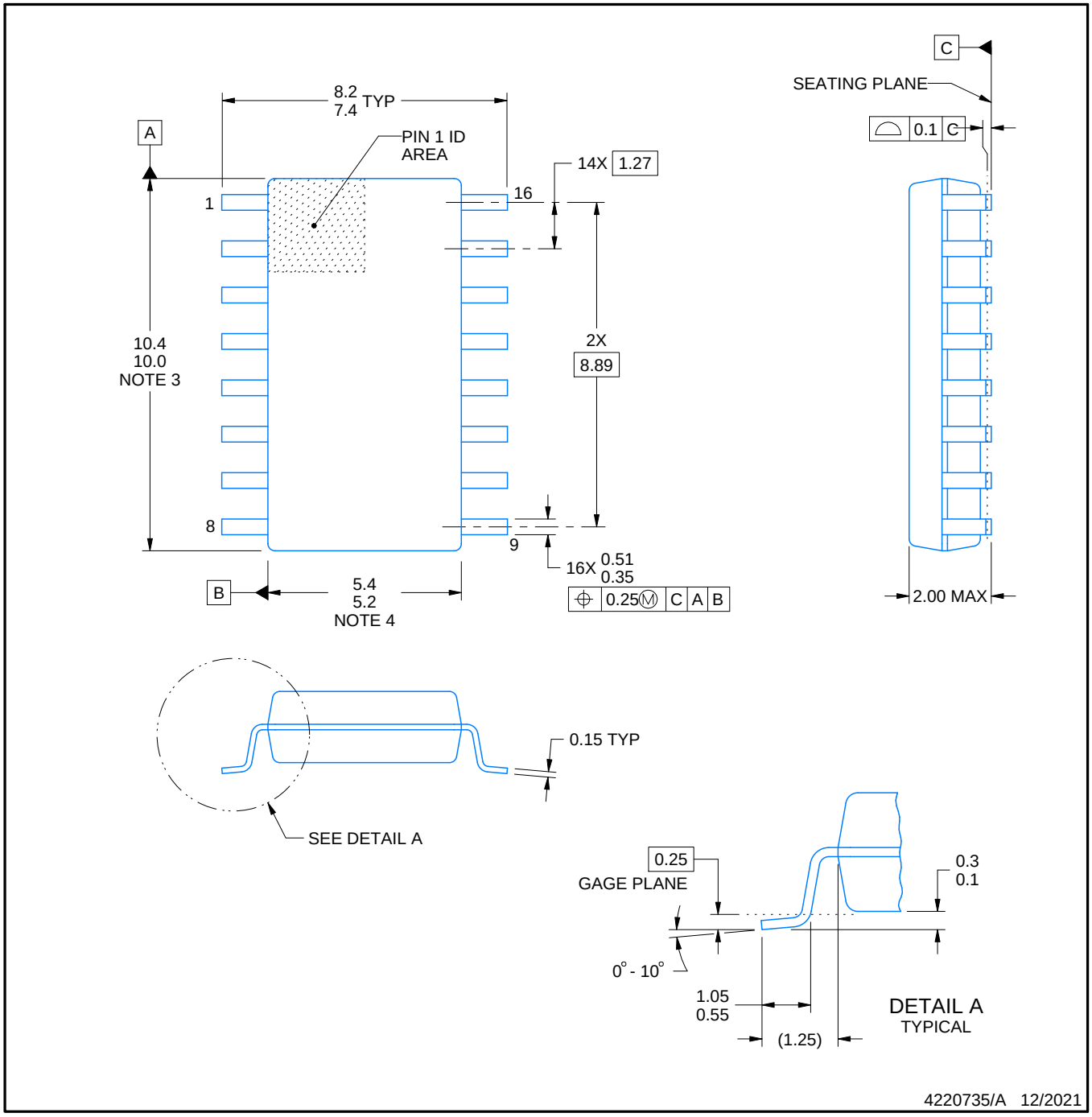

NOTES:

1. All linear dimensions are in millimeters. Dimensions in parenthesis are for reference only. Dimensioning and tolerancing per ASME Y14.5M.
2. This drawing is subject to change without notice.
3. This dimension does not include mold flash, protrusions, or gate burrs. Mold flash, protrusions, or gate burrs shall not exceed 0.15 mm, per side.
4. This dimension does not include interlead flash. Interlead flash shall not exceed 0.25 mm, per side.

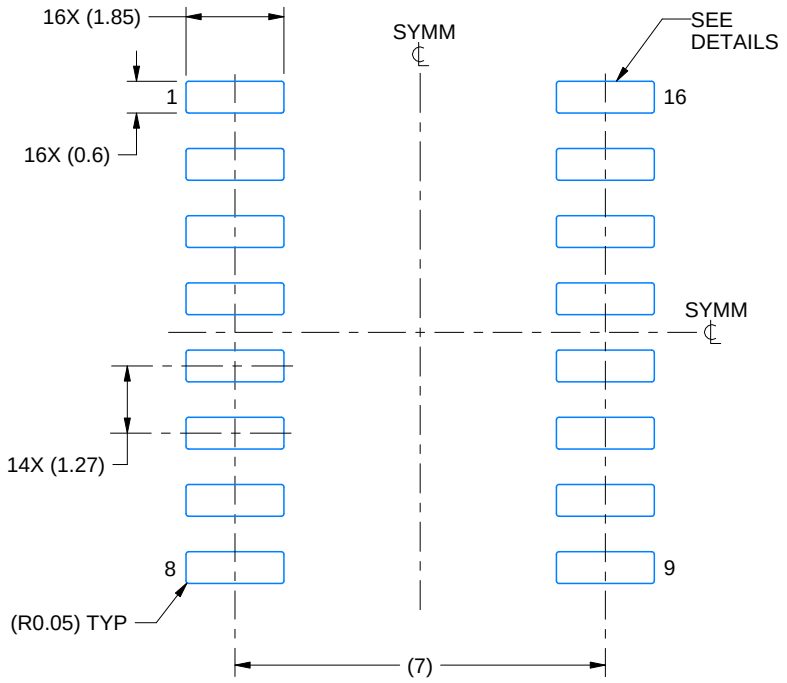

LAND PATTERN EXAMPLE
SCALE:7X

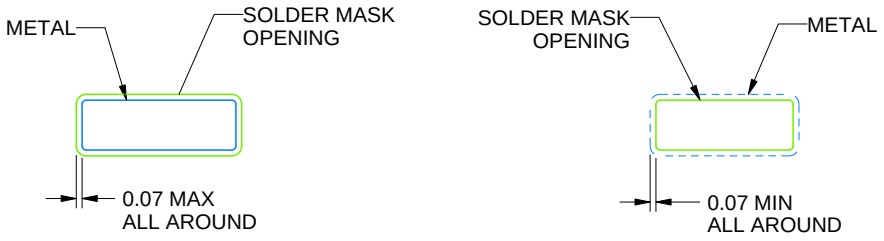

NON SOLDER MASK DEFINED

SOLDER MASK DEFINED

SOLDER MASK DETAILS

4220735/A 12/2021

NOTES: (continued)

5. Publication IPC-7351 may have alternate designs.
6. Solder mask tolerances between and around signal pads can vary based on board fabrication site.

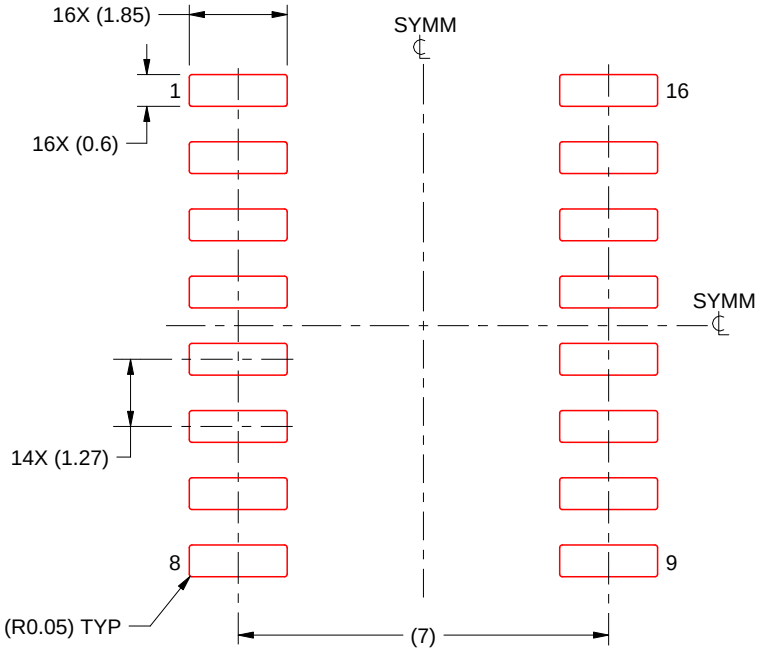

SOLDER PASTE EXAMPLE
BASED ON 0.125 mm THICK STENCIL
SCALE:7X

4220735/A 12/2021

NOTES: (continued)

7. Laser cutting apertures with trapezoidal walls and rounded corners may offer better paste release. IPC-7525 may have alternate design recommendations.
8. Board assembly site may have different recommendations for stencil design.

D (R–PDSO–G16) PLASTIC SMALL OUTLINE

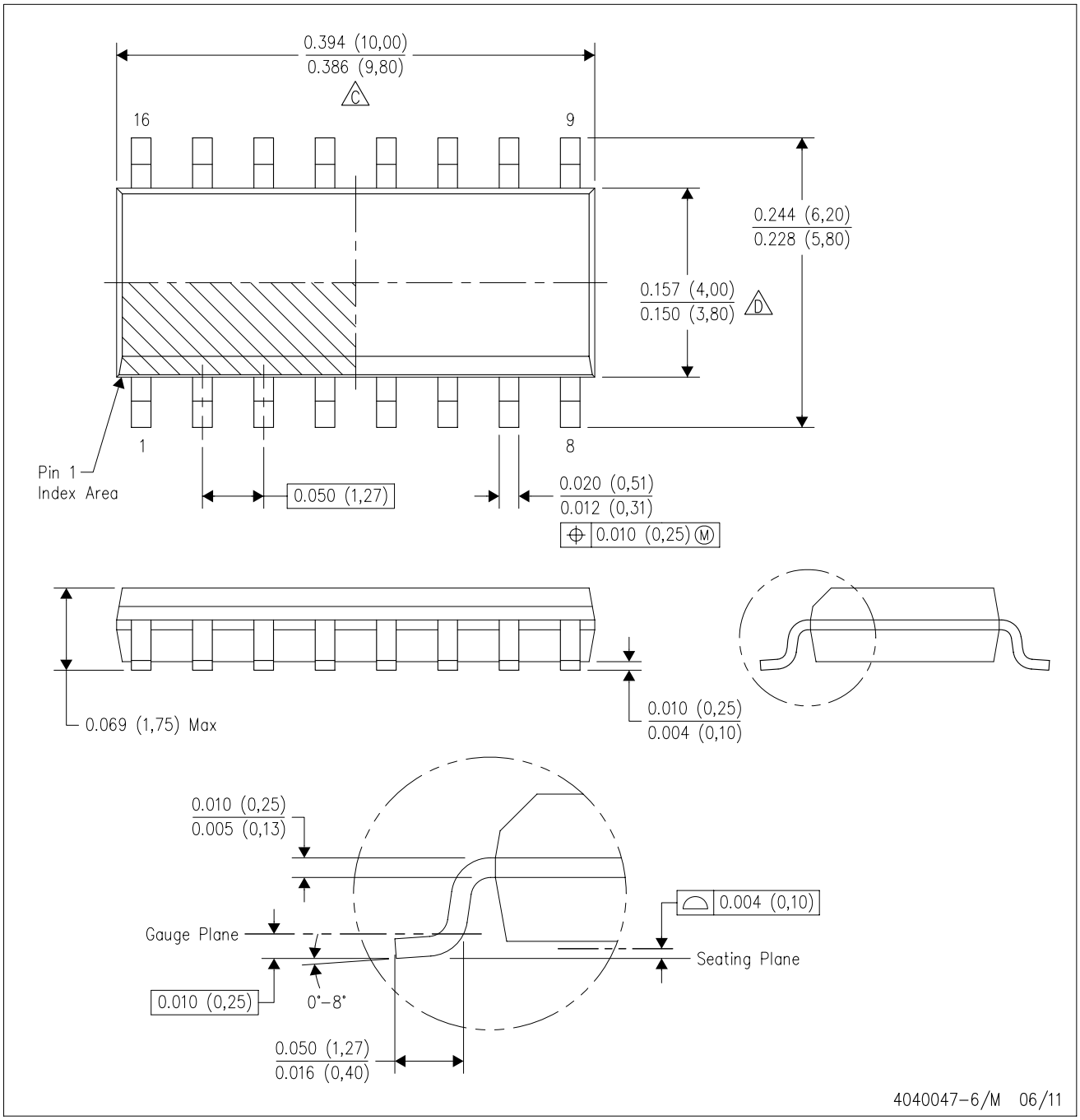

NOTES:
A. All linear dimensions are in inches (millimeters).
B. This drawing is subject to change without notice.
C. Body length does not include mold flash, protrusions, or gate burrs. Mold flash, protrusions, or gate burrs shall not exceed 0.006 (0,15) each side.
D. Body width does not include interlead flash. Interlead flash shall not exceed 0.017 (0,43) each side.
E. Reference JEDEC MS–012 variation AC.

IMPORTANT NOTICE AND DISCLAIMER

TI PROVIDES TECHNICAL AND RELIABILITY DATA (INCLUDING DATASHEETS), DESIGN RESOURCES (INCLUDING REFERENCE DESIGNS), APPLICATION OR OTHER DESIGN ADVICE, WEB TOOLS, SAFETY INFORMATION, AND OTHER RESOURCES “AS IS” AND WITH ALL FAULTS, AND DISCLAIMS ALL WARRANTIES, EXPRESS AND IMPLIED, INCLUDING WITHOUT LIMITATION ANY IMPLIED WARRANTIES OF MERCHANTABILITY, FITNESS FOR A PARTICULAR PURPOSE OR NON-INFRINGEMENT OF THIRD PARTY INTELLECTUAL PROPERTY RIGHTS.

These resources are intended for skilled developers designing with TI products. You are solely responsible for (1) selecting the appropriate TI products for your application, (2) designing, validating and testing your application, and (3) ensuring your application meets applicable standards, and any other safety, security, regulatory or other requirements.

These resources are subject to change without notice. TI grants you permission to use these resources only for development of an application that uses the TI products described in the resource. Other reproduction and display of these resources is prohibited. No license is granted to any other TI intellectual property right or to any third party intellectual property right. TI disclaims responsibility for, and you fully indemnify TI and its representatives against any claims, damages, costs, losses, and liabilities arising out of your use of these resources.

TI’s products are provided subject to TI’s Terms of Sale, TI’s General Quality Guidelines, or other applicable terms available either on ti.com or provided in conjunction with such TI products. TI’s provision of these resources does not expand or otherwise alter TI’s applicable warranties or warranty disclaimers for TI products. Unless TI explicitly designates a product as custom or customer-specified, TI products are standard, catalog, general purpose devices.

TI objects to and rejects any additional or different terms you may propose.

Copyright © 2026, Texas Instruments Incorporated

Last updated 10/2025