- **3-State Outputs Drive Bus Lines or Buffer Memory Address Registers**
- **Choice of True or Inverting Outputs**
- **Package Options Include Plastic "Small Outline" Packages, Ceramic Chip Carriers and Flat Packages, and Plastic and Ceramic DIPs**
- **Dependable Texas Instruments Quality and Reliability**

'365A, '367A, 'LS365A, 'LS367A True Outputs '366A, '368A, 'LS366A, 'LS368A Inverting Outputs

description

These Hex buffers and line drivers are designed specifically to improve both the performance and density of three-state memory address drivers, clock drivers, and bus oriented receivers and transmitters. The designer has choice of selected combinations of inverting and noninverting outputs, symmetrical $\overline{G}$ (active-low control) inputs.

These devices feature high fan-out, improved fan-in, and can be used to drive terminated lines down to 133 ohms.

The SN54365A thru SN54368A and SN54LS365A thru SN54LS368A are characterized for operation over the full military temperature range of −55°C to 125°C. The SN74365A thru SN74368A and SN74LS365A thru SN74LS368A are characterized for operation from 0°C to 70°C.

SN54365A, 366A, SN54LS365A, 366A . . . J PACKAGE
SN74365A, 366A . . . N PACKAGE
SN74LS365A, SN74LS366A . . . D OR N PACKAGE
(TOP VIEW)

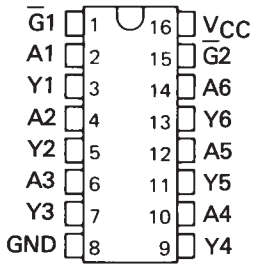

SN54LS365A, SN54LS366A . . . FK PACKAGE
(TOP VIEW)

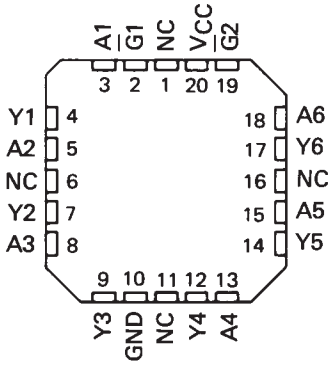

SN54367A, 368A, SN54LS367A, 368A . . . J PACKAGE
SN74367A, 368A . . . N PACKAGE
SN74LS367A, SN74LS368A . . . D OR N PACKAGE
(TOP VIEW)

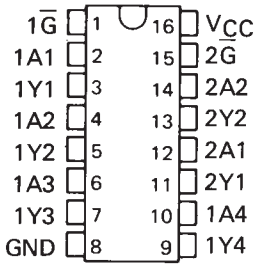

SN54LS367A, SN54LS368A . . . FK PACKAGE
(TOP VIEW)

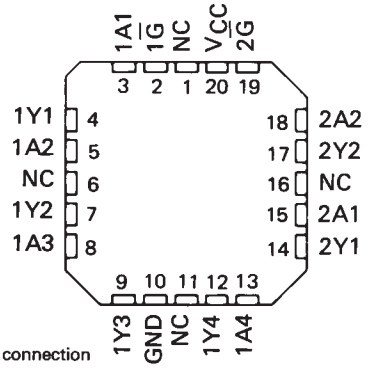

NC – No internal connection

PRODUCTION DATA documents contain information current as of publication date. Products conform to specifications per the terms of Texas Instruments standard warranty. Production processing does not necessarily include testing of all parameters.

schematics of inputs and outputs

'365A thru '368A

EQUIVALENT OF ALL INPUTS

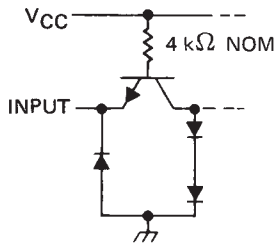

TYPICAL OF ALL OUTPUTS

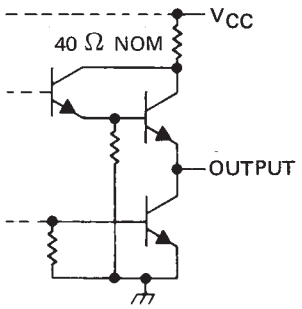

'LS365A thru 'LS368A

EQUIVALENT OF ALL DATA INPUTS

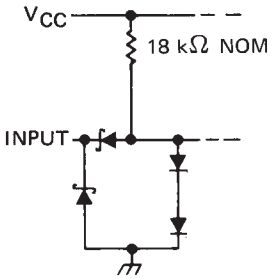

EQUIVALENT OF ALL G INPUTS

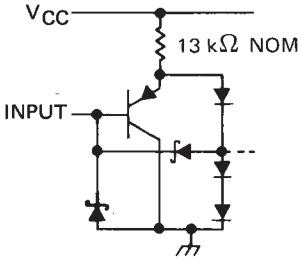

TYPICAL OF ALL OUTPUTS

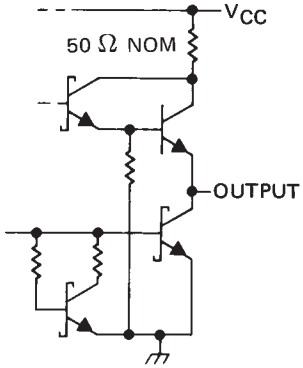

logic diagrams (positive logic)

'365A, 'LS365A

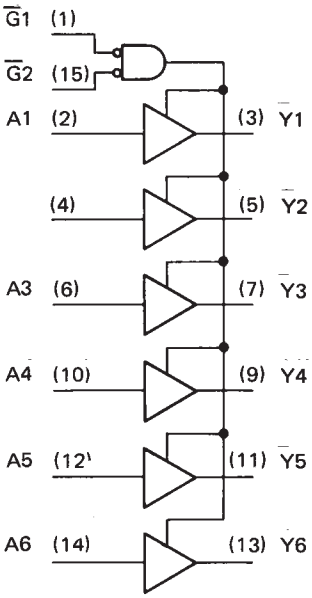

'366A, 'LS366A

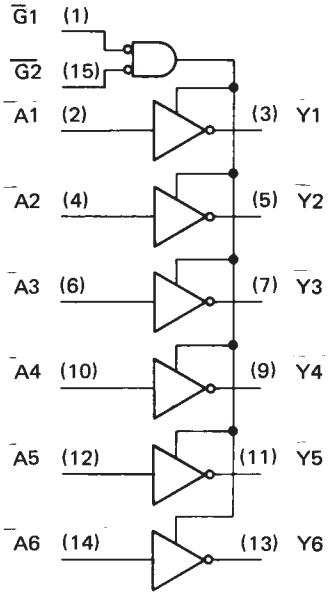

'367A, 'LS367A

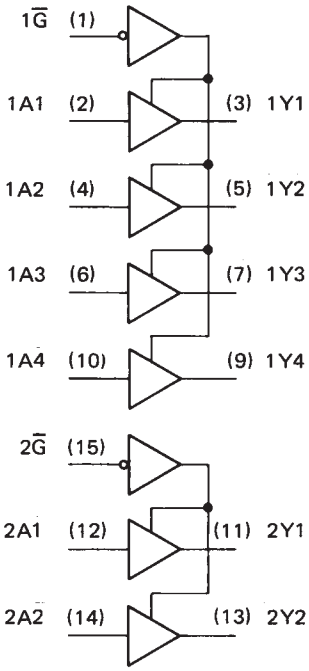

'368A, 'LS368A

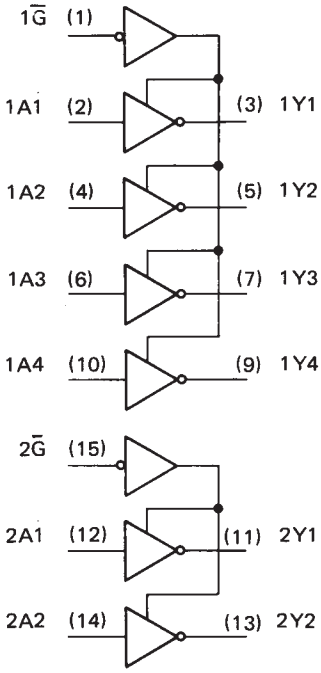

Pin numbers shown are for D, J, and N packages.

logic symbols†

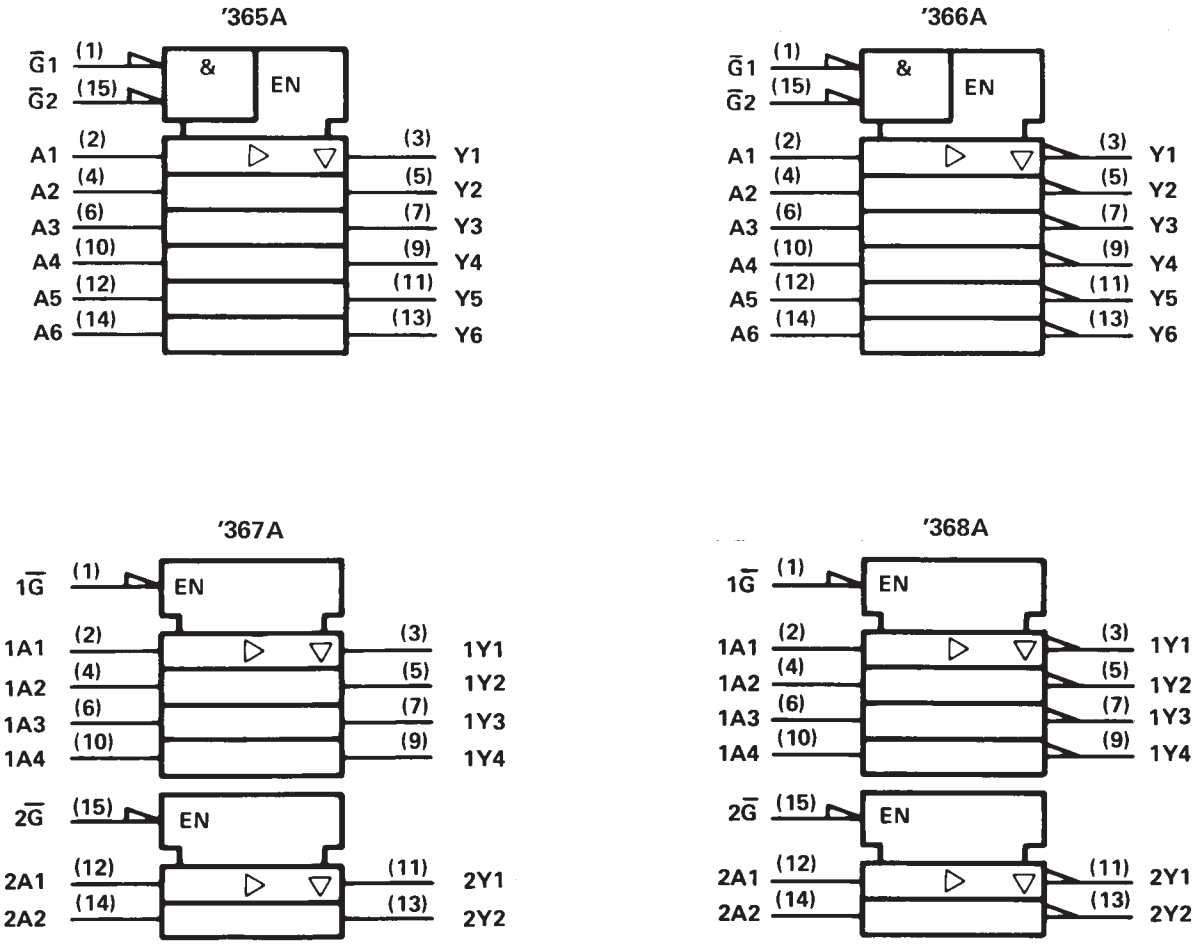

†These symbols are in accordance with ANSI/IEEE Std 91-1984 and IEC Publication 617-12.
Pin numbers shown are for D, J, and N packages.

absolute maximum ratings over operating free-air temperature range (unless otherwise noted)

Supply voltage, V_{CC} (see Note 1)		7 V
Input voltage: '365A, '366A, '367A, '368A		5.5 V
'LS365A, 'LS366A, 'LS367A, 'LS368A		7 V
Voltage applied to a disabled 3-state output		5.5 V
Operating free-air temperature:	SN54'	−55°C to 125°C
	SN74'	0°C to 70°C
Storage temperature range		−65°C to 150°C

NOTE 1: Voltage values are with respect to network ground terminal.

recommended operating conditions

		SN54365A SN54367A			SN74365A SN74367A			UNIT
		MIN	NOM	MAX	MIN	NOM	MAX	
V_{CC}	Supply voltage	4.5	5	5.5	4.75	5	5.25	V
V_{IH}	High-level input voltage	2			2			V
V_{IL}	Low-level input voltage			0.8			0.8	V
I_{OH}	High-level output current			– 2			– 5.2	mA
I_{OL}	Low-level output current			32			32	mA
T_A	Operating free-air temperature	– 55		125	0		70	°C

electrical characteristics over recommended operating free-air temperature range (unless otherwise noted)

PARAMETER		TEST CONDITIONS†			SN54365A SN54367A			SN74365A SN74367A			UNIT
					MIN	TYP‡	MAX	MIN	TYP‡	MAX	
V_{IK}		V_{CC} = MIN,	I_I = – 12 mA				– 1.5			– 1.5	V
V_{OH}		V_{CC} = MIN, I_{OH} = MAX	V_{IH} = 2 V,	V_{IL} = 0.8 V,	2.4	3.3		2.4	3.1		V
V_{OL}		V_{CC} = MIN, I_{OL} = 32 mA	V_{IH} = 2 V,	V_{IL} = 0.8 V,			0.4			0.4	V
I_{OZ}		V_{CC} = MAX, V_O = 2.4 V	V_{IH} = 2 V,	V_{IL} = 0.8 V,			40			40	μA
		V_{CC} = MAX, V_O = 0.4 V	V_{IH} = 2 V	V_{IL} = 0.8 V,			– 40			– 40	
I_I		V_{CC} = MAX,	V_I = 5.5 V				1			1	mA
I_{IH}		V_{CC} = MAX,	V_I = 2.4 V				40			40	μA
I_{IL}	A Inputs	V_{CC} = MAX,	V_I = 0.5 V,	Either $\overline{G}$ input at 2 V			– 40			– 40	μA
		V_{CC} = MAX,	V_I = 0.4 V,	Both $\overline{G}$ inputs at 0.4 V			– 1.6			– 1.6	mA
	$\overline{G}$ Inputs	V_{CC} = MAX,	V_I = 0.4 V				– 1.6			– 1.6	
I_{OS}§		V_{CC} = MAX			– 40		– 130	– 40		– 130	mA
I_{CC}		V_{CC} = MAX,	Data inputs = 0 V,	Output controls = 4.5 V		65	85		65	85	mA

† For conditions shown as MIN or MAX, use the appropriate value specified under recommended operating conditions.
‡ All typical values are at V_{CC} = 5 V, T_A = 25°C.
§ Not more than one output should be shorted at a time.

switching characteristics, V_{CC} = 5 V, T_A = 25°C (see note 2)

PARAMETER	FROM (INPUT)	TO (OUTPUT)	TEST CONDITIONS		MIN	TYP	MAX	UNIT
t_{PLH}	Any	Y	R_L = 400 Ω,	C_L = 50 pF			16	ns
t_{PHL}							22	ns
t_{PZH}							35	ns
t_{PZL}							37	ns
t_{PHZ}			R_L = 400 Ω,	C_L = 5 pF			11	ns
t_{PLZ}							27	ns

NOTE 2: Load circuits and voltage waveforms are shown in Section 1.

recommended operating conditions

		SN54366A SN54368A			SN74366A SN74368A			UNIT
		MIN	NOM	MAX	MIN	NOM	MAX	
V_{CC}	Supply voltage	4.5	5	5.5	4.75	5	5.25	V
V_{IH}	High-level input voltage	2			2			V
V_{IL}	Low-level input voltage			0.8			0.8	V
I_{OH}	High-level output current			−2			−5.2	mA
I_{OL}	Low-level output current			32			32	mA
T_A	Operating free-air temperature	−55		125	0		70	°C

electrical characteristics over recommended operating free-air temperature range (unless otherwise noted)

PARAMETER		TEST CONDITIONS†			SN54366A SN54368A			SN74366A SN74368A			UNIT
					MIN	TYP‡	MAX	MIN	TYP‡	MAX	
V_{IK}		V_{CC} = MIN,	I_I = −12 mA				−1.5			−1.5	V
V_{OH}		V_{CC} = MIN, I_{OH} = MAX	V_{IH} = 2 V,	V_{IL} = 0.8 V,	2.4	3.3		2.4	3.1		V
V_{OL}		V_{CC} = MIN, I_{OL} = 32 mA	V_{IH} = 2 V,	V_{IL} = 0.8 V,			0.4			0.4	V
I_{OZ}		V_{CC} = MAX, V_O = 2.4 V	V_{IH} = 2 V,	V_{IL} = 0.8 V,			40			40	μA
		V_{CC} = MAX, V_O = 0.4 V	V_{IH} = 2 V	V_{IL} = 0.8 V,			−40			−40	μA
I_I		V_{CC} = MAX,	V_I = 5.5 V				1			1	mA
I_{IH}		V_{CC} = MAX,	V_I = 2.4 V				40			40	μA
I_{IL}	A Inputs	V_{CC} = MAX,	V_I = 0.5 V,	Either $\overline{G}$ input at 2 V			−40			−40	μA
		V_{CC} = MAX,	V_I = 0.4 V,	Both $\overline{G}$ inputs at 0.4 V			−1.6			−1.6	mA
	$\overline{G}$ Inputs	V_{CC} = MAX,	V_I = 0.4 V				−1.6			−1.6	mA
I_{OS}§		V_{CC} = MAX			−40		−130	−40		−130	mA
I_{CC}		V_{CC} = MAX,	Data inputs = 0 V,	Output controls = 4.5 V,		59	77		59	77	mA

† For conditions shown as MIN or MAX, use the appropriate value specified under recommended operating conditions.
‡ All typical values are at V_{CC} = 5 V, T_A = 25°C.
§ Not more than one output should be shorted at a time.

switching characteristics, V_{CC} = 5 V, T_A = 25°C (see note 2)

PARAMETER	FROM (INPUT)	TO (OUTPUT)	TEST CONDITIONS		MIN	TYP	MAX	UNIT
t_{PLH}	Any	Y	R_L = 400 Ω,	C_L = 50 pF			17	ns
t_{PHL}							16	ns
t_{PZH}							35	ns
t_{PZL}							37	ns
t_{PHZ}			R_L = 400 Ω,	C_L = 5 pF			11	ns
t_{PLZ}							27	ns

NOTE 2: Load circuits and voltage waveforms are shown in Section 1.

recommended operating conditions

		SN54LS365A SN54LS367A			SN74LS365A SN74LS367A			UNIT
		MIN	NOM	MAX	MIN	NOM	MAX	
V_{CC}	Supply voltage	4.5	5	5.5	4.75	5	5.25	V
V_{IH}	High-level input voltage	2			2			V
V_{IL}	Low-level input voltage			0.7			0.8	V
I_{OH}	High-level output current			−1			−2.6	mA
I_{OL}	Low-level output current			12			24	mA
T_A	Operating free-air temperature	−55		125	0		70	°C

electrical characteristics over recommended operating free-air temperature range (unless otherwise noted)

PARAMETER		TEST CONDITIONS†			SN54LS365A SN54LS367A			SN74LS365A SN74LS367A			UNIT
					MIN	TYP‡	MAX	MIN	TYP‡	MAX	
V_{IK}		V_{CC} = MIN,	I_I = −18 mA				−1.5			−1.5	V
V_{OH}		V_{CC} = MIN, I_{OH} = MAX	V_{IH} = 2 V,	V_{IL} = MAX,	2.4	3.3		2.4	3.1		V
V_{OL}		V_{CC} = MIN, I_{OL} = 12 mA	V_{IH} = 2 V,	V_{IL} = MAX,		0.25	0.4		0.25	0.4	V
		V_{CC} = MIN, I_{OL} = 24 mA	V_{IH} = 2 V,	V_{IL} = 0.8 V,					0.35	0.5	
I_{OZ}		V_{CC} = MAX, V_O = 2.4 V	V_{IH} = 2 V,	V_{IL} = MAX,			20			20	μA
		V_{CC} = MAX, V_O = 0.4 V	V_{IH} = 2 V,	V_{IL} = MAX,			−20			−20	
I_I		V_{CC} = MAX,	V_I = 7 V				0.1			0.1	mA
I_{IH}		V_{CC} = MAX,	V_I = 2.7 V				20			20	μA
I_{IL}	A Inputs	V_{CC} = MAX,	V_I = 0.5 V,	Either $\overline{G}$ input at 2 V			−20			−20	μA
		V_{CC} = MAX,	V_I = 0.4 V,	Both $\overline{G}$ inputs at 0.4 V			−0.4			−0.4	mA
	$\overline{G}$ Inputs	V_{CC} = MAX,	V_I = 0.4 V				−0.2			−0.2	
I_{OS}§		V_{CC} = MAX			−40		−225	−40		−225	mA
I_{CC}		V_{CC} = MAX,	Data inputs = 0 V,	Output controls = 4.5 V,		14	24		14	24	mA

† For conditions shown as MIN or MAX, use the appropriate value specified under recommended operating conditions.
‡ All typical values are at V_{CC} = 5 V, T_A = 25°C.
§ Not more than one output should be shorted at a time, and the duration of the short circuit should not exceed one second.

switching characteristics, V_{CC} = 5 V, T_A = 25°C (see note 2)

PARAMETER	FROM (INPUT)	TO (OUTPUT)	TEST CONDITIONS	MIN	TYP	MAX	UNIT
t_{PLH}	Any	Y	R_L = 667 Ω, C_L = 45 pF		10	16	ns
t_{PHL}					9	22	ns
t_{PZH}					19	35	ns
t_{PZL}					24	40	ns
t_{PHZ}			R_L = 667 Ω, C_L = 5 pF			30	ns
t_{PLZ}						35	ns

NOTE 2: Load circuits and voltage waveforms are shown in Section 1.

recommended operating conditions

		SN54LS366A SN54LS368A			SN74LS366A SN74LS368A			UNIT
		MIN	NOM	MAX	MIN	NOM	MAX	
V_{CC}	Supply voltage	4.5	5	5.5	4.75	5	5.25	V
V_{IH}	High-level input voltage	2			2			V
V_{IL}	Low-level input voltage			0.7			0.8	V
I_{OH}	High-level output current			–1			– 2.6	mA
I_{OL}	Low-level output current			12			24	mA
T_A	Operating free-air temperature	– 55		125	0		70	°C

electrical characteristics over recommended operating free-air temperature range (unless otherwise noted)

PARAMETER		TEST CONDITIONS†			SN54LS366A SN54LS368A			SN74LS366A SN74LS368A			UNIT
					MIN	TYP‡	MAX	MIN	TYP‡	MAX	
V_{IK}		V_{CC} = MIN,	I_I = – 18 mA				– 1.5			– 1.5	V
V_{OH}		V_{CC} = MIN, I_{OH} = MAX	V_{IH} = 2 V,	V_{IL} = MAX,	2.4	3.3		2.4	3.1		V
V_{OL}		V_{CC} = MIN, I_{OL} = 12 mA	V_{IH} = 2 V,	V_{IL} = MAX,		0.25	0.4		0.25	0.4	V
		V_{CC} = MIN, I_{OL} = 24 mA	V_{IH} = 2 V,	V_{IL} = 0.8 V,					0.35	0.5	
I_{OZ}		V_{CC} = MAX, V_O = 2.4 V	V_{IH} = 2 V,	V_{IL} = MAX,			20			20	μA
		V_{CC} = MAX, V_O = 0.4 V	V_{IH} = 2 V,	V_{IL} = MAX,			– 20			– 20	
I_I		V_{CC} = MAX,	V_I = 7 V				0.1			0.1	mA
I_{IH}		V_{CC} = MAX,	V_I = 2.7 V				20			20	μA
I_{IL}	A Inputs	V_{CC} = MAX,	V_I = 0.5 V,	Either $\overline{G}$ input at 2 V			– 20			– 20	uA
		V_{CC} = MAX,	V_I = 0.4 V,	Both $\overline{G}$ inputs at 0.4 V			– 0.4			– 0.4	mA
	$\overline{G}$ Inputs	V_{CC} = MAX,	V_I = 0.4 V				– 0.2			– 0.2	
I_{OS}§		V_{CC} = MAX			– 40		– 225	– 40		– 225	mA
I_{CC}		V_{CC} = MAX,	Data inputs = 0 V,	Output controls = 4.5 V,		12	21		12	21	mA

† For conditions shown as MIN or MAX, use the appropriate value specified under recommended operating conditions.
‡ All typical values are at V_{CC} = 5 V, T_A = 25°C.
§ Not more than one output should be shorted at a time, and the duration of the short circuit should not exceed one second.

switching characteristics, V_{CC} = 5 V, T_A = 25°C (see note 2)

PARAMETER	FROM (INPUT)	TO (OUTPUT)	TEST CONDITIONS	MIN	TYP	MAX	UNIT
t_{PLH}	Any	Y	R_L = 667 Ω, C_L = 45 pF		7	15	ns
t_{PHL}					12	18	ns
t_{PZH}					18	35	ns
t_{PZL}					28	45	ns
t_{PHZ}			R_L = 667 Ω, C_L = 5 pF			32	ns
t_{PLZ}						35	ns

NOTE 2: Load circuits and voltage waveforms are shown in Section 1.

PACKAGING INFORMATION

Orderable part number	Status (1)	Material type (2)	Package | Pins	Package qty | Carrier	RoHS (3)	Lead finish/ Ball material (4)	MSL rating/ Peak reflow (5)	Op temp (°C)	Part marking (6)
JM38510/32201B2A	Active	Production	LCCC (FK) | 20	55 | TUBE	No	SNPB	N/A for Pkg Type	-55 to 125	JM38510/ 32201B2A
JM38510/32201B2A.A	Active	Production	LCCC (FK) | 20	55 | TUBE	No	SNPB	N/A for Pkg Type	-55 to 125	JM38510/ 32201B2A
JM38510/32201B2A.A	Active	Production	LCCC (FK) | 20	55 | TUBE	No	SNPB	N/A for Pkg Type	-55 to 125	JM38510/ 32201B2A
JM38510/32201BEA	Active	Production	CDIP (J) | 16	25 | TUBE	No	SNPB	N/A for Pkg Type	-55 to 125	JM38510/ 32201BEA
JM38510/32201BEA	Active	Production	CDIP (J) | 16	25 | TUBE	No	SNPB	N/A for Pkg Type	-55 to 125	JM38510/ 32201BEA
JM38510/32201BEA.A	Active	Production	CDIP (J) | 16	25 | TUBE	No	SNPB	N/A for Pkg Type	-55 to 125	JM38510/ 32201BEA
JM38510/32201BEA.A	Active	Production	CDIP (J) | 16	25 | TUBE	No	SNPB	N/A for Pkg Type	-55 to 125	JM38510/ 32201BEA
JM38510/32203B2A	Active	Production	LCCC (FK) | 20	55 | TUBE	No	SNPB	N/A for Pkg Type	-55 to 125	JM38510/ 32203B2A
JM38510/32203B2A	Active	Production	LCCC (FK) | 20	55 | TUBE	No	SNPB	N/A for Pkg Type	-55 to 125	JM38510/ 32203B2A
JM38510/32203B2A.A	Active	Production	LCCC (FK) | 20	55 | TUBE	No	SNPB	N/A for Pkg Type	-55 to 125	JM38510/ 32203B2A
JM38510/32203B2A.A	Active	Production	LCCC (FK) | 20	55 | TUBE	No	SNPB	N/A for Pkg Type	-55 to 125	JM38510/ 32203B2A
JM38510/32203BEA	Active	Production	CDIP (J) | 16	25 | TUBE	No	SNPB	N/A for Pkg Type	-55 to 125	JM38510/ 32203BEA
JM38510/32203BEA	Active	Production	CDIP (J) | 16	25 | TUBE	No	SNPB	N/A for Pkg Type	-55 to 125	JM38510/ 32203BEA
JM38510/32203BEA.A	Active	Production	CDIP (J) | 16	25 | TUBE	No	SNPB	N/A for Pkg Type	-55 to 125	JM38510/ 32203BEA
JM38510/32203BEA.A	Active	Production	CDIP (J) | 16	25 | TUBE	No	SNPB	N/A for Pkg Type	-55 to 125	JM38510/ 32203BEA
JM38510/32203BFA	Active	Production	CFP (W) | 16	25 | TUBE	No	SNPB	N/A for Pkg Type	-55 to 125	JM38510/ 32203BFA

Orderable part number	Status (1)	Material type (2)	Package | Pins	Package qty | Carrier	RoHS (3)	Lead finish/ Ball material (4)	MSL rating/ Peak reflow (5)	Op temp (°C)	Part marking (6)
JM38510/32203BFA	Active	Production	CFP (W) | 16	25 | TUBE	No	SNPB	N/A for Pkg Type	-55 to 125	JM38510/ 32203BFA
JM38510/32203BFA.A	Active	Production	CFP (W) | 16	25 | TUBE	No	SNPB	N/A for Pkg Type	-55 to 125	JM38510/ 32203BFA
JM38510/32203BFA.A	Active	Production	CFP (W) | 16	25 | TUBE	No	SNPB	N/A for Pkg Type	-55 to 125	JM38510/ 32203BFA
M38510/32201B2A	Active	Production	LCCC (FK) | 20	55 | TUBE	No	SNPB	N/A for Pkg Type	-55 to 125	JM38510/ 32201B2A
M38510/32201B2A	Active	Production	LCCC (FK) | 20	55 | TUBE	No	SNPB	N/A for Pkg Type	-55 to 125	JM38510/ 32201B2A
M38510/32201BEA	Active	Production	CDIP (J) | 16	25 | TUBE	No	SNPB	N/A for Pkg Type	-55 to 125	JM38510/ 32201BEA
M38510/32201BEA	Active	Production	CDIP (J) | 16	25 | TUBE	No	SNPB	N/A for Pkg Type	-55 to 125	JM38510/ 32201BEA
M38510/32203B2A	Active	Production	LCCC (FK) | 20	55 | TUBE	No	SNPB	N/A for Pkg Type	-55 to 125	JM38510/ 32203B2A
M38510/32203B2A	Active	Production	LCCC (FK) | 20	55 | TUBE	No	SNPB	N/A for Pkg Type	-55 to 125	JM38510/ 32203B2A
M38510/32203BEA	Active	Production	CDIP (J) | 16	25 | TUBE	No	SNPB	N/A for Pkg Type	-55 to 125	JM38510/ 32203BEA
M38510/32203BEA	Active	Production	CDIP (J) | 16	25 | TUBE	No	SNPB	N/A for Pkg Type	-55 to 125	JM38510/ 32203BEA
M38510/32203BFA	Active	Production	CFP (W) | 16	25 | TUBE	No	SNPB	N/A for Pkg Type	-55 to 125	JM38510/ 32203BFA
M38510/32203BFA	Active	Production	CFP (W) | 16	25 | TUBE	No	SNPB	N/A for Pkg Type	-55 to 125	JM38510/ 32203BFA
SN54LS365AJ	Active	Production	CDIP (J) | 16	25 | TUBE	No	SNPB	N/A for Pkg Type	-55 to 125	SN54LS365AJ
SN54LS365AJ	Active	Production	CDIP (J) | 16	25 | TUBE	No	SNPB	N/A for Pkg Type	-55 to 125	SN54LS365AJ
SN54LS365AJ.A	Active	Production	CDIP (J) | 16	25 | TUBE	No	SNPB	N/A for Pkg Type	-55 to 125	SN54LS365AJ
SN54LS365AJ.A	Active	Production	CDIP (J) | 16	25 | TUBE	No	SNPB	N/A for Pkg Type	-55 to 125	SN54LS365AJ
SN54LS366AJ	Active	Production	CDIP (J) | 16	25 | TUBE	No	SNPB	N/A for Pkg Type	-55 to 125	SN54LS366AJ
SN54LS366AJ	Active	Production	CDIP (J) | 16	25 | TUBE	No	SNPB	N/A for Pkg Type	-55 to 125	SN54LS366AJ
SN54LS366AJ.A	Active	Production	CDIP (J) | 16	25 | TUBE	No	SNPB	N/A for Pkg Type	-55 to 125	SN54LS366AJ
SN54LS366AJ.A	Active	Production	CDIP (J) | 16	25 | TUBE	No	SNPB	N/A for Pkg Type	-55 to 125	SN54LS366AJ

Orderable part number	Status (1)	Material type (2)	Package | Pins	Package qty | Carrier	RoHS (3)	Lead finish/ Ball material (4)	MSL rating/ Peak reflow (5)	Op temp (°C)	Part marking (6)
SN54LS367AJ	Active	Production	CDIP (J) | 16	25 | TUBE	No	SNPB	N/A for Pkg Type	-55 to 125	SN54LS367AJ
SN54LS367AJ	Active	Production	CDIP (J) | 16	25 | TUBE	No	SNPB	N/A for Pkg Type	-55 to 125	SN54LS367AJ
SN54LS367AJ.A	Active	Production	CDIP (J) | 16	25 | TUBE	No	SNPB	N/A for Pkg Type	-55 to 125	SN54LS367AJ
SN54LS367AJ.A	Active	Production	CDIP (J) | 16	25 | TUBE	No	SNPB	N/A for Pkg Type	-55 to 125	SN54LS367AJ
SN54LS368AJ	Active	Production	CDIP (J) | 16	25 | TUBE	No	SNPB	N/A for Pkg Type	-55 to 125	SN54LS368AJ
SN54LS368AJ	Active	Production	CDIP (J) | 16	25 | TUBE	No	SNPB	N/A for Pkg Type	-55 to 125	SN54LS368AJ
SN54LS368AJ.A	Active	Production	CDIP (J) | 16	25 | TUBE	No	SNPB	N/A for Pkg Type	-55 to 125	SN54LS368AJ
SN54LS368AJ.A	Active	Production	CDIP (J) | 16	25 | TUBE	No	SNPB	N/A for Pkg Type	-55 to 125	SN54LS368AJ
SN74LS365AD	Obsolete	Production	SOIC (D) | 16	-	-	Call TI	Call TI	0 to 70	LS365A
SN74LS365AD	Obsolete	Production	SOIC (D) | 16	-	-	Call TI	Call TI	0 to 70	LS365A
SN74LS365ADR	Active	Production	SOIC (D) | 16	2500 | LARGE T&R	Yes	NIPDAU	Level-1-260C-UNLIM	0 to 70	LS365A
SN74LS365ADR	Active	Production	SOIC (D) | 16	2500 | LARGE T&R	Yes	NIPDAU	Level-1-260C-UNLIM	0 to 70	LS365A
SN74LS365ADR.A	Active	Production	SOIC (D) | 16	2500 | LARGE T&R	Yes	NIPDAU	Level-1-260C-UNLIM	0 to 70	LS365A
SN74LS365ADR.A	Active	Production	SOIC (D) | 16	2500 | LARGE T&R	Yes	NIPDAU	Level-1-260C-UNLIM	0 to 70	LS365A
SN74LS365AN	Active	Production	PDIP (N) | 16	25 | TUBE	Yes	NIPDAU	N/A for Pkg Type	0 to 70	SN74LS365AN
SN74LS365AN	Active	Production	PDIP (N) | 16	25 | TUBE	Yes	NIPDAU	N/A for Pkg Type	0 to 70	SN74LS365AN
SN74LS365AN.A	Active	Production	PDIP (N) | 16	25 | TUBE	Yes	NIPDAU	N/A for Pkg Type	0 to 70	SN74LS365AN
SN74LS365AN.A	Active	Production	PDIP (N) | 16	25 | TUBE	Yes	NIPDAU	N/A for Pkg Type	0 to 70	SN74LS365AN
SN74LS365ANSR	Active	Production	SOP (NS) | 16	2000 | LARGE T&R	Yes	NIPDAU	Level-1-260C-UNLIM	0 to 70	74LS365A
SN74LS365ANSR	Active	Production	SOP (NS) | 16	2000 | LARGE T&R	Yes	NIPDAU	Level-1-260C-UNLIM	0 to 70	74LS365A
SN74LS365ANSR.A	Active	Production	SOP (NS) | 16	2000 | LARGE T&R	Yes	NIPDAU	Level-1-260C-UNLIM	0 to 70	74LS365A
SN74LS365ANSR.A	Active	Production	SOP (NS) | 16	2000 | LARGE T&R	Yes	NIPDAU	Level-1-260C-UNLIM	0 to 70	74LS365A
SN74LS367AD	Obsolete	Production	SOIC (D) | 16	-	-	Call TI	Call TI	0 to 70	LS367A
SN74LS367AD	Obsolete	Production	SOIC (D) | 16	-	-	Call TI	Call TI	0 to 70	LS367A
SN74LS367ADR	Active	Production	SOIC (D) | 16	2500 | LARGE T&R	Yes	NIPDAU	Level-1-260C-UNLIM	0 to 70	LS367A
SN74LS367ADR	Active	Production	SOIC (D) | 16	2500 | LARGE T&R	Yes	NIPDAU	Level-1-260C-UNLIM	0 to 70	LS367A
SN74LS367ADR.A	Active	Production	SOIC (D) | 16	2500 | LARGE T&R	Yes	NIPDAU	Level-1-260C-UNLIM	0 to 70	LS367A
SN74LS367ADR.A	Active	Production	SOIC (D) | 16	2500 | LARGE T&R	Yes	NIPDAU	Level-1-260C-UNLIM	0 to 70	LS367A
SN74LS367AN	Active	Production	PDIP (N) | 16	25 | TUBE	Yes	NIPDAU	N/A for Pkg Type	0 to 70	SN74LS367AN
SN74LS367AN	Active	Production	PDIP (N) | 16	25 | TUBE	Yes	NIPDAU	N/A for Pkg Type	0 to 70	SN74LS367AN
SN74LS367AN.A	Active	Production	PDIP (N) | 16	25 | TUBE	Yes	NIPDAU	N/A for Pkg Type	0 to 70	SN74LS367AN

Orderable part number	Status (1)	Material type (2)	Package | Pins	Package qty | Carrier	RoHS (3)	Lead finish/ Ball material (4)	MSL rating/ Peak reflow (5)	Op temp (°C)	Part marking (6)
SN74LS367AN.A	Active	Production	PDIP (N) | 16	25 | TUBE	Yes	NIPDAU	N/A for Pkg Type	0 to 70	SN74LS367AN
SN74LS367ANE4	Active	Production	PDIP (N) | 16	25 | TUBE	Yes	NIPDAU	N/A for Pkg Type	0 to 70	SN74LS367AN
SN74LS367ANE4	Active	Production	PDIP (N) | 16	25 | TUBE	Yes	NIPDAU	N/A for Pkg Type	0 to 70	SN74LS367AN
SN74LS367ANSR	Active	Production	SOP (NS) | 16	2000 | LARGE T&R	Yes	NIPDAU	Level-1-260C-UNLIM	0 to 70	74LS367A
SN74LS367ANSR	Active	Production	SOP (NS) | 16	2000 | LARGE T&R	Yes	NIPDAU	Level-1-260C-UNLIM	0 to 70	74LS367A
SN74LS367ANSR.A	Active	Production	SOP (NS) | 16	2000 | LARGE T&R	Yes	NIPDAU	Level-1-260C-UNLIM	0 to 70	74LS367A
SN74LS367ANSR.A	Active	Production	SOP (NS) | 16	2000 | LARGE T&R	Yes	NIPDAU	Level-1-260C-UNLIM	0 to 70	74LS367A
SN74LS368AD	Active	Production	SOIC (D) | 16	40 | TUBE	Yes	NIPDAU	Level-1-260C-UNLIM	0 to 70	LS368A
SN74LS368AD	Active	Production	SOIC (D) | 16	40 | TUBE	Yes	NIPDAU	Level-1-260C-UNLIM	0 to 70	LS368A
SN74LS368AD.A	Active	Production	SOIC (D) | 16	40 | TUBE	Yes	NIPDAU	Level-1-260C-UNLIM	0 to 70	LS368A
SN74LS368AD.A	Active	Production	SOIC (D) | 16	40 | TUBE	Yes	NIPDAU	Level-1-260C-UNLIM	0 to 70	LS368A
SN74LS368AN	Active	Production	PDIP (N) | 16	25 | TUBE	Yes	NIPDAU	N/A for Pkg Type	0 to 70	SN74LS368AN
SN74LS368AN	Active	Production	PDIP (N) | 16	25 | TUBE	Yes	NIPDAU	N/A for Pkg Type	0 to 70	SN74LS368AN
SN74LS368AN.A	Active	Production	PDIP (N) | 16	25 | TUBE	Yes	NIPDAU	N/A for Pkg Type	0 to 70	SN74LS368AN
SN74LS368AN.A	Active	Production	PDIP (N) | 16	25 | TUBE	Yes	NIPDAU	N/A for Pkg Type	0 to 70	SN74LS368AN
SN74LS368ANSR	Active	Production	SOP (NS) | 16	2000 | LARGE T&R	Yes	NIPDAU	Level-1-260C-UNLIM	0 to 70	74LS368A
SN74LS368ANSR	Active	Production	SOP (NS) | 16	2000 | LARGE T&R	Yes	NIPDAU	Level-1-260C-UNLIM	0 to 70	74LS368A
SN74LS368ANSR.A	Active	Production	SOP (NS) | 16	2000 | LARGE T&R	Yes	NIPDAU	Level-1-260C-UNLIM	0 to 70	74LS368A
SN74LS368ANSR.A	Active	Production	SOP (NS) | 16	2000 | LARGE T&R	Yes	NIPDAU	Level-1-260C-UNLIM	0 to 70	74LS368A
SNJ54LS365AFK	Active	Production	LCCC (FK) | 20	55 | TUBE	No	SNPB	N/A for Pkg Type	-55 to 125	SNJ54LS 365AFK
SNJ54LS365AFK	Active	Production	LCCC (FK) | 20	55 | TUBE	No	SNPB	N/A for Pkg Type	-55 to 125	SNJ54LS 365AFK
SNJ54LS365AFK.A	Active	Production	LCCC (FK) | 20	55 | TUBE	No	SNPB	N/A for Pkg Type	-55 to 125	SNJ54LS 365AFK
SNJ54LS365AFK.A	Active	Production	LCCC (FK) | 20	55 | TUBE	No	SNPB	N/A for Pkg Type	-55 to 125	SNJ54LS 365AFK
SNJ54LS365AJ	Active	Production	CDIP (J) | 16	25 | TUBE	No	SNPB	N/A for Pkg Type	-55 to 125	SNJ54LS365AJ
SNJ54LS365AJ	Active	Production	CDIP (J) | 16	25 | TUBE	No	SNPB	N/A for Pkg Type	-55 to 125	SNJ54LS365AJ
SNJ54LS365AJ.A	Active	Production	CDIP (J) | 16	25 | TUBE	No	SNPB	N/A for Pkg Type	-55 to 125	SNJ54LS365AJ
SNJ54LS365AJ.A	Active	Production	CDIP (J) | 16	25 | TUBE	No	SNPB	N/A for Pkg Type	-55 to 125	SNJ54LS365AJ

Orderable part number	Status (1)	Material type (2)	Package | Pins	Package qty | Carrier	RoHS (3)	Lead finish/ Ball material (4)	MSL rating/ Peak reflow (5)	Op temp (°C)	Part marking (6)
SNJ54LS366AFK	Active	Production	LCCC (FK) | 20	55 | TUBE	No	SNPB	N/A for Pkg Type	-55 to 125	SNJ54LS 366AFK
SNJ54LS366AFK	Active	Production	LCCC (FK) | 20	55 | TUBE	No	SNPB	N/A for Pkg Type	-55 to 125	SNJ54LS 366AFK
SNJ54LS366AFK.A	Active	Production	LCCC (FK) | 20	55 | TUBE	No	SNPB	N/A for Pkg Type	-55 to 125	SNJ54LS 366AFK
SNJ54LS366AFK.A	Active	Production	LCCC (FK) | 20	55 | TUBE	No	SNPB	N/A for Pkg Type	-55 to 125	SNJ54LS 366AFK
SNJ54LS366AJ	Active	Production	CDIP (J) | 16	25 | TUBE	No	SNPB	N/A for Pkg Type	-55 to 125	SNJ54LS366AJ
SNJ54LS366AJ	Active	Production	CDIP (J) | 16	25 | TUBE	No	SNPB	N/A for Pkg Type	-55 to 125	SNJ54LS366AJ
SNJ54LS366AJ.A	Active	Production	CDIP (J) | 16	25 | TUBE	No	SNPB	N/A for Pkg Type	-55 to 125	SNJ54LS366AJ
SNJ54LS366AJ.A	Active	Production	CDIP (J) | 16	25 | TUBE	No	SNPB	N/A for Pkg Type	-55 to 125	SNJ54LS366AJ
SNJ54LS367AJ	Active	Production	CDIP (J) | 16	25 | TUBE	No	SNPB	N/A for Pkg Type	-55 to 125	SNJ54LS367AJ
SNJ54LS367AJ	Active	Production	CDIP (J) | 16	25 | TUBE	No	SNPB	N/A for Pkg Type	-55 to 125	SNJ54LS367AJ
SNJ54LS367AJ.A	Active	Production	CDIP (J) | 16	25 | TUBE	No	SNPB	N/A for Pkg Type	-55 to 125	SNJ54LS367AJ
SNJ54LS367AJ.A	Active	Production	CDIP (J) | 16	25 | TUBE	No	SNPB	N/A for Pkg Type	-55 to 125	SNJ54LS367AJ
SNJ54LS368AJ	Active	Production	CDIP (J) | 16	25 | TUBE	No	SNPB	N/A for Pkg Type	-55 to 125	SNJ54LS368AJ
SNJ54LS368AJ	Active	Production	CDIP (J) | 16	25 | TUBE	No	SNPB	N/A for Pkg Type	-55 to 125	SNJ54LS368AJ
SNJ54LS368AJ.A	Active	Production	CDIP (J) | 16	25 | TUBE	No	SNPB	N/A for Pkg Type	-55 to 125	SNJ54LS368AJ
SNJ54LS368AJ.A	Active	Production	CDIP (J) | 16	25 | TUBE	No	SNPB	N/A for Pkg Type	-55 to 125	SNJ54LS368AJ
SNJ54LS368AW	Active	Production	CFP (W) | 16	25 | TUBE	No	SNPB	N/A for Pkg Type	-55 to 125	SNJ54LS368AW
SNJ54LS368AW	Active	Production	CFP (W) | 16	25 | TUBE	No	SNPB	N/A for Pkg Type	-55 to 125	SNJ54LS368AW
SNJ54LS368AW.A	Active	Production	CFP (W) | 16	25 | TUBE	No	SNPB	N/A for Pkg Type	-55 to 125	SNJ54LS368AW
SNJ54LS368AW.A	Active	Production	CFP (W) | 16	25 | TUBE	No	SNPB	N/A for Pkg Type	-55 to 125	SNJ54LS368AW

(1) **Status:** For more details on status, see our product life cycle.

(2) **Material type:** When designated, preproduction parts are prototypes/experimental devices, and are not yet approved or released for full production. Testing and final process, including without limitation quality assurance, reliability performance testing, and/or process qualification, may not yet be complete, and this item is subject to further changes or possible discontinuation. If available for ordering, purchases will be subject to an additional waiver at checkout, and are intended for early internal evaluation purposes only. These items are sold without warranties of any kind.

(3) **RoHS values:** Yes, No, RoHS Exempt. See the TI RoHS Statement for additional information and value definition.

(4) **Lead finish/Ball material:** Parts may have multiple material finish options. Finish options are separated by a vertical ruled line. Lead finish/Ball material values may wrap to two lines if the finish value exceeds the maximum column width.

(5) **MSL rating/Peak reflow:** The moisture sensitivity level ratings and peak solder (reflow) temperatures. In the event that a part has multiple moisture sensitivity ratings, only the lowest level per JEDEC standards is shown. Refer to the shipping label for the actual reflow temperature that will be used to mount the part to the printed circuit board.

(6) **Part marking:** There may be an additional marking, which relates to the logo, the lot trace code information, or the environmental category of the part.

Multiple part markings will be inside parentheses. Only one part marking contained in parentheses and separated by a "~" will appear on a part. If a line is indented then it is a continuation of the previous line and the two combined represent the entire part marking for that device.

Important Information and Disclaimer: The information provided on this page represents TI's knowledge and belief as of the date that it is provided. TI bases its knowledge and belief on information provided by third parties, and makes no representation or warranty as to the accuracy of such information. Efforts are underway to better integrate information from third parties. TI has taken and continues to take reasonable steps to provide representative and accurate information but may not have conducted destructive testing or chemical analysis on incoming materials and chemicals. TI and TI suppliers consider certain information to be proprietary, and thus CAS numbers and other limited information may not be available for release.

In no event shall TI's liability arising out of such information exceed the total purchase price of the TI part(s) at issue in this document sold by TI to Customer on an annual basis.

OTHER QUALIFIED VERSIONS OF SN54LS365A, SN54LS367A, SN54LS368A, SN74LS365A, SN74LS367A, SN74LS368A :

- Catalog : SN74LS365A, SN74LS367A, SN74LS368A
- Military : SN54LS365A, SN54LS367A, SN54LS368A

NOTE: Qualified Version Definitions:

- Catalog - TI's standard catalog product
- Military - QML certified for Military and Defense Applications

TAPE AND REEL INFORMATION

REEL DIMENSIONS

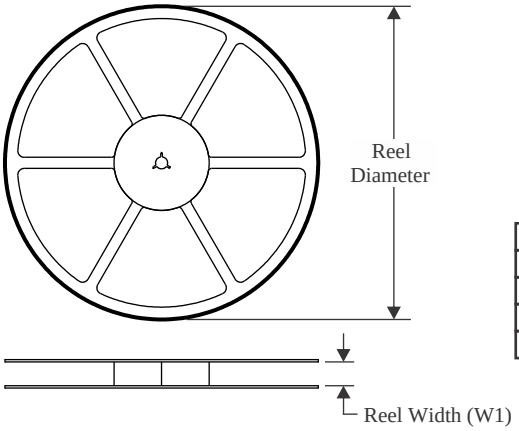

TAPE DIMENSIONS

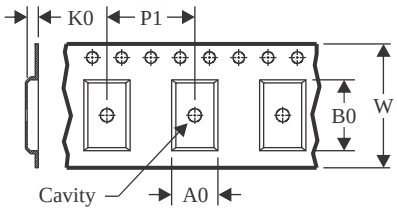

A0	Dimension designed to accommodate the component width
B0	Dimension designed to accommodate the component length
K0	Dimension designed to accommodate the component thickness
W	Overall width of the carrier tape
P1	Pitch between successive cavity centers

QUADRANT ASSIGNMENTS FOR PIN 1 ORIENTATION IN TAPE

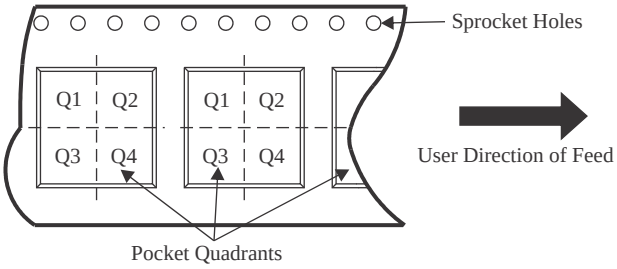

*All dimensions are nominal

Device	Package Type	Package Drawing	Pins	SPQ	Reel Diameter (mm)	Reel Width W1 (mm)	A0 (mm)	B0 (mm)	K0 (mm)	P1 (mm)	W (mm)	Pin1 Quadrant
SN74LS365ADR	SOIC	D	16	2500	330.0	16.4	6.5	10.3	2.1	8.0	16.0	Q1
SN74LS365ANSR	SOP	NS	16	2000	330.0	16.4	8.1	10.4	2.5	12.0	16.0	Q1
SN74LS367ADR	SOIC	D	16	2500	330.0	16.4	6.5	10.3	2.1	8.0	16.0	Q1
SN74LS367ANSR	SOP	NS	16	2000	330.0	16.4	8.1	10.4	2.5	12.0	16.0	Q1
SN74LS368ANSR	SOP	NS	16	2000	330.0	16.4	8.1	10.4	2.5	12.0	16.0	Q1

TAPE AND REEL BOX DIMENSIONS

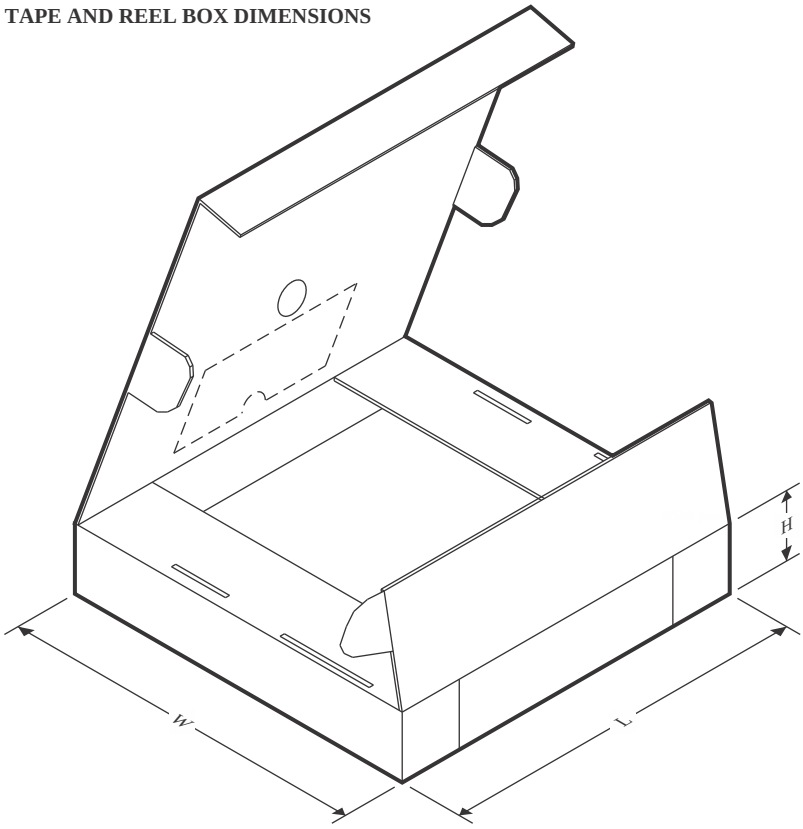

*All dimensions are nominal

Device	Package Type	Package Drawing	Pins	SPQ	Length (mm)	Width (mm)	Height (mm)
SN74LS365ADR	SOIC	D	16	2500	353.0	353.0	32.0
SN74LS365ANSR	SOP	NS	16	2000	353.0	353.0	32.0
SN74LS367ADR	SOIC	D	16	2500	340.5	336.1	32.0
SN74LS367ANSR	SOP	NS	16	2000	353.0	353.0	32.0
SN74LS368ANSR	SOP	NS	16	2000	353.0	353.0	32.0

TUBE

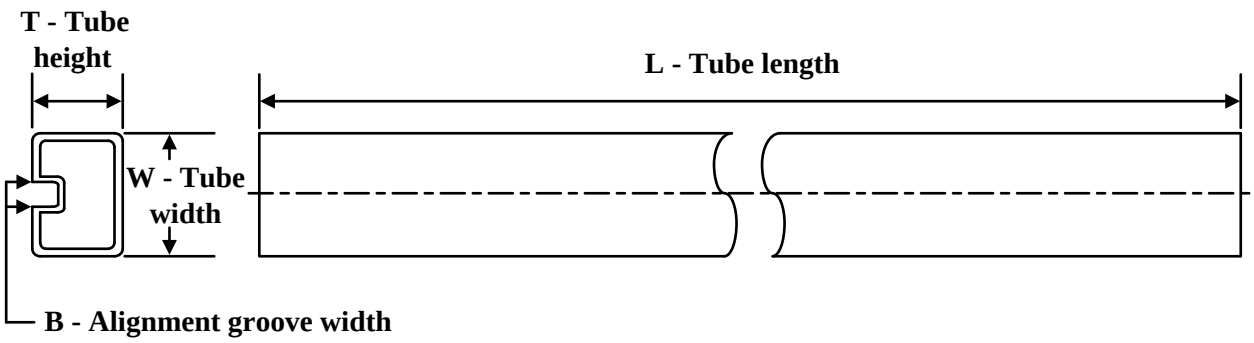

*All dimensions are nominal

Device	Package Name	Package Type	Pins	SPQ	L (mm)	W (mm)	T (µm)	B (mm)
JM38510/32201B2A	FK	LCCC	20	55	506.98	12.06	2030	NA
JM38510/32201B2A.A	FK	LCCC	20	55	506.98	12.06	2030	NA
JM38510/32203B2A	FK	LCCC	20	55	506.98	12.06	2030	NA
JM38510/32203B2A.A	FK	LCCC	20	55	506.98	12.06	2030	NA
JM38510/32203BFA	W	CFP	16	25	506.98	26.16	6220	NA
JM38510/32203BFA.A	W	CFP	16	25	506.98	26.16	6220	NA
M38510/32201B2A	FK	LCCC	20	55	506.98	12.06	2030	NA
M38510/32203B2A	FK	LCCC	20	55	506.98	12.06	2030	NA
M38510/32203BFA	W	CFP	16	25	506.98	26.16	6220	NA
SN74LS365AN	N	PDIP	16	25	506	13.97	11230	4.32
SN74LS365AN	N	PDIP	16	25	506	13.97	11230	4.32
SN74LS365AN.A	N	PDIP	16	25	506	13.97	11230	4.32
SN74LS365AN.A	N	PDIP	16	25	506	13.97	11230	4.32
SN74LS367AN	N	PDIP	16	25	506	13.97	11230	4.32
SN74LS367AN	N	PDIP	16	25	506	13.97	11230	4.32
SN74LS367AN.A	N	PDIP	16	25	506	13.97	11230	4.32
SN74LS367AN.A	N	PDIP	16	25	506	13.97	11230	4.32
SN74LS367ANE4	N	PDIP	16	25	506	13.97	11230	4.32
SN74LS367ANE4	N	PDIP	16	25	506	13.97	11230	4.32
SN74LS368AD	D	SOIC	16	40	507	8	3940	4.32
SN74LS368AD.A	D	SOIC	16	40	507	8	3940	4.32
SN74LS368AN	N	PDIP	16	25	506	13.97	11230	4.32
SN74LS368AN	N	PDIP	16	25	506	13.97	11230	4.32
SN74LS368AN.A	N	PDIP	16	25	506	13.97	11230	4.32
SN74LS368AN.A	N	PDIP	16	25	506	13.97	11230	4.32
SNJ54LS365AFK	FK	LCCC	20	55	506.98	12.06	2030	NA
SNJ54LS365AFK.A	FK	LCCC	20	55	506.98	12.06	2030	NA
SNJ54LS366AFK	FK	LCCC	20	55	506.98	12.06	2030	NA
SNJ54LS366AFK.A	FK	LCCC	20	55	506.98	12.06	2030	NA

Device	Package Name	Package Type	Pins	SPQ	L (mm)	W (mm)	T (µm)	B (mm)
SNJ54LS368AW	W	CFP	16	25	506.98	26.16	6220	NA
SNJ54LS368AW.A	W	CFP	16	25	506.98	26.16	6220	NA

N (R–PDIP–T**) PLASTIC DUAL–IN–LINE PACKAGE

16 PINS SHOWN

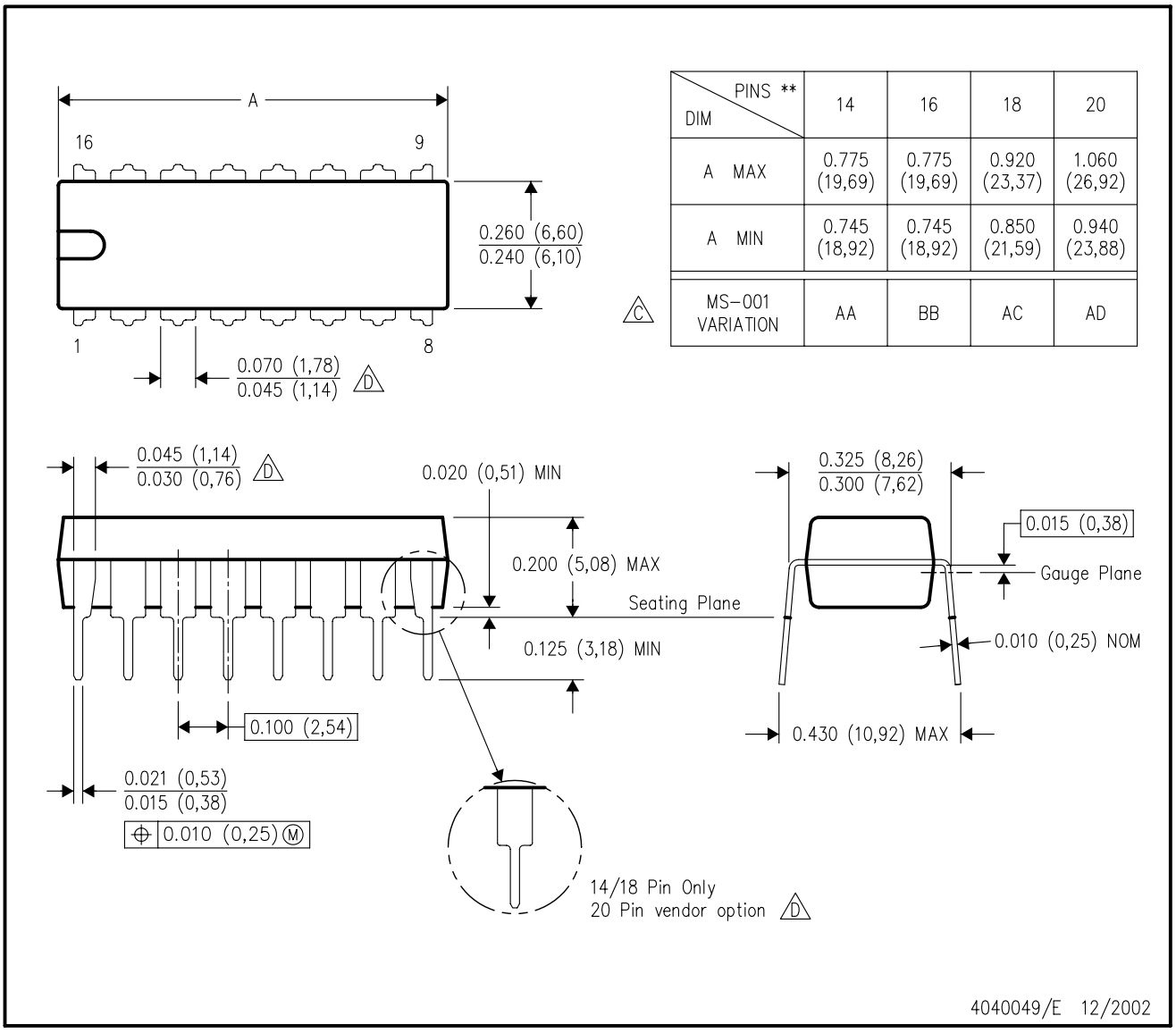

DIM \ PINS **	14	16	18	20
A MAX	0.775 (19,69)	0.775 (19,69)	0.920 (23,37)	1.060 (26,92)
A MIN	0.745 (18,92)	0.745 (18,92)	0.850 (21,59)	0.940 (23,88)
MS–001 VARIATION (C)	AA	BB	AC	AD

NOTES:
A. All linear dimensions are in inches (millimeters).
B. This drawing is subject to change without notice.
C. Falls within JEDEC MS–001, except 18 and 20 pin minimum body length (Dim A).
D. The 20 pin end lead shoulder width is a vendor option, either half or full width.

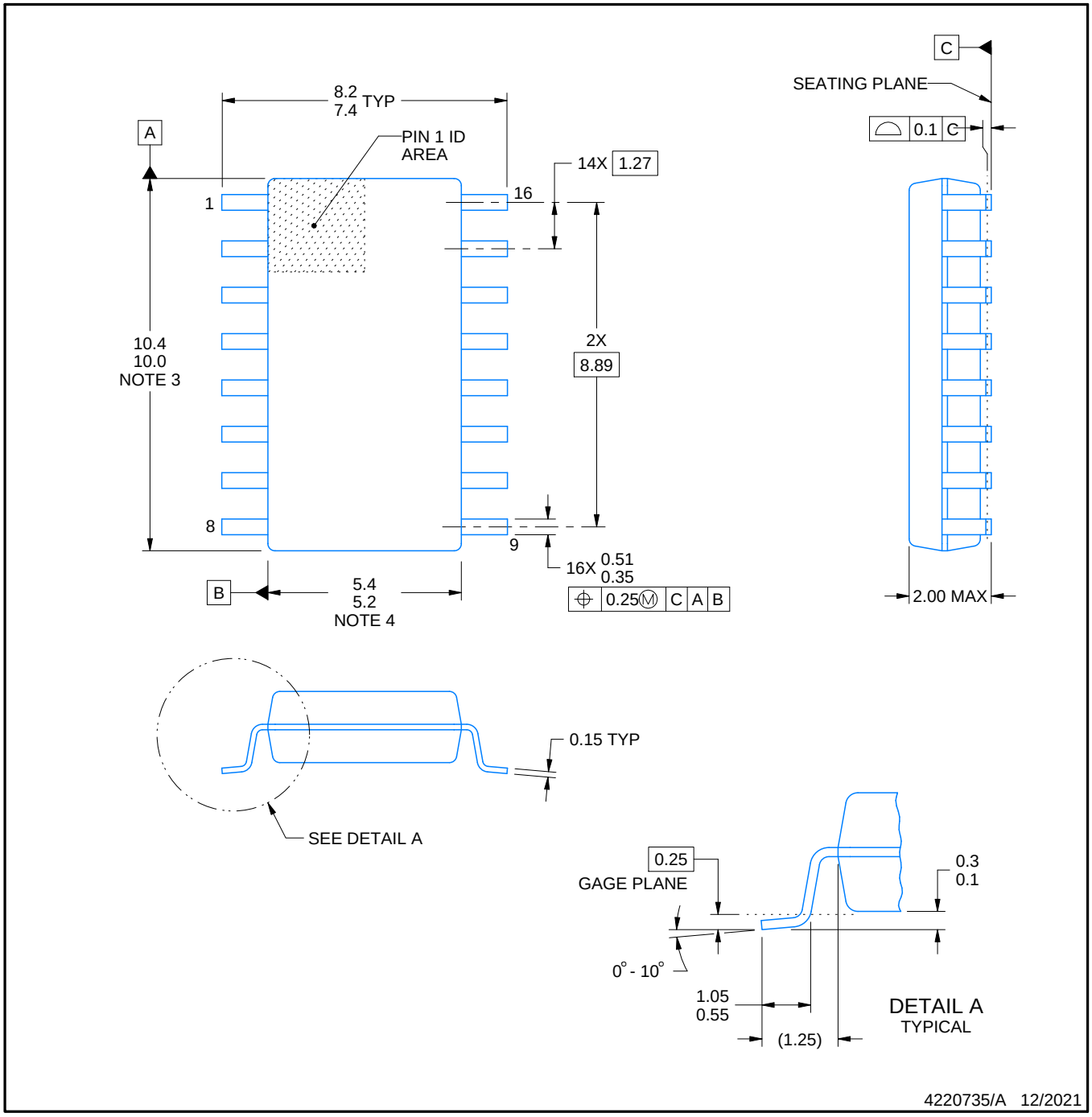

NOTES:

1. All linear dimensions are in millimeters. Dimensions in parenthesis are for reference only. Dimensioning and tolerancing per ASME Y14.5M.
2. This drawing is subject to change without notice.
3. This dimension does not include mold flash, protrusions, or gate burrs. Mold flash, protrusions, or gate burrs shall not exceed 0.15 mm, per side.
4. This dimension does not include interlead flash. Interlead flash shall not exceed 0.25 mm, per side.

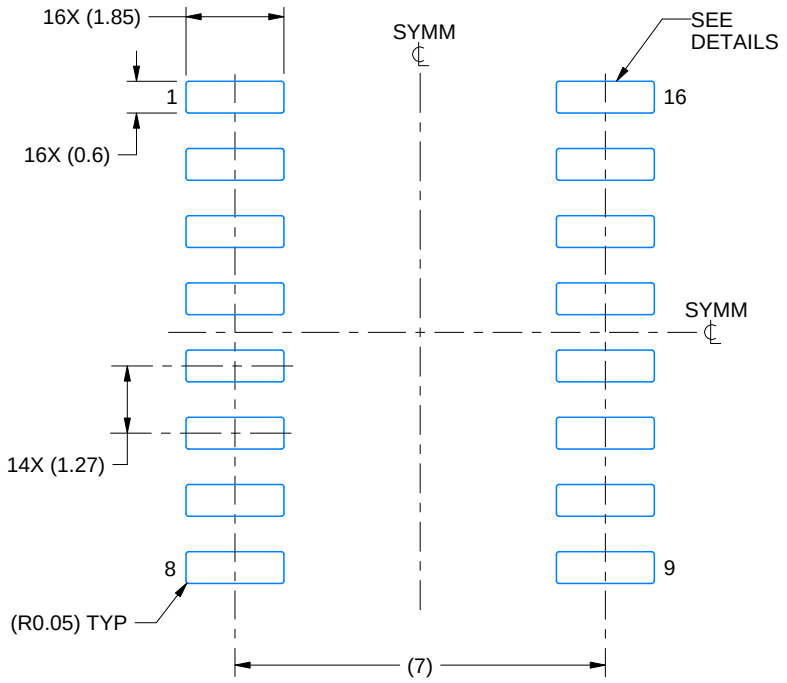

LAND PATTERN EXAMPLE
SCALE:7X

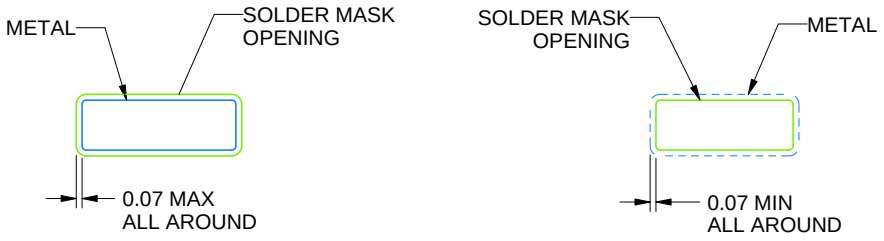

NON SOLDER MASK DEFINED

SOLDER MASK DEFINED

SOLDER MASK DETAILS

4220735/A 12/2021

NOTES: (continued)

5. Publication IPC-7351 may have alternate designs.
6. Solder mask tolerances between and around signal pads can vary based on board fabrication site.

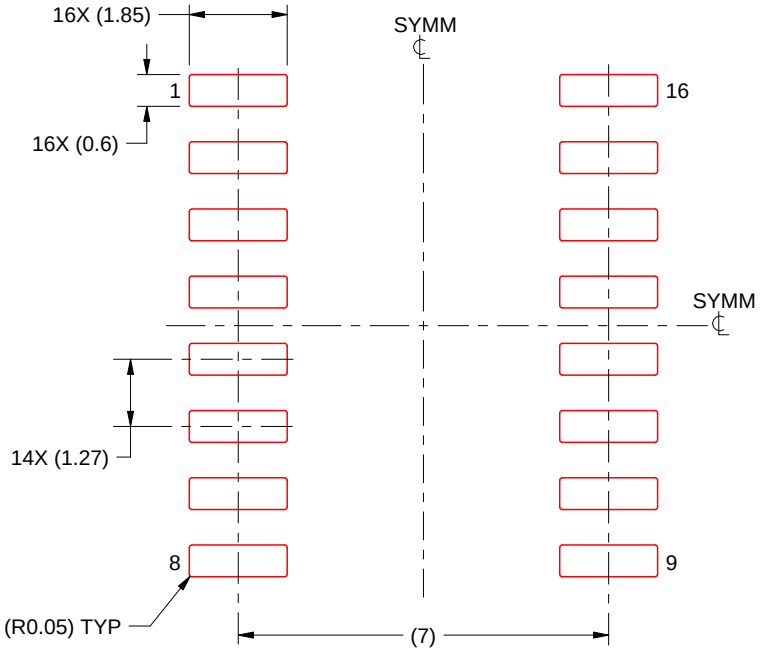

SOLDER PASTE EXAMPLE
BASED ON 0.125 mm THICK STENCIL
SCALE:7X

4220735/A 12/2021

NOTES: (continued)

7. Laser cutting apertures with trapezoidal walls and rounded corners may offer better paste release. IPC-7525 may have alternate design recommendations.
8. Board assembly site may have different recommendations for stencil design.

D (R–PDSO–G16) PLASTIC SMALL OUTLINE

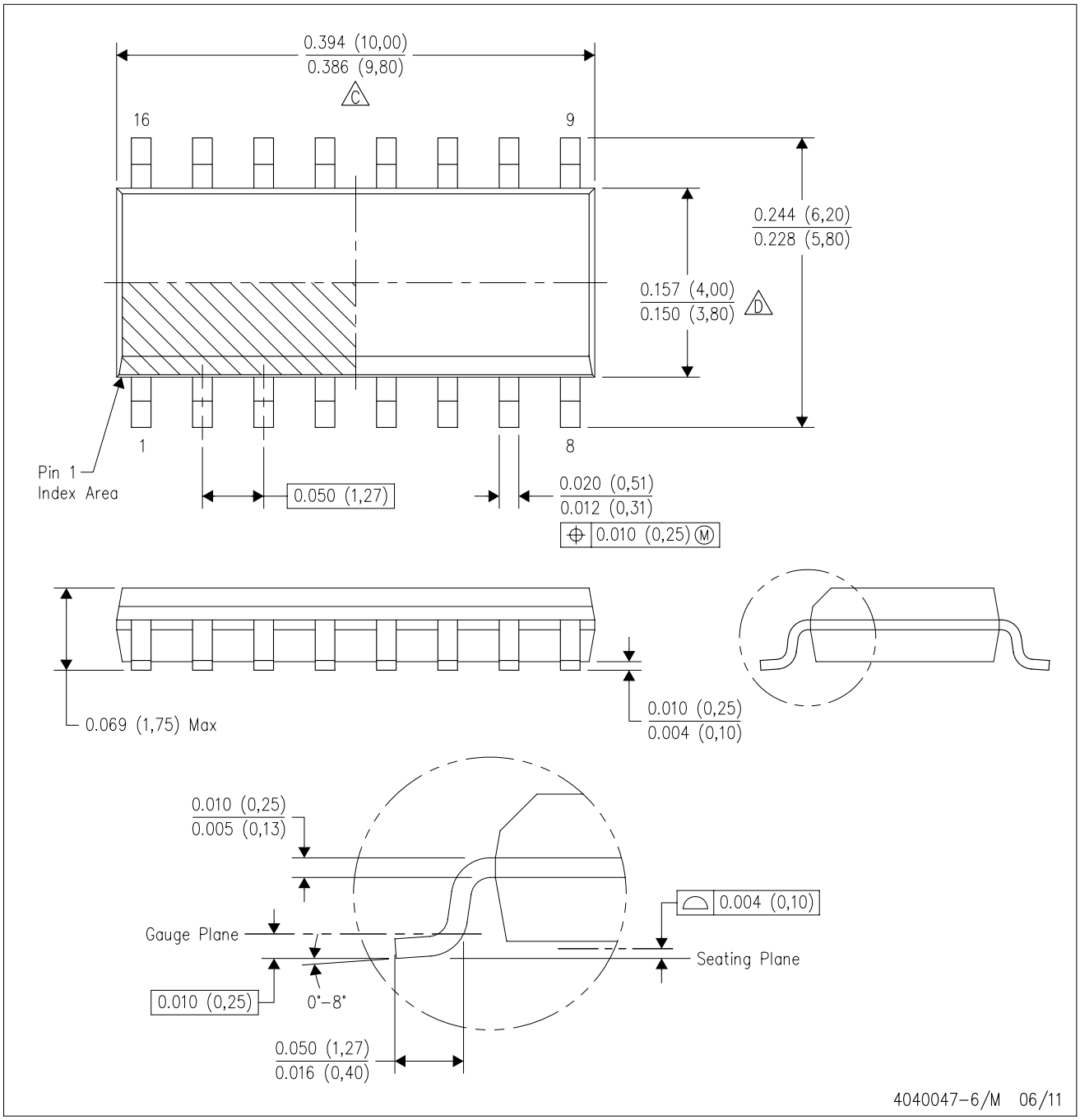

NOTES:
A. All linear dimensions are in inches (millimeters).
B. This drawing is subject to change without notice.
C. Body length does not include mold flash, protrusions, or gate burrs. Mold flash, protrusions, or gate burrs shall not exceed 0.006 (0,15) each side.
D. Body width does not include interlead flash. Interlead flash shall not exceed 0.017 (0,43) each side.
E. Reference JEDEC MS–012 variation AC.

W (R–GDFP–F16) CERAMIC DUAL FLATPACK

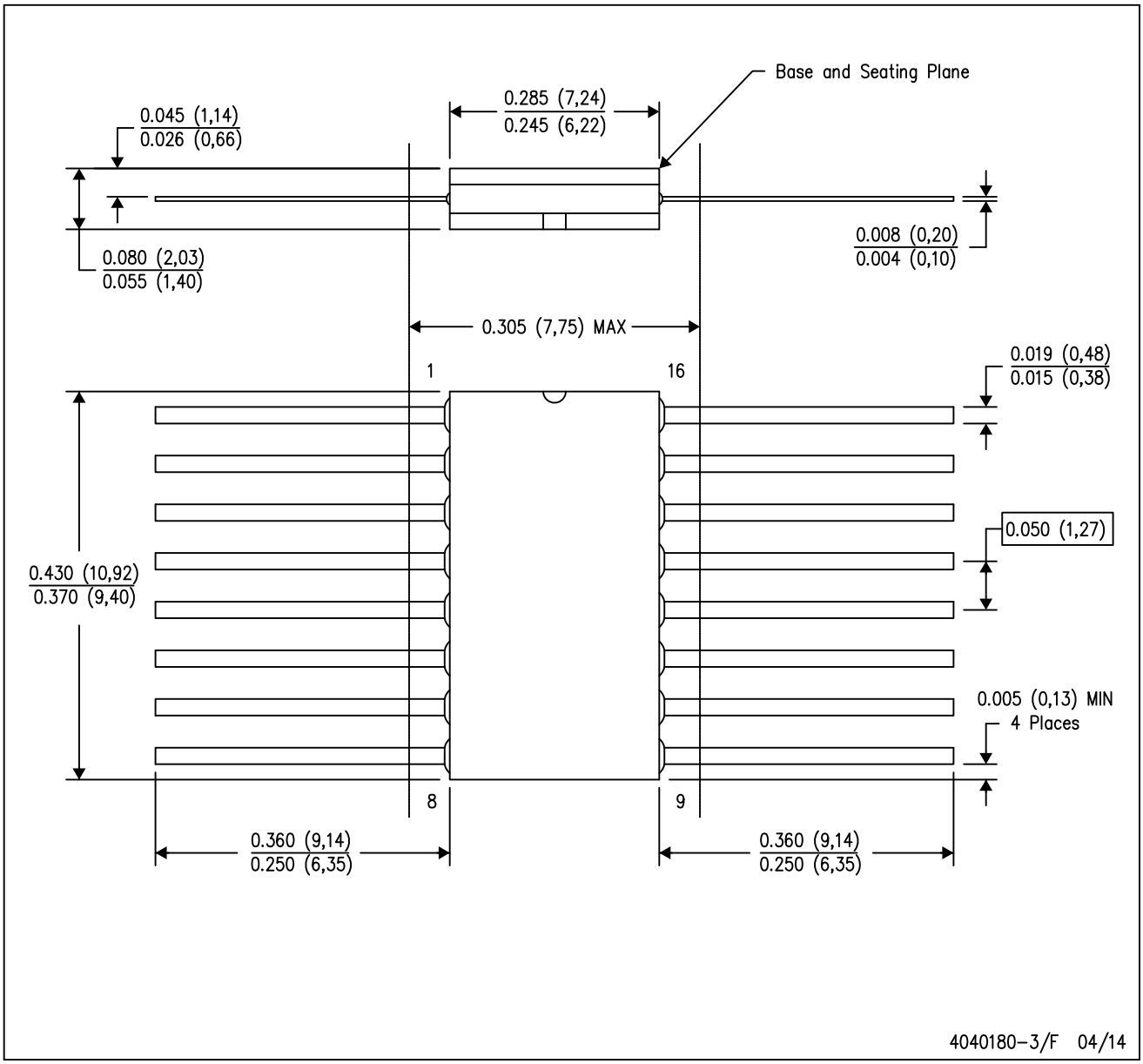

NOTES:
A. All linear dimensions are in inches (millimeters).
B. This drawing is subject to change without notice.
C. This package can be hermetically sealed with a ceramic lid using glass frit.
D. Index point is provided on cap for terminal identification only.
E. Falls within MIL STD 1835 GDFP2–F16

GENERIC PACKAGE VIEW

FK 20

LCCC - 2.03 mm max height

8.89 x 8.89, 1.27 mm pitch

LEADLESS CERAMIC CHIP CARRIER

This image is a representation of the package family, actual package may vary.
Refer to the product data sheet for package details.

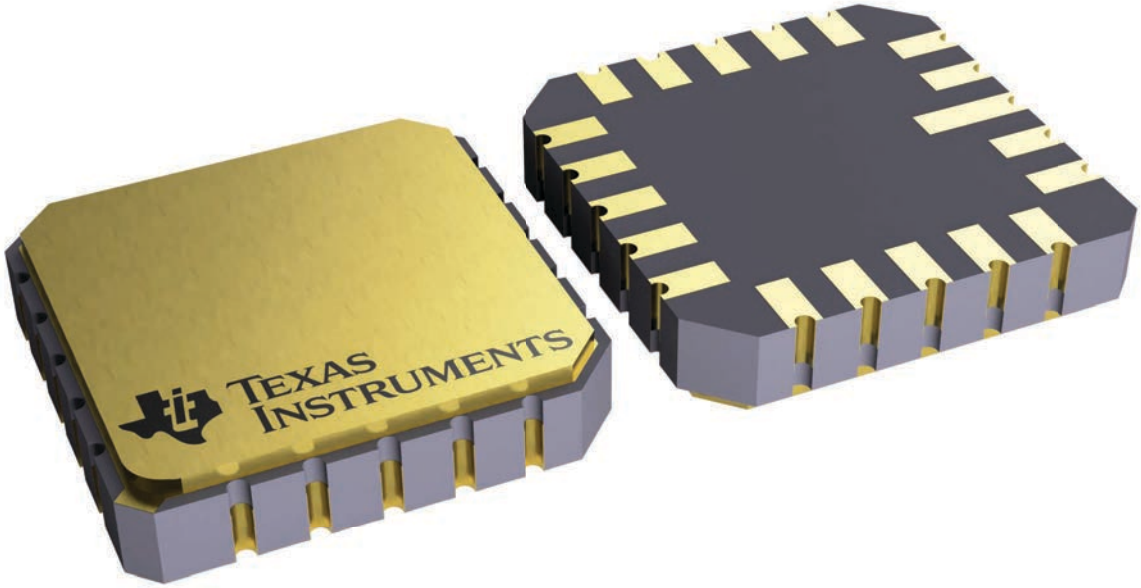

4229370VA\

J (R–GDIP–T**) CERAMIC DUAL IN–LINE PACKAGE

14 LEADS SHOWN

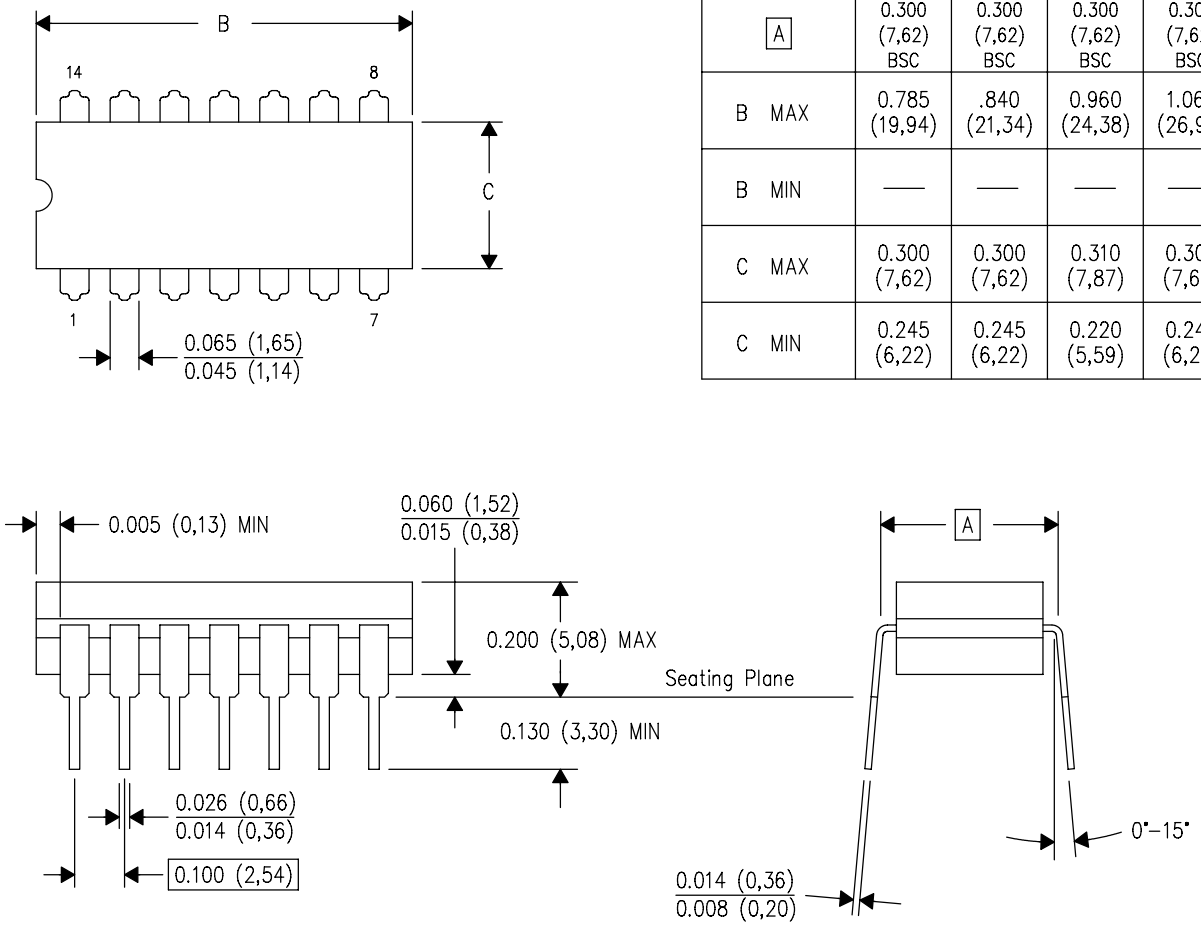

DIM \ PINS **	14	16	18	20
A	0.300 (7,62) BSC	0.300 (7,62) BSC	0.300 (7,62) BSC	0.300 (7,62) BSC
B MAX	0.785 (19,94)	.840 (21,34)	0.960 (24,38)	1.060 (26,92)
B MIN	—	—	—	—
C MAX	0.300 (7,62)	0.300 (7,62)	0.310 (7,87)	0.300 (7,62)
C MIN	0.245 (6,22)	0.245 (6,22)	0.220 (5,59)	0.245 (6,22)

4040083/F 03/03

NOTES:
- A. All linear dimensions are in inches (millimeters).
- B. This drawing is subject to change without notice.
- C. This package is hermetically sealed with a ceramic lid using glass frit.
- D. Index point is provided on cap for terminal identification only on press ceramic glass frit seal only.
- E. Falls within MIL STD 1835 GDIP1–T14, GDIP1–T16, GDIP1–T18 and GDIP1–T20.

IMPORTANT NOTICE AND DISCLAIMER

TI PROVIDES TECHNICAL AND RELIABILITY DATA (INCLUDING DATASHEETS), DESIGN RESOURCES (INCLUDING REFERENCE DESIGNS), APPLICATION OR OTHER DESIGN ADVICE, WEB TOOLS, SAFETY INFORMATION, AND OTHER RESOURCES “AS IS” AND WITH ALL FAULTS, AND DISCLAIMS ALL WARRANTIES, EXPRESS AND IMPLIED, INCLUDING WITHOUT LIMITATION ANY IMPLIED WARRANTIES OF MERCHANTABILITY, FITNESS FOR A PARTICULAR PURPOSE OR NON-INFRINGEMENT OF THIRD PARTY INTELLECTUAL PROPERTY RIGHTS.

These resources are intended for skilled developers designing with TI products. You are solely responsible for (1) selecting the appropriate TI products for your application, (2) designing, validating and testing your application, and (3) ensuring your application meets applicable standards, and any other safety, security, regulatory or other requirements.

These resources are subject to change without notice. TI grants you permission to use these resources only for development of an application that uses the TI products described in the resource. Other reproduction and display of these resources is prohibited. No license is granted to any other TI intellectual property right or to any third party intellectual property right. TI disclaims responsibility for, and you fully indemnify TI and its representatives against any claims, damages, costs, losses, and liabilities arising out of your use of these resources.

TI’s products are provided subject to TI’s Terms of Sale, TI’s General Quality Guidelines, or other applicable terms available either on ti.com or provided in conjunction with such TI products. TI’s provision of these resources does not expand or otherwise alter TI’s applicable warranties or warranty disclaimers for TI products. Unless TI explicitly designates a product as custom or customer-specified, TI products are standard, catalog, general purpose devices.

TI objects to and rejects any additional or different terms you may propose.

Copyright © 2026, Texas Instruments Incorporated

Last updated 10/2025