SNx4HC245 Octal Bus Transceivers With 3-State Outputs

1 Features

- Wide Operating Voltage Range of 2 V to 6 V
- High-Current 3-State Outputs Drive Bus Lines Directly or Up to 15 LSTTL Loads
- Low Power Consumption, 80-µA Max I_{CC}
- Typical t_{pd} = 12 ns
- ±6-mA Output Drive at 5 V
- Low Input Current of 1 µA Max
- On Products Compliant to MIL-PRF-38535, All Parameters Are Tested Unless Otherwise Noted. On All Other Products, Production Processing Does Not Necessarily Include Testing of All Parameters.

2 Applications

- Servers
- PCs and Notebooks
- Network Switches
- Wearable Health and Fitness Devices
- Telecom Infrastructures
- Electronic Points of Sale

3 Description

These octal bus transceivers are designed for asynchronous two-way communication between data buses. The control-function implementation minimizes external timing requirements.

The devices allow data transmission from the A bus to the B bus or from the B bus to the A bus, depending on the logic level at the direction-control (DIR) input. The output-enable ($\overline{OE}$) input can be used to disable the device so that the buses are effectively isolated.

Device Information(1)

PART NUMBER	PACKAGE	BODY SIZE (NOM)
SNx4HC245	DB (SSOP, 20)	7.20 mm × 5.30 mm
	DW (SOIC, 20)	12.80 mm × 7.50 mm
	N (PDIP, 20)	24.33 mm × 6.35 mm
	NS (SO, 20)	12.60 mm × 5.30 mm
	PW (TSSOP, 20)	6.50 mm × 4.40 mm

(1) For all available packages, see the orderable addendum at the end of the data sheet.

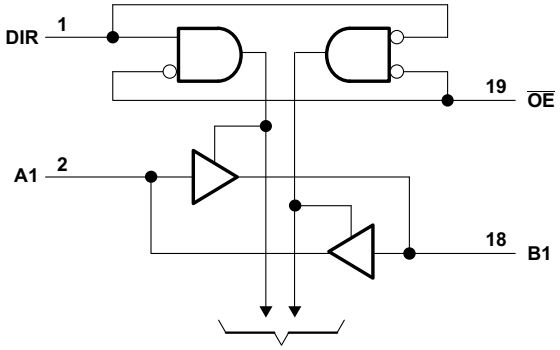

Logic Diagram (Positive Logic)

An IMPORTANT NOTICE at the end of this data sheet addresses availability, warranty, changes, use in safety-critical applications, intellectual property matters and other important disclaimers. PRODUCTION DATA.

Table of Contents

1 Features....1
2 Applications....1
3 Description....1
4 Revision History....2
5 Pin Configuration and Functions....3
6 Specifications....4
6.1 Absolute Maximum Ratings....4
6.2 ESD Ratings....4
6.3 Recommended Operating Conditions....4
6.4 Thermal Information....5
6.5 Electrical Characteristics....5
6.6 Switching Characteristics, C_L = 50 pF....6
6.7 Switching Characteristics, C_L = 150 pF....6
6.8 Operating Characteristics....7
6.9 Typical Characteristics....7
7 Parameter Measurement Information....8
8 Detailed Description....9
8.1 Overview....9
8.2 Functional Block Diagram....9
8.3 Feature Description....9
8.4 Device Functional Modes....9
9 Application and Implementation....10
9.1 Application Information....10
9.2 Typical Application....10
10 Power Supply Recommendations....12
11 Layout....12
11.1 Layout Guidelines....12
11.2 Layout Example....12
12 Device and Documentation Support....13
12.1 Related Links....13
12.2 Receiving Notification of Documentation Updates....13
12.3 Support Resources....13
12.4 Trademarks....13
12.5 Electrostatic Discharge Caution....13
12.6 Glossary....13
13 Mechanical, Packaging, and Orderable Information....13

4 Revision History

NOTE: Page numbers for previous revisions may differ from page numbers in the current version.

Changes from Revision E (September 2015) to Revision F (August 2022)	Page
• Updated the numbering, formatting, tables, figures and cross-references throughout the document to reflect modern datasheet standards	1

Changes from Revision D (August 2003) to Revision E (July 2015)	Page
• Added *Device Comparison* section, *Thermal Information*section , *ESD Ratings* section, *Application and Implementation* section, *Power Supply Recommendations* section, and *Layout* section	1
• Added Military Disclaimer to Features list	1
• Updated FK package pinout drawing	3

Copyright © 2022 Texas Instruments Incorporated

5 Pin Configuration and Functions

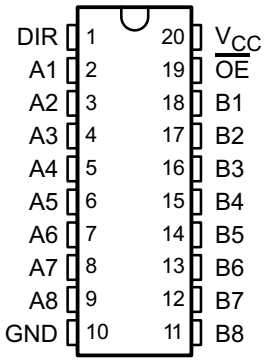

Figure 5-1. DB, DGV, DW, N, J, W, or PW Package 20-Pin SSOP, TVSOP, SOIC, PDIP CDIP, CFP, or TSSOP Top View

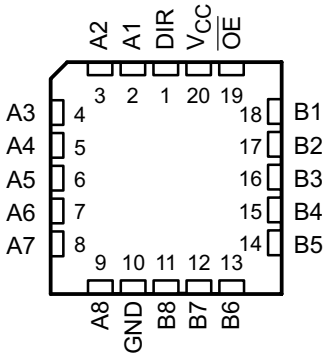

Figure 5-2. FK Package 20-Pin LCCC Top View

PIN		TYPE[1]	DESCRIPTION
NO.	NAME		
1	DIR	I/O	Direction Pin
2	A1	I/O	A1 Input/Output
3	A2	I/O	A2 Input/Output
4	A3	I/O	A3 Input/Output
5	A4	I/O	A4 Input/Output
6	A5	I/O	A5 Input/Output
7	A6	I/O	A6 Input/Output
8	A7	I/O	A7 Input/Output
9	A8	I/O	A8 Input/Output
10	GND	—	Ground Pin
11	B8	I/O	B8 Input/Output
12	B7	I/O	B7 Input/Output
13	B6	I/O	B6 Input/Output
14	B5	I/O	B5 Input/Output
15	B4	I/O	B4 Input/Output
16	B3	I/O	B3 Input/Output
17	B2	I/O	B2 Input/Output
18	B1	I/O	B1 Input/Output
19	OE	I/O	Output Enable
20	VCC	—	Power Pin

(1) Signal Types: I = Input, O = Output, I/O = Input or Output

Copyright © 2022 Texas Instruments Incorporated

6 Specifications

6.1 Absolute Maximum Ratings

over operating free-air temperature range (unless otherwise noted)(1)

			MIN	MAX	UNIT
V_{CC}	Supply voltage		−0.5	7	V
I_{IK}	Input clamp current(2)	$V_I < 0$ or $V_I > V_{CC}$		±20	mA
I_{OK}	Output clamp current(2)	$V_O < 0$ or $V_O > V_{CC}$		±20	mA
I_O	Continuous output current	$V_O = 0$ to V_{CC}		±35	mA
	Continuous current through V_{CC} or GND			±70	mA
T_{stg}	Storage temperature		–65	150	°C
T_J	Junction Temperature			150	°C

(1) Stresses beyond those listed under *Absolute Maximum Ratings* may cause permanent damage to the device. These are stress ratings only, and functional operation of the device at these or any other conditions beyond those indicated under *Recommended Operating Conditions* is not implied. Exposure to absolute-maximum-rated conditions for extended periods may affect device reliability.
(2) The input and output voltage ratings may be exceeded if the input and output current ratings are observed.

6.2 ESD Ratings

			VALUE	UNIT
$V_{(ESD)}$	Electrostatic discharge	Human body model (HBM), per ANSI/ESDA/JEDEC JS-001(1)	±3000	V
		Charged-device model (CDM), per JEDEC specification JESD22-C101(2)	±1000	

(1) JEDEC document JEP155 states that 500-V HBM allows safe manufacturing with a standard ESD control process.
(2) JEDEC document JEP157 states that 250-V CDM allows safe manufacturing with a standard ESD control process.

6.3 Recommended Operating Conditions

over operating free-air temperature range (unless otherwise noted)(1)

			SN54HC245			SN74HC245			UNIT
			MIN	NOM	MAX	MIN	NOM	MAX	
V_{CC}	Supply voltage		2	5	6	2	5	6	V
V_{IH}	High-level input voltage	V_{CC} = 2 V	1.5			1.5			V
		V_{CC} = 4.5 V	3.15			3.15			
		V_{CC} = 6 V	4.2			4.2			
V_{IL}	Low-level input voltage	V_{CC} = 2 V			0.5			0.5	V
		V_{CC} = 4.5 V			1.35			1.35	
		V_{CC} = 6 V			1.8			1.8	
V_I	Input voltage		0		V_{CC}	0		V_{CC}	V
V_O	Output voltage		0		V_{CC}	0		V_{CC}	V
$\Delta t/\Delta v$	Input transition rise and fall time	V_{CC} = 2 V			1000			1000	ns
		V_{CC} = 4.5 V			500			500	
		V_{CC} = 6 V			400			400	
T_A	Operating free-air temperature		–55		125	–40		85	°C

(1) All unused inputs of the device must be held at V_{CC} or GND to ensure proper device operation. Refer to the TI application report, *Implications of Slow or Floating CMOS Inputs,* literature number SCBA004.

Copyright © 2022 Texas Instruments Incorporated

6.4 Thermal Information

THERMAL METRIC[1]		SNx4HC245					UNIT
		DB (SSOP)	DW (SOIC)	N (PDIP)	NS (SOP)	PW (TSSOP)	
		20 PINS					
$R_{\theta JA}$	Junction-to-ambient thermal resistance	92.1	77.0	57.0	74.1	99.7	°C/W
$R_{\theta JC(top)}$	Junction-to-case (top) thermal resistance	53.9	41.5	48.6	40.6	34.0	°C/W
$R_{\theta JB}$	Junction-to-board thermal resistance	47.2	44.8	38.0	41.6	50.7	°C/W
ψ_{JT}	Junction-to-top characterization parameter	16.5	16.8	25.4	14.8	1.8	°C/W
ψ_{JB}	Junction-to-board characterization parameter	46.8	44.3	37.8	41.2	50.1	°C/W

(1) For more information about traditional and new thermal metrics, see the *Semiconductor and IC Package Thermal Metrics* application report, SPRA953.

6.5 Electrical Characteristics

over recommended operating free-air temperature range (unless otherwise noted)

PARAMETER			TEST CONDITIONS		V_{CC}	T_A = 25°C			SN54HC245		SN74HC245		UNIT
						MIN	TYP	MAX	MIN	MAX	MIN	MAX	
V_{OH}	High-Level Output Voltage		V_I = V_{IH} or V_{IL}	I_{OH} = –20 µA	2 V	1.9	1.998		1.9		1.9		V
					4.5 V	4.4	4.499		4.4		4.4		
					6 V	5.9	5.999		5.9		5.9		
				I_{OH} = –6 mA	4.5 V	3.98	4.3		3.7		3.84		
				I_{OH} = –7.8 mA	6 V	5.48	5.8		5.2		5.34		
V_{OL}	Low-Level Output Voltage		V_I = V_{IH} or V_{IL}	I_{OL} = 20 µA	2 V		0.002	0.1		0.1		0.1	V
					4.5 V		0.001	0.1		0.1		0.1	
					6 V		0.001	0.1		0.1		0.1	
				I_{OL} = 6 mA	4.5 V		0.17	0.26		0.4		0.33	
				I_{OL} = 7.8 mA	6 V		0.15	0.26		0.4		0.33	
I_I	Input Current	DIR or $\overline{OE}$	V_I = V_{CC} or 0		6 V		±0.1	±100		±1000		±1000	nA
I_{OZ}	Off-State (High-Impedance State) Output Current	A or B	V_O = V_{CC} or 0		6 V		±0.01	±0.5		±10		±5	µA
I_{CC}	Supply Current		V_I = V_{CC} or 0,	I_O = 0	6 V			8		160		80	µA
C_i	Input Capacitance	DIR or $\overline{OE}$			2 V to 6 V		3	10		10		10	pF

Copyright © 2022 Texas Instruments Incorporated

6.6 Switching Characteristics, C_L = 50 pF

over recommended operating free-air temperature range (unless otherwise noted)
(see Figure 7-1)

PARAMETER	FROM (INPUT)	TO (OUTPUT)	V_{CC}	T_A = 25°C			SN54HC245		SN74HC245		UNIT
				MIN	TYP	MAX	MIN	MAX	MIN	MAX	
t_{pd}	A or B	B or A	2 V		40	105		160		130	ns
			4.5 V		15	21		32		26	
			6 V		12	18		27		22	
t_{en}	$\overline{OE}$	A or B	2 V		125	230		340		290	ns
			4.5 V		23	46		68		58	
			6 V		20	39		58		49	
t_{dis}	$\overline{OE}$	A or B	2 V		74	200		300		250	ns
			4.5 V		25	40		60		50	
			6 V		21	34		51		43	
t_t		A or B	2 V		20	60		90		75	ns
			4.5 V		8	12		18		15	
			6 V		6	10		15		13	

6.7 Switching Characteristics, C_L = 150 pF

over recommended operating free-air temperature range (unless otherwise noted)
(see Figure 7-1)

PARAMETER	FROM (INPUT)	TO (OUTPUT)	V_{CC}	T_A = 25°C			SN54HC245		SN74HC245		UNIT
				MIN	TYP	MAX	MIN	MAX	MIN	MAX	
t_{pd}	A or B	B or A	2 V		54	135		200		170	ns
			4.5 V		18	27		40		34	
			6 V		15	23		34		29	
t_{en}	$\overline{OE}$	A or B	2 V		150	270		405		335	ns
			4.5 V		31	54		81		67	
			6 V		25	46		69		56	
t_t		A or B	2 V		45	210		315		265	ns
			4.5 V		17	42		63		53	
			6 V		13	36		53		45	

Copyright © 2022 Texas Instruments Incorporated

6.8 Operating Characteristics

T_A = 25°C

PARAMETER		TEST CONDITIONS	TYP	UNIT
C_{pd}	Power dissipation capacitance per transceiver	No load	40	pF

6.9 Typical Characteristics

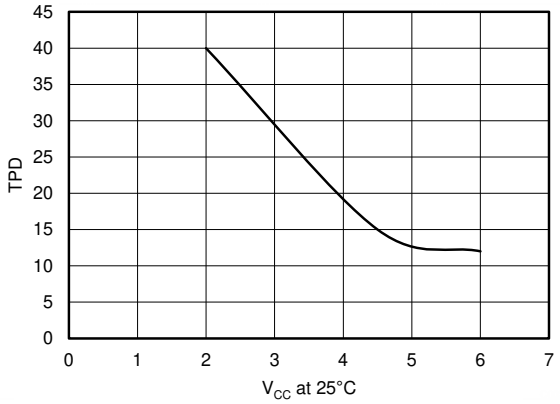

Figure 6-1. TPD vs V_{CC} at 25°C

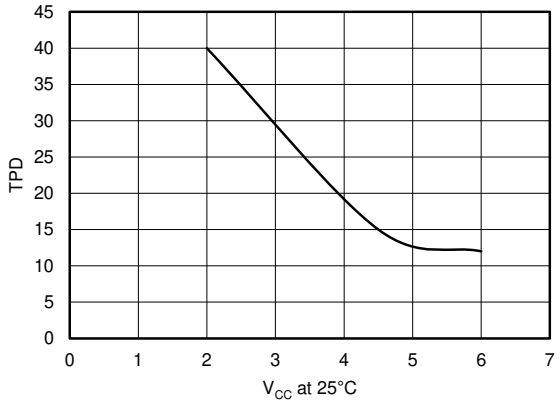

Figure 6-2. TPD vs V_{CC} at 25°C

Copyright © 2022 Texas Instruments Incorporated

7 Parameter Measurement Information

7.1

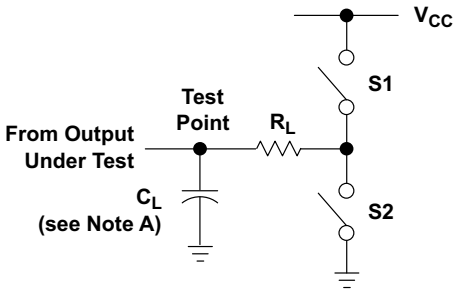

LOAD CIRCUIT

PARAMETER		R_L	C_L	S1	S2
t_{en}	t_{PZH}	1 kΩ	50 pF or 150 pF	Open	Closed
	t_{PZL}			Closed	Open
t_{dis}	t_{PHZ}	1 kΩ	50 pF	Open	Closed
	t_{PLZ}			Closed	Open
t_{pd} or t_t		--	50 pF or 150 pF	Open	Open

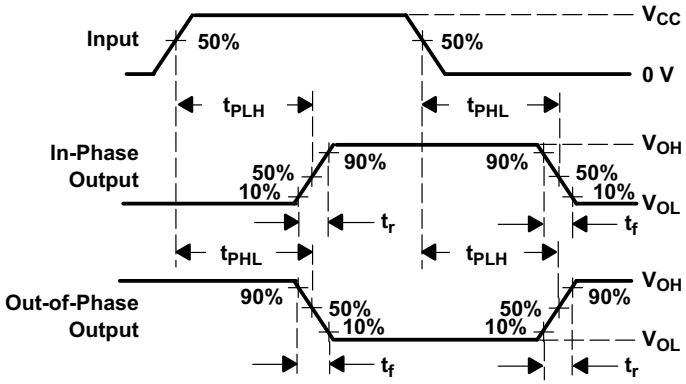

VOLTAGE WAVEFORMS
PROPAGATION DELAY AND OUTPUT TRANSITION TIMES

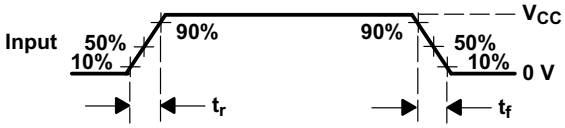

VOLTAGE WAVEFORM
INPUT RISE AND FALL TIMES

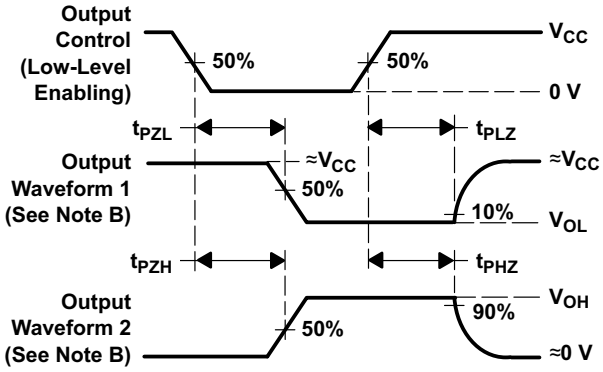

VOLTAGE WAVEFORMS
ENABLE AND DISABLE TIMES FOR 3-STATE OUTPUTS

A. C_L includes probe and test-fixture capacitance.
B. Waveform 1 is for an output with internal conditions such that the output is low except when disabled by the output control. Waveform 2 is for an output with internal conditions such that the output is high except when disabled by the output control.
C. Phase relationships between waveforms were chosen arbitrarily. All input pulses are supplied by generators having the following characteristics: PRR ≤ 1 MHz, Z_O = 50 Ω, t_r = 6 ns, t_f = 6 ns.
D. The outputs are measured one at a time with one input transition per measurement.
E. t_{PLZ} and t_{PHZ} are the same as t_{dis}.
F. t_{PZL} and t_{PZH} are the same as t_{en}.
G. t_{PLH} and t_{PHL} are the same as t_{pd}.

Figure 7-1. Load Circuit and Voltage Waveforms

Copyright © 2022 Texas Instruments Incorporated

8 Detailed Description

8.1 Overview

These octal bus transceivers are designed for asynchronous two-way communication between data buses. The control-function implementation minimizes external timing requirements. The SNx4HC245 devices allow data transmission from the A bus to the B bus or from the B bus to the A bus, depending on the logic level at the direction-control (DIR) input. The output-enable (OE) input can be used to disable the device so that the buses are effectively isolated. To ensure the high-impedance state during power up or power down, OE should be tied to VCC through a pullup resistor; the minimum value of the resistor is determined by the current-sinking capability of the driver.

8.2 Functional Block Diagram

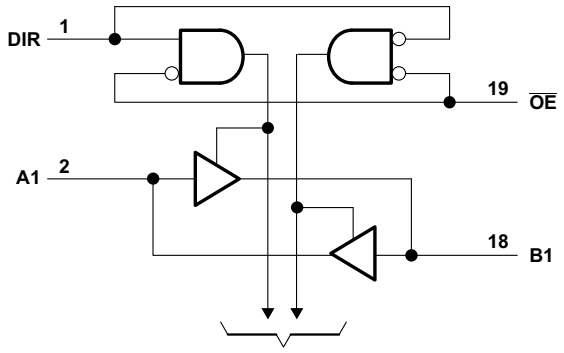

Logic Diagram (Positive Logic)

8.3 Feature Description

The SNx4HC245 devices have a wide operating VCC range from 2 V to 6 V with slower edge rates to minimize output ringing.

8.4 Device Functional Modes

Table 8-1 lists the function modes of the SNx4HC245.

Table 8-1. Function Table

INPUTS (1)		OPERATION
$\overline{OE}$	DIR	
L	L	B data to A bus
L	H	A data to B bus
H	X	Isolation

(1) H = High Voltage Level, L = Low Voltage Level, X = Don't Care

Copyright © 2022 Texas Instruments Incorporated

9 Application and Implementation

Note

Information in the following applications sections is not part of the TI component specification, and TI does not warrant its accuracy or completeness. TI's customers are responsible for determining suitability of components for their purposes, as well as validating and testing their design implementation to confirm system functionality.

9.1 Application Information

The SNx4HC245 is a low-drive CMOS device that can be used for a multitude of bus interface type applications where output ringing is a concern. The low drive and slow edge rates will minimize overshoot and undershoot on the outputs.

9.2 Typical Application

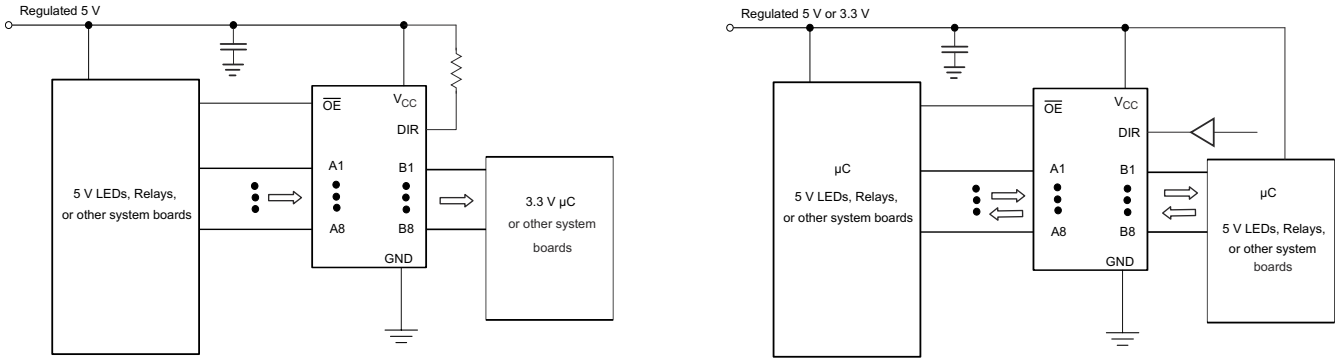

Figure 9-1. Typical Application Schematic

9.2.1 Design Requirements

This device uses CMOS technology and has balanced output drive. Care should be taken to avoid bus contention because it can drive currents that would exceed maximum limits. Outputs can be combined to produce higher drive but the high drive will also create faster edges into light loads, so routing and load conditions should be considered to prevent ringing.

9.2.2 Detailed Design Procedure

1. Recommended Input Conditions
   - Rise time and fall time specs: See (Δt/ΔV) in the *Section 6.3*.
   - Specified high and low levels: See (V_{IH} and V_{IL}) in the *Section 6.3*.
2. Recommend Output Conditions
   - Load currents should not exceed 25 mA per output and 75 mA total for the part.
   - Outputs should not be pulled above V_{CC}.

Copyright © 2022 Texas Instruments Incorporated

9.2.3 Application Curve

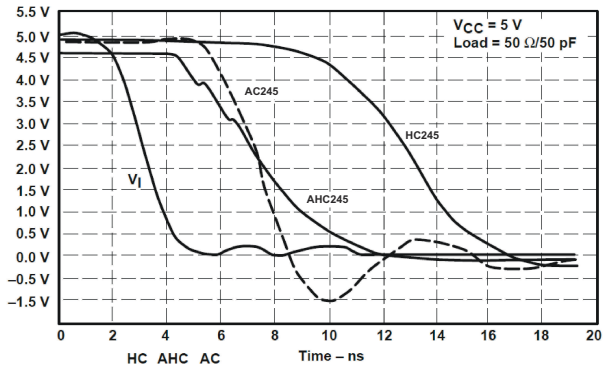

Figure 9-2. Switching Characteristics Comparison

10 Power Supply Recommendations

The power supply can be any voltage between the MIN and MAX supply voltage rating located in the *Section 6.3*.

Each V_{CC} pin should have a good bypass capacitor to prevent power disturbance. For devices with a single supply, 0.1 µF is recommended; if there are multiple V_{CC} pins, then 0.01 µF or 0.022 µF is recommended for each power pin. It is acceptable to parallel multiple bypass caps to reject different frequencies of noise. A 0.1 µF and a 1 µF are commonly used in parallel. The bypass capacitor should be installed as close to the power pin as possible for best results.

11 Layout

11.1 Layout Guidelines

When using multiple-bit logic devices, inputs should never float.

In many cases, functions or parts of functions of digital logic devices are unused, for example, when only two inputs of a triple-input AND gate are used or only 3 of the 4 buffer gates are used. Such input pins should not be left unconnected because the undefined voltages at the outside connections result in undefined operational states. Figure 11-1 specifies the rules that must be observed under all circumstances. All unused inputs of digital logic devices must be connected to a high or low bias to prevent them from floating. The logic level that should be applied to any particular unused input depends on the function of the device. Generally they will be tied to GND or V_{CC}, whichever makes more sense or is more convenient. It is generally acceptable to float outputs, unless the part is a transceiver. If the transceiver has an output enable pin, it will disable the output section of the part when asserted. This will not disable the input section of the IOs, so they cannot float when disabled.

11.2 Layout Example

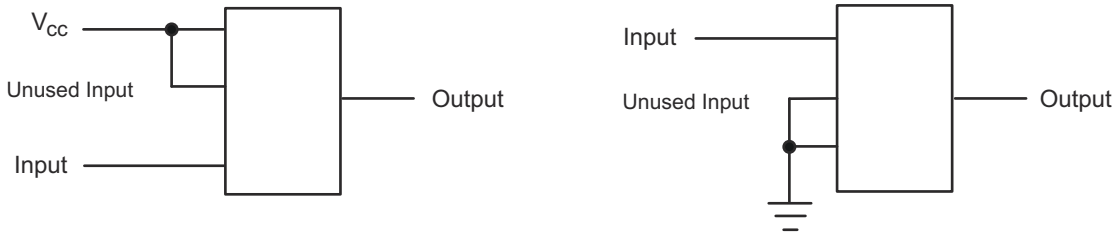

Figure 11-1. Layout Diagram

Copyright © 2022 Texas Instruments Incorporated

12 Device and Documentation Support

12.1 Related Links

The table below lists quick access links. Categories include technical documents, support and community resources, tools and software, and quick access to sample or buy.

Table 12-1. Related Links

PARTS	PRODUCT FOLDER	SAMPLE & BUY	TECHNICAL DOCUMENTS	TOOLS & SOFTWARE	SUPPORT & COMMUNITY
SN54HC245	Click here	Click here	Click here	Click here	Click here
SN74HC245	Click here	Click here	Click here	Click here	Click here

12.2 Receiving Notification of Documentation Updates

To receive notification of documentation updates, navigate to the device product folder on ti.com. Click on *Subscribe to updates* to register and receive a weekly digest of any product information that has changed. For change details, review the revision history included in any revised document.

12.3 Support Resources

TI E2E™ support forums are an engineer's go-to source for fast, verified answers and design help — straight from the experts. Search existing answers or ask your own question to get the quick design help you need.

Linked content is provided "AS IS" by the respective contributors. They do not constitute TI specifications and do not necessarily reflect TI's views; see TI's Terms of Use.

12.4 Trademarks

TI E2E™ is a trademark of Texas Instruments.
All trademarks are the property of their respective owners.

12.5 Electrostatic Discharge Caution



This integrated circuit can be damaged by ESD. Texas Instruments recommends that all integrated circuits be handled with appropriate precautions. Failure to observe proper handling and installation procedures can cause damage.

ESD damage can range from subtle performance degradation to complete device failure. Precision integrated circuits may be more susceptible to damage because very small parametric changes could cause the device not to meet its published specifications.

12.6 Glossary

TI Glossary — This glossary lists and explains terms, acronyms, and definitions.

13 Mechanical, Packaging, and Orderable Information

The following pages include mechanical, packaging, and orderable information. This information is the most current data available for the designated devices. This data is subject to change without notice and revision of this document. For browser-based versions of this data sheet, refer to the left-hand navigation.

Copyright © 2022 Texas Instruments Incorporated

PACKAGING INFORMATION

Orderable part number	Status (1)	Material type (2)	Package | Pins	Package qty | Carrier	RoHS (3)	Lead finish/ Ball material (4)	MSL rating/ Peak reflow (5)	Op temp (°C)	Part marking (6)
5962-8408501VRA	Active	Production	CDIP (J) | 20	20 | TUBE	No	SNPB	N/A for Pkg Type	-55 to 125	5962-8408501VRA SNV54HC245J
5962-8408501VRA.A	Active	Production	CDIP (J) | 20	20 | TUBE	No	SNPB	N/A for Pkg Type	-55 to 125	5962-8408501VRA SNV54HC245J
5962-8408501VSA	Active	Production	CFP (W) | 20	25 | TUBE	No	SNPB	N/A for Pkg Type	-55 to 125	5962-8408501VSA SNV54HC245W
5962-8408501VSA.A	Active	Production	CFP (W) | 20	25 | TUBE	No	SNPB	N/A for Pkg Type	-55 to 125	5962-8408501VSA SNV54HC245W
84085012A	Active	Production	LCCC (FK) | 20	55 | TUBE	No	SNPB	N/A for Pkg Type	-55 to 125	84085012A SNJ54HC 245FK
8408501RA	Active	Production	CDIP (J) | 20	20 | TUBE	No	SNPB	N/A for Pkg Type	-55 to 125	8408501RA SNJ54HC245J
8408501SA	Active	Production	CFP (W) | 20	25 | TUBE	No	SNPB	N/A for Pkg Type	-55 to 125	8408501SA SNJ54HC245W
JM38510/65503BRA	Active	Production	CDIP (J) | 20	20 | TUBE	No	SNPB	N/A for Pkg Type	-55 to 125	JM38510/ 65503BRA
JM38510/65503BRA.A	Active	Production	CDIP (J) | 20	20 | TUBE	No	SNPB	N/A for Pkg Type	-55 to 125	JM38510/ 65503BRA
JM38510/65503BSA	Active	Production	CFP (W) | 20	25 | TUBE	No	SNPB	N/A for Pkg Type	-55 to 125	JM38510/ 65503BSA
JM38510/65503BSA.A	Active	Production	CFP (W) | 20	25 | TUBE	No	SNPB	N/A for Pkg Type	-55 to 125	JM38510/ 65503BSA
M38510/65503BRA	Active	Production	CDIP (J) | 20	20 | TUBE	No	SNPB	N/A for Pkg Type	-55 to 125	JM38510/ 65503BRA
M38510/65503BSA	Active	Production	CFP (W) | 20	25 | TUBE	No	SNPB	N/A for Pkg Type	-55 to 125	JM38510/ 65503BSA
SN54HC245J	Active	Production	CDIP (J) | 20	20 | TUBE	No	SNPB	N/A for Pkg Type	-55 to 125	SN54HC245J
SN54HC245J.A	Active	Production	CDIP (J) | 20	20 | TUBE	No	SNPB	N/A for Pkg Type	-55 to 125	SN54HC245J
SN74HC245DBR	Active	Production	SSOP (DB) | 20	2000 | LARGE T&R	Yes	NIPDAU	Level-1-260C-UNLIM	-40 to 85	HC245

Orderable part number	Status (1)	Material type (2)	Package | Pins	Package qty | Carrier	RoHS (3)	Lead finish/ Ball material (4)	MSL rating/ Peak reflow (5)	Op temp (°C)	Part marking (6)
SN74HC245DBR.A	Active	Production	SSOP (DB) | 20	2000 | LARGE T&R	Yes	NIPDAU	Level-1-260C-UNLIM	-40 to 85	HC245
SN74HC245DBRG4	Active	Production	SSOP (DB) | 20	2000 | LARGE T&R	Yes	NIPDAU	Level-1-260C-UNLIM	-40 to 85	HC245
SN74HC245DW	Obsolete	Production	SOIC (DW) | 20	-	-	Call TI	Call TI	-40 to 85	HC245
SN74HC245DWR	Active	Production	SOIC (DW) | 20	2000 | LARGE T&R	Yes	NIPDAU	Level-1-260C-UNLIM	-40 to 85	HC245
SN74HC245DWR.A	Active	Production	SOIC (DW) | 20	2000 | LARGE T&R	Yes	NIPDAU	Level-1-260C-UNLIM	-40 to 85	HC245
SN74HC245DWRE4	Active	Production	SOIC (DW) | 20	2000 | LARGE T&R	Yes	NIPDAU	Level-1-260C-UNLIM	-40 to 85	HC245
SN74HC245DWRG4	Active	Production	SOIC (DW) | 20	2000 | LARGE T&R	Yes	NIPDAU	Level-1-260C-UNLIM	-40 to 85	HC245
SN74HC245N	Active	Production	PDIP (N) | 20	20 | TUBE	Yes	NIPDAU	N/A for Pkg Type	-40 to 85	SN74HC245N
SN74HC245N.A	Active	Production	PDIP (N) | 20	20 | TUBE	Yes	NIPDAU	N/A for Pkg Type	-40 to 85	SN74HC245N
SN74HC245NSR	Active	Production	SOP (NS) | 20	2000 | LARGE T&R	Yes	NIPDAU	Level-1-260C-UNLIM	-40 to 85	HC245
SN74HC245NSR.A	Active	Production	SOP (NS) | 20	2000 | LARGE T&R	Yes	NIPDAU	Level-1-260C-UNLIM	-40 to 85	HC245
SN74HC245NSRE4	Active	Production	SOP (NS) | 20	2000 | LARGE T&R	Yes	NIPDAU	Level-1-260C-UNLIM	-40 to 85	HC245
SN74HC245PW	Obsolete	Production	TSSOP (PW) | 20	-	-	Call TI	Call TI	-40 to 85	HC245
SN74HC245PWR	Active	Production	TSSOP (PW) | 20	2000 | LARGE T&R	Yes	NIPDAU	Level-1-260C-UNLIM	-40 to 85	HC245
SN74HC245PWR.A	Active	Production	TSSOP (PW) | 20	2000 | LARGE T&R	Yes	NIPDAU	Level-1-260C-UNLIM	-40 to 85	HC245
SN74HC245PWRG4	Active	Production	TSSOP (PW) | 20	2000 | LARGE T&R	Yes	NIPDAU	Level-1-260C-UNLIM	-40 to 85	HC245
SN74HC245PWRG4.A	Active	Production	TSSOP (PW) | 20	2000 | LARGE T&R	Yes	NIPDAU	Level-1-260C-UNLIM	-40 to 85	HC245
SN74HC245PWT	Obsolete	Production	TSSOP (PW) | 20	-	-	Call TI	Call TI	-40 to 85	HC245
SNJ54HC245FK	Active	Production	LCCC (FK) | 20	55 | TUBE	No	SNPB	N/A for Pkg Type	-55 to 125	84085012A SNJ54HC 245FK
SNJ54HC245FK.A	Active	Production	LCCC (FK) | 20	55 | TUBE	No	SNPB	N/A for Pkg Type	-55 to 125	84085012A SNJ54HC 245FK
SNJ54HC245J	Active	Production	CDIP (J) | 20	20 | TUBE	No	SNPB	N/A for Pkg Type	-55 to 125	8408501RA SNJ54HC245J
SNJ54HC245J.A	Active	Production	CDIP (J) | 20	20 | TUBE	No	SNPB	N/A for Pkg Type	-55 to 125	8408501RA SNJ54HC245J
SNJ54HC245W	Active	Production	CFP (W) | 20	25 | TUBE	No	SNPB	N/A for Pkg Type	-55 to 125	8408501SA SNJ54HC245W
SNJ54HC245W.A	Active	Production	CFP (W) | 20	25 | TUBE	No	SNPB	N/A for Pkg Type	-55 to 125	8408501SA SNJ54HC245W

(1) **Status:** For more details on status, see our product life cycle.

(2) **Material type:** When designated, preproduction parts are prototypes/experimental devices, and are not yet approved or released for full production. Testing and final process, including without limitation quality assurance, reliability performance testing, and/or process qualification, may not yet be complete, and this item is subject to further changes or possible discontinuation. If available for ordering, purchases will be subject to an additional waiver at checkout, and are intended for early internal evaluation purposes only. These items are sold without warranties of any kind.

(3) **RoHS values:** Yes, No, RoHS Exempt. See the TI RoHS Statement for additional information and value definition.

(4) **Lead finish/Ball material:** Parts may have multiple material finish options. Finish options are separated by a vertical ruled line. Lead finish/Ball material values may wrap to two lines if the finish value exceeds the maximum column width.

(5) **MSL rating/Peak reflow:** The moisture sensitivity level ratings and peak solder (reflow) temperatures. In the event that a part has multiple moisture sensitivity ratings, only the lowest level per JEDEC standards is shown. Refer to the shipping label for the actual reflow temperature that will be used to mount the part to the printed circuit board.

(6) **Part marking:** There may be an additional marking, which relates to the logo, the lot trace code information, or the environmental category of the part.

Multiple part markings will be inside parentheses. Only one part marking contained in parentheses and separated by a "~" will appear on a part. If a line is indented then it is a continuation of the previous line and the two combined represent the entire part marking for that device.

Important Information and Disclaimer: The information provided on this page represents TI's knowledge and belief as of the date that it is provided. TI bases its knowledge and belief on information provided by third parties, and makes no representation or warranty as to the accuracy of such information. Efforts are underway to better integrate information from third parties. TI has taken and continues to take reasonable steps to provide representative and accurate information but may not have conducted destructive testing or chemical analysis on incoming materials and chemicals. TI and TI suppliers consider certain information to be proprietary, and thus CAS numbers and other limited information may not be available for release.

In no event shall TI's liability arising out of such information exceed the total purchase price of the TI part(s) at issue in this document sold by TI to Customer on an annual basis.

OTHER QUALIFIED VERSIONS OF SN54HC245, SN54HC245-SP, SN74HC245 :

- Catalog : SN74HC245, SN54HC245
- Military : SN54HC245
- Space : SN54HC245-SP

NOTE: Qualified Version Definitions:

- Catalog - TI's standard catalog product

- Military - QML certified for Military and Defense Applications
- Space - Radiation tolerant, ceramic packaging and qualified for use in Space-based application

TAPE AND REEL INFORMATION

REEL DIMENSIONS

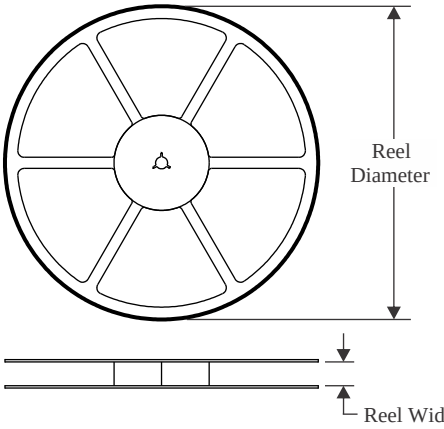

TAPE DIMENSIONS

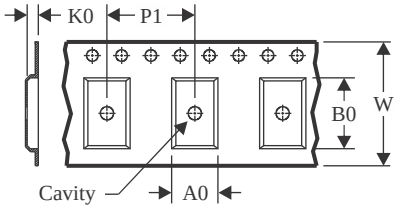

A0	Dimension designed to accommodate the component width
B0	Dimension designed to accommodate the component length
K0	Dimension designed to accommodate the component thickness
W	Overall width of the carrier tape
P1	Pitch between successive cavity centers

QUADRANT ASSIGNMENTS FOR PIN 1 ORIENTATION IN TAPE

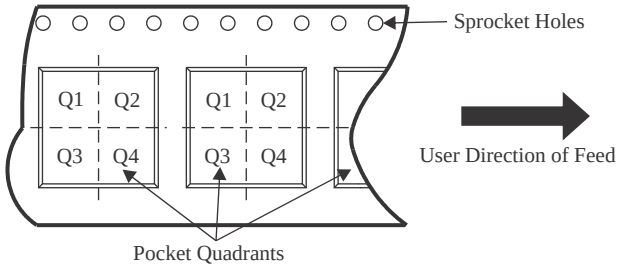

*All dimensions are nominal

Device	Package Type	Package Drawing	Pins	SPQ	Reel Diameter (mm)	Reel Width W1 (mm)	A0 (mm)	B0 (mm)	K0 (mm)	P1 (mm)	W (mm)	Pin1 Quadrant
SN74HC245DBR	SSOP	DB	20	2000	330.0	16.4	8.2	7.5	2.5	12.0	16.0	Q1
SN74HC245DWR	SOIC	DW	20	2000	330.0	24.4	10.9	13.3	2.7	12.0	24.0	Q1
SN74HC245NSR	SOP	NS	20	2000	330.0	24.4	8.4	13.0	2.5	12.0	24.0	Q1
SN74HC245PWR	TSSOP	PW	20	2000	330.0	16.4	6.95	7.0	1.4	8.0	16.0	Q1
SN74HC245PWRG4	TSSOP	PW	20	2000	330.0	16.4	6.95	7.0	1.4	8.0	16.0	Q1

TAPE AND REEL BOX DIMENSIONS

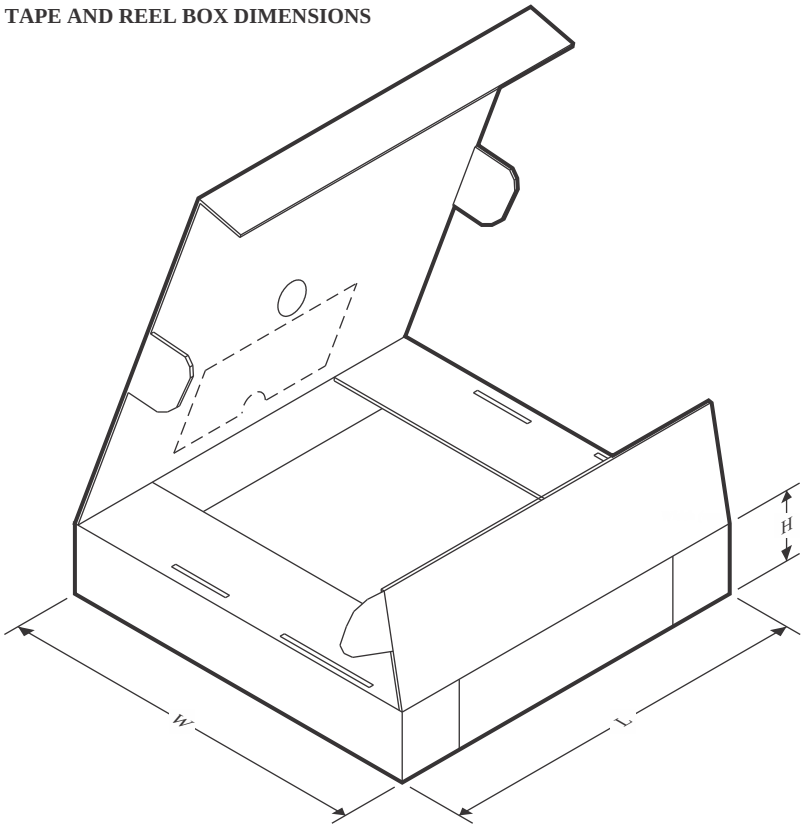

*All dimensions are nominal

Device	Package Type	Package Drawing	Pins	SPQ	Length (mm)	Width (mm)	Height (mm)
SN74HC245DBR	SSOP	DB	20	2000	353.0	353.0	32.0
SN74HC245DWR	SOIC	DW	20	2000	356.0	356.0	45.0
SN74HC245NSR	SOP	NS	20	2000	356.0	356.0	45.0
SN74HC245PWR	TSSOP	PW	20	2000	353.0	353.0	32.0
SN74HC245PWRG4	TSSOP	PW	20	2000	353.0	353.0	32.0

TUBE

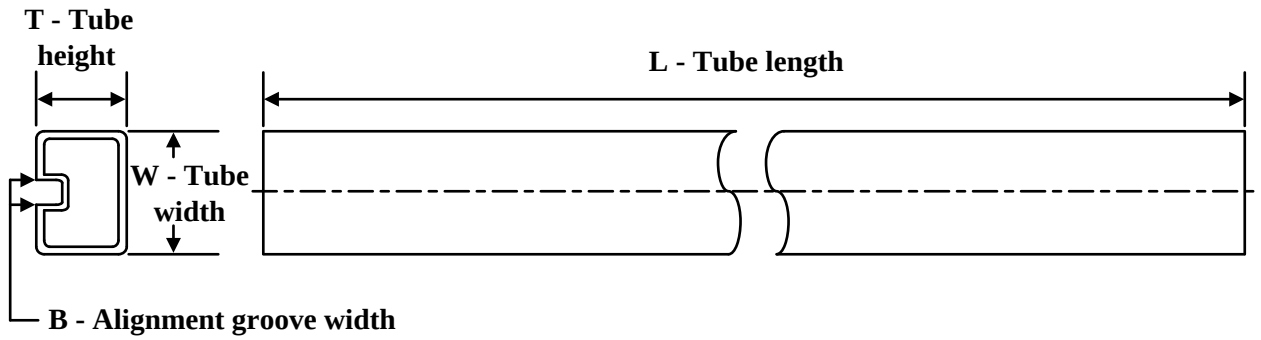

*All dimensions are nominal

Device	Package Name	Package Type	Pins	SPQ	L (mm)	W (mm)	T (µm)	B (mm)
5962-8408501VSA	W	CFP	20	25	506.98	26.16	6220	NA
5962-8408501VSA.A	W	CFP	20	25	506.98	26.16	6220	NA
84085012A	FK	LCCC	20	55	506.98	12.06	2030	NA
8408501SA	W	CFP	20	25	506.98	26.16	6220	NA
JM38510/65503BSA	W	CFP	20	25	506.98	26.16	6220	NA
JM38510/65503BSA.A	W	CFP	20	25	506.98	26.16	6220	NA
M38510/65503BSA	W	CFP	20	25	506.98	26.16	6220	NA
SN74HC245N	N	PDIP	20	20	506	13.97	11230	4.32
SN74HC245N.A	N	PDIP	20	20	506	13.97	11230	4.32
SNJ54HC245FK	FK	LCCC	20	55	506.98	12.06	2030	NA
SNJ54HC245FK.A	FK	LCCC	20	55	506.98	12.06	2030	NA
SNJ54HC245W	W	CFP	20	25	506.98	26.16	6220	NA
SNJ54HC245W.A	W	CFP	20	25	506.98	26.16	6220	NA

PACKAGE OUTLINE

DB0020A

SSOP - 2 mm max height

SMALL OUTLINE PACKAGE

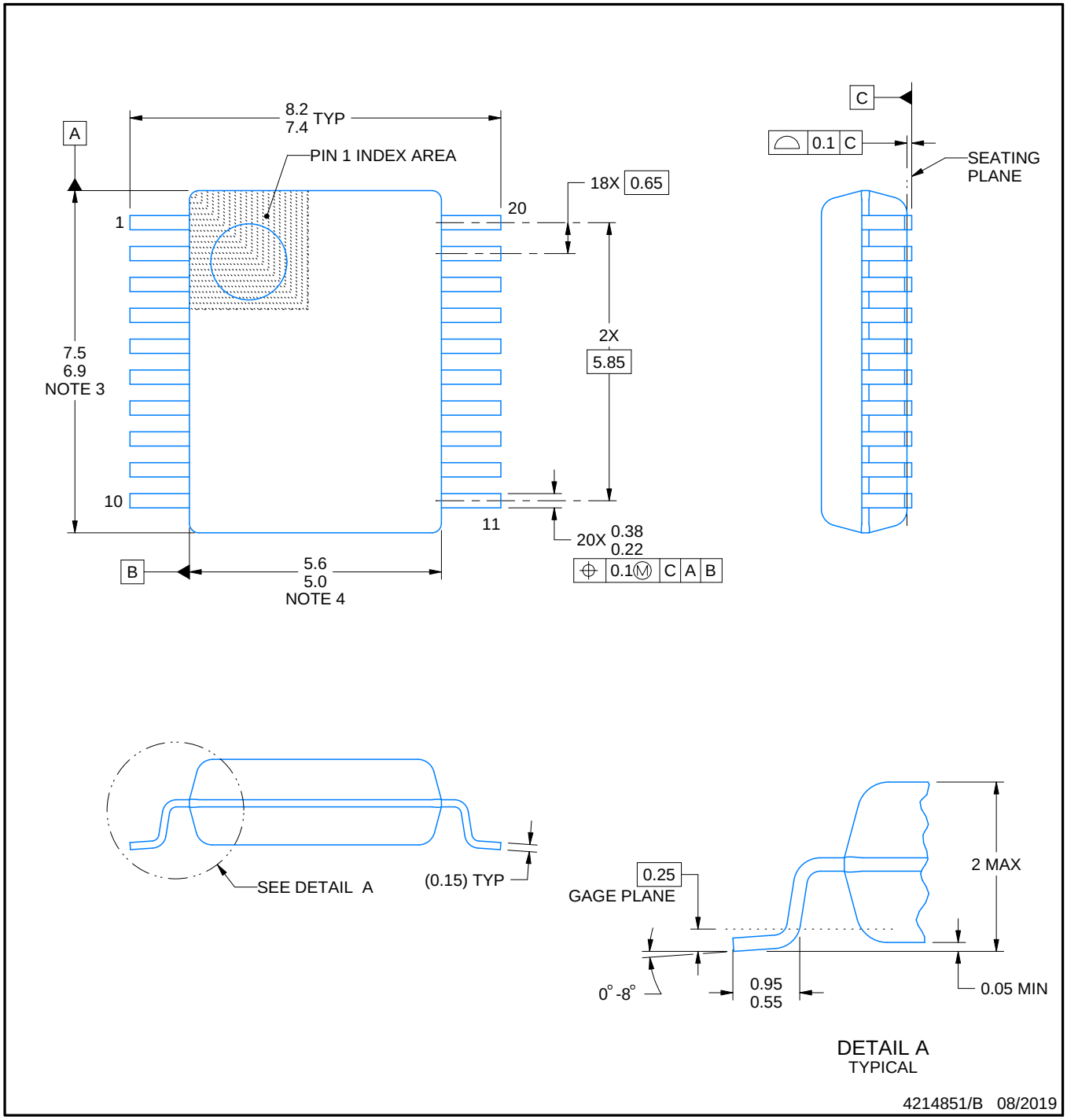

NOTES:

1. All linear dimensions are in millimeters. Any dimensions in parenthesis are for reference only. Dimensioning and tolerancing per ASME Y14.5M.
2. This drawing is subject to change without notice.
3. This dimension does not include mold flash, protrusions, or gate burrs. Mold flash, protrusions, or gate burrs shall not exceed 0.15 mm per side.
4. This dimension does not include interlead flash. Interlead flash shall not exceed 0.25 mm per side.
5. Reference JEDEC registration MO-150.

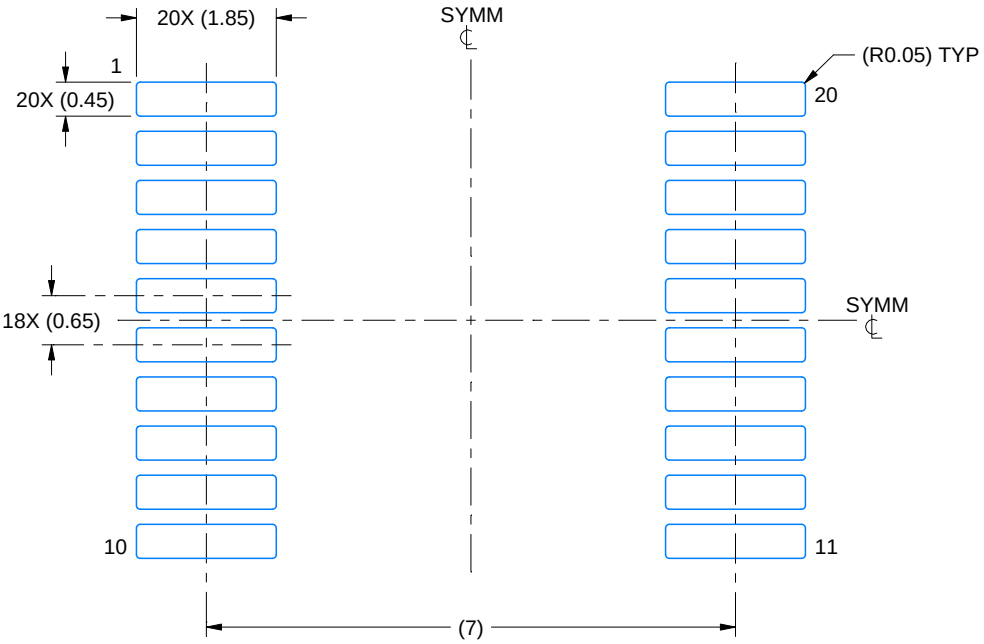

LAND PATTERN EXAMPLE
EXPOSED METAL SHOWN
SCALE: 10X

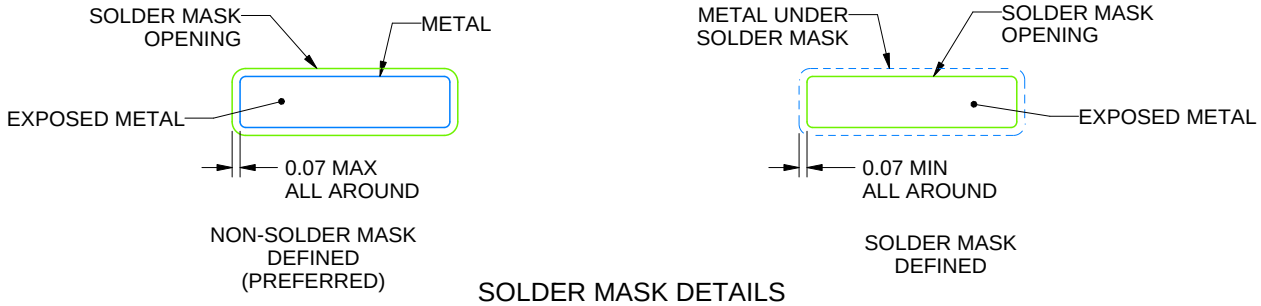

SOLDER MASK DETAILS

4214851/B 08/2019

NOTES: (continued)

6. Publication IPC-7351 may have alternate designs.
7. Solder mask tolerances between and around signal pads can vary based on board fabrication site.

EXAMPLE STENCIL DESIGN

DB0020A

SSOP - 2 mm max height

SMALL OUTLINE PACKAGE

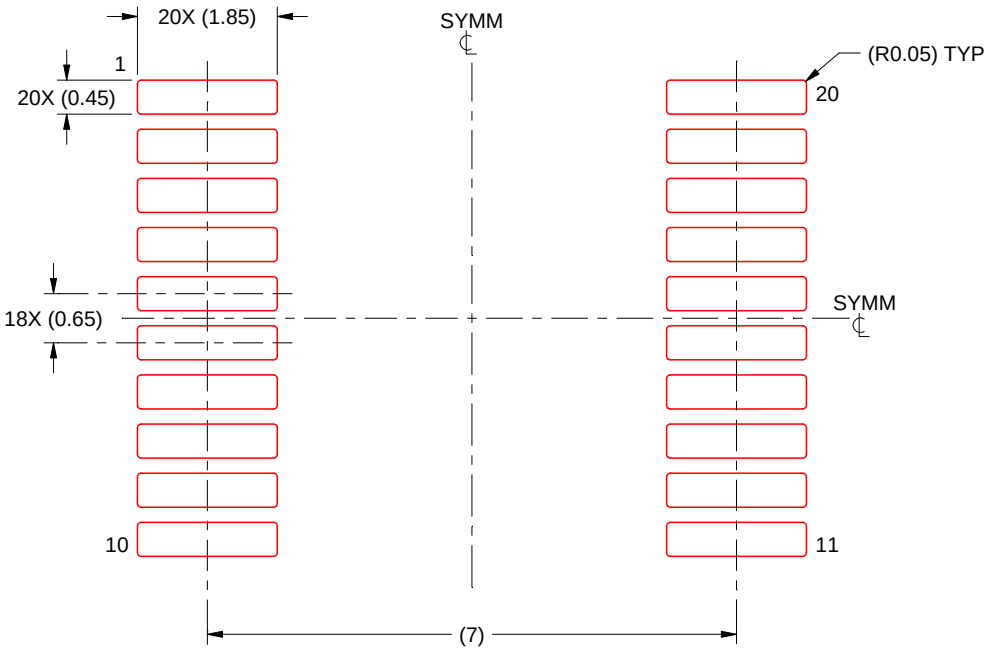

SOLDER PASTE EXAMPLE
BASED ON 0.125 mm THICK STENCIL
SCALE: 10X

4214851/B 08/2019

NOTES: (continued)

8. Laser cutting apertures with trapezoidal walls and rounded corners may offer better paste release. IPC-7525 may have alternate design recommendations.
9. Board assembly site may have different recommendations for stencil design.

MECHANICAL DATA

NS (R-PDSO-G)** **PLASTIC SMALL-OUTLINE PACKAGE**

14-PINS SHOWN

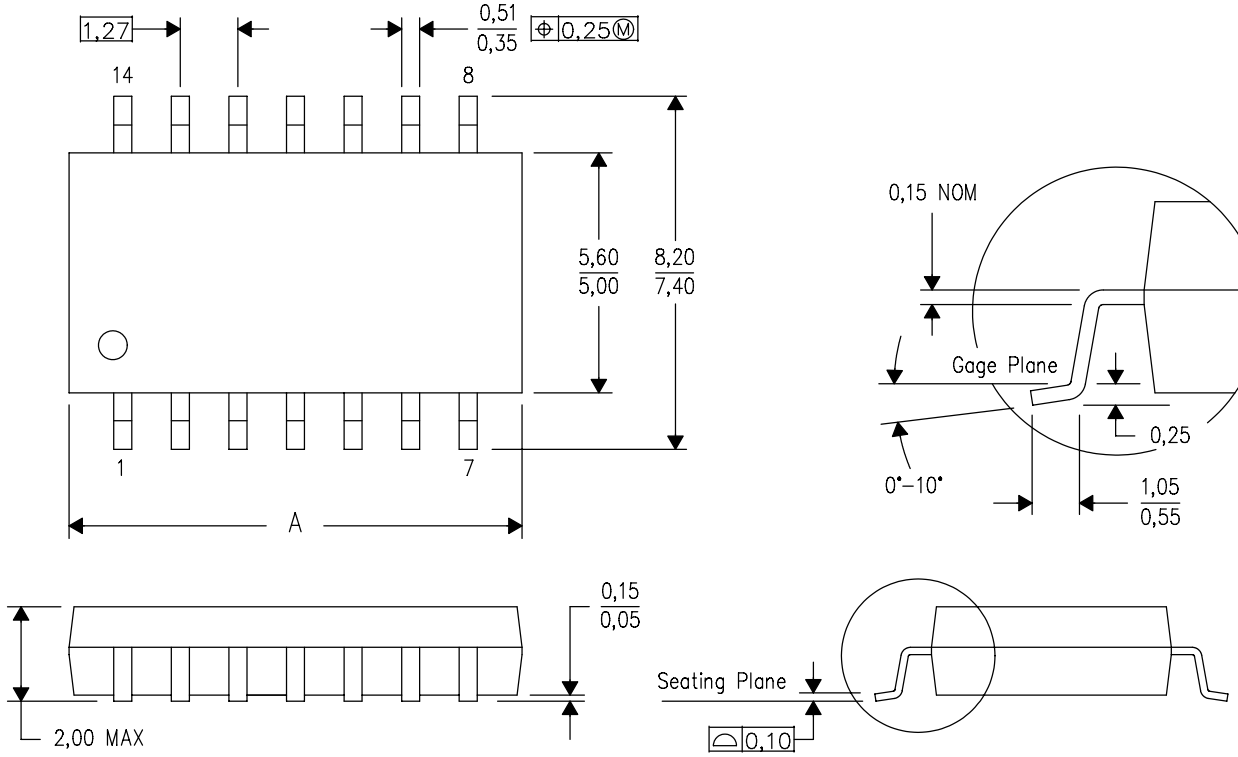

DIM \ PINS **	14	16	20	24
A MAX	10,50	10,50	12,90	15,30
A MIN	9,90	9,90	12,30	14,70

4040062/C 03/03

NOTES:
A. All linear dimensions are in millimeters.
B. This drawing is subject to change without notice.
C. Body dimensions do not include mold flash or protrusion, not to exceed 0,15.

J (R–GDIP–T**)

14 LEADS SHOWN

CERAMIC DUAL IN–LINE PACKAGE

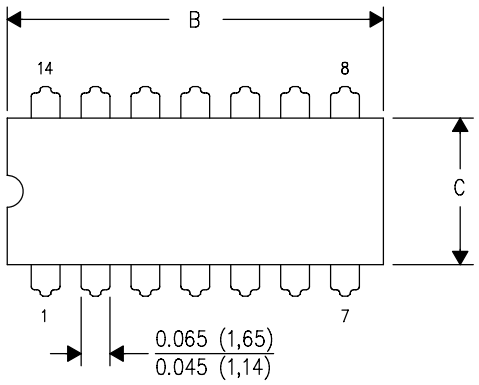

DIM \ PINS **	14	16	18	20
A	0.300 (7,62) BSC	0.300 (7,62) BSC	0.300 (7,62) BSC	0.300 (7,62) BSC
B MAX	0.785 (19,94)	.840 (21,34)	0.960 (24,38)	1.060 (26,92)
B MIN	—	—	—	—
C MAX	0.300 (7,62)	0.300 (7,62)	0.310 (7,87)	0.300 (7,62)
C MIN	0.245 (6,22)	0.245 (6,22)	0.220 (5,59)	0.245 (6,22)

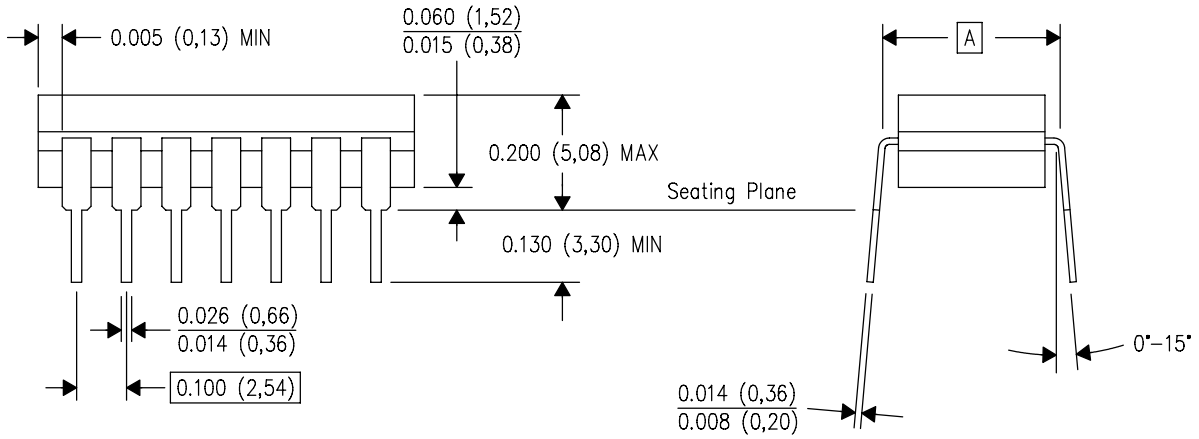

4040083/F 03/03

NOTES:
A. All linear dimensions are in inches (millimeters).
B. This drawing is subject to change without notice.
C. This package is hermetically sealed with a ceramic lid using glass frit.
D. Index point is provided on cap for terminal identification only on press ceramic glass frit seal only.
E. Falls within MIL STD 1835 GDIP1–T14, GDIP1–T16, GDIP1–T18 and GDIP1–T20.

GENERIC PACKAGE VIEW

FK 20

LCCC - 2.03 mm max height

8.89 x 8.89, 1.27 mm pitch

LEADLESS CERAMIC CHIP CARRIER

This image is a representation of the package family, actual package may vary.
Refer to the product data sheet for package details.

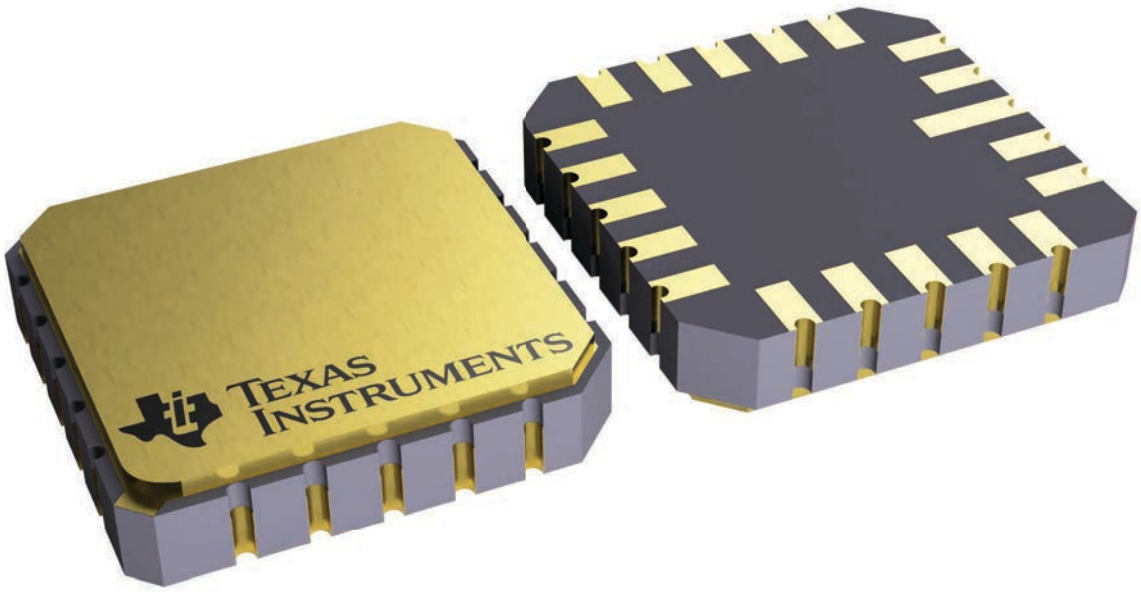

4229370VA\

N (R–PDIP–T**)

PLASTIC DUAL–IN–LINE PACKAGE

16 PINS SHOWN

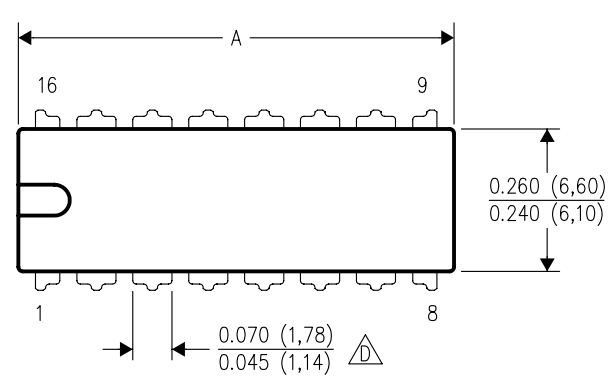

DIM \ PINS **	14	16	18	20
A MAX	0.775 (19,69)	0.775 (19,69)	0.920 (23,37)	1.060 (26,92)
A MIN	0.745 (18,92)	0.745 (18,92)	0.850 (21,59)	0.940 (23,88)
MS–001 VARIATION (C)	AA	BB	AC	AD

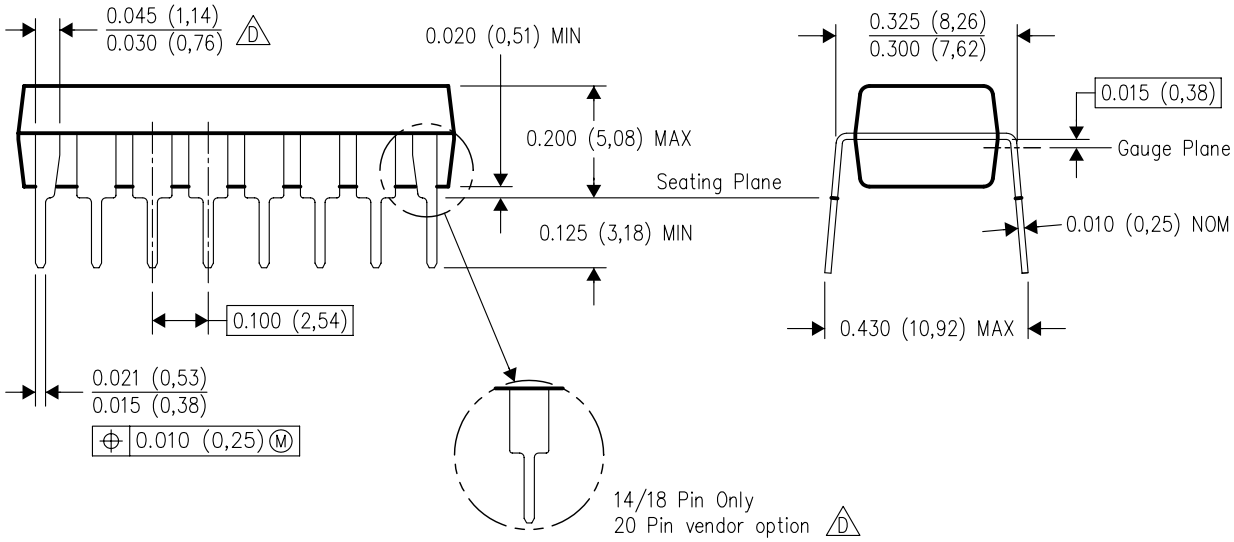

4040049/E 12/2002

NOTES:
A. All linear dimensions are in inches (millimeters).
B. This drawing is subject to change without notice.
C. Falls within JEDEC MS–001, except 18 and 20 pin minimum body length (Dim A).
D. The 20 pin end lead shoulder width is a vendor option, either half or full width.

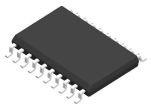

PACKAGE OUTLINE

DW0020A

SOIC - 2.65 mm max height

SOIC

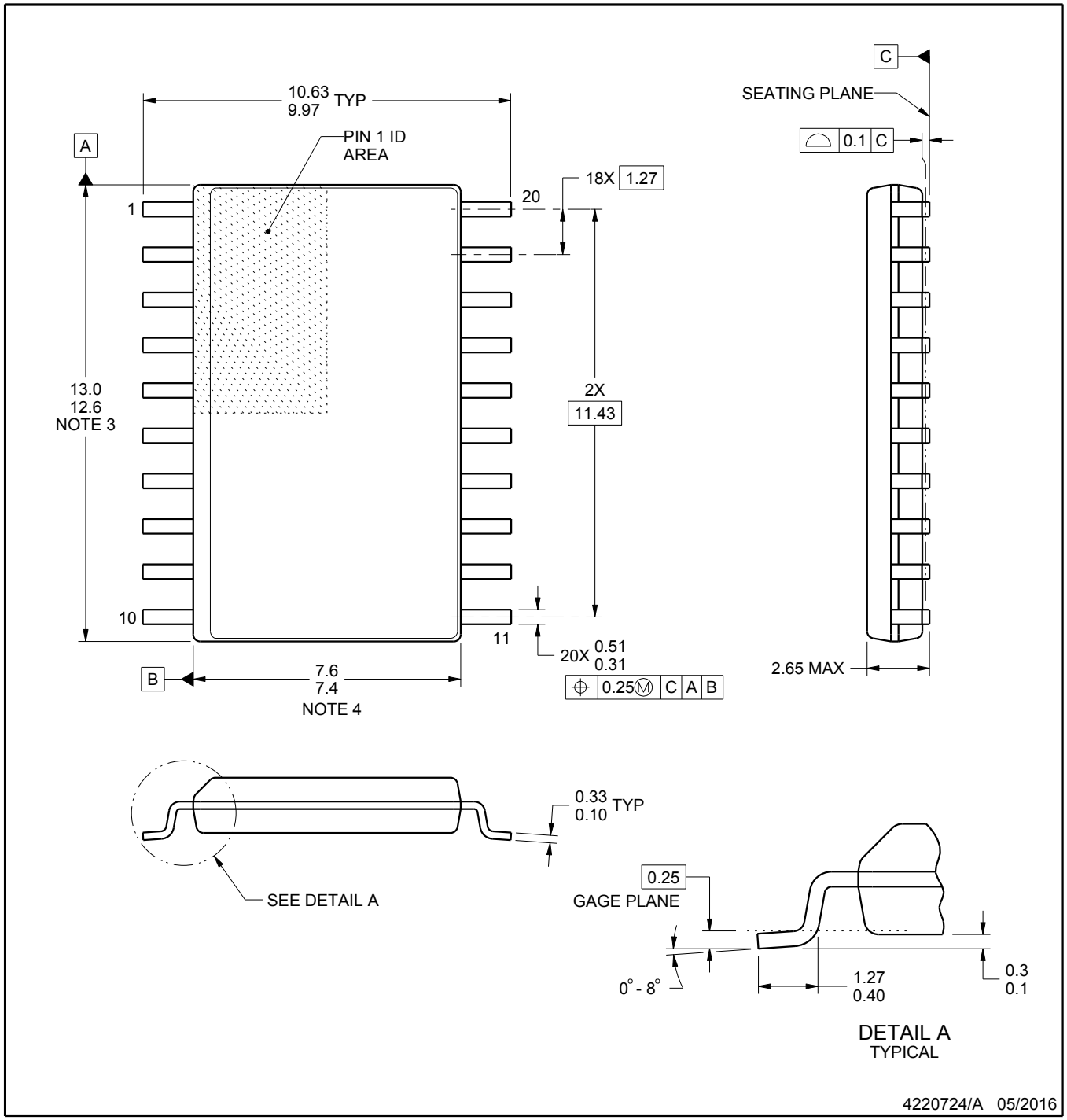

NOTES:

1. All linear dimensions are in millimeters. Dimensions in parenthesis are for reference only. Dimensioning and tolerancing per ASME Y14.5M.
2. This drawing is subject to change without notice.
3. This dimension does not include mold flash, protrusions, or gate burrs. Mold flash, protrusions, or gate burrs shall not exceed 0.15 mm per side.
4. This dimension does not include interlead flash. Interlead flash shall not exceed 0.43 mm per side.
5. Reference JEDEC registration MS-013.

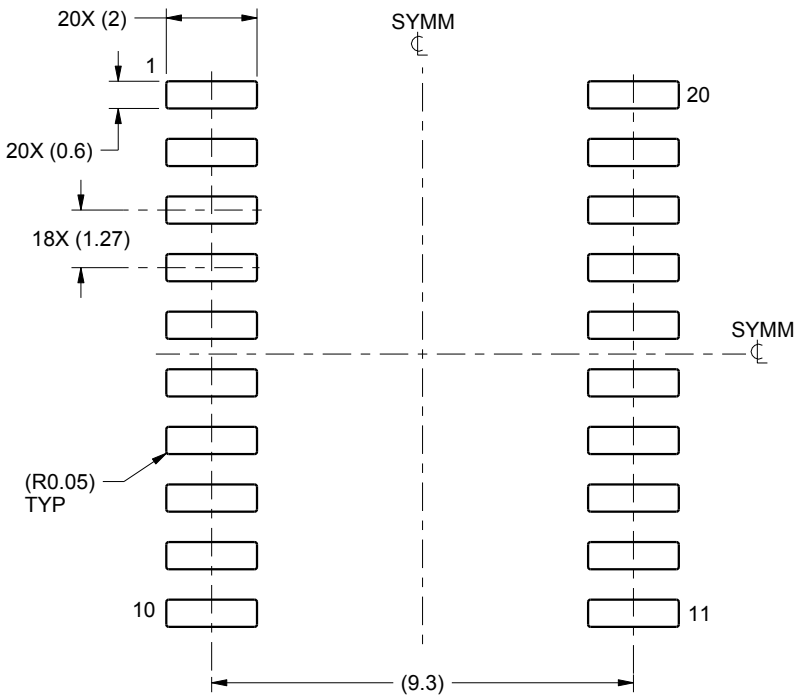

LAND PATTERN EXAMPLE
SCALE:6X

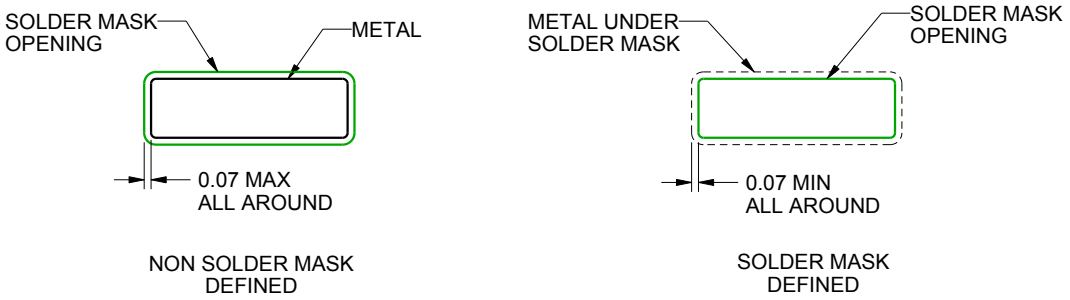

SOLDER MASK DETAILS

4220724/A 05/2016

NOTES: (continued)

6. Publication IPC-7351 may have alternate designs.
7. Solder mask tolerances between and around signal pads can vary based on board fabrication site.

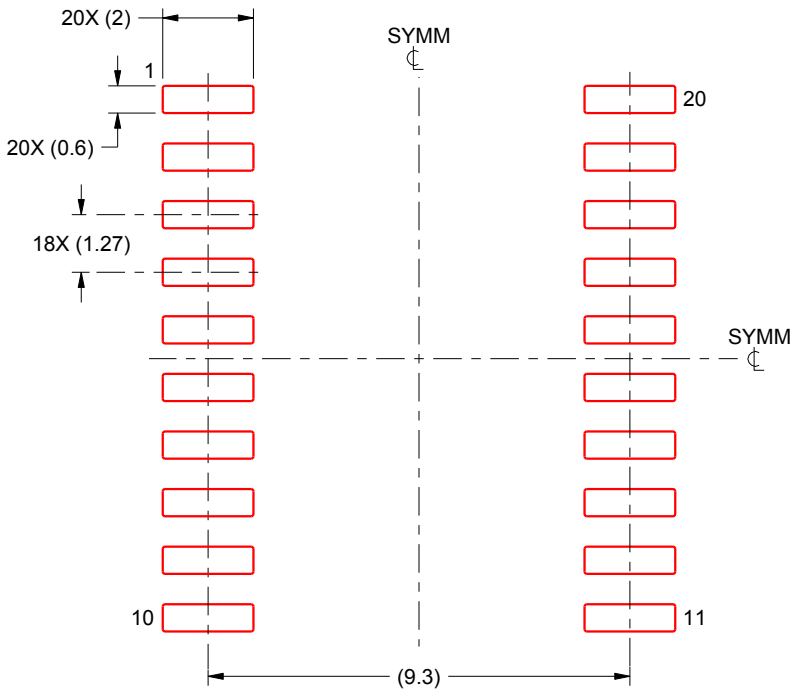

SOLDER PASTE EXAMPLE
BASED ON 0.125 mm THICK STENCIL
SCALE:6X

4220724/A 05/2016

NOTES: (continued)

8. Laser cutting apertures with trapezoidal walls and rounded corners may offer better paste release. IPC-7525 may have alternate design recommendations.
9. Board assembly site may have different recommendations for stencil design.

W (R–GDFP–F20) CERAMIC DUAL FLATPACK

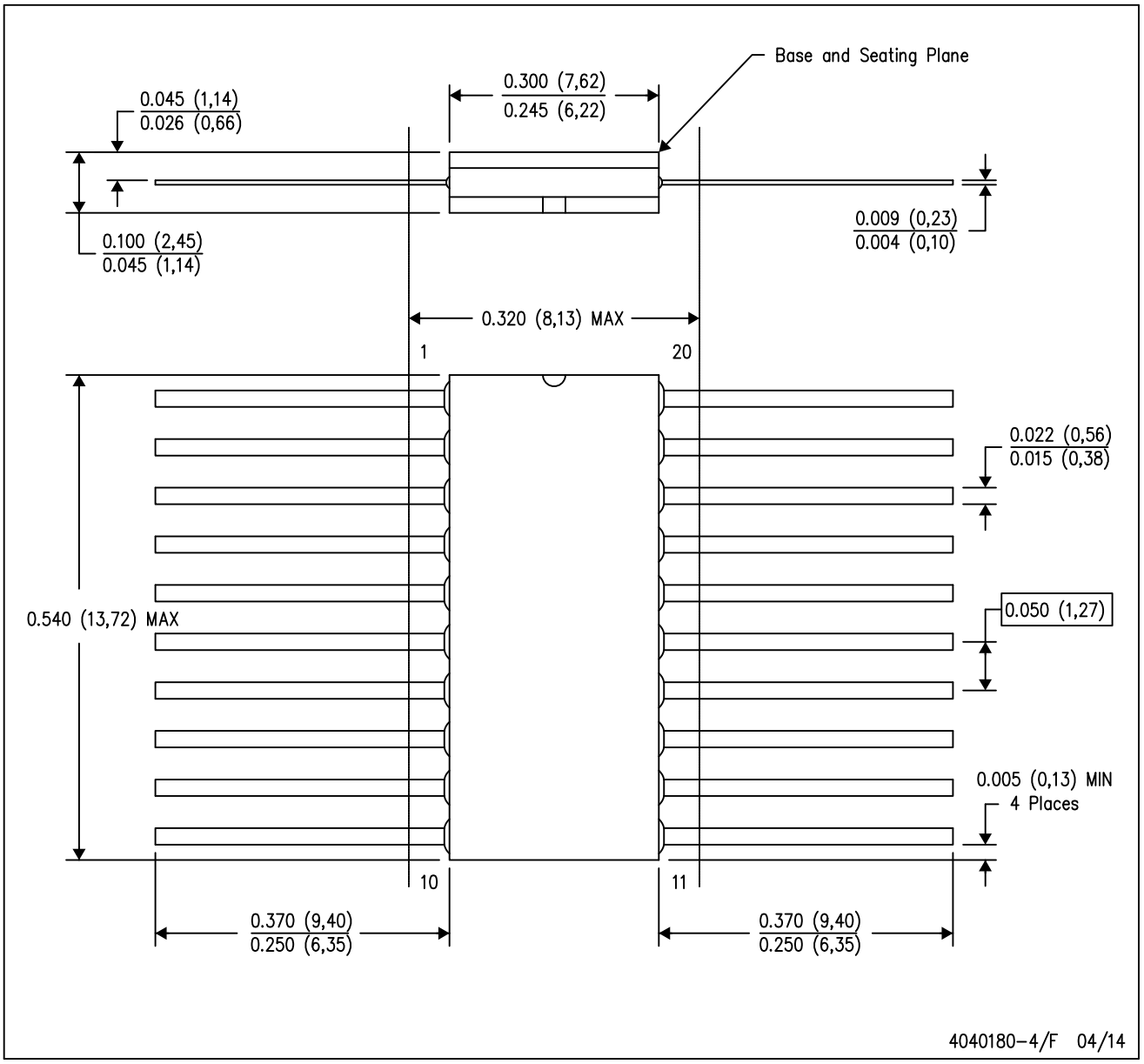

NOTES:
A. All linear dimensions are in inches (millimeters).
B. This drawing is subject to change without notice.
C. This package can be hermetically sealed with a ceramic lid using glass frit.
D. Index point is provided on cap for terminal identification only.
E. Falls within Mil–Std 1835 GDFP2–F20

PACKAGE OUTLINE

PW0020A

TSSOP - 1.2 mm max height

SMALL OUTLINE PACKAGE

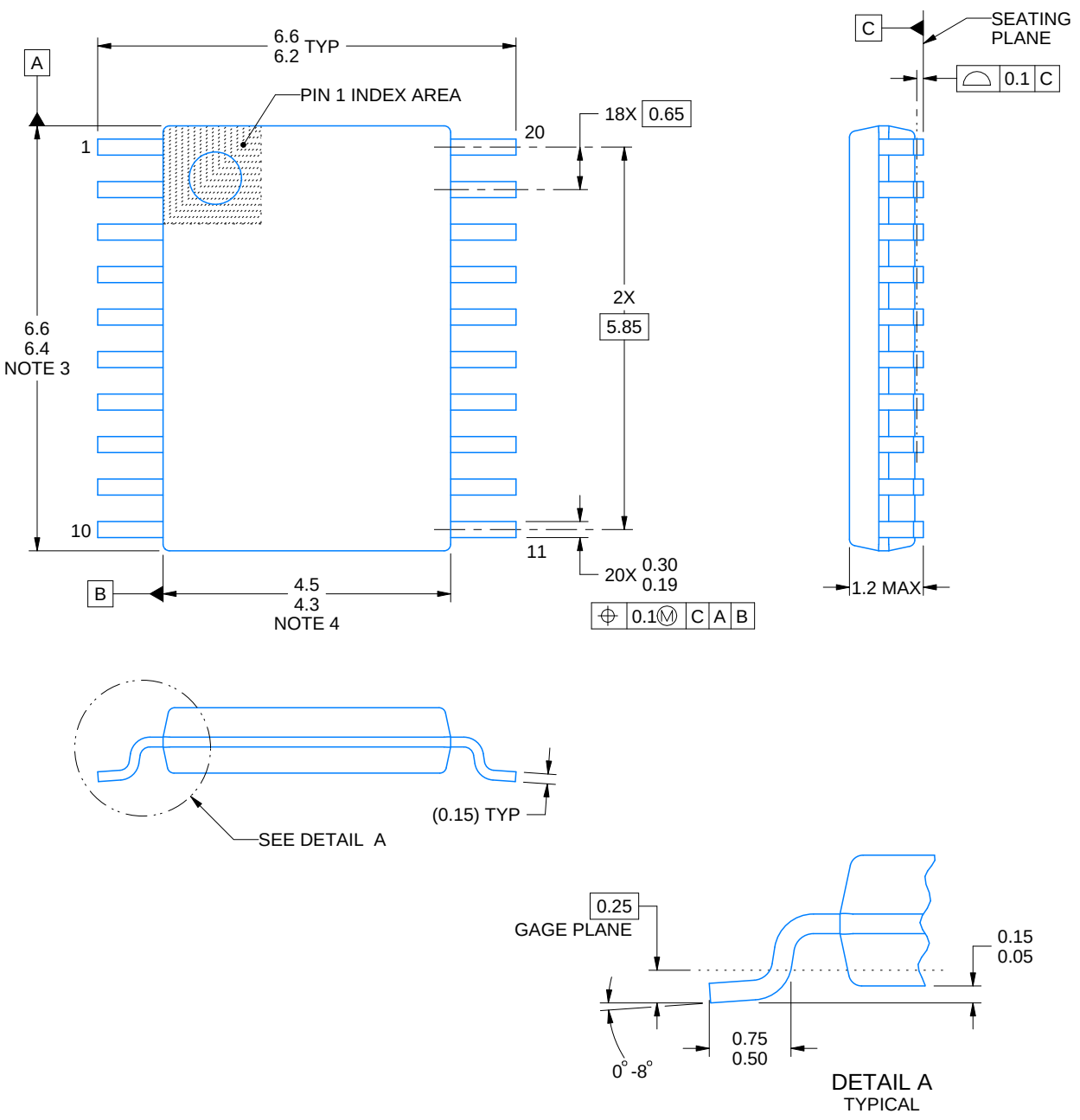

NOTES:

1. All linear dimensions are in millimeters. Any dimensions in parenthesis are for reference only. Dimensioning and tolerancing per ASME Y14.5M.
2. This drawing is subject to change without notice.
3. This dimension does not include mold flash, protrusions, or gate burrs. Mold flash, protrusions, or gate burrs shall not exceed 0.15 mm per side.
4. This dimension does not include interlead flash. Interlead flash shall not exceed 0.25 mm per side.
5. Reference JEDEC registration MO-153.

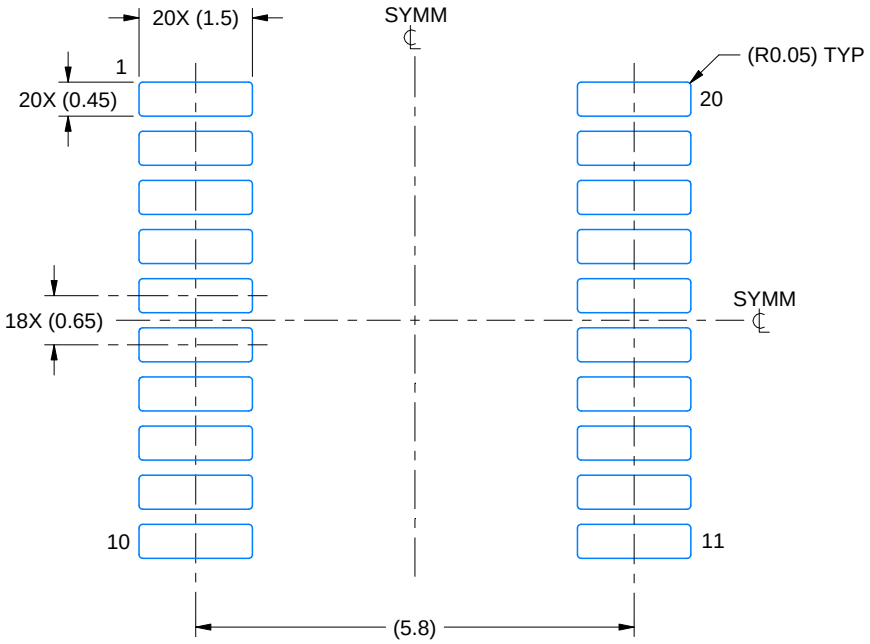

LAND PATTERN EXAMPLE
EXPOSED METAL SHOWN
SCALE: 10X



SOLDER MASK DETAILS

4220206/A 02/2017

NOTES: (continued)

6. Publication IPC-7351 may have alternate designs.
7. Solder mask tolerances between and around signal pads can vary based on board fabrication site.

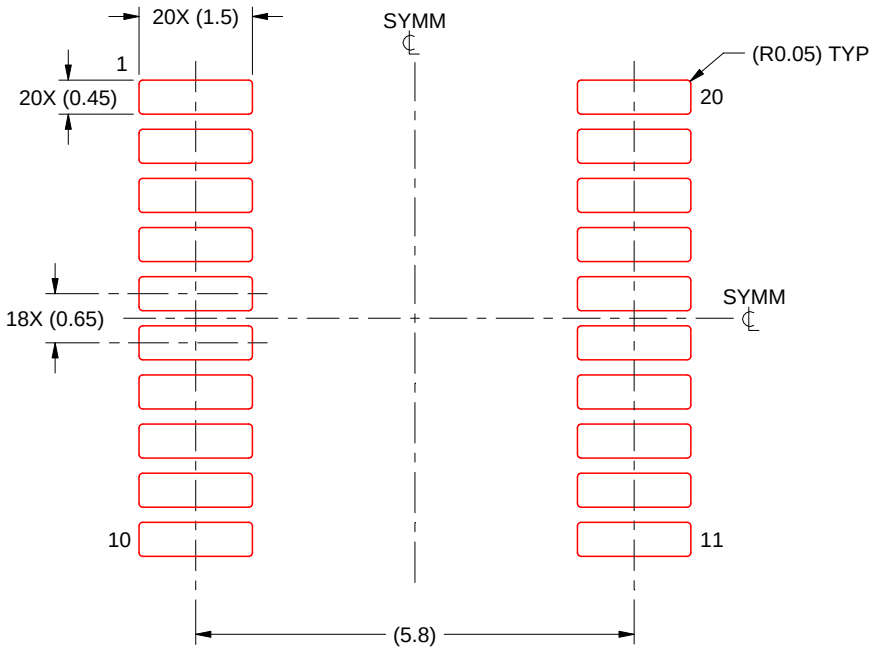

SOLDER PASTE EXAMPLE
BASED ON 0.125 mm THICK STENCIL
SCALE: 10X

4220206/A 02/2017

NOTES: (continued)

8. Laser cutting apertures with trapezoidal walls and rounded corners may offer better paste release. IPC-7525 may have alternate design recommendations.
9. Board assembly site may have different recommendations for stencil design.

IMPORTANT NOTICE AND DISCLAIMER

TI PROVIDES TECHNICAL AND RELIABILITY DATA (INCLUDING DATASHEETS), DESIGN RESOURCES (INCLUDING REFERENCE DESIGNS), APPLICATION OR OTHER DESIGN ADVICE, WEB TOOLS, SAFETY INFORMATION, AND OTHER RESOURCES “AS IS” AND WITH ALL FAULTS, AND DISCLAIMS ALL WARRANTIES, EXPRESS AND IMPLIED, INCLUDING WITHOUT LIMITATION ANY IMPLIED WARRANTIES OF MERCHANTABILITY, FITNESS FOR A PARTICULAR PURPOSE OR NON-INFRINGEMENT OF THIRD PARTY INTELLECTUAL PROPERTY RIGHTS.

These resources are intended for skilled developers designing with TI products. You are solely responsible for (1) selecting the appropriate TI products for your application, (2) designing, validating and testing your application, and (3) ensuring your application meets applicable standards, and any other safety, security, regulatory or other requirements.

These resources are subject to change without notice. TI grants you permission to use these resources only for development of an application that uses the TI products described in the resource. Other reproduction and display of these resources is prohibited. No license is granted to any other TI intellectual property right or to any third party intellectual property right. TI disclaims responsibility for, and you fully indemnify TI and its representatives against any claims, damages, costs, losses, and liabilities arising out of your use of these resources.

TI’s products are provided subject to TI’s Terms of Sale, TI’s General Quality Guidelines, or other applicable terms available either on ti.com or provided in conjunction with such TI products. TI’s provision of these resources does not expand or otherwise alter TI’s applicable warranties or warranty disclaimers for TI products. Unless TI explicitly designates a product as custom or customer-specified, TI products are standard, catalog, general purpose devices.

TI objects to and rejects any additional or different terms you may propose.

Copyright © 2026, Texas Instruments Incorporated

Last updated 10/2025