6-A, 3.3-V Input Non-Isolated Wide-Output Adjust Power Module

SLTS212C – MAY 2003 – REVISED MAY 2004



NOMINAL SIZE = 0.87 in x 0.5 in (22,1 mm x 12,57 mm)

Features

- Up to 6-A Output Current
- 3.3-V Input Voltage
- Wide-Output Voltage Adjust (0.8 V to 2.5 V)
- Efficiencies up to 94 %
- 103 W/in³ Power Density
- On/Off Inhibit
- Pre-Bias Startup
- Under-Voltage Lockout
- Operating Temp: –40 to +85 °C
- Auto-Track™ Sequencing
- Output Over-Current Protection (Non-Latching, Auto-Reset)
- IPC Lead Free 2
- Safety Agency Approvals: UL 1950, CSA 22.2 950, EN60950 VDE (Pending)
- Point-of-Load Alliance (POLA) Compatible

Description

The PTH03050 is one of the smallest non-isolated power modules from Texas Instruments that features Auto-Track™. Auto-Track simplifies supply voltage sequencing in power systems by enabling modules to track each other, or any other external voltage, during power up and power down.

Although small in size (0.87 in × 0.5 in), these modules are rated for up to 6 A of output current, and are an ideal choice in applications where space, performance, and a power-up sequencing capability are important attributes.

The product provides high-performance step-down conversion from a 3.3-V input bus voltage. The output voltage of the PTH03050W can be set to any voltage over the range, 0.8 V to 2.5 V, using a single resistor.

Other operating features include an on/off inhibit, output voltage adjust (trim), and output over-current protection. For high efficiency these parts employ a synchronous rectifier output stage, but a pre-bias hold-off capability ensures that the output will not sink current during startup.

Target applications include telecom, industrial, and general purpose circuits, including low-power dual-voltage systems that use a DSP, microprocessor, ASIC, or FPGA.

Package options include both through-hole and surface mount configurations.

Pin Configuration

Pin	Function
1	GND
2	Track
3	V_{in}
4	Inhibit *
5	V_o Adjust
6	V_{out}

* *Denotes negative logic:*
Open = Normal operation
Ground = Function active

Auto-Track™ Sequencing

Standard Application

R_{set} = Required to set the output voltage to a value higher than 0.8 V. (See spec. table for values)
C_{in} = Required 100 µF
Co_1 = Optional 100 µF capacitor
Co_2 = Optional 10 µF ceramic capacitor for reduced output ripple.

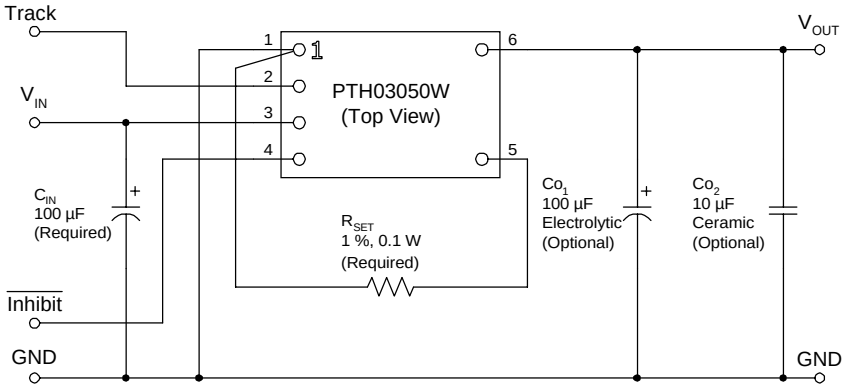

Ordering Information

Output Voltage (PTH03050❒xx)

Code	Voltage
W	0.8 V – 2.5 V (Adjust)

Package Options (PTH03050x❒❒) (1)

Code	Description	Pkg Ref. (2)
AH	Horiz. T/H	(EUU)
AS	SMD, Standard (3)	(EUV)

Notes: *(1) Add "T" to end of part number for tape and reel on SMD packages only.*
(2) Reference the applicable package reference drawing for the dimensions and PC board layout
(3) "Standard" option specifies 63/37, Sn/Pb pin solder material.

Pin Descriptions

Vin: The positive input voltage power node to the module, which is referenced to common *GND*.

Vout: The regulated positive power output with respect to the *GND* node.

GND: This is the common ground connection for the *Vin* and *Vout* power connections. It is also the 0 VDC reference for the control inputs.

Vo Adjust: A 0.1 W 1 % resistor must be directly connected between this pin and *GND* to set the output voltage to a value higher than 0.8 V. The temperature stability of the resistor should be 100 ppm/°C (or better). The set-point range for the output voltage is from 0.8 V to 2.5 V. The resistor value required for a given output voltage may be calculated from the following formula. If this pin is left open circuit, the output voltage will default to its lowest value. For further information on output voltage adjustment consult the related application note.

$$R_{set} = 10\ k\Omega \cdot \frac{0.8\ V}{V_{out} - 0.8\ V} - 2.49\ k\Omega$$

The specification table gives the preferred resistor values for a number of standard output voltages.

Inhibit: The Inhibit pin is an open-collector/drain negative logic input that is referenced to *GND*. Applying a low-level ground signal to this input disables the module's output and turns off the output voltage. When the *Inhibit* control is active, the input current drawn by the regulator is significantly reduced. If the *Inhibit* pin is left open-circuit, the module will produce an output whenever a valid input source is applied.

Track: This is an analog control input that enables the output voltage to follow an external voltage. This pin becomes active typically 20 ms after the input voltage has been applied, and allows direct control of the output voltage from 0 V up to the nominal set-point voltage. Within this range the output will follow the voltage at the *Track* pin on a volt-for-volt basis. When the control voltage is raised above this range, the module regulates at its set-point voltage. The feature allows the output voltage to rise simultaneously with other modules powered from the same input bus. If unused, the input should be connected to V_{in}. *Note: Due to the under-voltage lockout feature, the output of the module cannot follow its own input voltage during power up. For more information, consult the related application note.*

Environmental & Absolute Maximum Ratings (Voltages are with respect to GND)

Characteristics	Symbols	Conditions	Min	Typ	Max	Units
Track Input Voltage	V_{track}		–0.3	—	V_{in} + 0.3	V
Operating Temperature Range	T_a	Over V_{in} Range	–40 (i)	—	85	°C
Solder Reflow Temperature	T_{reflow}	Surface temperature of module body or pins			235 (ii)	°C
Storage Temperature	T_s	—	–40	—	125	°C
Mechanical Shock		Per Mil-STD-883D, Method 2002.3 1 msec, ½ Sine, mounted	—	500	—	G's
Mechanical Vibration		Mil-STD-883D, Method 2007.2 20-2000 Hz	—	20	—	G's
Weight	—		—	2.9	—	grams
Flammability	—	Meets UL 94V-O				

Notes: *(i) For operation below 0 °C the external capacitors m ust have stable characteristics. use either a low ESR tantalum, Os-Con, or ceramic capacitor.*
(ii) During reflow of SMD package version do not elevate peak temperature of the module, pins or internal components above the stated maximum.

Specifications (Unless otherwise stated, T_a =25 °C, V_{in} =3.3 V, V_o =2.5 V, C_{in} =100 µF, Co_1 =0 µF, Co_2 =0 µF, and I_o =$I_o$max)

			PTH03050W			
Characteristics	Symbols	Conditions	Min	Typ	Max	Units
Output Current	I_o	0.8 V ≤ V_o ≤ 2.5 V, 85 °C, natural convection	0	—	6 (1)	A
Input Voltage Range	V_{in}	Over I_o range	2.95	—	3.65	V
Set-Point Voltage Tolerance	V_o tol		—	—	±2 (2)	%V_o
Temperature Variation	ΔReg_{temp}	–40 °C <T_a < +85 °C	—	±0.5	—	%V_o
Line Regulation	ΔReg_{line}	Over V_{in} range	—	±10	—	mV
Load Regulation	ΔReg_{load}	Over I_o range	—	±12	—	mV
Total Output Variation	ΔReg_{tot}	Includes set-point, line, load, –40 °C ≤ T_a ≤ +85 °C	—	—	±3 (2)	%V_o
Efficiency	η	I_o =4 A R_{SET} = 2.21 kΩ V_o = 2.5 V	—	94	—	%
		R_{SET} = 4.12 kΩ V_o = 2.0 V	—	92	—	
		R_{SET} = 5.49 kΩ V_o = 1.8 V	—	91	—	
		R_{SET} = 8.87 kΩ V_o = 1.5 V	—	90	—	
		R_{SET} = 17.4 kΩ V_o = 1.2 V	—	88	—	
		R_{SET} = 36.5 kΩ V_o = 1.0 V	—	87	—	
V_o Ripple (pk-pk)	V_r	20 MHz bandwidth, Co_2 =10 µF ceramic	—	20 (3)	—	mVpp
Over-Current Threshold	I_o trip	Reset, followed by auto-recovery	—	12	—	A
Transient Response		1 A/µs load step, 50 to 100 % $I_o$max, Co_1 =100 µF				
	t_{tr}	Recovery Time	—	70	—	µSec
	ΔV_{tr}	V_o over/undershoot	—	100	—	mV
Track Input Current (pin 2)	I_{IL} track	Pin to GND	—	—	–130 (4)	µA
Track Slew Rate Capability	dV_{track}/dt	C_{out} ≤C_{out}(max)	—	—	1	V/ms
Under-Voltage Lockout	UVLO	V_{in} increasing	—	2.45	2.8	V
		V_{in} decreasing	2.2	2.40	—	
Inhibit Control (pin4)		Referenced to GND				
Input High Voltage	V_{IH}		V_{in} –0.5	—	Open (4)	V
Input Low Voltage	V_{IL}		–0.2	—	0.6	
Input Low Current	I_{IL} inhibit	Pin to GND	—	–130	—	µA
Input Standby Current	I_{in} inh	Inhibit (pin 4) to GND, Track (pin 2) open	—	10	—	mA
Switching Frequency	f_s	Over V_{in} and I_o ranges	550	600	650	kHz
External Input Capacitance	C_{in}		100 (5)	—	—	µF
External Output Capacitance	Co_1, Co_2	Capacitance value non-ceramic	0	100 (6)	3,300 (7)	µF
		ceramic	0	—	300	
		Equiv. series resistance (non-ceramic)	4 (8)	—	—	mΩ
Reliability	MTBF	Per Bellcore TR-332 50 % stress, T_a =40 °C, ground benign	6	—	—	10^6 Hrs

Notes: *(1) No derating is required when the module is soldered directly to a 4-layer PCB with 1 oz. copper.*
(2) The set-point voltage tolerance is affected by the tolerance and stability ofR_{SET}. The stated limit is unconditionally met if R_{SET} has a tolerance of 1 % with 100 ppm/°C or better temperature stability.
(3) The pk-pk output ripple voltage is measured with an external 10 µF ceramic capacitor. See the standard application schematic.
(4) This control pin has an internal pull-up to the input voltage Vin. If it is left open-circuit the module will operate when input power is applied. A small low-leakage (<100 nA) MOSFET is recommended for control. For further information, consult the related application note.
(5) A 100 µF input capacitor is required for proper operation. The capacitor must be rated for a minimum of 300 mA rms of ripple current.
(6) An external output capacitor is not required for basic operation. Adding 100 µF of distributed capacitance at the load will improve the transient response.
(7) This is the calculated maximum. The minimum ESR limitation will often result in a lower value. Consult the application notes for further guidance.
(8) This is the typcial ESR for all the electrolytic (non-ceramic) output capacitance. Use 7 mΩ as the minimum when using max-ESR values to calculate.

Characteristic Data; V_{in} =3.3 V *(See Note A)*

Efficiency vs Load Current

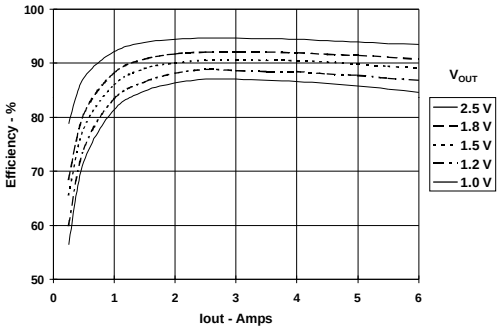

Output Ripple vs Load Current *(See Note 3 to Table)*

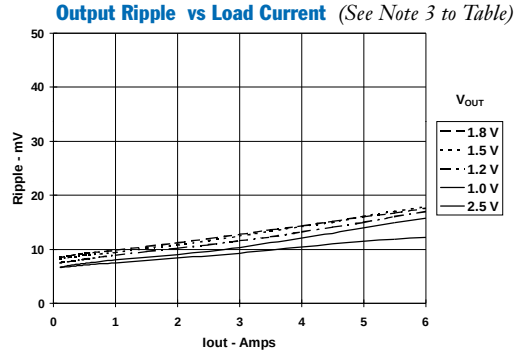

Power Dissipation vs Load Current

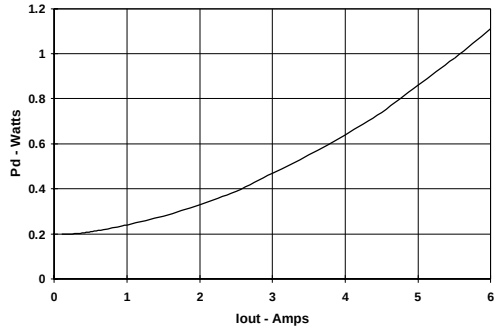

Note A: *Characteristic data has been developed from actual products tested at 25°C. This data is considered typical data for the Converter.*

Capacitor Recommendations for the PTH03050 & PTH05050 Series of Power Modules

Input Capacitor

The recommended input capacitor(s) is determined by the 100 µF [1] minimum capacitance and 300 mArms minimum ripple current rating.

Ripple current, less than 100 mΩ equivalent series resistance (ESR), and temperature are the major considerations when selecting input capacitors. Unlike polymer tantalum, regular tantalum capacitors have a recommended minimum voltage rating of 2 × (maximum DC voltage + AC ripple). This is standard practice to ensure reliability.

For improved ripple reduction on the input bus, ceramic capacitors may be used to complement electrolytic types and achieve the minimum required capacitance.

Output Capacitors (Optional)

For applications with load transients (sudden changes in load current), regulator response will benefit from an external output capacitance. The recommended output capacitance of 100 µF will allow the module to meet its transient response specification (see product data sheet). For most applications, a high quality computer-grade aluminum electrolytic capacitor is adequate. These capacitors provide decoupling over the frequency range, 2 kHz to 150 kHz, and are suitable when ambient temperatures above 0 °C. For operation below 0 °C tantalum, ceramic or Os-Con type capacitors are recommended. When using one or more non-ceramic capacitors, the calculated equivalent ESR should be no lower than 4 mΩ (7 mΩ using the manufacturer's maximum ESR for a single capacitor). A list of preferred low-ESR type capacitors are identified in Table 1-1.

Ceramic Capacitors

Above 150 kHz the performance of aluminum electrolytic capacitors becomes less effective. To further improve the reflected input ripple current or the output transient response, multilayer ceramic capacitors can also be added. Ceramic capacitors have very low ESR and their resonant frequency is higher than the bandwidth of the regulator. When used on the output their combined ESR is not critical as long as the total value of ceramic capacitance does not exceed 300 µF. Also, to prevent the formation of local resonances, do not place more than five identical ceramic capacitors in parallel with values of 10 µF or greater.

Tantalum Capacitors

Tantalum type capacitors can be used at both the input and output, and are recommended for applications where the ambient operating temperature can be less than 0 °C. The AVX TPS, Sprague 593D/594/595 and Kemet T495/T510 capacitor series are suggested over many other tantalum types due to their higher rated surge, power dissipation, and ripple current capability. As a caution many general purpose tantalum capacitors have considerably higher ESR, reduced power dissipation and lower ripple current capability. These capacitors are also less reliable as they have reduced power dissipation and surge current ratings. Tantalum capacitors that do not have a stated ESR or surge current rating are not recommended for power applications.

When specifying Os-Con and polymer tantalum capacitors for the output, the minimum ESR limit will be encountered well before the maximum capacitance value is reached.

Capacitor Table

Table 1-1 identifies the characteristics of capacitors from a number of vendors with acceptable ESR and ripple current (rms) ratings. The recommended number of capacitors required at both the input and output buses is identified for each capacitor type.

This is not an extensive capacitor list. Capacitors from other vendors are available with comparable specifications. Those listed are for guidance. The RMS ripple current rating and ESR (at 100kHz) are critical parameters necessary to insure both optimum regulator performance and long capacitor life.

Designing for Very Fast Load Transients

The transient response of the DC/DC converter has been characterized using a load transient with a di/dt of 1 A/µs. The typical voltage deviation for this load transient is given in the data sheet specification table using the optional value of output capacitance. As the di/dt of a transient is increased, the response of a converter's regulation circuit ultimately depends on its output capacitor decoupling network. This is an inherent limitation with any DC/DC converter once the speed of the transient exceeds its bandwidth capability. If the target application specifies a higher di/dt or lower voltage deviation, the requirement can only be met with additional output capacitor decoupling. In these cases special attention must be paid to the type, value and ESR of the capacitors selected.

If the transient performance requirements exceed that specified in the data sheet, or the total amount of load capacitance is above 3,000 µF, the selection of output capacitors becomes more important. For further guidance consult the separate application note, "*Selecting Output Capacitors for PTH Products in High-Performance Applications.*"

Table 1-1: Input/Output Capacitors

Capacitor Vendor, Type Series (Style)	Capacitor Characteristics					Quantity		
	Working Voltage	Value (µF)	Max. (ESR) at 100 kHz	Max. Ripple at 85 °C Current (Irms)	Physical Size (mm)	Input Bus	Output Bus	Vendor Number
Panasonic								
FC, Aluminum (SMD)	25 V	100 µF	0.300 Ω	450 mA	8×10	1	1	EEVFC1E101P
WA, Poly-Aluminum (SMD)	10 V	120 µF	0.035 Ω	2800 mA	8.3×6.9	1	≤5	EEFWA1A121P
Panasonic, Aluminum								
FC (Radial)	16 V	220 µF	0.150 Ω	555 mA	10×10.2	1	1	EEUFC1C221
FK (SMD)	16 V	330 µF	0.160 Ω	600 mA	8×10.2	1	1	EEVFK1C331P
United Chemi–Con								
FS, Os-con (Radial)	10 V	100 µF	0.040 Ω	2100 mA	6.3×9.8	1	≤5	10FS100M
PXA , Poly-Alum (SMD)	10 V	120 µF	0.027 Ω	2430 mA	8×6.7	1	≤4	PXA10VC121MH80TP
MVZ, Aluminum (SMD)	16 V	220 µF	0.170 Ω	450 mA	8×10	1	1	MVZ25VC221MH10TP
PS, Poly-Alum. (Radial)	10 V	100 µF	0.024 Ω	4420 mA	8×11.5	1	≤4	10PS270MH11
Nichicon, Aluminum								
WG, Aluminum (SMD)	35 V	100 µF	0.150 Ω	670 mA	10×10	1	1	UWG1V101MNR1GS
PM, (Radial)	25 V	150 µF	0.160 Ω	460 mA	10×11.5	1	1	UPM1E151MPH
F55, Tantalum (SMD)	10 V	100 µF	0.055 Ω	2000 mA	7.7×4.3	1	1	F551A107MN
Sanyo								
SVP, Os-con (SMD)	10 V	120 µF	0.040 Ω	>2500 mA	7×8	1	≤5	10SVP120M
SP, Os-con (Radial)	16 V	100 µF	0.025 Ω	>2800 mA	6.3×9.8	1	≤4	16SPS100M
TPE Poscap Polymer (SMD)	10 V	220 µF	0.025 Ω	>2400mA	7.3×5.7	1	≤4	10TPE220ML
AVX, Tantalum								
TPS (SMD)	10 V	100 µF	0.100 Ω	>1090 mA	7.3L	1	≤5	TPSD107M010R0100
	10 V	220 µF	0.100 Ω	>1414 mA	×4.3W ×4.1H	1	≤5	TPSV227M010R0100
Kemet								
T520, Poly-Alum (SMD)	10 V	100 µF	0.080 Ω	1200 mA	7.3L ×5.7W	1	1	T520D107M010AS
T495,Tantalum (SMD)	10 V	100 µF	0.100 Ω	>1100 mA	×4.0H	1	1	T495X107M010AS
A700-Poly-Alum. (SMD)	6.3 V	100 µF	0.018 Ω	2900 mA		1	≤3	A700D107M006AT
Vishay-Sprague								
594D, Tantalum (SMD)	10 V	150 µF	0.090 Ω	1100 mA	7.3L	1	1	594D157X0010C2T
595D, Tantalum (SMD)	10 V	120 µF	0.140 Ω	>1000 mA	×6.0W ×4.1H	1	1	595D127X0010D2T
94SA, Os-con (Radial)	10 V	100 µF	0.030 Ω	2670 mA	8×10.5	1	≤4	94SA107X0010EBP
Kemet, Ceramic X5R (SMD)	16 V	10	0.002 Ω	—	1210 case	1	≤5	C1210C106M4PAC
	6.3 V	47	0.002 Ω		3225 mm	2 [1]	≤5	C1210C476K9PAC
Murata, Ceramic X5R (SMD)	6.3 V	100	0.002 Ω	—	1210 case	1	≤3	GRM32ER60J107M
	6.3 V	47			3225 mm	2 [1]	≤5	GRM32ER60J476M
	16 V	22				5	≤5	GRM32ER61C226K
	16 V	10				1 [2]	≤5	GRM32DR61C106K
TDK, Ceramic X5R (SMD)	6.3 V	100	0.002 Ω	—	1210 case	1	≤3	C3225X5R0J107MT
	6.3 V	47			3225 mm	2 [1]	≤5	C3225X5R0J476MT
	16 V	22				5	≤5	C3225X5R1C226MT
	16 V	10				1 [2]	≤5	C3225X5R1C106MT

[1] Total capacitance of 94 µF is acceptable based on the combined ripple current rating.
[2] Small ceramic capacitors may be used to complement electrolytic types at the input to reduce high-frequency ripple current.

Adjusting the Output Voltage of the PTH03050W & PTH05050W Wide-Output Adjust Power Modules

The *V_o Adjust* control (pin 5) sets the output voltage to a value higher than 0.8 V. The adjustment range of the PT03050W (3.3-V input) is from 0.8 V to 2.5 V [1], and the PTH05050W (5-V input) from 0.8 V to 3.6 V. The adjustment method requires the addition of a single external resistor, R_{set}, that must be connected directly between the *V_o Adjust* and *GND* pins [2]. Table 2-1 gives the preferred value of the external resistor for a number of standard voltages, along with the actual output voltage that this resistance value provides.

For other output voltages the value of the required resistor can either be calculated using the following formula, or simply selected from the range of values given in Table 2-2. Figure 2-1 shows the placement of the required resistor.

$$R_{set} = 10\,k\Omega \cdot \frac{0.8\ V}{V_{out} - 0.8\ V} - 2.49\,k\Omega$$

Table 2-1; Preferred Values of R_{set} for Standard Output Voltages

V_{out} (Standard)	R_{set} (Pref'd Value)	V_{out} (Actual)
3.3 V [1]	698 Ω	3.309V
2.5 V	2.21 kΩ	2.502 V
2 V	4.12 kΩ	2.010 V
1.8 V	5.49 kΩ	1.803 V
1.5 V	8.87 kΩ	1.504 V
1.2 V	17.4 kΩ	1.202 V
1 V	36.5 kΩ	1.005 V
0.8 V	Open	0.8 V

Figure 2-1; V_o Adjust Resistor Placement

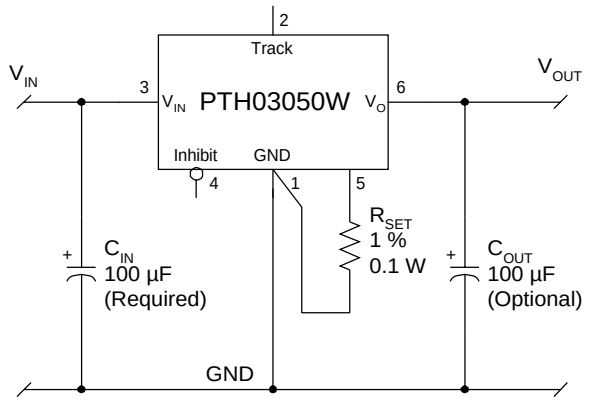

Table 2-2; Output Voltage Set-Point Resistor Values

V_a Req'd	R_{set}	V_a Req'd	R_{set}
0.800	Open	2.00	4.18 kΩ
0.825	318 kΩ	2.05	3.91 kΩ
0.850	158 kΩ	2.10	3.66 kΩ
0.875	104 kΩ	2.15	3.44 kΩ
0.900	77.5 kΩ	2.20	3.22 kΩ
0.925	61.5 kΩ	2.25	3.03 kΩ
0.950	50.8 kΩ	2.30	2.84 kΩ
0.975	43.2 kΩ	2.35	2.67 kΩ
1.000	37.5 kΩ	2.40	2.51 kΩ
1.025	33.1 kΩ	2.45	2.36 kΩ
1.050	29.5 kΩ	2.50	2.22 kΩ
1.075	26.6 kΩ	2.55	2.08 kΩ
1.100	24.2 kΩ	2.60	1.95 kΩ
1.125	22.1 kΩ	2.65	1.83 kΩ
1.150	20.4 kΩ	2.70	1.72 kΩ
1.175	18.8 kΩ	2.75	1.61 kΩ
1.200	17.5 kΩ	2.80	1.51 kΩ
1.225	16.3 kΩ	2.85	1.41 kΩ
1.250	15.3 kΩ	2.90	1.32 kΩ
1.275	14.4 kΩ	2.95	1.23 kΩ
1.300	13.5 kΩ	3.00	1.15 kΩ
1.325	12.7 kΩ	3.05	1.07 kΩ
1.350	12.1 kΩ	3.10	988 Ω
1.375	11.4 kΩ	3.15	914 Ω
1.400	10.8 kΩ	3.20	843 Ω
1.425	10.3 kΩ	3.25	775 Ω
1.450	9.82 kΩ	3.30	710 Ω
1.475	9.36 kΩ	3.35	647 Ω
1.50	8.94 kΩ	3.40	587 Ω
1.55	8.18 kΩ	3.45	529 Ω
1.60	7.51 kΩ	3.50	473 Ω
1.65	6.92 kΩ	3.55	419 Ω
1.70	6.4 kΩ	3.60	367 Ω
1.75	5.93 kΩ		
1.80	5.51 kΩ		
1.85	5.13 kΩ		
1.90	4.78 kΩ		
1.95	4.47 kΩ		

Notes:

1. Modules that operate from a 3.3-V input bus should not be adjusted higher than 2.5 V.
2. A 0.05-W resistor may be used. The tolerance should be 1%, with temperature stability of 100 ppm/°C (or better). Place the resistor as close to the regulator as possible. Connect the resistor directly between pins 5 and 1 using dedicated PCB traces.
3. Never connect capacitors from *V_o Adjust* to either *GND* or *V_{out}*. Any capacitance added to the *V_o Adjust* pin will affect the stability of the regulator.

Features of the PTH Family of Non-Isolated Wide Output Adjust Power Modules

POLA™ Compatibility

The PTH/PTV family of non-isolated, wide-output adjust power modules from Texas Instruments are optimized for applications that require a flexible, high performance module that is small in size. Each of these products are POLA™ compatible. POLA-compatible products are produced by a number of manufacturers, and offer customers advanced, non-isolated modules with the same footprint and form factor. POLA parts are also asssured to be interoperable, thereby providing customers with true second- source availability.

From the basic, "Just Plug it In" functionality of the 6-A modules, to the 30-A rated feature-rich PTHxx030, these products were designed to be very flexible, yet simple to use. The features vary with each product. Table 3-1 provides a quick reference to the features by product series and input bus voltage.

Table 3-1; Operating Features by Series and Input Bus Voltage

Series	Input Bus	I_{OUT}	Adjust (Trim)	On/Off Inhibit	Over-Current	Pre-Bias Startup	Auto-Track™	Margin Up/Down	Output Sense	Thermal Shutdown
PTHxx050	3.3 V	6 A	•	•	•	•	•			
	5 V	6 A	•	•	•	•	•			
	12 V	6 A	•	•	•	•	•			
PTHxx060	3.3 V / 5 V	10 A	•	•	•	•	•	•	•	
	12 V	8 A	•	•	•	•	•	•	•	
PTHxx010	3.3 V / 5 V	15 A	•	•	•	•	•	•	•	
	12 V	12 A	•	•	•	•	•	•	•	
PTVxx010	5 V	8 A	•	•	•	•	•		•	
	12 V	8 A	•	•	•	•	•		•	
PTHxx020	3.3 V / 5 V	22 A	•	•	•	•	•	•	•	•
	12 V	18 A	•	•	•	•	•	•	•	•
PTVxx020	5 V	18 A	•	•	•	•	•		•	•
	12 V	16 A	•	•	•	•	•		•	•
PTHxx030	3.3 V / 5 V	30 A	•	•	•	•	•	•	•	•
	12 V	26 A	•	•	•	•	•	•	•	•

For simple point-of-use applications, the PTHxx050 provides operating features such as an on/off inhibit, output voltage trim, pre-bias startup, and over-current protection. The PTHxx060 (10 A), and PTHxx010 (15/12 A) include an output voltage sense, and margin up/down controls. Then the higher output current, PTHxx020 and PTHxx030 products incorporate over-temperature shutdown protection.

The PTVxx010 and PTVxx020 are similar parts offered in a vertical, single in-line pin (SIP) profile, at slightly lower current ratings.

All of the products referenced in Table 3-1 include Auto-Track™. This feature was specifically designed to simplify the task of sequencing the supply voltages in a power system. This and other features are described in the following sections.

Soft-Start Power Up

The Auto-Track feature allows the power-up of multiple modules to be directly controlled from their *Track* pin. However in a stand-alone configuration, or when the Auto-Track feature is not being used, the *Track* pin should be directly connected to the input voltage, V_{in} (see Figure 3-1).

Figure 3–1

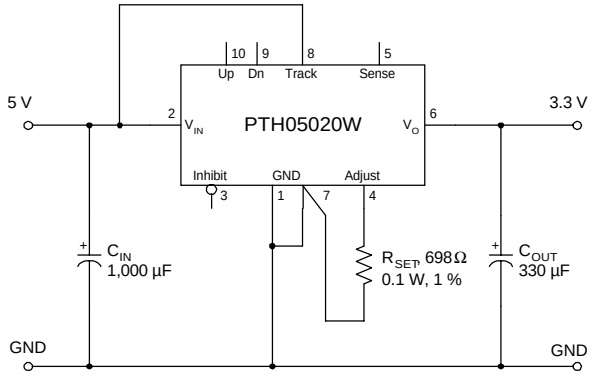

When the *Track* pin is connected to the input voltage the Auto-Track function is permanently disengaged. This allows the module to power up entirely under the control of its internal soft-start circuitry. When power up is under soft-start control, the output voltage rises to the set-point at a quicker and more linear rate.

Figure 3–2

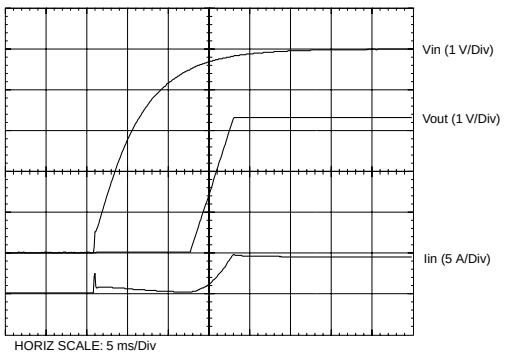

From the moment a valid input voltage is applied, the soft-start control introduces a short time delay (typically 5 ms-10 ms) before allowing the output voltage to rise. The output then progressively rises to the module's set-point voltage. Figure 3-2 shows the soft-start power-up characteristic of the 22-A output product (PTH05020W), operating from a 5-V input bus and configured for a 3.3-V output. The waveforms were measured with a 5-A resistive load, with Auto-Track disabled. The initial rise in input current when the input voltage first starts to rise is the charge current drawn by the input capacitors. Power-up is complete within 15 ms.

Over-Current Protection

For protection against load faults, all modules incorporate output over-current protection. Applying a load that exceeds the regulator's over-current threshold will cause the regulated output to shut down. Following shutdown a module will periodically attempt to recover by initiating a soft-start power-up. This is described as a "hiccup" mode of operation, whereby the module continues in a cycle of successive shutdown and power up until the load fault is removed. During this period, the average current flowing into the fault is significantly reduced. Once the fault is removed, the module automatically recovers and returns to normal operation.

Over-Temperature Protection

The PTHxx020 and PTHxx030 series of products have over-temperature protection. These products have an on-board temperature sensor that protects the module's internal circuitry against excessively high temperatures. A rise in the internal temperature may be the result of a drop in airflow, or a high ambient temperature. If the internal temperature exceeds the OTP threshold, the module's *Inhibit* control is automatically pulled low. This turns the output off. The output voltage will drop as the external output capacitors are discharged by the load circuit. The recovery is automatic, and begins with a soft-start power up. It occurs when the the sensed temperature decreases by about 10 °C below the trip point.

Note: The over-temperature protection is a last resort mechanism to prevent thermal stress to the regulator. Operation at or close to the thermal shutdown temperature is not recommended and will reduce the long-term reliability of the module. Always operate the regulator within the specified Safe Operating Area (SOA) limits for the worst-case conditions of ambient temperature and airflow.

Output On/Off Inhibit

For applications requiring output voltage on/off control, each series of the PTH family incorporates an output *Inhibit* control pin. The inhibit feature can be used wherever there is a requirement for the output voltage from the regulator to be turned off.

The power modules function normally when the *Inhibit* pin is left open-circuit, providing a regulated output whenever a valid source voltage is connected to V_{in} with respect to *GND*.

Figure 3-3 shows the typical application of the inhibit function. Note the discrete transistor (Q_1). The *Inhibit* control has its own internal pull-up to V_{in} potential. The input is not compatible with TTL logic devices. An open-collector (or open-drain) discrete transistor is recommended for control.

Figure 3–3

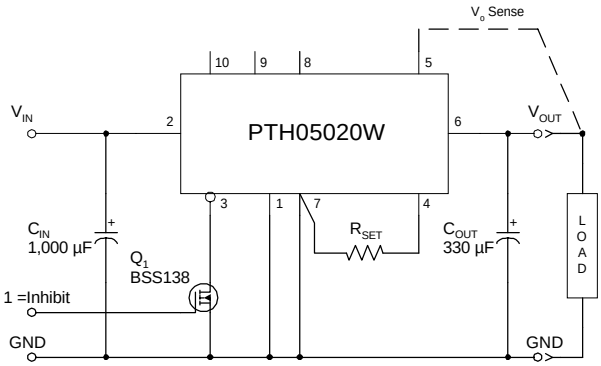

Turning Q_1 on applies a low voltage to the *Inhibit* control and disables the output of the module. If Q_1 is then turned off, the module will execute a soft-start power-up. A regulated output voltage is produced within 20 msec. Figure 3-4 shows the typical rise in both the output voltage and input current, following the turn-off of Q_1. The turn off of Q_1 corresponds to the rise in the waveform, Q_1 V_{ds}. The waveforms were measured with a 5-A load.

Figure 3–4

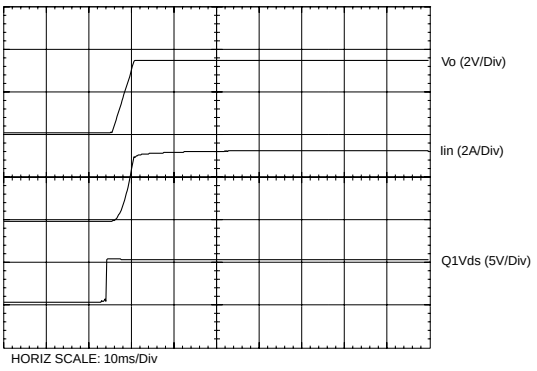

Auto-Track™ Function

The Auto-Track function is unique to the PTH/PTV family, and is available with the all POLA-compatible products. Auto-Track was designed to simplify the amount of circuitry required to make the output voltage from each module power up and power down in sequence. The sequencing of two or more supply voltages during power up is a common requirement for complex mixed-signal applications, that use dual-voltage VLSI ICs such as DSPs, micro-processors, and ASICs.

How Auto-Track Works

Auto-Track works by forcing the module's output voltage to follow a voltage presented at the *Track* control pin. This control range is limited to between 0 V and the module's set-point voltage. Once the track-pin voltage is raised above the set-point voltage, the module's output remains at its set-point [1]. As an example, if the Track pin of a 2.5-V regulator is at 1 V, the regulated output will be 1 V. But if the voltage at the Track pin rises to 3 V, the regulated output will not go higher than 2.5 V.

When under track control, the regulated output from the module follows the voltage at its Track pin on a volt-for-volt basis. By connecting the Track pin of a number of these modules together, the output voltages will follow a common signal during power-up and power-down. The control signal can be an externally generated master ramp waveform, or the output voltage from another power supply circuit [3]. For convenience the Track control incorporates an internal RC charge circuit. This operates off the module's input voltage to provide a suitable rising voltage ramp waveform.

Typical Application

The basic implementation of Auto-Track allows for simultaneous voltage sequencing of a number of Auto-Track compliant modules. Connecting the Track control pins of two or more modules forces the Track control of all modules to follow the same collective RC ramp waveform, and allows them to be controlled through a single transistor or switch; Q_1 in Figure 3-5.

To initiate a power-up sequence the Track control must first pulled to ground potential. This should be done at or before input power is applied to the modules, and then held for at least 10 ms thereafter. This brief period gives the modules time to complete their internal soft-start initialization, which enables them to produce an output voltage.

Applying a logic-level high signal to the circuit's On/Off Control turns Q_1 on and applies a ground signal to the Track control. After completing their internal soft-start intialization, the output of all modules will remain at zero volts while Q_1 is on. 10 ms after a valid input voltage has been applied to all modules, Q_1 can be turned off. This allows the track control voltage to automatically rise toward to the modules' input voltage. During this period the output voltage of each module will rise in unison with other modules, to its respective set-point voltage.

Figure 3-6 shows the output voltage waveforms from the circuit of Figure 3-5 after the On/Off Control is set from a high to a low-level voltage. The waveforms, Vo_1 and Vo_2 represent the output voltages from the two power modules, U_1 (3.3 V) and U_2 (1.8 V) respectively. Vo_1 and Vo_2 are shown rising together to produce the desired simultaneous power-up characteristic.

The same circuit also provides a power-down sequence. Power down is the reverse of power up, and is accomplished by lowering the track control voltage back to zero volts. The important constraint is that a valid input voltage must be maintained until the power down is complete. It also requires that Q_1 be turned off relatively slowly. This is so that the Track control voltage does not fall faster than Auto-Track's slew rate capability, which is 1 V/ms. The components R_1 and C_1 in Figure 3-5 limit the rate at which Q_1 can pull down the Track control voltage. The values of 100 k-ohm and 0.1 µF correlate to a decay rate of about 0.17 V/ms.

The power-down sequence is initiated with a low-to-high transition at the On/Off Control input to the circuit. Figure 3-7 shows the power-down waveforms. As the Track control voltage falls below the nominal set-point voltage of each power module, then its output voltage decays with all the other modules under Auto-Track control.

Notes on Use of Auto-Track™

1. The Track pin voltage must be allowed to rise above the module's set-point voltage before the module can regulate at its adjusted set-point voltage.
2. The Auto-Track function will track almost any voltage ramp during power up, and is compatible with ramp speeds of up to 1 V/ms.
3. The absolute maximum voltage that may be applied to the Track pin is V_{in}.
4. The module will not follow a voltage at its Track control input until it has completed its soft-start initialization. This takes about 10 ms from the time that the module has sensed that a valid voltage has been applied its input. During this period, it is recommended that the Track pin be held at ground potential.
5. The module is capable of both sinking and sourcing current when following a voltage at its Track pin. Therefore startup into an output prebias is not supported during Auto-Track control. *Note: A pre-bias holdoff is not necessary when all supply voltages rise simultaneously under the control of Auto-Track.*
6. The Auto-Track function can be disabled by connecting the *Track* pin to the input voltage (V_{in}). With Auto-Track disabled, the output voltage will rise at a quicker and more linear rate after input power is applied.

Figure 3–5; Sequenced Power Up & Power Down Using Auto-Track

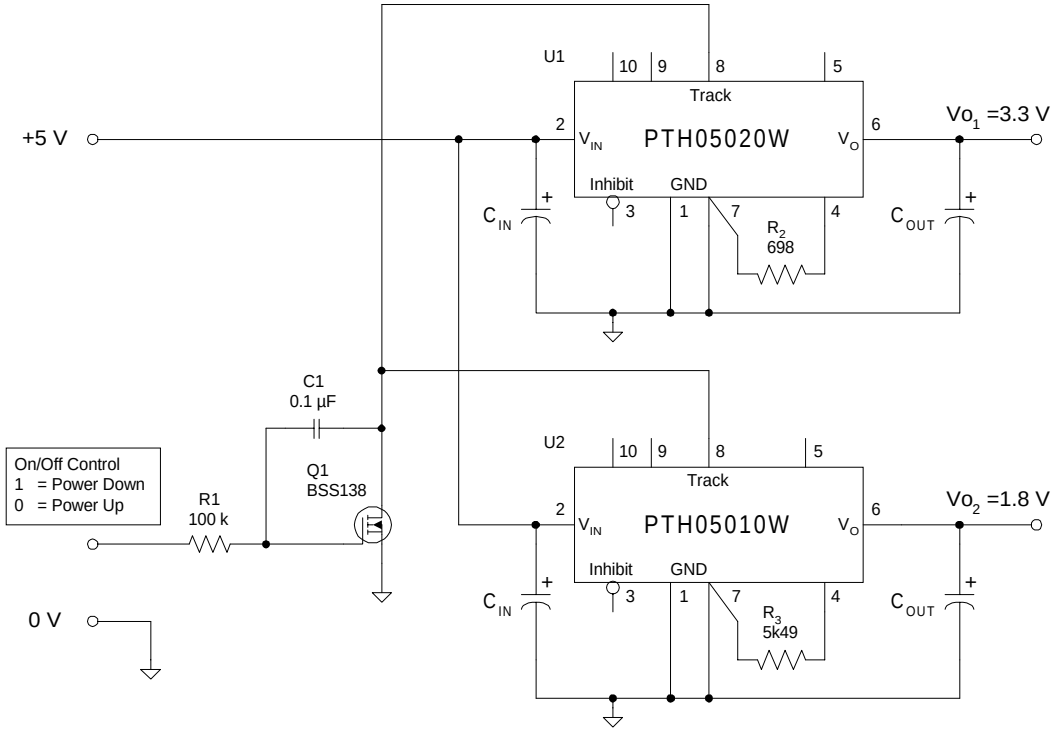

Figure 3–6; Simultaneous Power Up with Auto-Track Control

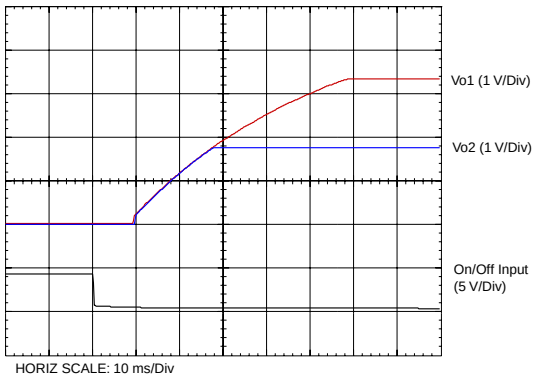

Figure 3–7; Simultaneous Power Down with Auto-Track Control

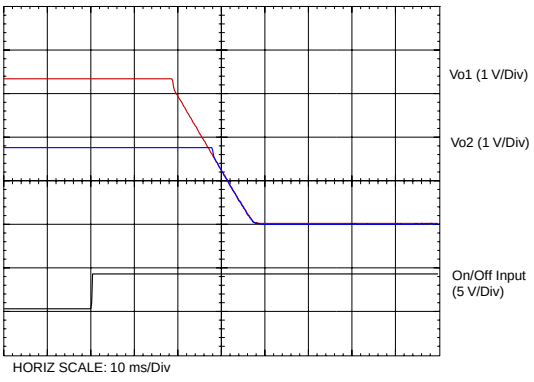

Margin Up/Down Controls

The PTHxx060, PTHxx010, PTHxx020, and PTHxx030 products incorporate *Margin Up* and *Margin Down* control inputs. These controls allow the output voltage to be momentarily adjusted [1], either up or down, by a nominal 5%. This provides a convenient method for dynamically testing the operation of the load circuit over its supply margin or range. It can also be used to verify the function of supply voltage supervisors. The ±5% change is applied to the adjusted output voltage, as set by the external resistor, R_{set} at the *V_o Adjust* pin.

The 5% adjustment is made by pulling the appropriate margin control input directly to the *GND* terminal [2]. A low-leakage open-drain device, such as an n-channel MOSFET or p-channel JFET is recommended for this purpose [3]. Adjustments of less than 5% can also be accommodated by adding series resistors to the control inputs. The value of the resistor can be selected from Table 3-2, or calculated using the following formula.

Up/Down Adjust Resistance Calculation

To reduce the margin adjustment to a value less than 5%, series resistors are required (See R_D and R_U in Figure 3-8). For the same amount of adjustment, the resistor value calculated for R_U and R_D will be the same. The formulas is as follows.

$$R_U \text{ or } R_D = \frac{499}{\Delta\%} - 99.8 \quad k\Omega$$

Where $\Delta\%$ = The desired amount of margin adjust in percent.

Notes:

1. The *Margin Up** and *Margin Dn** controls were not intended to be activated simultaneously. If they are their affects on the output voltage may not completely cancel, resulting in the possibility of a slightly higher error in the output voltage set point.
2. The ground reference should be a direct connection to the module *GND* at pin 7 (pin 1 for the PTHxx050). This will produce a more accurate adjustment at the load circuit terminals. The transistors Q_1 and Q_2 should be located close to the regulator.
3. The Margin Up and Margin Dn control inputs are not compatible with devices that source voltage. This includes TTL logic. These are analog inputs and should only be controlled with a true open-drain device (preferably a discrete MOSFET transistor). The device selected should have low off-state leakage current. Each input sources 8 µA when grounded, and has an open-circuit voltage of 0.8 V.

Table 3-2; Margin Up/Down Resistor Values

% Adjust	R_U / R_D
5	0.0 kΩ
4	24.9 kΩ
3	66.5 kΩ
2	150.0 kΩ
1	397.0 kΩ

Figure 3–8; Margin Up/Down Application Schematic

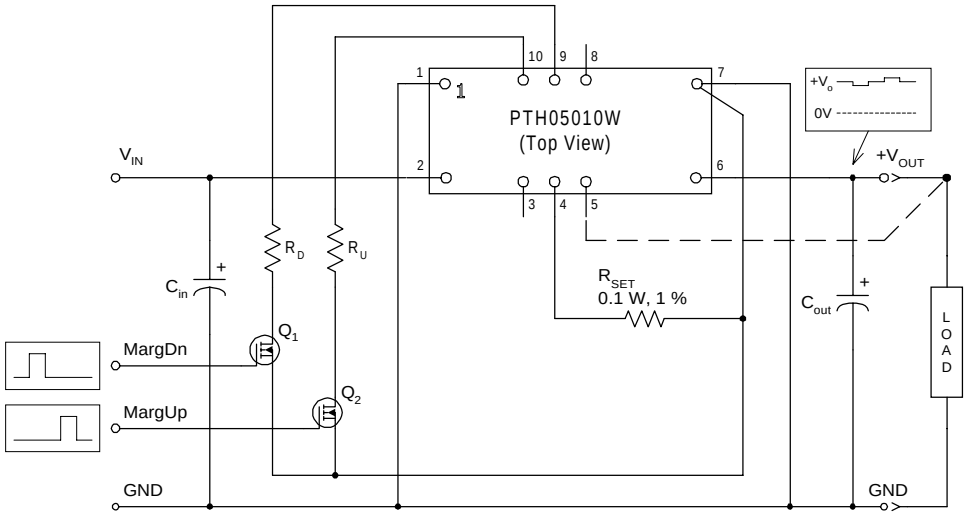

Pre-Bias Startup Capability

A pre-bias startup condition occurs as a result of an external voltage being present at the output of a power module prior to its output becoming active. This often occurs in complex digital systems when current from another power source is backfed through a dual-supply logic component, such as an FPGA or ASIC. Another path might be via clamp diodes as part of a dual-supply power-up sequencing arrangement. A prebias can cause problems with power modules that incorporate synchronous rectifiers. This is because under most operating conditions, these types of modules can sink as well as source output current.

The PTH/PTV family of power modules incorporate synchronous rectifiers, but will not sink current during startup [1], or whenever the *Inhibit* pin is held low. However, to ensure satisfactory operation of this function, certain conditions must be maintained. [2] Figure 3-9 shows an application demonstrating the pre-bias startup capability. The start-up waveforms are shown in Figure 3-10. Note that the output current from the PTH03010W (I_o) shows negligible current until its output voltage rises above that backfed through diodes D_1 and D_2.

Note: The pre-bias start-up feature is not compatible with Auto-Track. When the module is under Auto-Track control, it will sink current if the output voltage is below that of a back-feeding source. To ensure a pre-bias hold-off one of two approaches must be followed when input power is applied to the module. The Auto-Track function must either be disabled [3], or the module's output held off (for at least 50 ms) using the Inhibit pin. Either approach ensures that the Track pin voltage is above the set-point voltage at start up.

Notes

1. Startup includes the short delay (approx. 10 ms) prior to the output voltage rising, followed by the rise of the output voltage under the module's internal soft-start control. Startup is complete when the output voltage has risen to either the set-point voltage or the voltage at the *Track* pin, whichever is lowest.
2. To ensure that the regulator does not sink current when power is first applied (even with a ground signal applied to the *Inhibit* control pin), the input voltage must always be greater than the output voltage throughout the power-up and power-down sequence.
3. The Auto-Track function can be disabled at power up by immediately applying a voltage to the module's *Track* pin that is greater than its set-point voltage. This can be easily accomplished by connecting the *Track* pin to V_{in}.

Figure 3–10; Pre-Bias Startup Waveforms

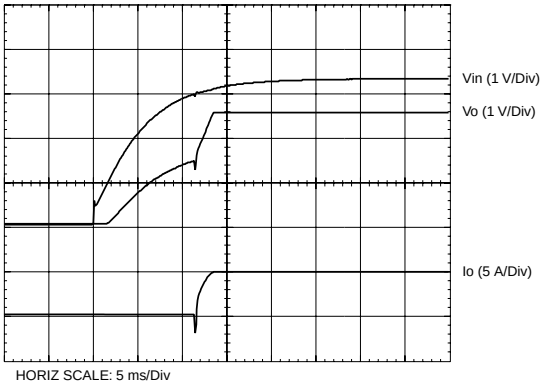

Figure 3–9; Application Circuit Demonstrating Pre-Bias Startup

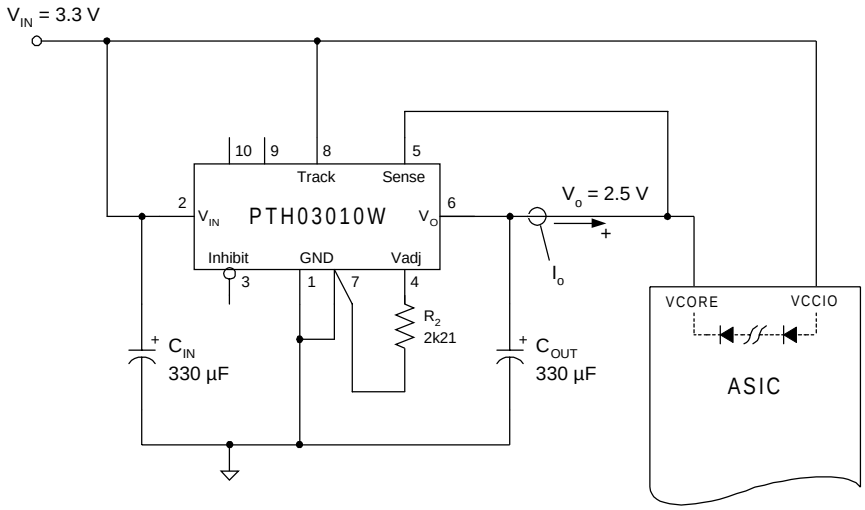

Remote Sense

Products with this feature incorporate an output voltage sense pin, V_o *Sense*. A remote sense improves the load regulation performance of the module by allowing it to compensate for any 'IR' voltage drop between itself and the load. An IR drop is caused by the high output current flowing through the small amount of pin and trace resistance. To use this feature simply connect the V_o *Sense* pin to the V_{out} node, close to the load circuit (see data sheet standard application). If not used, the V_o *Sense* pin can be left open-circuit. An internal low-value resistor (15-Ω or less) is connected between the V_o *Sense* and V_{out}. This ensures the output voltage remains in regulation.

With the sense pin connected, the difference between the voltage measured directly between the V_{out} and *GND* pins, and that measured from V_o *Sense* to *GND*, is the amount of IR drop being compensated by the regulator. This should be limited to a maximum of 0.3 V.

Note: The remote sense feature is not designed to compensate for the forward drop of non-linear or frequency dependent components that may be placed in series with the converter output. Examples include OR-ing diodes, filter inductors, ferrite beads, and fuses. When these components are enclosed by the remote sense connection they are effectively placed inside the regulation control loop, which can adversely affect the stability of the regulator.

PACKAGING INFORMATION

Orderable part number	Status (1)	Material type (2)	Package | Pins	Package qty | Carrier	RoHS (3)	Lead finish/ Ball material (4)	MSL rating/ Peak reflow (5)	Op temp (°C)	Part marking (6)
PTH03050WAD	Obsolete	Production	Through-Hole Module (EUU) | 6	-	-			-40 to 85	
PTH03050WAH	Obsolete	Production	Through-Hole Module (EUU) | 6	-	Exempt	SN	N/A for Pkg Type	-40 to 85	
PTH03050WAS	Obsolete	Production	Surface Mount Module (EUV) | 6	-	-			-40 to 85	
PTH03050WAST	Obsolete	Production	Surface Mount Module (EUV) | 6	-	-			-40 to 85	
PTH03050WAZ	Obsolete	Production	Surface Mount Module (EUV) | 6	-	-			-40 to 85	
PTH03050WAZT	Obsolete	Production	Surface Mount Module (EUV) | 6	-	-			-40 to 85	

(1) **Status:** For more details on status, see our product life cycle.

(2) **Material type:** When designated, preproduction parts are prototypes/experimental devices, and are not yet approved or released for full production. Testing and final process, including without limitation quality assurance, reliability performance testing, and/or process qualification, may not yet be complete, and this item is subject to further changes or possible discontinuation. If available for ordering, purchases will be subject to an additional waiver at checkout, and are intended for early internal evaluation purposes only. These items are sold without warranties of any kind.

(3) **RoHS values:** Yes, No, RoHS Exempt. See the TI RoHS Statement for additional information and value definition.

(4) **Lead finish/Ball material:** Parts may have multiple material finish options. Finish options are separated by a vertical ruled line. Lead finish/Ball material values may wrap to two lines if the finish value exceeds the maximum column width.

(5) **MSL rating/Peak reflow:** The moisture sensitivity level ratings and peak solder (reflow) temperatures. In the event that a part has multiple moisture sensitivity ratings, only the lowest level per JEDEC standards is shown. Refer to the shipping label for the actual reflow temperature that will be used to mount the part to the printed circuit board.

(6) **Part marking:** There may be an additional marking, which relates to the logo, the lot trace code information, or the environmental category of the part.

Multiple part markings will be inside parentheses. Only one part marking contained in parentheses and separated by a "~" will appear on a part. If a line is indented then it is a continuation of the previous line and the two combined represent the entire part marking for that device.

Important Information and Disclaimer: The information provided on this page represents TI's knowledge and belief as of the date that it is provided. TI bases its knowledge and belief on information provided by third parties, and makes no representation or warranty as to the accuracy of such information. Efforts are underway to better integrate information from third parties. TI has taken and continues to take reasonable steps to provide representative and accurate information but may not have conducted destructive testing or chemical analysis on incoming materials and chemicals. TI and TI suppliers consider certain information to be proprietary, and thus CAS numbers and other limited information may not be available for release.

In no event shall TI's liability arising out of such information exceed the total purchase price of the TI part(s) at issue in this document sold by TI to Customer on an annual basis.

EUU (R–PDSS–T6) DOUBLE SIDED MODULE

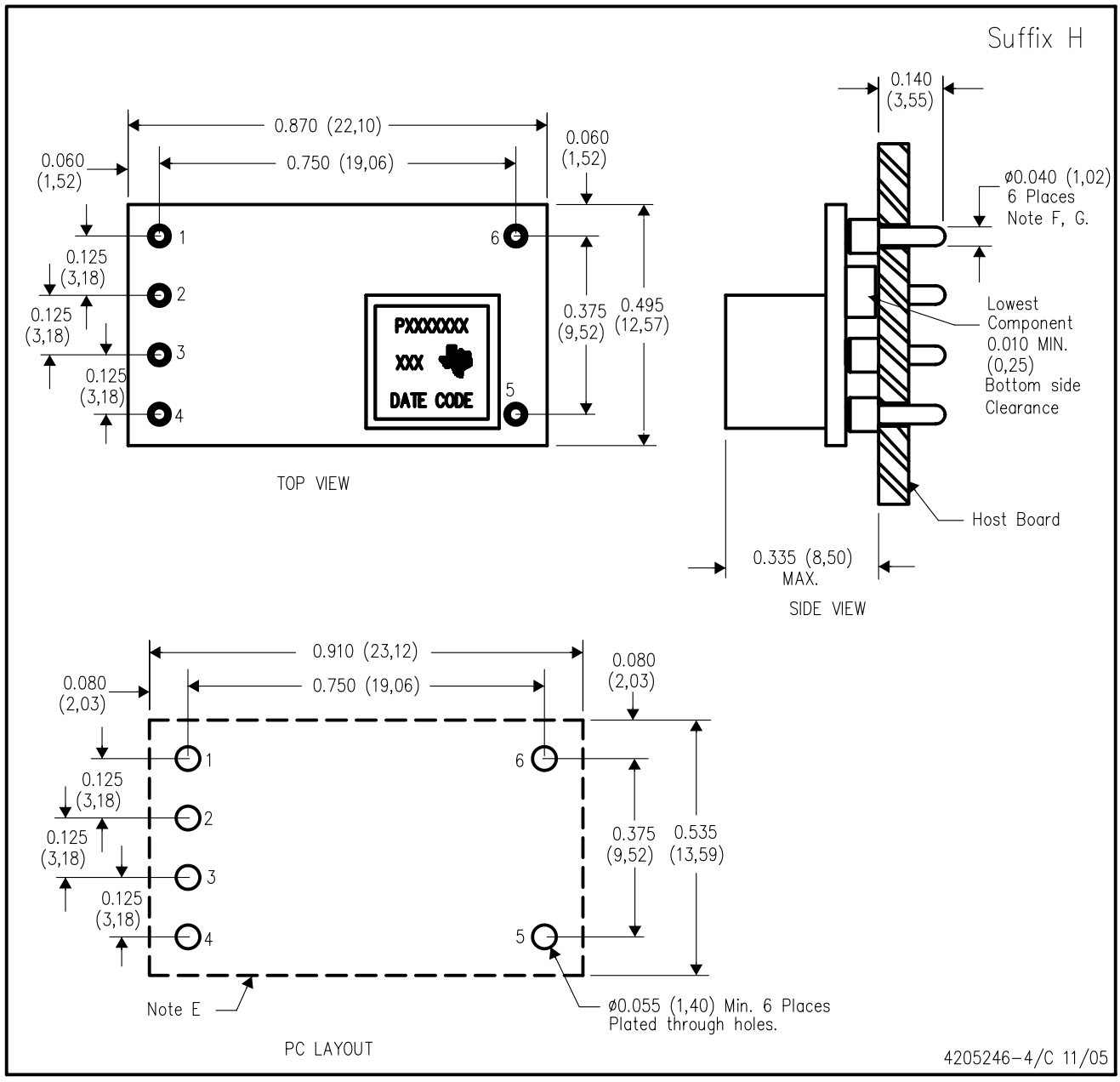

NOTES:
A. All linear dimensions are in inches (mm).
B. This drawing is subject to change without notice.
C. 2 place decimals are ±0.030 (±0,76mm).
D. 3 place decimals are ±0.010 (±0,25mm).
E. Recommended keep out area for user components.
F. Pins are 0.040" (1,02) diameter with 0.070" (1,78) diameter standoff shoulder.
G. All pins: Material – Copper Alloy
Finish – Tin (100%) over Nickel plate

EUV (R–PDSS–B6) DOUBLE SIDED MODULE

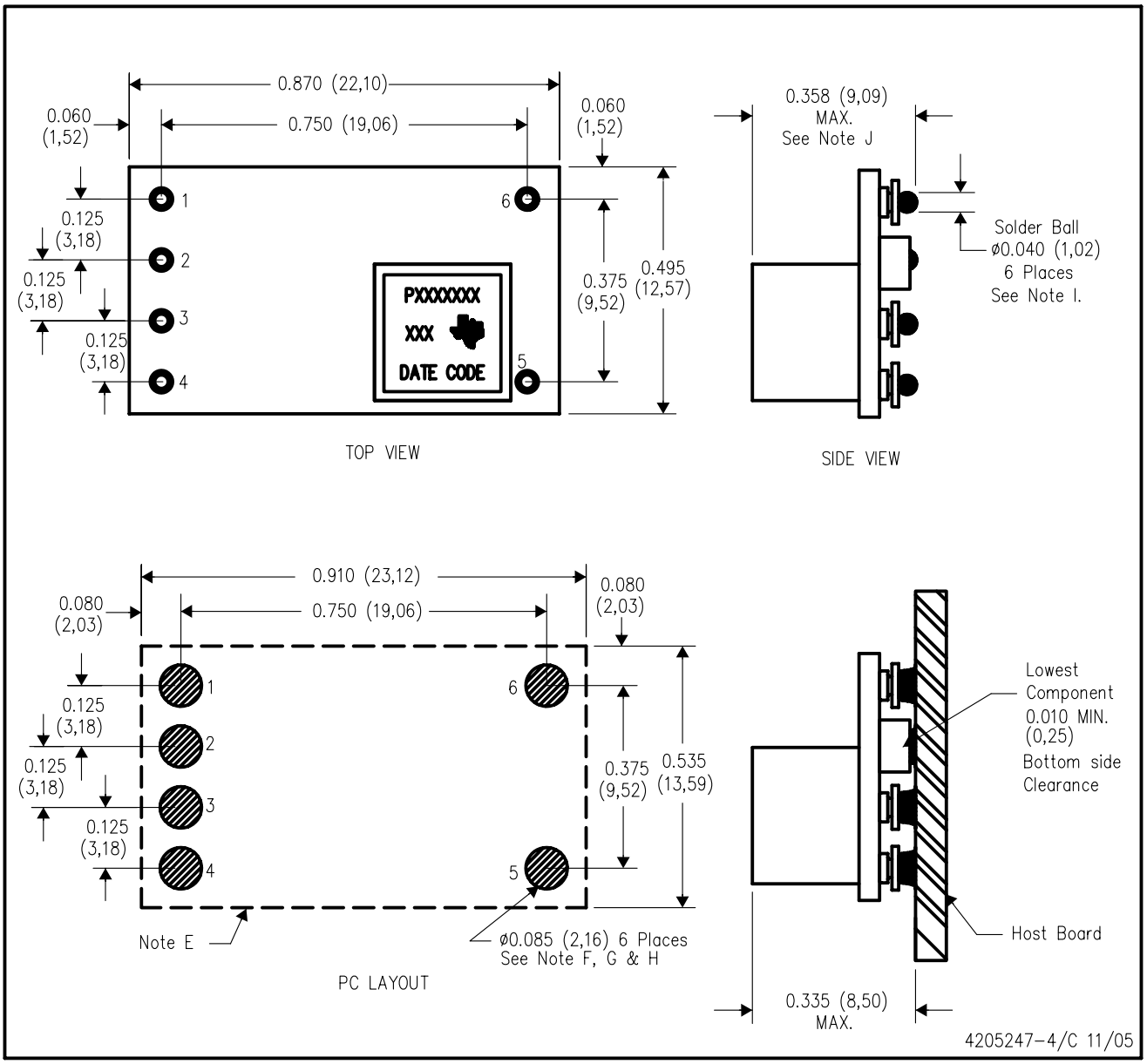

NOTES:
A. All linear dimensions are in inches (mm).
B. This drawing is subject to change without notice.
C. 2 place decimals are ±0.030 (±0,76mm).
D. 3 place decimals are ±0.010 (±0,25mm).
E. Recommended keep out area for user components.
F. Power pin connection should utilize two or more vias to the interior power plane of 0.025 (0,63) I.D. per input, ground and output pin (or the electrical equivalent).
G. Paste screen opening: 0.080 (2,03) to 0.085 (2,16). Paste screen thickness: 0.006 (0,15).
H. Pad type: Solder mask defined.
I. All pins: Material – Copper Alloy
Finish – Tin (100%) over Nickel plate
Solder Ball – See product data sheet.
J. Dimension prior to reflow solder.

IMPORTANT NOTICE AND DISCLAIMER

TI PROVIDES TECHNICAL AND RELIABILITY DATA (INCLUDING DATASHEETS), DESIGN RESOURCES (INCLUDING REFERENCE DESIGNS), APPLICATION OR OTHER DESIGN ADVICE, WEB TOOLS, SAFETY INFORMATION, AND OTHER RESOURCES “AS IS” AND WITH ALL FAULTS, AND DISCLAIMS ALL WARRANTIES, EXPRESS AND IMPLIED, INCLUDING WITHOUT LIMITATION ANY IMPLIED WARRANTIES OF MERCHANTABILITY, FITNESS FOR A PARTICULAR PURPOSE OR NON-INFRINGEMENT OF THIRD PARTY INTELLECTUAL PROPERTY RIGHTS.

These resources are intended for skilled developers designing with TI products. You are solely responsible for (1) selecting the appropriate TI products for your application, (2) designing, validating and testing your application, and (3) ensuring your application meets applicable standards, and any other safety, security, regulatory or other requirements.

These resources are subject to change without notice. TI grants you permission to use these resources only for development of an application that uses the TI products described in the resource. Other reproduction and display of these resources is prohibited. No license is granted to any other TI intellectual property right or to any third party intellectual property right. TI disclaims responsibility for, and you fully indemnify TI and its representatives against any claims, damages, costs, losses, and liabilities arising out of your use of these resources.

TI’s products are provided subject to TI’s Terms of Sale, TI’s General Quality Guidelines, or other applicable terms available either on ti.com or provided in conjunction with such TI products. TI’s provision of these resources does not expand or otherwise alter TI’s applicable warranties or warranty disclaimers for TI products. Unless TI explicitly designates a product as custom or customer-specified, TI products are standard, catalog, general purpose devices.

TI objects to and rejects any additional or different terms you may propose.

Copyright © 2026, Texas Instruments Incorporated

Last updated 10/2025