OPAx991 40-V Rail-to-Rail Input/Output, Low Offset Voltage, Low Noise Op Amp

1 Features

- Low offset voltage: ±125 µV
- Low offset voltage drift: ±0.3 µV/°C
- Low noise: 10.8 nV/√Hz at 1 kHz
- High common-mode rejection: 130 dB
- Low bias current: ±10 pA
- Rail-to-rail input and output
- Wide bandwidth: 4.5 MHz GBW
- High slew rate: 21 V/µs
- High capacitive load drive: 1 nF
- MUX-friendly/comparator inputs
  - Amplifier operates with differential inputs up to supply rail
  - Amplifier can be used in open-loop or as comparator
- Low quiescent current: 560 µA per amplifier
- Wide supply: ±1.35 V to ±20 V, 2.7 V to 40 V
- Robust EMIRR performance: EMI/RFI filters on input and supply pins
- Differential and common-mode input voltage range to supply rail

2 Applications

- Low-power audio preamplifier
- Multiplexed data-acquisition systems
- Test and measurement equipment
- ADC driver amplifiers
- SAR ADC reference buffers
- Programmable logic controllers
- High-side and low-side current sensing

3 Description

The OPAx991 family (OPA991, OPA2991, and OPA4991) is a family of high voltage (40 V) general purpose operational amplifiers. These devices offer exceptional DC precision and AC performance, including rail-to-rail input/output, low offset (±125 µV, typical), low offset drift (±0.3 µV/°C, typical), low noise (10.5 nV/√Hz and 1.8 μV_{PP}), and 4.5-MHz bandwidth.

Unique features such as differential and common-mode input-voltage range to the supply rail, high output current (±75 mA), high slew rate (21 V/µs), high capacitive load drive (1 nF), and shutdown functionality make the OPAx991 a robust, high-performance operational amplifier for high-voltage industrial applications.

The OPAx991 family of op amps is available in *micro*-size packages (such as X2QFN and WSON), as well as standard packages (such as SOT-23, SOIC, and TSSOP), and is specified from –40°C to 125°C.

Device Information

PART NUMBER (1)	PACKAGE	BODY SIZE (NOM)
OPA991	SOT-23 (5)	2.90 mm × 1.60 mm
	SOT-23 (6)	2.90 mm × 1.60 mm
	SC70 (5)	2.00 mm × 1.25 mm
OPA2991	SOIC (8)	4.90 mm × 3.90 mm
	SOT-23 (8)	2.90 mm × 1.60 mm
	TSSOP (8)	3.00 mm × 4.40 mm
	VSSOP (8)	3.00 mm × 3.00 mm
	WSON (8)	2.00 mm × 2.00 mm
	X2QFN (10)	2.00 mm × 1.50 mm
OPA4991	SOIC (14)	8.65 mm × 3.90 mm
	SOT-23 (14)	4.20 mm × 1.90 mm
	TSSOP (14)	5.00 mm × 4.40 mm
	X2QFN (14)	2.00 mm × 2.00 mm

(1) For all available packages, see the orderable addendum at the end of the data sheet.

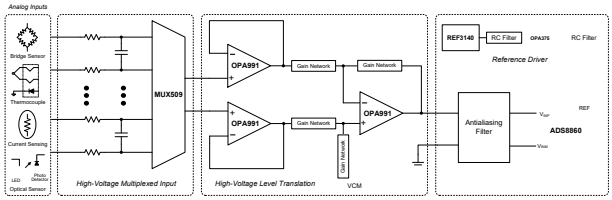

OPAx991 in a High-Voltage, Multiplexed, Data-Acquisition System

An IMPORTANT NOTICE at the end of this data sheet addresses availability, warranty, changes, use in safety-critical applications, intellectual property matters and other important disclaimers. UNLESS OTHERWISE NOTED, this document contains PRODUCTION DATA.

Table of Contents

1 Features....1
2 Applications....1
3 Description....1
4 Revision History....2
5 Pin Configuration and Functions....4
6 Specifications....9
6.1 Absolute Maximum Ratings....9
6.2 ESD Ratings....9
6.3 Recommended Operating Conditions....9
6.4 Thermal Information for Single Channel....9
6.5 Thermal Information for Dual Channel....10
6.6 Thermal Information for Quad Channel....10
6.7 Electrical Characteristics....11
6.8 Typical Characteristics....14
7 Detailed Description....21
7.1 Overview....21
7.2 Functional Block Diagram....21
7.3 Feature Description....22
7.4 Device Functional Modes....31
8 Application and Implementation....32
8.1 Application Information....32
8.2 Typical Applications....32
9 Power Supply Recommendations....34
10 Layout....34
10.1 Layout Guidelines....34
10.2 Layout Example....35
11 Device and Documentation Support....36
11.1 Device Support....36
11.2 Documentation Support....36
11.3 Receiving Notification of Documentation Updates....36
11.4 Support Resources....36
11.5 Trademarks....36
11.6 Electrostatic Discharge Caution....37
11.7 Glossary....37
12 Mechanical, Packaging, and Orderable Information....38

4 Revision History

NOTE: Page numbers for previous revisions may differ from page numbers in the current version.

Changes from Revision E (May 2021) to Revision F (January 2022)	Page
• Added SOT-23-14 (DYY) package in *Device Information*	1
• Removed WQFN (RTE) package from *Device Information*	1
• Removed SOT-553 (DRL) package from *Description*	1
• Added SOT-23-14 (DYY) package in *Pin Configuration and Functions* section	4
• Removed WQFN (RTE) package in *Pin Configuration and Functions* section	4
• Corrected two typos mislabeling the RUC package as a "WQFN" package instead of as a "X2QFN" package in *Pin Configuration and Functions* section	4
• Corrected typo mislabeling the RUC package as having an "Exposed Thermal Pad" in *Pin Configuration and Functions* section	4
• Added X2QFN pinout to Pin Functions: OPA4991 in *Pin Configuration and Functions* section	4
• Updated OPA991S DBV and DRL pinout to correct typo mislabeling "SHDN" pin as the "NC" pin in *Pin Configuration and Functions* section	4
• Removed overbar on "SHDN" pin from OPA2991S DGS and RUG pinouts for added clarity and consistency in the *Pin Configuration and Functions* section	4
• Added SOT-23-14 (DYY) package in *Thermal Information for Quad Channel* section	10
• Removed "OPA4991S" from header of *Thermal Information for Quad Channel* section	10
• Corrected typo mislabeling the RUC package as a "WQFN" package instead of as a "X2QFN" package in *Thermal Information for Quad Channel* section	10
• Removed the overbar from the SHDN pin name in the note on t_{off} and t_{on} in the *Electrical Characteristics* section for consistency	11
• Changed input resistor values in *Equivalent Internal ESD Circuitry Relative to a Typical Circuit Application* in *Electrical Overstress* section to more closely resemble device	27
• Removed WQFN (RTE) package from *Packages With an Exposed Thermal Pad*	30
• Expanded the *Shutdown* section in the *Detailed Description* section to further clarify shutdown operation. Also corrected the current consumption in shutdown from 20µA to 30µA, the valid logic low voltage threshold from "V- + 0.4 V" to "V- + 0.2 V", the valid logic high voltage threshold from "V- + 1.2 V" to "V- + 1.1 V", and the "typical enable time" in the section from 30µs to 8µs to align with the *Electrical Characteristics* section	30

Copyright © 2022 Texas Instruments Incorporated

- Corrected typo for specified operating supply region from "2.7 V to 40 V (±1.35 V to ±40 V)" to "2.7 V to 40 V (±1.35 V to ±20 V)" in *Power Supply Recommendations* section 34

Changes from Revision D (July 2020) to Revision E (May 2021) **Page**

- Deleted preview notation from X2QFN-14 (RUC) package in *Device Information* 1
- Deleted preview notation from VSSOP-8 (DGK) package in *Device Information* 1
- Removed preview notation from X2QFN-14 (RUC) package in *Pin Configuration and Functions* section 4
- Removed preview notation from VSSOP-8 (DGK) in *Pin Configuration and Functions* section 4
- Removed Table of Graphs from the *Specifications* section..... 9

Changes from Revision C (May 2020) to Revision D (July 2020) **Page**

- Updated the numbering format for tables, figures, and cross-references throughout the document..... 1
- Deleted preview notation from SOIC-14 (D) package in *Device Information* 1
- Deleted preview notation from SOT-23-5 (DBV) package in *Device Information* 1
- Deleted preview notation from SOT-23-6 (DBV) package in *Device Information* 1
- Deleted preview notation from SC70 (DCK) package in *Device Information* 1
- Deleted preview notation from SOT-23-8 (DDF) package in *Device Information* 1
- Deleted preview notation from TSSOP-14 (PW) package in *Device Information* 1
- Removed preview notation on SOT-23-5 (DBV), and SC70 (DCK)..... 4
- Clarified SHDN notation in the OPA991S *Pin Configuration and Functions* section 4
- Removed preview notation from SOT-23-6 (DBV) package in *Pin Configuration and Functions* section 4
- Removed preview notation from SOT-23-8 (DDF) package in *Pin Configuration and Functions* section 4
- Clarified SHDN notation in OPA2991S *Pin Configuration and Functions* section 4
- Removed preview notation from SOIC-14 (D) and TSSOP-14 (PW) packages in *Pin Configuration and Functions* section 4
- Clarified SHDN notation in OPA4991S *Pin Configuration and Functions* section 4

Changes from Revision B (May 2020) to Revision C (May 2020) **Page**

- Removed preview notation from TSSOP (PW) package in *Pin Configuration and Functions* section 4
- Removed preview notation from X2QFN (RUG) package in *Pin Configuration and Functions* section 4

Changes from Revision A (December 2019) to Revision B (May 2020) **Page**

- Added OPA991 and OPA4991 devices to the data sheet..... 1
- Deleted preview notation from WSON (DSG) package in *Device Information* 1
- Changed X2QFN (10) dimension in *Device Information* section 1
- Changed formatting of Pin Functions tables to align with data sheet standards..... 4
- Deleted preview notation from WSON (DSG) package in *Pin Configuration and Functions* section 4

Changes from Revision * (October 2019) to Revision A (December 2019) **Page**

- Changed OPA2991 device status from *Advance Information* to *Production Data* 1
- Removed preview notation from SOIC (D) package in *Device Information* 1
- Removed preview notation from SOIC (D) package in *Pin Configuration and Functions* section..... 4
- Added *Typical Characteristics* section in *Specifications* section..... 14
- Added additional references in *Related Documentation* section..... 36

5 Pin Configuration and Functions

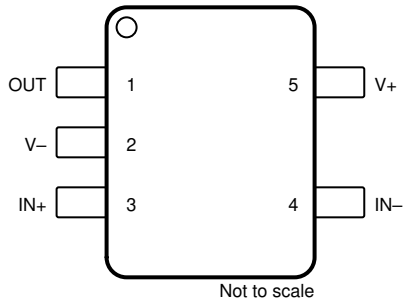

A. DRL package is preview only.

Figure 5-1. OPA991 DBV, T DCK, and DRL Package(A) 5-Pin SOT-23, SC70, and SOT-553 (Top View)

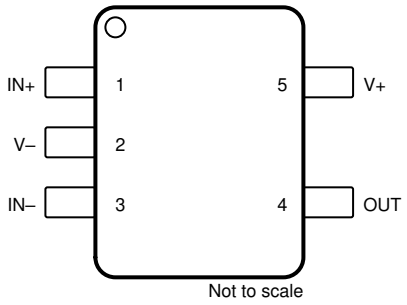

Figure 5-2. OPA991 DCK Package 5-Pin SC70 (Top View)

Table 5-1. Pin Functions: OPA991

PIN			I/O	DESCRIPTION
NAME	DBV, DRL	DCK		
IN+	3	1	I	Noninverting input
IN–	4	3	I	Inverting input
OUT	1	4	O	Output
V+	5	5	—	Positive (highest) power supply
V–	2	2	—	Negative (lowest) power supply

Copyright © 2022 Texas Instruments Incorporated

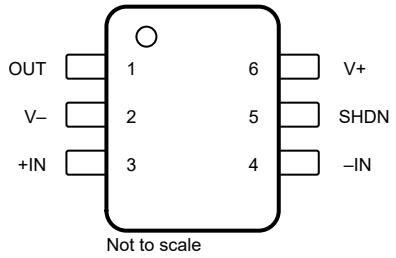

A. DRL package is preview only.

Figure 5-3. OPA991S DBV and DRL Package(A)
6-Pin SOT-23 and SOT-563
(Top View)

Table 5-2. Pin Functions: OPA991S

PIN		I/O	DESCRIPTION
NAME	NO.		
+IN	3	I	Noninverting input
–IN	4	I	Inverting input
OUT	1	O	Output
SHDN	5	I	Shutdown: low = amplifier enabled, high = amplifier disabled. See Section 7.3.11 for more information.
V+	6	—	Positive (highest) power supply
V–	2	—	Negative (lowest) power supply

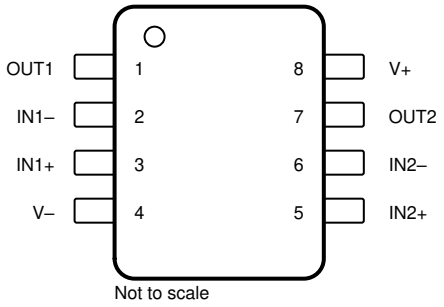

Figure 5-4. OPA2991 D, DDF, DGK, and PW Package 8-Pin SOIC, SOT-23, TSSOP, and VSSOP (Top View)

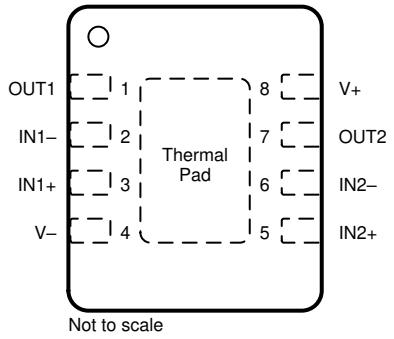

A. Connect thermal pad to V–. See Section 7.3.10 for more information.

Figure 5-5. OPA2991 DSG Package(A) 8-Pin WSON With Exposed Thermal Pad (Top View)

Table 5-3. Pin Functions: OPA2991

PIN		I/O	DESCRIPTION
NAME	NO.		
+IN A	3	I	Noninverting input, channel A
+IN B	5	I	Noninverting input, channel B
–IN A	2	I	Inverting input, channel A
–IN B	6	I	Inverting input, channel B
OUT A	1	O	Output, channel A
OUT B	7	O	Output, channel B
V+	8	—	Positive (highest) power supply
V–	4	—	Negative (lowest) power supply

Copyright © 2022 Texas Instruments Incorporated

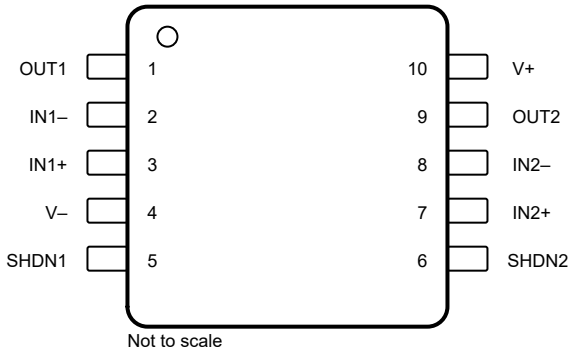

A. Package is preview only.

Figure 5-6. OPA2991S DGS Package(A)
10-Pin VSSOP
(Top View)

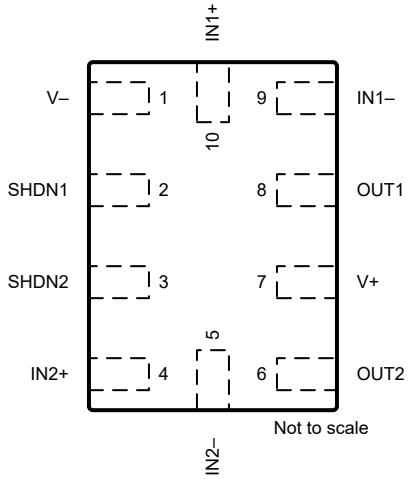

Figure 5-7. OPA2991S RUG Package
10-Pin X2QFN
(Top View)

Table 5-4. Pin Functions: OPA2991S

PIN			I/O	DESCRIPTION
NAME	VSSOP	X2QFN		
+IN A	3	10	I	Noninverting input, channel A
+IN B	7	4	I	Noninverting input, channel B
–IN A	2	9	I	Inverting input, channel A
–IN B	8	5	I	Inverting input, channel B
OUT A	1	8	O	Output, channel A
OUT B	9	6	O	Output, channel B
SHDN1	5	2	I	Shutdown, channel 1: low = amplifier enabled, high = amplifier disabled. See Section 7.3.11 for more information.
SHDN2	6	3	I	Shutdown, channel 2: low = amplifier enabled, high = amplifier disabled. See Section 7.3.11 for more information.
V+	10	7	—	Positive (highest) power supply
V–	4	1	—	Negative (lowest) power supply

Copyright © 2022 Texas Instruments Incorporated

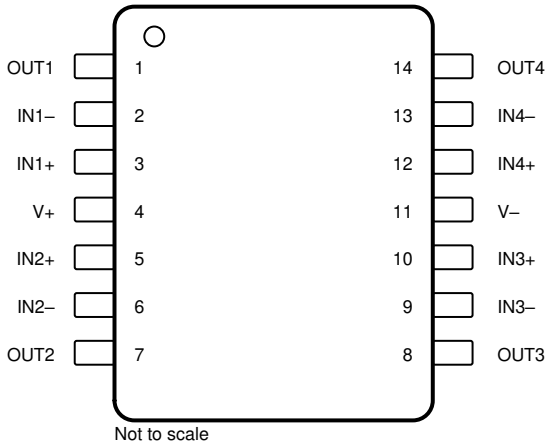

Figure 5-8. OPA4991 D, PW, and DYY Packages 14-Pin SOIC, TSSOP, SOT-23 (Top View)

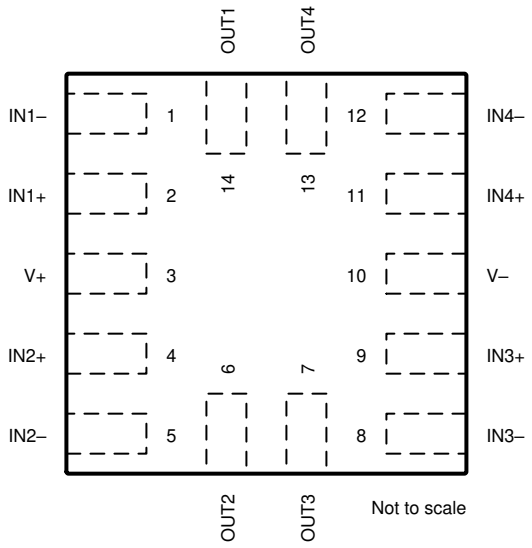

Figure 5-9. OPA4991 RUC Package 14-Pin X2QFN (Top View)

Table 5-5. Pin Functions: OPA4991

PIN			I/O	DESCRIPTION
NAME	SOIC, TSSOP, SOT-23	X2QFN		
IN1+	3	2	I	Noninverting input, channel 1
IN1–	2	1	I	Inverting input, channel 1
IN2+	5	4	I	Noninverting input, channel 2
IN2–	6	5	I	Inverting input, channel 2
IN3+	10	9	I	Noninverting input, channel 3
IN3–	9	8	I	Inverting input, channel 3
IN4+	12	11	I	Noninverting input, channel 4
IN4–	13	12	I	Inverting input, channel 4
NC	—	—	—	Do not connect
OUT1	1	14	O	Output, channel 1
OUT2	7	6	O	Output, channel 2
OUT3	8	7	O	Output, channel 3
OUT4	14	13	O	Output, channel 4
V+	4	3	—	Positive (highest) power supply
V–	11	10	—	Negative (lowest) power supply

Copyright © 2022 Texas Instruments Incorporated

6 Specifications

6.1 Absolute Maximum Ratings

over operating ambient temperature range (unless otherwise noted) [1]

		MIN	MAX	UNIT
Supply voltage, V_S = (V+) – (V–)		0	42	V
Signal input pins	Common-mode voltage [3]	(V–) – 0.5	(V+) + 0.5	V
	Differential voltage [3]		V_S + 0.2	V
	Current [3]	–10	10	mA
Output short-circuit [2]		Continuous		
Operating ambient temperature, T_A		–55	150	°C
Junction temperature, T_J			150	°C
Storage temperature, T_{stg}		–65	150	°C

(1) Operating the device beyond the ratings listed under *Absolute Maximum Ratings* will cause permanent damage to the device. These are stress ratings only, based on process and design limitations, and this device has not been designed to function outside the conditions indicated under *Recommended Operating Conditions*. Exposure to any condition outside *Recommended Operating Conditions* for extended periods, including absolute-maximum-rated conditions, may affect device reliability and performance.
(2) Short-circuit to ground, one amplifier per package. This device has been designed to limit *electrical* damage due to excessive output current, but extended short-circuit current, especially with higher supply voltage, can cause excessive heating and eventual *thermal* destruction. See the *Thermal Protection* section for more information.
(3) Input pins are diode-clamped to the power-supply rails. Input signals that may swing more than 0.5 V beyond the supply rails must be current limited to 10 mA or less.

6.2 ESD Ratings

			VALUE	UNIT
$V_{(ESD)}$	Electrostatic discharge	Human body model (HBM), per ANSI/ESDA/JEDEC JS-001[1]	±2000	V
		Charged device model (CDM), per JEDEC specification JESD22-C101 [2]	±1000	

(1) JEDEC document JEP155 states that 500-V HBM allows safe manufacturing with a standard ESD control process.
(2) JEDEC document JEP157 states that 250-V CDM allows safe manufacturing with a standard ESD control process.

6.3 Recommended Operating Conditions

over operating ambient temperature range (unless otherwise noted)

		MIN	MAX	UNIT
V_S	Supply voltage, (V+) – (V–)	2.7	40	V
V_I	Input voltage range	(V–) – 0.2	(V+) + 0.2	V
V_{IH}	High level input voltage at shutdown pin (amplifier disabled)	(V–) + 1.1	(V–) + 20 V[1]	V
V_{IL}	Low level input voltage at shutdown pin (amplifier enabled)	(V–)	(V–) + 0.2	V
T_A	Specified temperature	–40	125	°C

(1) Cannot exceed V+.

6.4 Thermal Information for Single Channel

THERMAL METRIC [1]		OPA991, OPA991S			UNIT
		DBV (SOT-23)		DCK (SC70)	
		5 PINS	6 PINS	5 PINS	
$R_{\theta JA}$	Junction-to-ambient thermal resistance	185.7	167.8	202.6	°C/W
$R_{\theta JC(top)}$	Junction-to-case (top) thermal resistance	108.2	107.9	101.5	°C/W
$R_{\theta JB}$	Junction-to-board thermal resistance	54.5	49.7	47.8	°C/W
ψ_{JT}	Junction-to-top characterization parameter	31.2	33.9	18.8	°C/W
ψ_{JB}	Junction-to-board characterization parameter	54.2	49.5	47.4	°C/W

Copyright © 2022 Texas Instruments Incorporated

6.4 Thermal Information for Single Channel (continued)

THERMAL METRIC [1]		OPA991, OPA991S			UNIT
		DBV (SOT-23)		DCK (SC70)	
		5 PINS	6 PINS	5 PINS	
$R_{\theta JC(bot)}$	Junction-to-case (bottom) thermal resistance	N/A	N/A	N/A	°C/W

(1) For more information about traditional and new thermal metrics, see the *Semiconductor and IC Package Thermal Metrics* application report, SPRA953.

6.5 Thermal Information for Dual Channel

THERMAL METRIC [1]		OPA2991, OPA2991S						UNIT
		D (SOIC)	DDF (SOT-23)	DGK (VSSOP)	DSG (WSON)	PW (TSSOP)	RUG (X2QFN)	
		8 PINS	8 PINS	8 PINS	8 PINS	8 PINS	10 PINS	
$R_{\theta JA}$	Junction-to-ambient thermal resistance	130.7	143.5	176.5	77.6	185.1	142.3	°C/W
$R_{\theta JC(top)}$	Junction-to-case (top) thermal resistance	72.8	79.9	68.1	93.7	74.0	53.5	°C/W
$R_{\theta JB}$	Junction-to-board thermal resistance	74.0	61.6	98.2	43.9	115.7	68.5	°C/W
ψ_{JT}	Junction-to-top characterization parameter	24.0	5.7	12.0	4.4	12.3	1.0	°C/W
ψ_{JB}	Junction-to-board characterization parameter	73.3	61.3	96.7	43.9	114.0	68.4	°C/W
$R_{\theta JC(bot)}$	Junction-to-case (bottom) thermal resistance	N/A	N/A	N/A	19.0	N/A	N/A	°C/W

(1) For more information about traditional and new thermal metrics, see the *Semiconductor and IC Package Thermal Metrics* application report, SPRA953.

6.6 Thermal Information for Quad Channel

THERMAL METRIC [1]		OPA4991				UNIT
		D (SOIC)	DYY (SOT-23)	PW (TSSOP)	RUC (X2QFN)	
		14 PINS	14 PINS	14 PINS	14 PINS	
$R_{\theta JA}$	Junction-to-ambient thermal resistance	101.4	110.6	131.4	125.9	°C/W
$R_{\theta JC(top)}$	Junction-to-case (top) thermal resistance	57.6	53.7	51.8	39.8	°C/W
$R_{\theta JB}$	Junction-to-board thermal resistance	57.3	35.3	75.8	68.0	°C/W
ψ_{JT}	Junction-to-top characterization parameter	18.5	2.2	7.9	0.8	°C/W
ψ_{JB}	Junction-to-board characterization parameter	56.9	35.0	74.8	67.8	°C/W
$R_{\theta JC(bot)}$	Junction-to-case (bottom) thermal resistance	N/A	N/A	N/A	N/A	°C/W

(1) For more information about traditional and new thermal metrics, see the *Semiconductor and IC Package Thermal Metrics* application report, SPRA953.

Copyright © 2022 Texas Instruments Incorporated

6.7 Electrical Characteristics

For V_S = (V+) – (V–) = 2.7 V to 40 V (±1.35 V to ±20 V) at T_A = 25°C, R_L = 10 kΩ connected to V_S / 2, V_{CM} = V_S / 2, and V_{OUT} = V_S / 2, unless otherwise noted.

PARAMETER		TEST CONDITIONS		MIN	TYP	MAX	UNIT
OFFSET VOLTAGE							
V_{OS}	Input offset voltage	OPA991, OPA2991 V_{CM} = V–			±125	±750	µV
			T_A = –40°C to 125°C			±780	
		OPA4991 V_{CM} = V–			±125	±830	
			T_A = –40°C to 125°C			±850	
dV_{OS}/dT	Input offset voltage drift		T_A = –40°C to 125°C		±0.3		µV/°C
PSRR	Input offset voltage versus power supply	V_{CM} = V–, V_S = 4 V to 40 V	T_A = –40°C to 125°C		±0.3	±1	µV/V
		V_{CM} = V–, V_S = 2.7 V to 40 V[2]			±1	±5	
	Channel separation	f = 0 Hz			5		µV/V
INPUT BIAS CURRENT							
I_B	Input bias current				±10		pA
I_{OS}	Input offset current				±10		pA
NOISE							
E_N	Input voltage noise	f = 0.1 Hz to 10 Hz			1.8		$µV_{PP}$
					0.3		$µV_{RMS}$
e_N	Input voltage noise density	f = 1 kHz			10.8		nV/√Hz
		f = 10 kHz			9.4		
i_N	Input current noise	f = 1 kHz			2		fA/√Hz
INPUT VOLTAGE RANGE							
V_{CM}	Common-mode voltage range			(V–) – 0.1		(V+) + 0.1	V
CMRR	Common-mode rejection ratio	V_S = 40 V, (V–) – 0.1 V < V_{CM} < (V+) – 2 V (Main input pair)	T_A = –40°C to 125°C	109	130		dB
		V_S = 4 V, (V–) – 0.1 V < V_{CM} < (V+) – 2 V (Main input pair)		84	100		
		V_S = 2.7 V, (V–) – 0.1 V < V_{CM} < (V+) – 2 V (Main input pair)[2]		75	95		
		V_S = 2.7 V to 40 V, (V+) – 1 V < V_{CM} < (V+) + 0.1 V (Aux input pair)			85		
INPUT CAPACITANCE							
Z_{ID}	Differential				540 || 9		GΩ || pF
Z_{ICM}	Common-mode				6 || 1		TΩ || pF

6.7 Electrical Characteristics (continued)

For V_S = (V+) – (V–) = 2.7 V to 40 V (±1.35 V to ±20 V) at T_A = 25°C, R_L = 10 kΩ connected to V_S / 2, V_{CM} = V_S / 2, and V_{OUT} = V_S / 2, unless otherwise noted.

PARAMETER		TEST CONDITIONS		MIN	TYP	MAX	UNIT
OPEN-LOOP GAIN							
A_{OL}	Open-loop voltage gain	V_S = 40 V, V_{CM} = V– (V–) + 0.1 V < V_O < (V+) – 0.1 V		120	145		dB
			T_A = –40°C to 125°C		142		
		V_S = 4 V, V_{CM} = V– (V–) + 0.1 V < V_O < (V+) – 0.1 V		104	130		
			T_A = –40°C to 125°C		125		
		V_S = 2.7 V, V_{CM} = V– (V–) + 0.1 V < V_O < (V+) – 0.1 V[2]		101	120		
			T_A = –40°C to 125°C		118		
FREQUENCY RESPONSE							
GBW	Gain-bandwidth product				4.5		MHz
SR	Slew rate	V_S = 40 V, G = +1, C_L = 20 pF			21		V/µs
t_S	Settling time	To 0.01%, V_S = 40 V, V_{STEP} = 10 V , G = +1, CL = 20 pF			2.5		µs
		To 0.01%, V_S = 40 V, V_{STEP} = 2 V , G = +1, CL = 20 pF			1.5		
		To 0.1%, V_S = 40 V, V_{STEP} = 10 V , G = +1, CL = 20 pF			2		
		To 0.1%, V_S = 40 V, V_{STEP} = 2 V , G = +1, CL = 20 pF			1		
	Phase margin	G = +1, R_L = 10 kΩ			60		°
	Overload recovery time	V_{IN} × gain > V_S			400		ns
THD+N	Total harmonic distortion + noise	V_S = 40 V, V_O = 3 V_{RMS}, G = 1, f = 1 kHz			0.00021%		
OUTPUT							
	Voltage output swing from rail	Positive and negative rail headroom	V_S = 40 V, R_L = no load[2]		5	10	mV
			V_S = 40 V, R_L = 10 kΩ		50	55	
			V_S = 40 V, R_L = 2 kΩ		200	250	
			V_S = 2.7 V, R_L = no load[2]		1	6	
			V_S = 2.7 V, R_L = 10 kΩ		5	12	
			V_S = 2.7 V, R_L = 2 kΩ		25	40	
I_{SC}	Short-circuit current				±75		mA
C_{LOAD}	Capacitive load drive				1000		pF
Z_O	Open-loop output impedance	f = 1 MHz, I_O = 0 A			525		Ω

Copyright © 2022 Texas Instruments Incorporated

6.7 Electrical Characteristics (continued)

For V_S = (V+) – (V–) = 2.7 V to 40 V (±1.35 V to ±20 V) at T_A = 25°C, R_L = 10 kΩ connected to V_S / 2, V_{CM} = V_S / 2, and V_{OUT} = V_S / 2, unless otherwise noted.

PARAMETER		TEST CONDITIONS		MIN	TYP	MAX	UNIT
POWER SUPPLY							
I_Q	Quiescent current per amplifier	V_{CM} = V–, I_O = 0 A			560	685	µA
			T_A = –40°C to 125°C			750	
SHUTDOWN							
I_{QSD}	Quiescent current per amplifier	V_S = 2.7 V to 40 V, all amplifiers disabled, SHDN = V– + 2 V			30	45	µA
Z_{SHDN}	Output impedance during shutdown	V_S = 2.7 V to 40 V, amplifier disabled, SHDN = V– + 2 V			320 || 2		MΩ || pF
V_{IH}	Logic high threshold voltage (amplifier disabled)	For valid input high, the SHDN pin voltage should be greater than the maximum threshold but less than or equal to (V–) + 20 V			(V–) + 0.8	(V–) + 1.1	V
V_{IL}	Logic low threshold voltage (amplifier enabled)	For valid input low, the SHDN pin voltage should be less than the minimum threshold but greater than or equal to V–		(V–) + 0.2	(V–) + 0.8		V
t_{ON}	Amplifier enable time (1)	G = +1, V_{CM} = V-, V_O = 0.1 × V_S/2			8		µs
t_{OFF}	Amplifier disable time (1)	V_{CM} = V-, V_O = V_S/2			3		µs
	SHDN pin input bias current (per pin)	V_S = 2.7 V to 40 V, (V–) + 20 V ≥ SHDN ≥ (V–) + 0.9 V			500		nA
		V_S = 2.7 V to 40 V, (V–) ≤ SHDN ≤ (V–) + 0.7 V			150		

(1) Disable time (t_{OFF}) and enable time (t_{ON}) are defined as the time interval between the 50% point of the signal applied to the SHDN pin and the point at which the output voltage reaches the 10% (disable) or 90% (enable) level.
(2) Specified by characterization only.

6.8 Typical Characteristics

at T_A = 25°C, V_S = ±20 V, V_{CM} = V_S / 2, R_{LOAD} = 10 kΩ connected to V_S / 2, and C_L = 10 pF (unless otherwise noted)

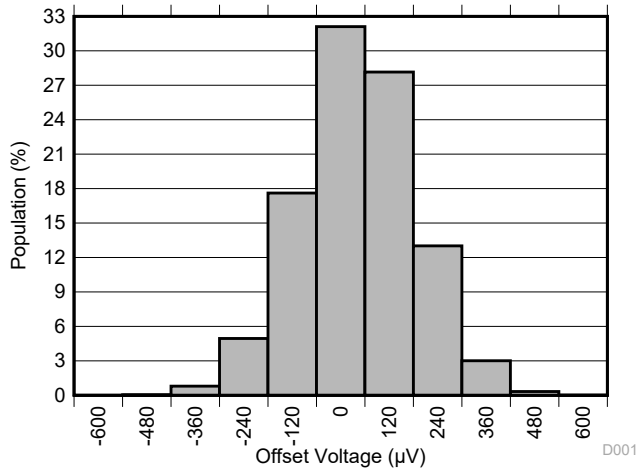

Distribution from 15462 amplifiers, T_A = 25°C

Figure 6-1. Offset Voltage Production Distribution

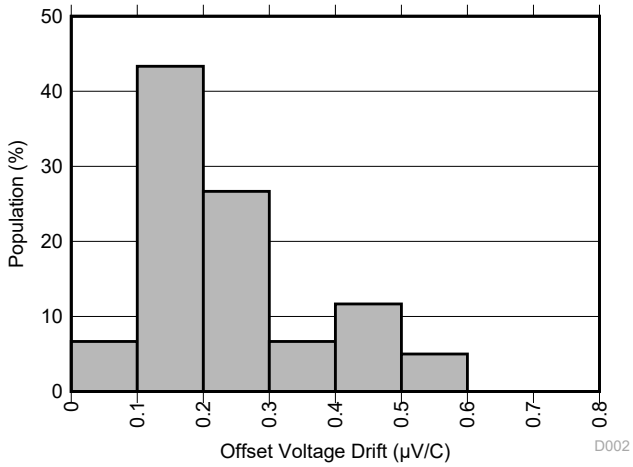

Distribution from 60 amplifiers

Figure 6-2. Offset Voltage Drift Distribution

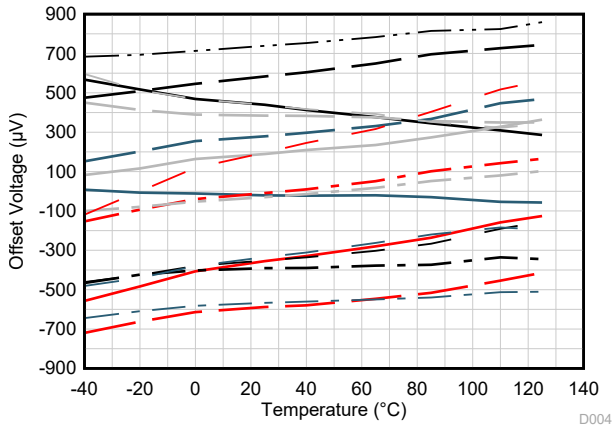

V_{CM} = V+

Figure 6-3. Offset Voltage vs Temperature

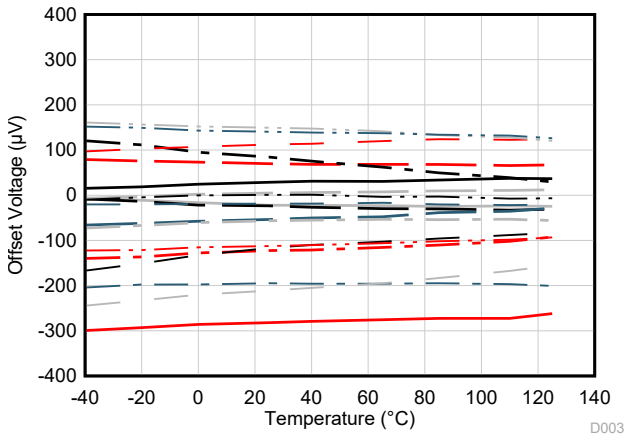

V_{CM} = V–

Figure 6-4. Offset Voltage vs Temperature

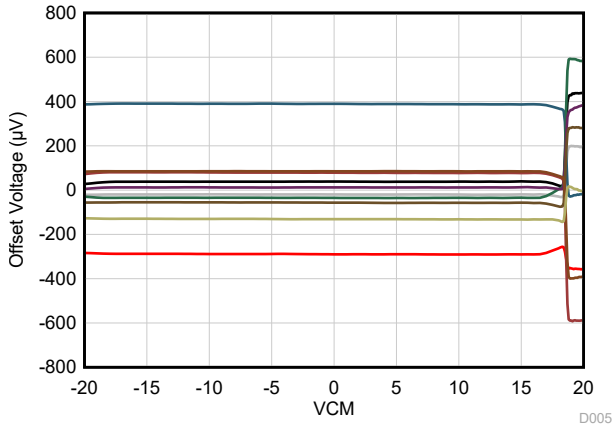

T_A = 25°C

Figure 6-5. Offset Voltage vs Common-Mode Voltage

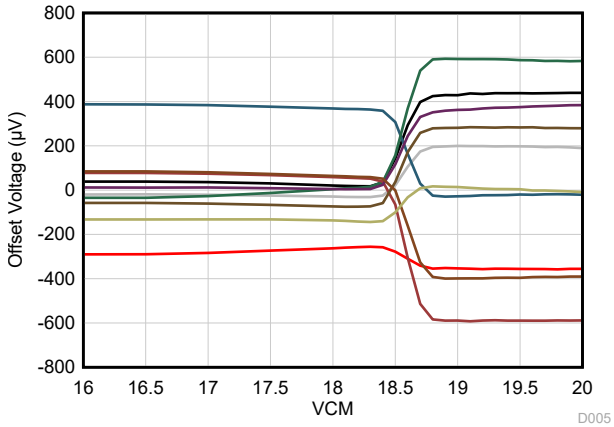

T_A = 25°C

Figure 6-6. Offset Voltage vs Common-Mode Voltage (Transition Region)

Copyright © 2022 Texas Instruments Incorporated

6.8 Typical Characteristics (continued)

at T_A = 25°C, V_S = ±20 V, V_{CM} = V_S / 2, R_{LOAD} = 10 kΩ connected to V_S / 2, and C_L = 10 pF (unless otherwise noted)

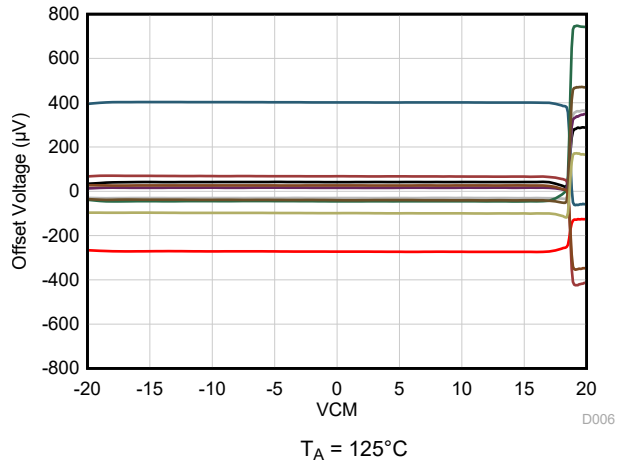

Figure 6-7. Offset Voltage vs Common-Mode Voltage

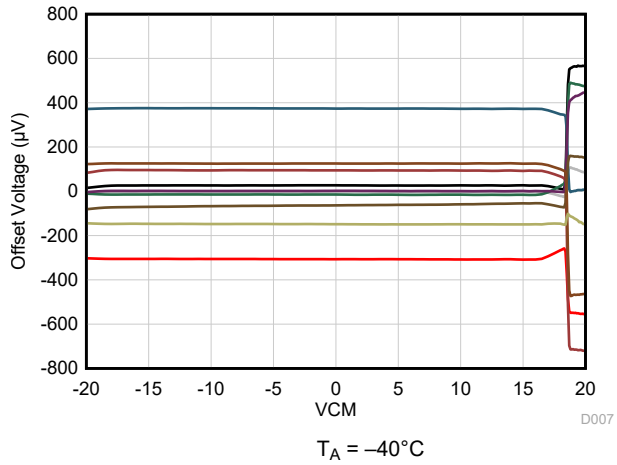

Figure 6-8. Offset Voltage vs Common-Mode Voltage

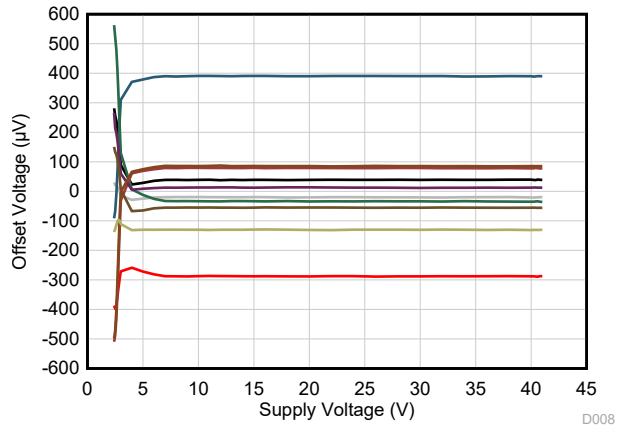

Figure 6-9. Offset Voltage vs Power Supply

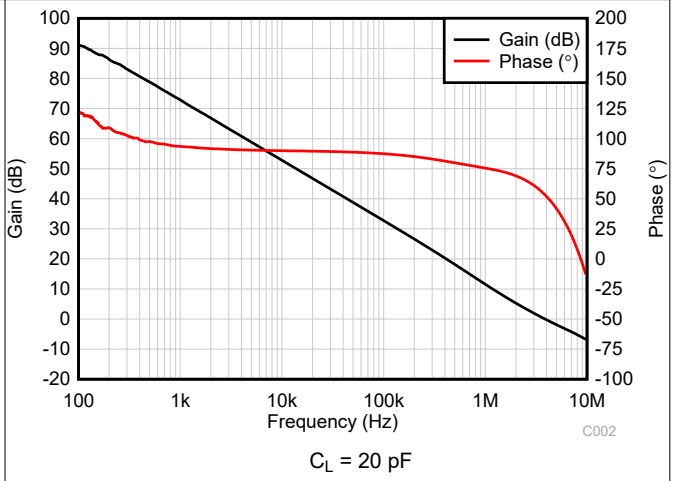

Figure 6-10. Open-Loop Gain and Phase vs Frequency

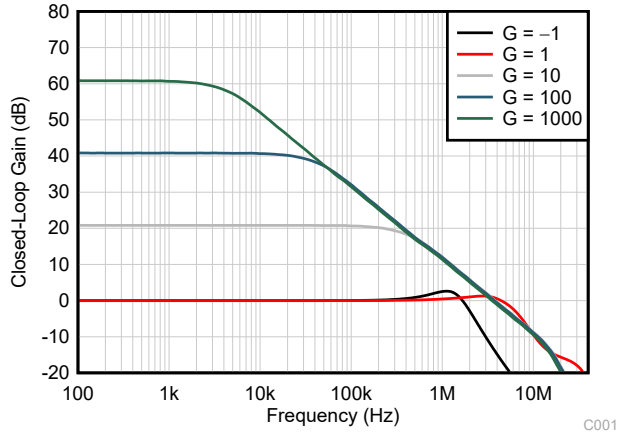

Figure 6-11. Closed-Loop Gain vs Frequency

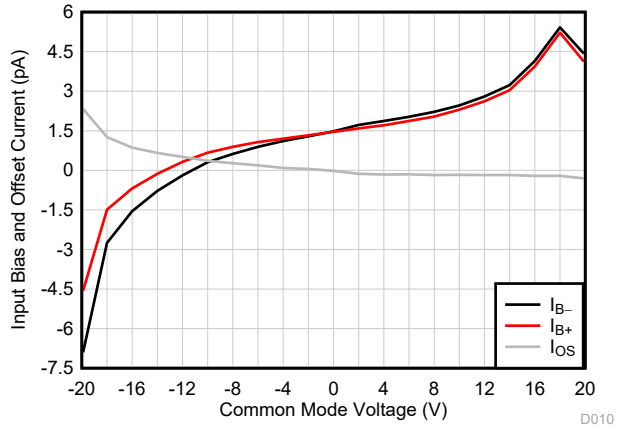

Figure 6-12. Input Bias Current vs Common-Mode Voltage

6.8 Typical Characteristics (continued)

at T_A = 25°C, V_S = ±20 V, V_{CM} = V_S / 2, R_{LOAD} = 10 kΩ connected to V_S / 2, and C_L = 10 pF (unless otherwise noted)

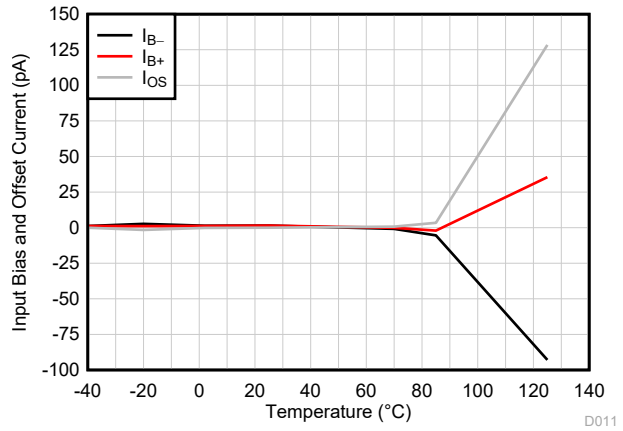

Figure 6-13. Input Bias Current vs Temperature

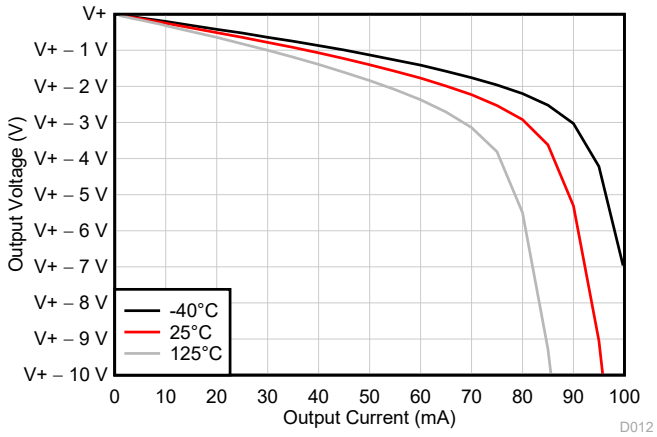

Figure 6-14. Output Voltage Swing vs Output Current (Sourcing)

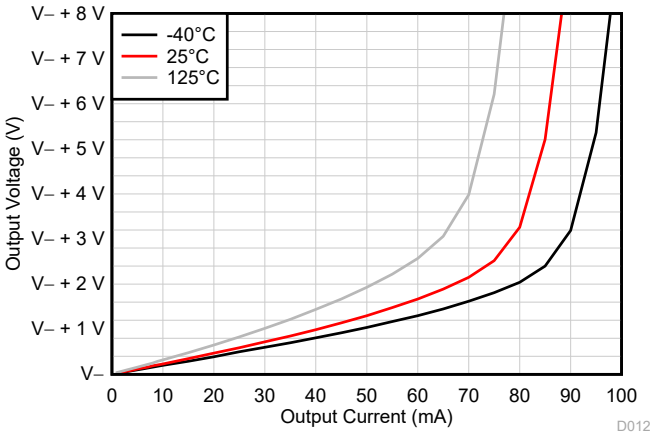

Figure 6-15. Output Voltage Swing vs Output Current (Sinking)

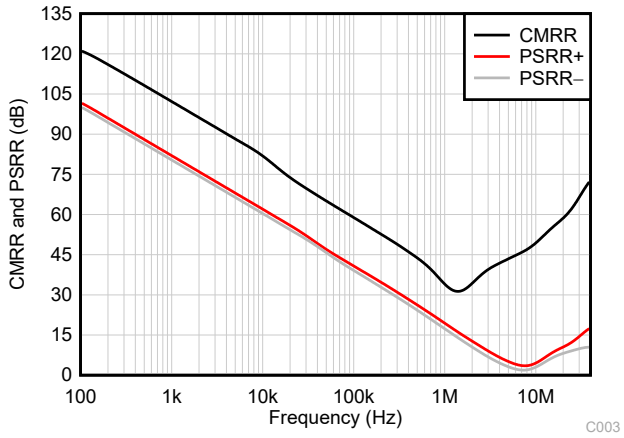

Figure 6-16. CMRR and PSRR vs Frequency

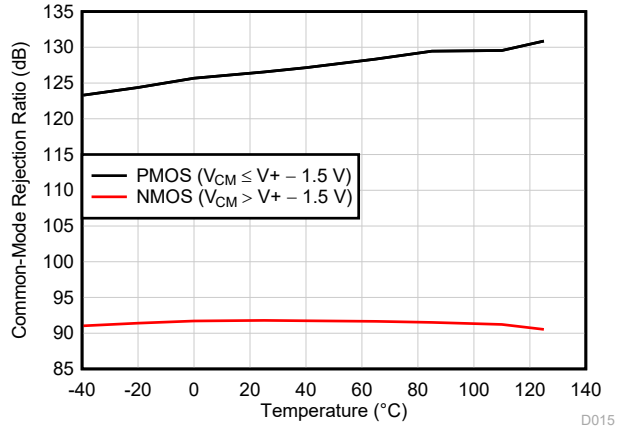

f = 0 Hz

Figure 6-17. CMRR vs Temperature (dB)

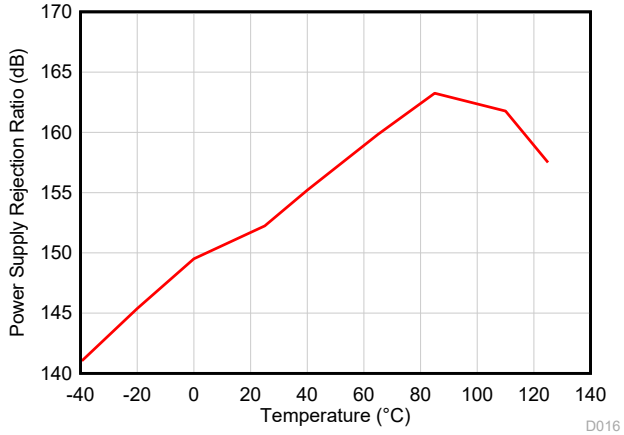

f = 0 Hz

Figure 6-18. PSRR vs Temperature (dB)

Copyright © 2022 Texas Instruments Incorporated

6.8 Typical Characteristics (continued)

at T_A = 25°C, V_S = ±20 V, V_{CM} = V_S / 2, R_{LOAD} = 10 kΩ connected to V_S / 2, and C_L = 10 pF (unless otherwise noted)

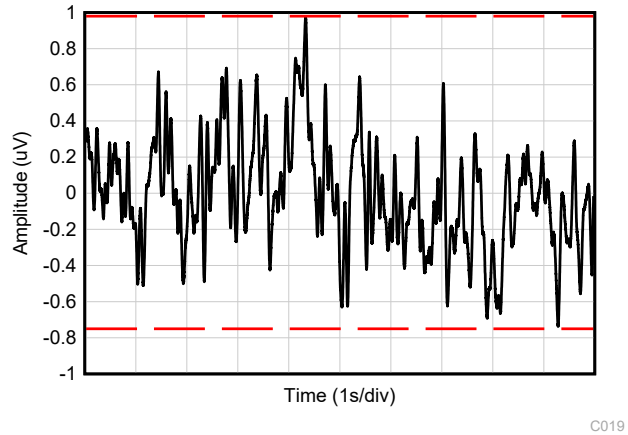

Figure 6-19. 0.1-Hz to 10-Hz Noise

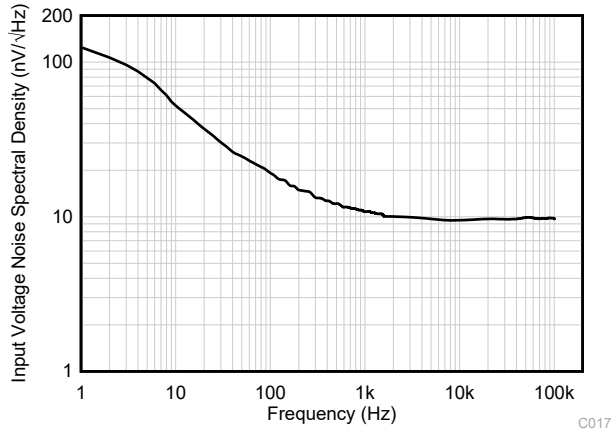

Figure 6-20. Input Voltage Noise Spectral Density vs Frequency

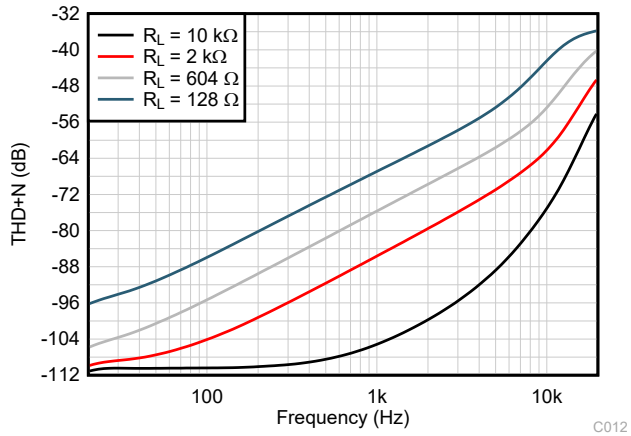

BW = 80 kHz, V_{OUT} = 1 V_{RMS}

Figure 6-21. THD+N Ratio vs Frequency

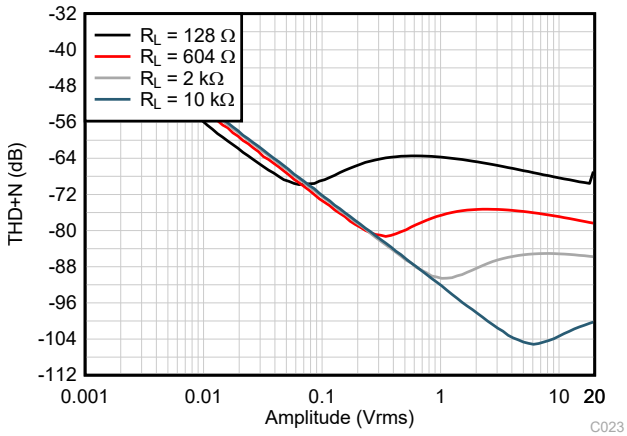

BW = 80 kHz, f = 1 kHz

Figure 6-22. THD+N vs Output Amplitude

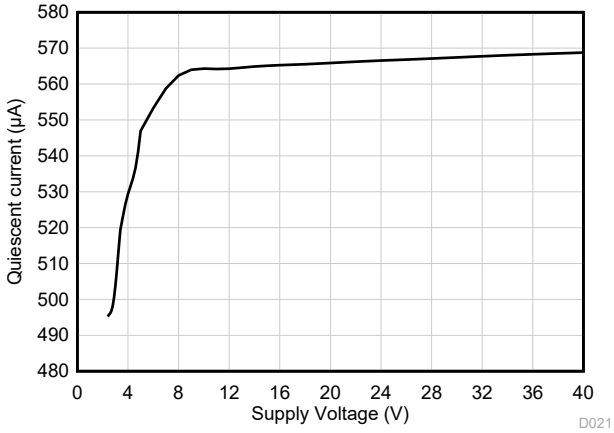

V_{CM} = V–

Figure 6-23. Quiescent Current vs Supply Voltage

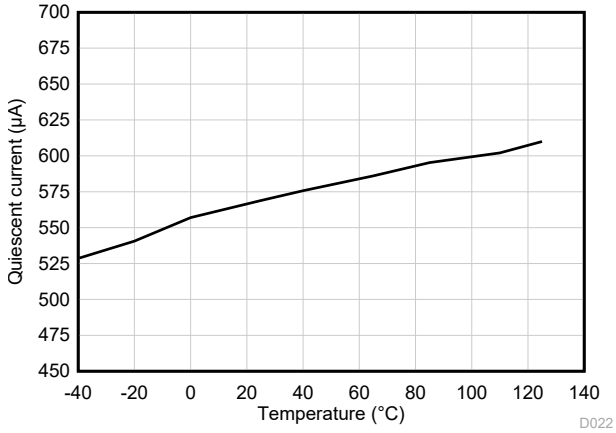

Figure 6-24. Quiescent Current vs Temperature

6.8 Typical Characteristics (continued)

at T_A = 25°C, V_S = ±20 V, V_{CM} = V_S / 2, R_{LOAD} = 10 kΩ connected to V_S / 2, and C_L = 10 pF (unless otherwise noted)

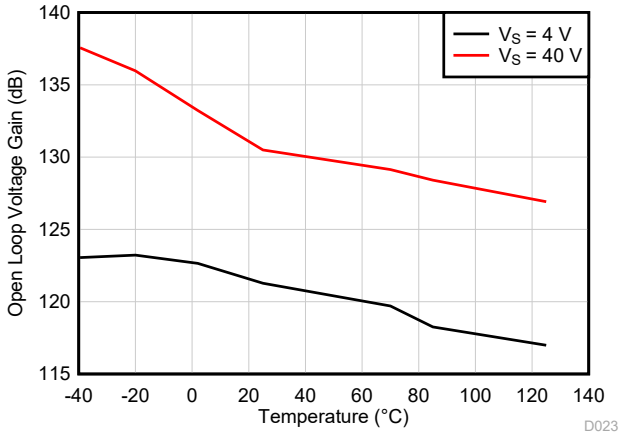

Figure 6-25. Open-Loop Voltage Gain vs Temperature (dB)

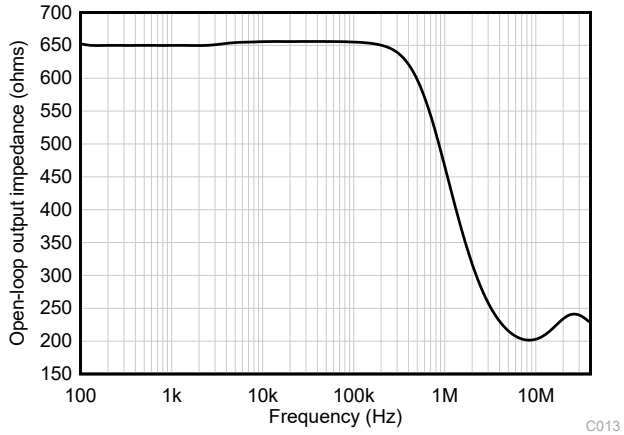

Figure 6-26. Open-Loop Output Impedance vs Frequency

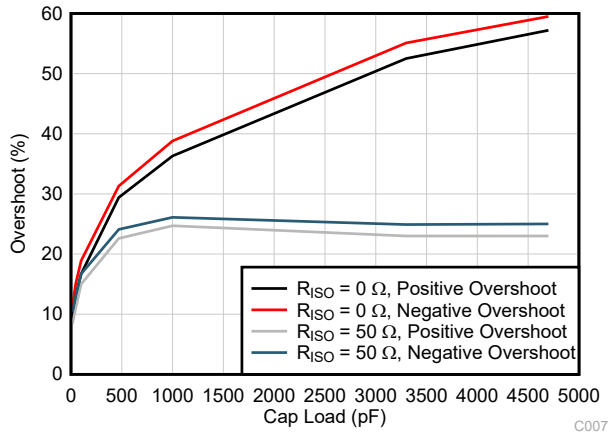

G = –1, 10-mV output step

Figure 6-27. Small-Signal Overshoot vs Capacitive Load

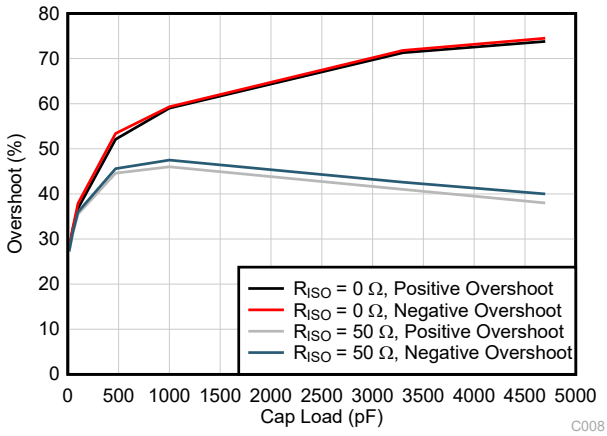

G = 1, 10-mV output step

Figure 6-28. Small-Signal Overshoot vs Capacitive Load

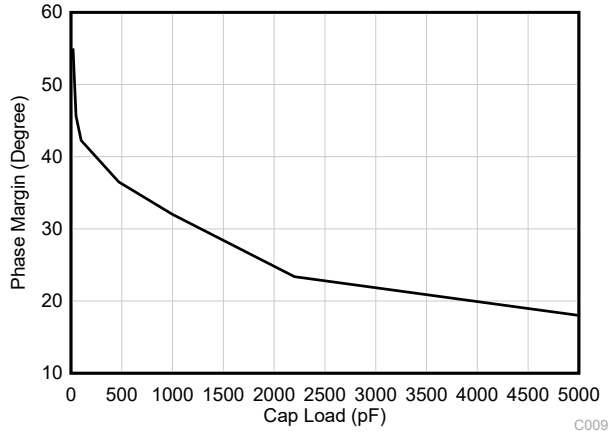

Figure 6-29. Phase Margin vs Capacitive Load

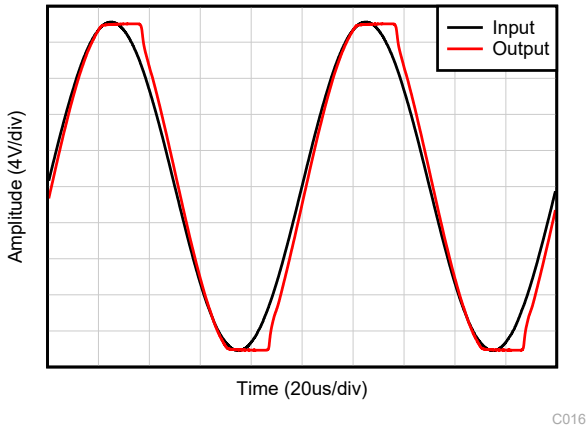

V_{IN} = ±20 V; V_S = V_{OUT} = ±17 V

Figure 6-30. No Phase Reversal

Copyright © 2022 Texas Instruments Incorporated

6.8 Typical Characteristics (continued)

at T_A = 25°C, V_S = ±20 V, V_{CM} = V_S / 2, R_{LOAD} = 10 kΩ connected to V_S / 2, and C_L = 10 pF (unless otherwise noted)

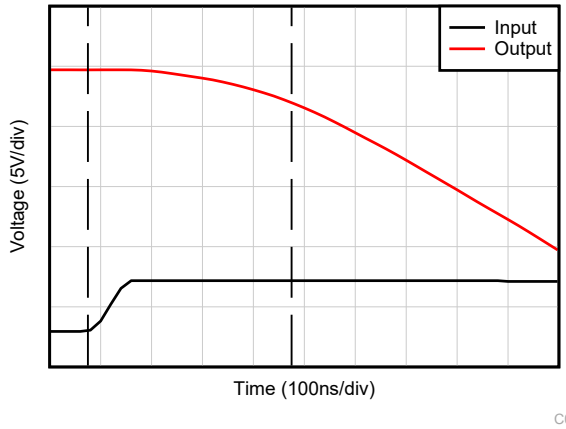

G = –10

Figure 6-31. Positive Overload Recovery

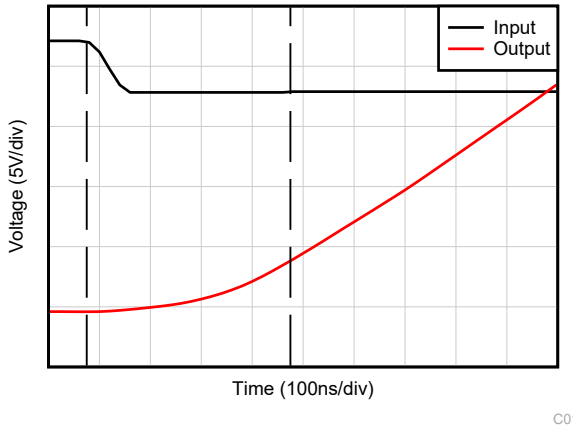

G = –10

Figure 6-32. Negative Overload Recovery

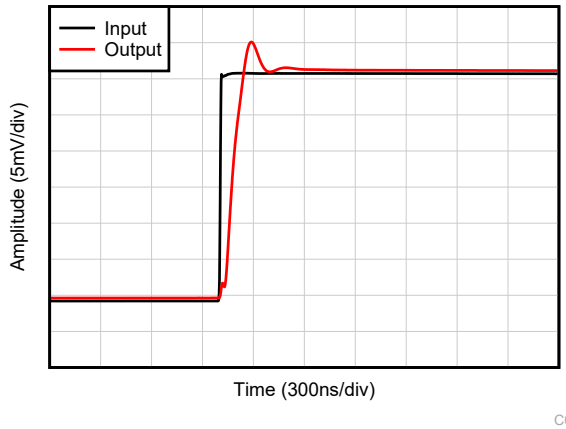

C_L = 20 pF, G = 1, 20-mV step response

Figure 6-33. Small-Signal Step Response, Rising

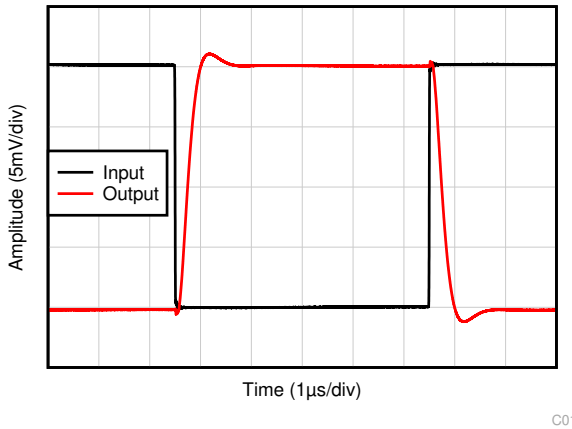

C_L = 20 pF, G = 1, 20-mV step response

Figure 6-34. Small-Signal Step Response, Falling

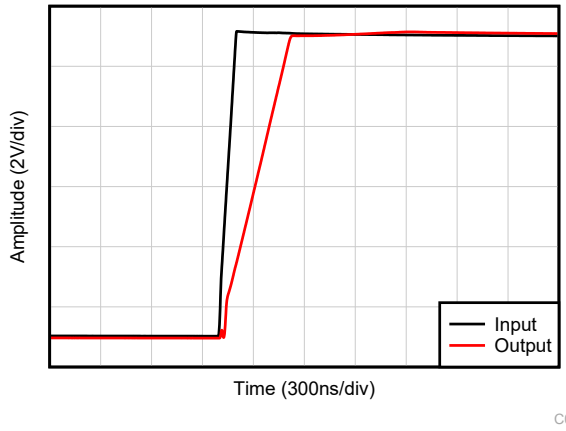

C_L = 20 pF, G = 1

Figure 6-35. Large-Signal Step Response (Rising)

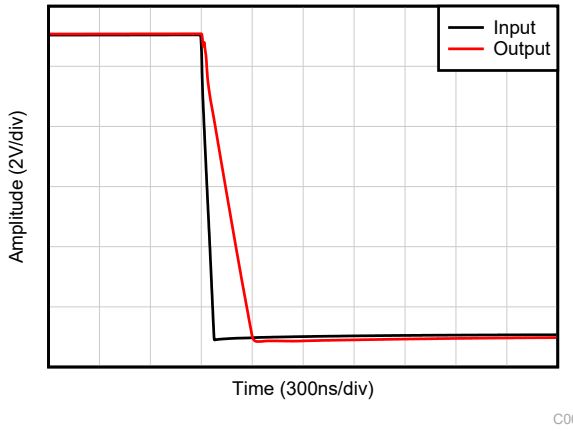

C_L = 20 pF, G = 1

Figure 6-36. Large-Signal Step Response (Falling)

6.8 Typical Characteristics (continued)

at T_A = 25°C, V_S = ±20 V, V_{CM} = V_S / 2, R_{LOAD} = 10 kΩ connected to V_S / 2, and C_L = 10 pF (unless otherwise noted)

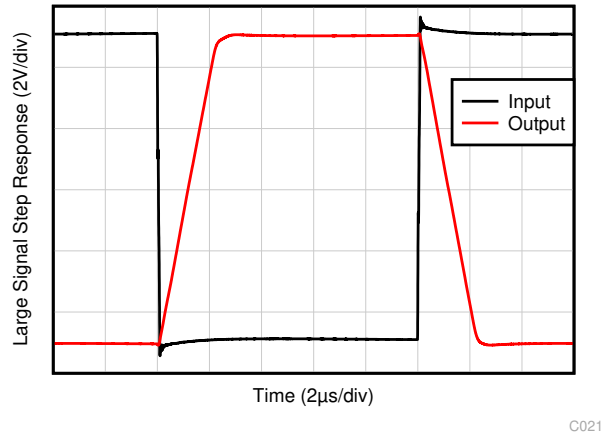

C_L = 20 pF, G = –1

Figure 6-37. Large-Signal Step Response

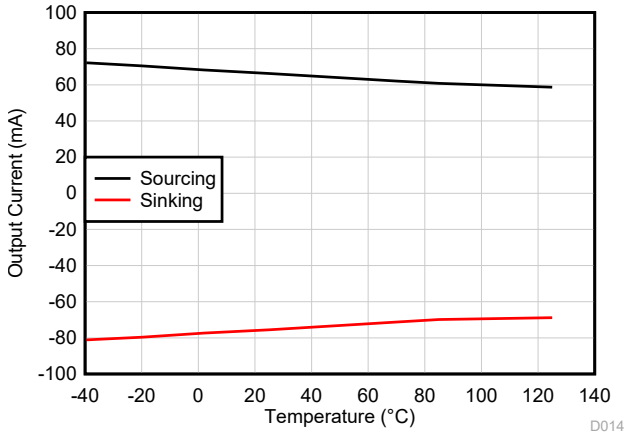

Figure 6-38. Short-Circuit Current vs Temperature

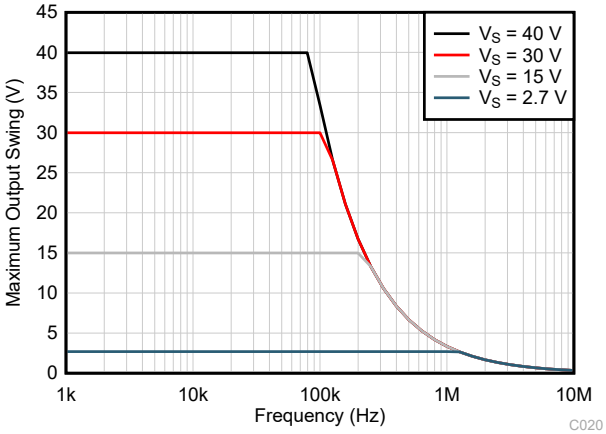

Figure 6-39. Maximum Output Voltage vs Frequency

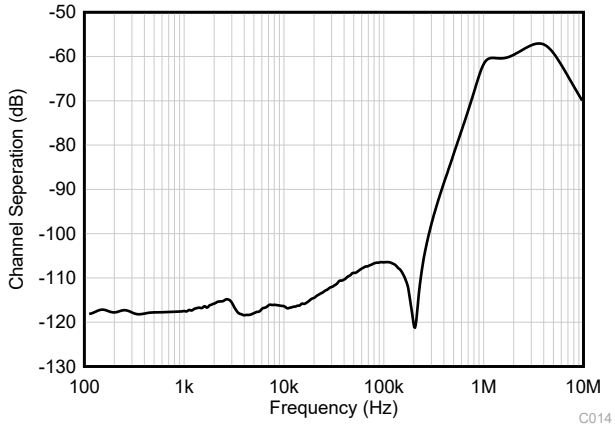

Figure 6-40. Channel Separation vs Frequency

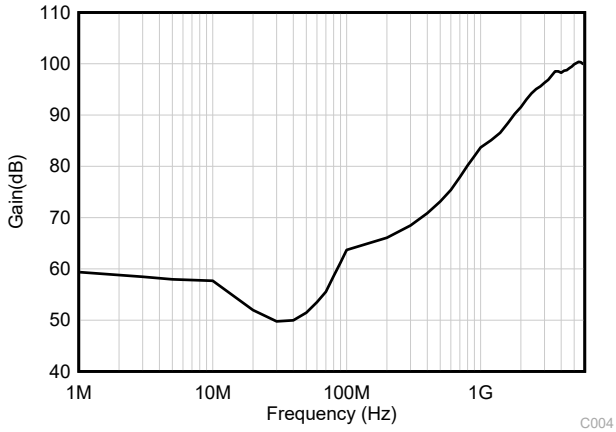

Figure 6-41. EMIRR (Electromagnetic Interference Rejection Ratio) vs Frequency

Copyright © 2022 Texas Instruments Incorporated

7 Detailed Description

7.1 Overview

The OPAx991 family (OPA991, OPA2991, and OPA4991) is a new generation of 40-V general purpose operational amplifiers.

These devices offer excellent DC precision and AC performance, including rail-to-rail input/output, low offset (±125 µV, typ), low offset drift (±0.3 µV/°C, typ), and 4.5-MHz bandwidth.

Unique features such as differential and common-mode input-voltage range to the supply rail, high output current (±75 mA), high slew rate (21 V/µs), and shutdown functionality make the OPAx991 a robust, high-performance operational amplifier for high-voltage industrial applications.

7.2 Functional Block Diagram

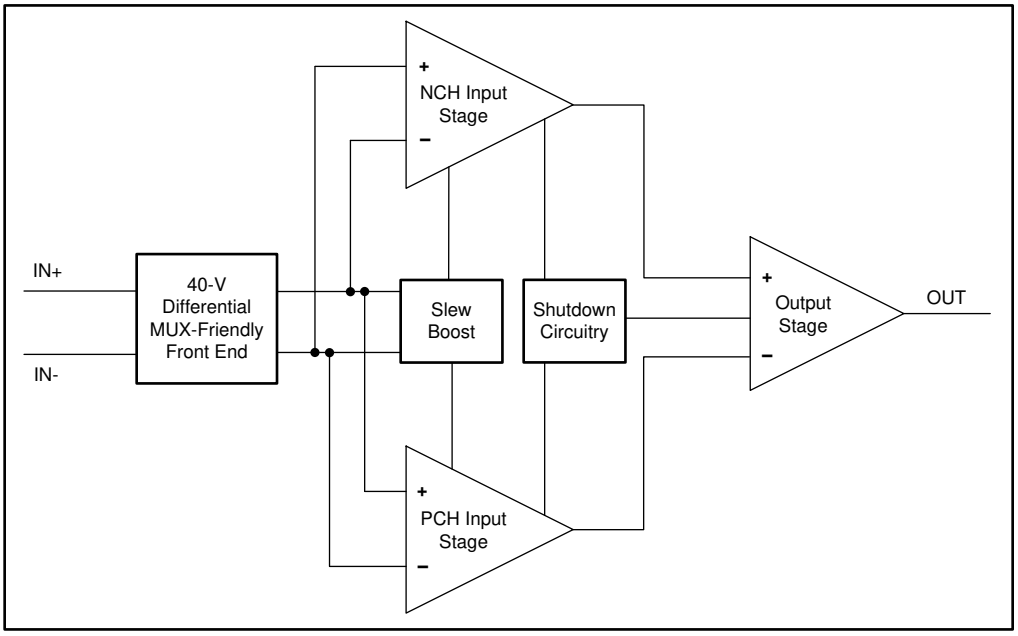

7.3 Feature Description

7.3.1 Input Protection Circuitry

The OPAx991 uses a unique input architecture to eliminate the requirement for input protection diodes but still provides robust input protection under transient conditions. Figure 7-1 shows conventional input diode protection schemes that are activated by fast transient step responses and introduce signal distortion and settling time delays because of alternate current paths, as shown in Figure 7-2. For low-gain circuits, these fast-ramping input signals forward-bias back-to-back diodes, causing an increase in input current and resulting in extended settling time.

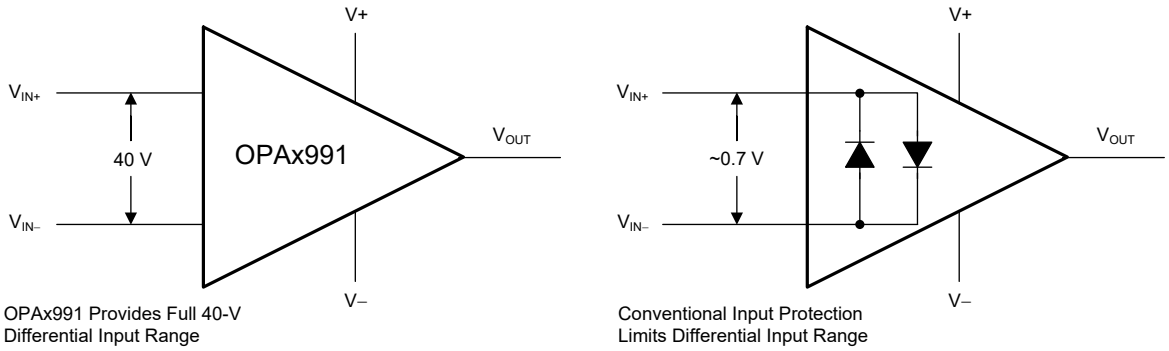

Figure 7-1. OPAx991 Input Protection Does Not Limit Differential Input Capability

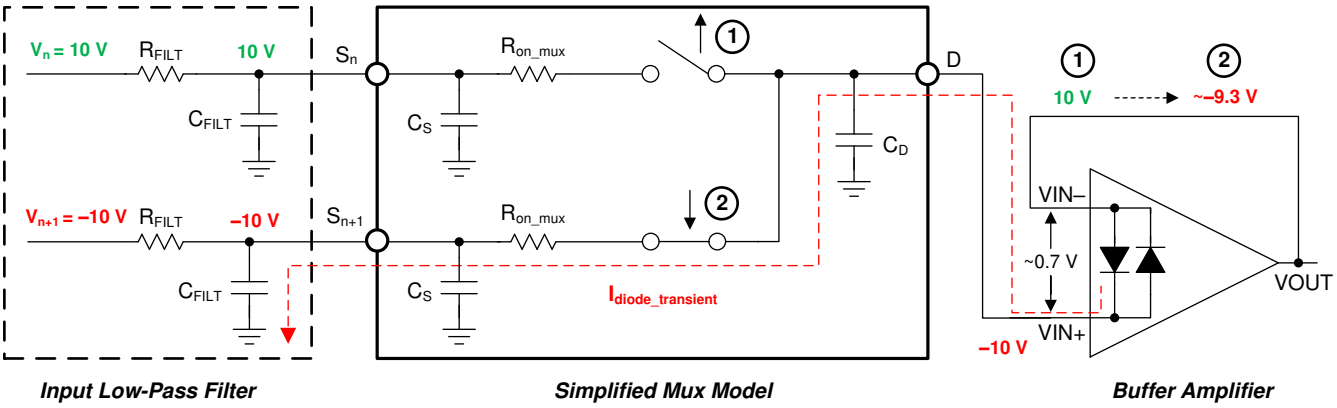

Figure 7-2. Back-to-Back Diodes Create Settling Issues

The OPAx991 family of operational amplifiers provides a true high-impedance differential input capability for high-voltage applications using a patented input protection architecture that does not introduce additional signal distortion or delayed settling time, making the device an optimal op amp for multichannel, high-switched, input applications. The OPA991 tolerates a maximum differential swing (voltage between inverting and non-inverting pins of the op amp) of up to 40 V, making the device suitable for use as a comparator or in applications with fast-ramping input signals such as data-acquisition systems; see the TI TechNote *MUX-Friendly Precision Operational Amplifiers* for more information.

7.3.2 EMI Rejection

The OPAx991 uses integrated electromagnetic interference (EMI) filtering to reduce the effects of EMI from sources such as wireless communications and densely-populated boards with a mix of analog signal chain and digital components. EMI immunity can be improved with circuit design techniques; the OPAx991 benefits from these design improvements. Texas Instruments has developed the ability to accurately measure and quantify the immunity of an operational amplifier over a broad frequency spectrum extending from 10 MHz to 6 GHz. Figure 7-3 shows the results of this testing on the OPAx991. Table 7-1 shows the EMIRR IN+ values for the OPAx991 at particular frequencies commonly encountered in real-world applications. The *EMI Rejection Ratio of Operational*

Copyright © 2022 Texas Instruments Incorporated

Amplifiers application report contains detailed information on the topic of EMIRR performance as it relates to op amps and is available for download from www.ti.com.

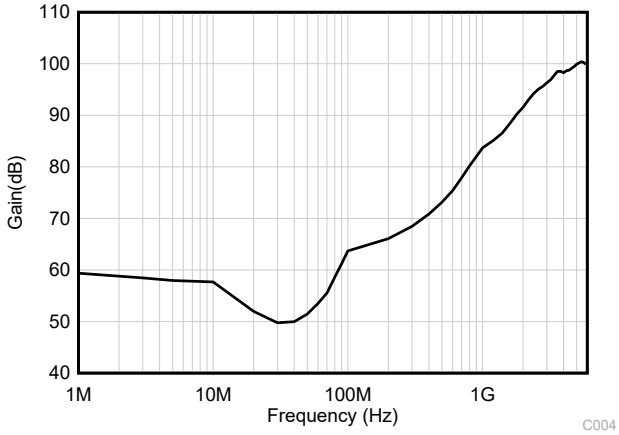

Figure 7-3. EMIRR Testing

Table 7-1. OPA991 EMIRR IN+ for Frequencies of Interest

FREQUENCY	APPLICATION OR ALLOCATION	EMIRR IN+
400 MHz	Mobile radio, mobile satellite, space operation, weather, radar, ultra-high frequency (UHF) applications	73.2 dB
900 MHz	Global system for mobile communications (GSM) applications, radio communication, navigation, GPS (to 1.6 GHz), GSM, aeronautical mobile, UHF applications	82.5 dB
1.8 GHz	GSM applications, mobile personal communications, broadband, satellite, L-band (1 GHz to 2 GHz)	89.7 dB
2.4 GHz	802.11b, 802.11g, 802.11n, Bluetooth®, mobile personal communications, industrial, scientific and medical (ISM) radio band, amateur radio and satellite, S-band (2 GHz to 4 GHz)	93.9 dB
3.6 GHz	Radiolocation, aero communication and navigation, satellite, mobile, S-band	95.7 dB
5 GHz	802.11a, 802.11n, aero communication and navigation, mobile communication, space and satellite operation, C-band (4 GHz to 8 GHz)	98.0 dB

Copyright © 2022 Texas Instruments Incorporated

7.3.3 Thermal Protection

The internal power dissipation of any amplifier causes its internal (junction) temperature to rise. This phenomenon is called *self heating*. The absolute maximum junction temperature of the OPAx991 is 150°C. Exceeding this temperature causes damage to the device. The OPAx991 has a thermal protection feature that reduces damage from self heating. The protection works by monitoring the temperature of the device and turning off the op amp output drive for temperatures above 170°C. Figure 7-4 shows an application example for the OPA991 that has significant self heating because of its power dissipation (0.81 W). Thermal calculations indicate that for an ambient temperature of 65°C, the device junction temperature must reach 177°C. The actual device, however, turns off the output drive to recover towards a safe junction temperature. Figure 7-4 shows how the circuit behaves during thermal protection. During normal operation, the device acts as a buffer so the output is 3 V. When self heating causes the device junction temperature to increase above the internal limit, the thermal protection forces the output to a high-impedance state and the output is pulled to ground through resistor R_L. If the condition that caused excessive power dissipation is not removed, the amplifier will oscillate between a shutdown and enabled state until the output fault is corrected.

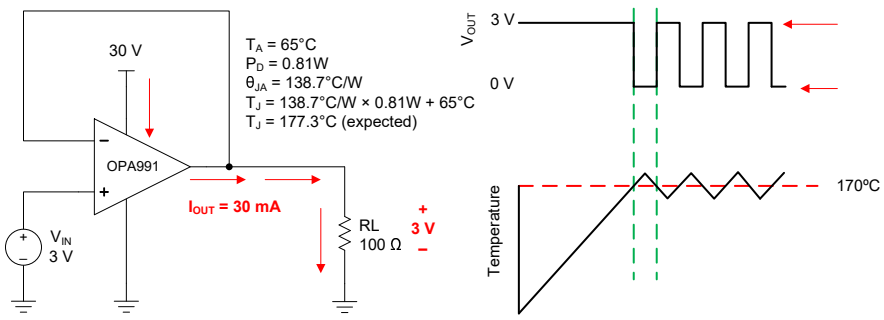

Figure 7-4. Thermal Protection

If the device continues to operate at high junction temperatures with high output power over a long period of time, regardless if the device is or is not entering thermal shutdown, the thermal dissipation of the device can slowly degrade performance of the device and eventually cause catastrophic destruction. Designers should be careful to limit output power of the device at high temperatures, or control ambient and junction temperatures under high output power conditions.

7.3.4 Capacitive Load and Stability

The OPAx991 features a resistive output stage capable of driving moderate capacitive loads, and by leveraging an isolation resistor, the device can easily be configured to drive large capacitive loads. Increasing the gain enhances the ability of the amplifier to drive greater capacitive loads; see Figure 7-5 and Figure 7-6. The particular op amp circuit configuration, layout, gain, and output loading are some of the factors to consider when establishing whether an amplifier will be stable in operation.

Copyright © 2022 Texas Instruments Incorporated

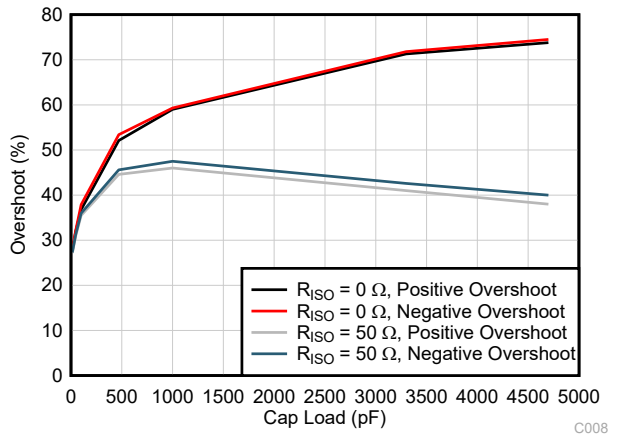

Figure 7-5. Small-Signal Overshoot vs Capacitive Load (10-mV Output Step, G = 1)

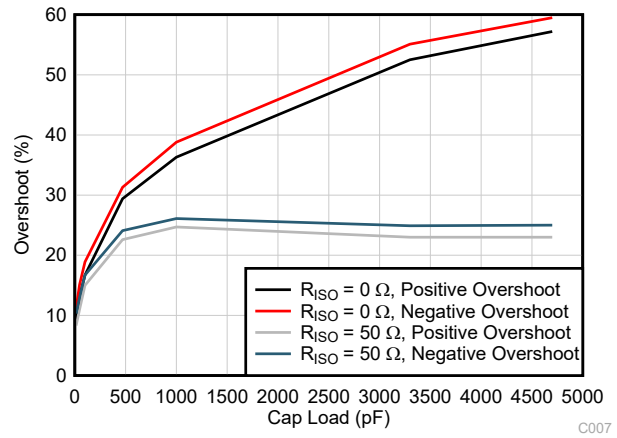

Figure 7-6. Small-Signal Overshoot vs Capacitive Load (10-mV Output Step, G = –1)

For additional drive capability in unity-gain configurations, improve capacitive load drive by inserting a small resistor, R_{ISO}, in series with the output, as shown in Figure 7-7. This resistor significantly reduces ringing and maintains DC performance for purely capacitive loads. However, if a resistive load is in parallel with the capacitive load, then a voltage divider is created, thus introducing a gain error at the output and slightly reducing the output swing. The error introduced is proportional to the ratio R_{ISO} / R_L, and is generally negligible at low output levels. A high capacitive load drive makes the OPAx991 well suited for applications such as reference buffers, MOSFET gate drives, and cable-shield drives. The circuit shown in Figure 7-7 uses an isolation resistor, R_{ISO}, to stabilize the output of an op amp. R_{ISO} modifies the open-loop gain of the system for increased phase margin.

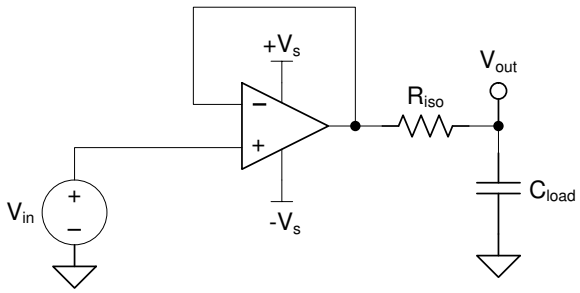

Figure 7-7. Extending Capacitive Load Drive With the OPA991

7.3.5 Common-Mode Voltage Range

The OPAx991 is a 40-V, true rail-to-rail input operational amplifier with an input common-mode range that extends 100 mV beyond either supply rail. This wide range is achieved with paralleled complementary N-channel and P-channel differential input pairs, as shown in Figure 7-8. The N-channel pair is active for input voltages close to the positive rail, typically (V+) – 1 V to 100 mV above the positive supply. The P-channel pair is active for inputs from 100 mV below the negative supply to approximately (V+) – 2 V. There is a small transition region, typically (V+) – 2 V to (V+) – 1 V in which both input pairs are on. This transition region can vary modestly with process variation, and within this region PSRR, CMRR, offset voltage, offset drift, noise, and THD performance may be degraded compared to operation outside this region.

Figure 6-5 shows this transition region for a typical device in terms of input voltage offset in more detail.

For more information on common-mode voltage range and PMOS/NMOS pair interaction, see *Op Amps With Complementary-Pair Input Stages* application note.

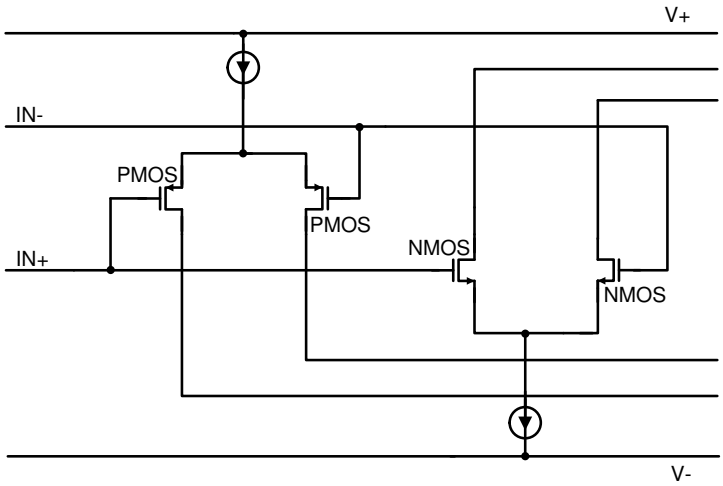

Figure 7-8. Rail-to-Rail Input Stage

7.3.6 Phase Reversal Protection

The OPAx991 family has internal phase-reversal protection. Many op amps exhibit a phase reversal when the input is driven beyond its linear common-mode range. This condition is most often encountered in non-inverting circuits when the input is driven beyond the specified common-mode voltage range, causing the output to reverse into the opposite rail. The OPAx991 is a rail-to-rail input op amp; therefore, the common-mode range can extend up to the rails. Input signals beyond the rails do not cause phase reversal; instead, the output limits into the appropriate rail. This performance is shown in Figure 7-9. For more information on phase reversal, see *Op Amps With Complementary-Pair Input Stages* application note.

Copyright © 2022 Texas Instruments Incorporated

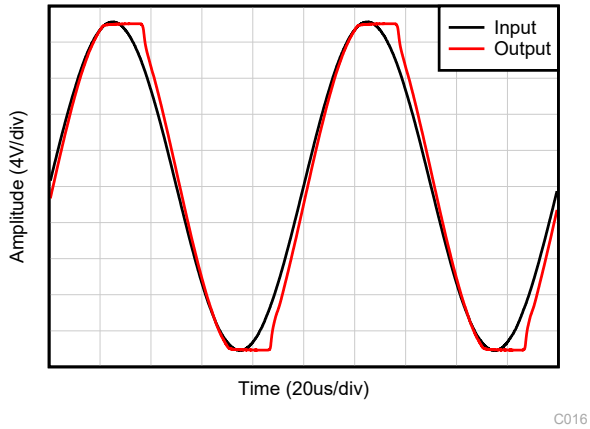

Figure 7-9. No Phase Reversal

7.3.7 Electrical Overstress

Designers often ask questions about the capability of an operational amplifier to withstand electrical overstress (EOS). These questions tend to focus on the device inputs, but may involve the supply voltage pins or even the output pin. Each of these different pin functions have electrical stress limits determined by the voltage breakdown characteristics of the particular semiconductor fabrication process and specific circuits connected to the pin. Additionally, internal electrostatic discharge (ESD) protection is built into these circuits to protect them from accidental ESD events both before and during product assembly.

Having a good understanding of this basic ESD circuitry and its relevance to an electrical overstress event is helpful. Figure 7-10 shows an illustration of the ESD circuits contained in the OPAx991 (indicated by the dashed line area). The ESD protection circuitry involves several current-steering diodes connected from the input and output pins and routed back to the internal power-supply lines, where the diodes meet at an absorption device or the power-supply ESD cell, internal to the operational amplifier. This protection circuitry is intended to remain inactive during normal circuit operation.

Copyright © 2022 Texas Instruments Incorporated

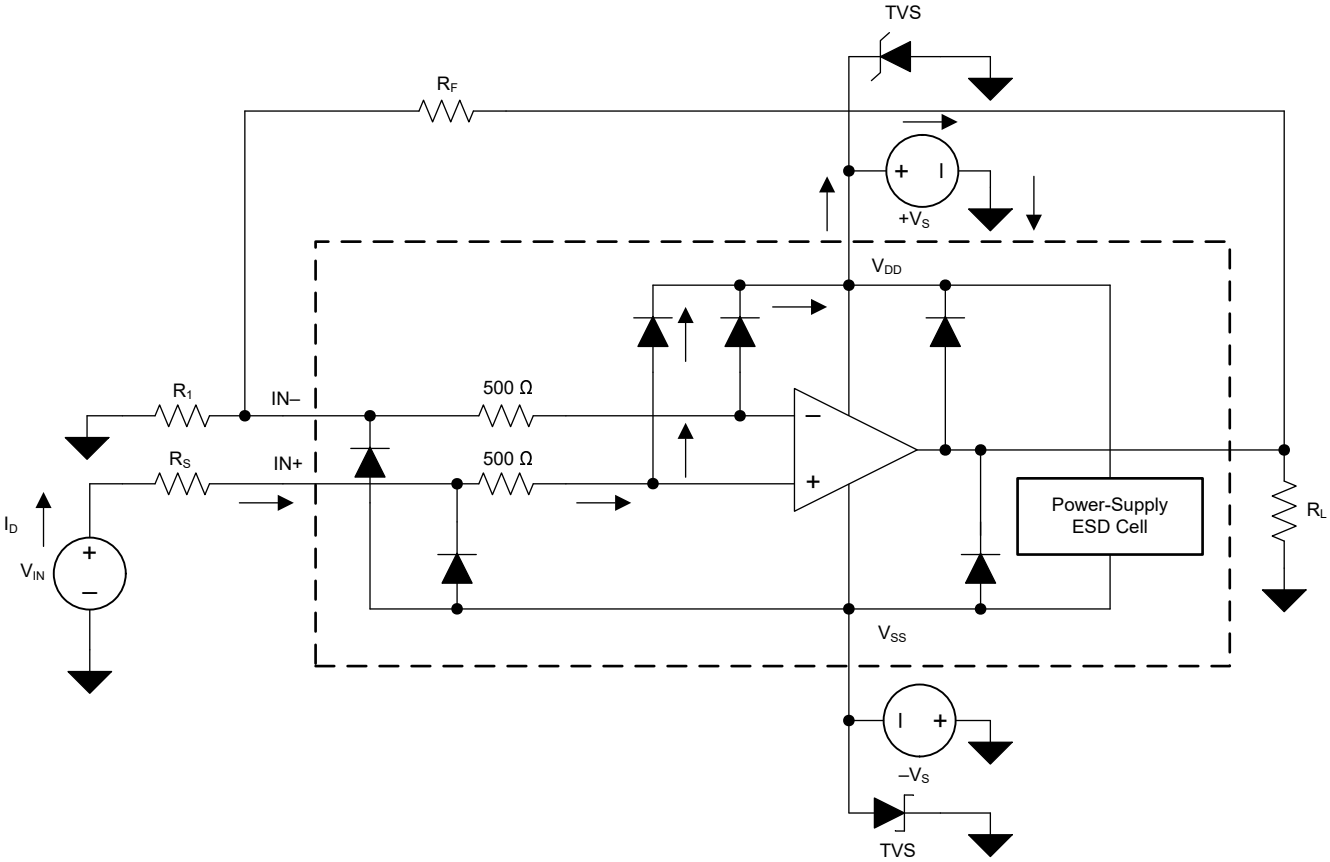

Figure 7-10. Equivalent Internal ESD Circuitry Relative to a Typical Circuit Application

An ESD event is very short in duration and very high voltage (for example; 1 kV, 100 ns), whereas an EOS event is long duration and lower voltage (for example; 50 V, 100 ms). The ESD diodes are designed for out-of-circuit ESD protection (that is, during assembly, test, and storage of the device before being soldered to the PCB). During an ESD event, the ESD signal is passed through the ESD steering diodes to an absorption circuit (labeled ESD power-supply circuit). The ESD absorption circuit clamps the supplies to a safe level.

Although this behavior is necessary for out-of-circuit protection, excessive current and damage is caused if activated in-circuit. A transient voltage suppressors (TVS) can be used to prevent against damage caused by turning on the ESD absorption circuit during an in-circuit ESD event. Using the appropriate current limiting resistors and TVS diodes allows for the use of device ESD diodes to protect against EOS events.

Copyright © 2022 Texas Instruments Incorporated

7.3.8 Overload Recovery

Overload recovery is defined as the time required for the op amp output to recover from a saturated state to a linear state. The output devices of the op amp enter a saturation region when the output voltage exceeds the rated operating voltage, either due to the high input voltage or the high gain. After the device enters the saturation region, the charge carriers in the output devices require time to return back to the linear state. After the charge carriers return back to the linear state, the device begins to slew at the specified slew rate. Thus, the propagation delay in case of an overload condition is the sum of the overload recovery time and the slew time. The overload recovery time for the OPAx991 is approximately 500 ns.

7.3.9 Typical Specifications and Distributions

Designers often have questions about a typical specification of an amplifier in order to design a more robust circuit. Due to natural variation in process technology and manufacturing procedures, every specification of an amplifier will exhibit some amount of deviation from the ideal value, like an amplifier's input offset voltage. These deviations often follow *Gaussian* ("bell curve"), or *normal* distributions, and circuit designers can leverage this information to guardband their system, even when there is not a minimum or maximum specification in Section 6.7.

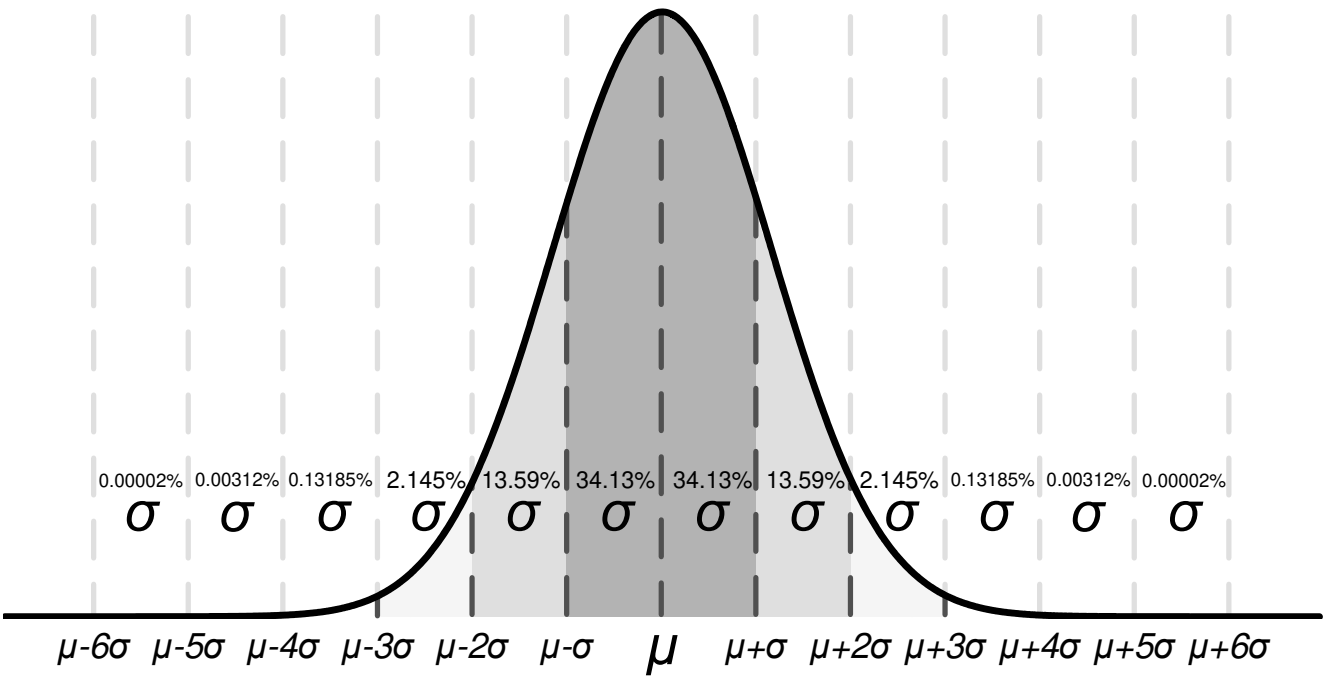

Figure 7-11. Ideal Gaussian Distribution

Figure 7-11 shows an example distribution, where *μ*, or *mu*, is the mean of the distribution, and where *σ*, or *sigma*, is the standard deviation of a system. For a specification that exhibits this kind of distribution, approximately two-thirds (68.26%) of all units can be expected to have a value within one standard deviation, or one sigma, of the mean (from *μ–σ* to *μ+σ*).

Depending on the specification, values listed in the *typical* column of Section 6.7 are represented in different ways. As a general rule of thumb, if a specification naturally has a nonzero mean (for example, like gain bandwidth), then the typical value is equal to the mean (μ). However, if a specification naturally has a mean near zero (like input offset voltage), then the typical value is equal to the mean plus one standard deviation (μ + σ) in order to most accurately represent the typical value.

You can use this chart to calculate approximate probability of a specification in a unit; for example, for OPAx991, the typical input voltage offset is 125 μV, so 68.2% of all OPAx991 devices are expected to have an offset from

–125 µV to 125 µV. At 4 σ (±500 µV), 99.9937% of the distribution has an offset voltage less than ±500 µV, which means 0.0063% of the population is outside of these limits, which corresponds to about 1 in 15,873 units.

Specifications with a value in the minimum or maximum column are assured by TI, and units outside these limits will be removed from production material. For example, the OPAx991 family has a maximum offset voltage of 675 µV at 25°C, and even though this corresponds to about 5 σ (≈1 in 1.7 million units), which is extremely unlikely, TI assures that any unit with larger offset than 675 µV will be removed from production material.

For specifications with no value in the minimum or maximum column, consider selecting a sigma value of sufficient guardband for your application, and design worst-case conditions using this value. For example, the 6-σ value corresponds to about 1 in 500 million units, which is an extremely unlikely chance, and could be an option as a wide guardband to design a system around. In this case, the OPAx991 family does not have a maximum or minimum for offset voltage drift, but based on Figure 6-2 and the typical value of 0.3 µV/°C in Section 6.7, it can be calculated that the 6-σ value for offset voltage drift is about 1.8 µV/°C. When designing for worst-case system conditions, this value can be used to estimate the worst possible offset across temperature without having an actual minimum or maximum value.

However, process variation and adjustments over time can shift typical means and standard deviations, and unless there is a value in the minimum or maximum specification column, TI cannot assure the performance of a device. This information should be used only to estimate the performance of a device.

7.3.10 Packages With an Exposed Thermal Pad

The OPAx991 family is available in the WSON-8 (DSG) package which features an exposed thermal pad. Inside the package, the die is attached to this thermal pad using an electrically conductive compound. For this reason, when using a package with an exposed thermal pad, the thermal pad must either be connected to V– or left floating. Attaching the thermal pad to a potential other than V– is not allowed, and performance of the device is not assured when doing so.

7.3.11 Shutdown

The OPAx991S devices feature one or more shutdown pins (SHDN) that disable the op amp, placing it into a low-power standby mode. In this mode, the op amp typically consumes about 30 µA. The SHDN pins are active high, meaning that shutdown mode is enabled when the input to the SHDN pin is a valid logic high. The amplifier is enabled when the input to the SHDN pin is a valid logic low.

The SHDN pins are referenced to the negative supply rail of the op amp. The threshold of the shutdown feature lies around 800 mV (typical) and does not change with respect to the supply voltage. Hysteresis has been included in the switching threshold to ensure smooth switching characteristics. To ensure optimal shutdown behavior, the SHDN pins should be driven with valid logic signals. A valid logic low is defined as a voltage between V– and V– + 0.2 V. A valid logic high is defined as a voltage between V– + 1.1 V and V– + 20 V or V+, whichever is lower. The shutdown pin circuitry includes a pull-down resistor, which will inherently pull the voltage of the pin to the negative supply rail if not driven. Thus, to enable the amplifier, the SHDN pins should either be left floating or driven to a valid logic low. To disable the amplifier, the SHDN pins must be driven to a valid logic high. The maximum voltage allowed at the SHDN pins is V– + 20 V or V+, whichever is lower. Exceeding V– + 20 V or V+, whichever is lower, will damage the device.

The SHDN pins are high-impedance CMOS inputs. Channels of single and dual op amp packages are independently controlled, and channels of quad op amp packages are controlled in pairs. For battery-operated applications, this feature may be used to greatly reduce the average current and extend battery life. The typical enable time out of shutdown is 8 µs; disable time is 3 µs. When disabled, the output assumes a high-impedance state. This architecture allows the OPAx991S family to operate as a gated amplifier, multiplexer, or programmable-gain amplifier. Shutdown time (t_{OFF}) depends on loading conditions and increases as load resistance increases. To ensure shutdown (disable) within a specific shutdown time, the specified 10-kΩ load to midsupply (V_S / 2) is required. If using the OPAx991S without a load, the resulting turnoff time significantly increases.

Copyright © 2022 Texas Instruments Incorporated

7.4 Device Functional Modes

The OPAx991 has a single functional mode and is operational when the power-supply voltage is greater than 2.7 V (±1.35 V). The maximum power supply voltage for the OPAx991 is 40 V (±20 V).

The OPAx991S devices feature a shutdown pin, which can be used to place the op amp into a low-power mode. See Section 7.3.11 for more information.

8 Application and Implementation

Note

Information in the following applications sections is not part of the TI component specification, and TI does not warrant its accuracy or completeness. TI's customers are responsible for determining suitability of components for their purposes, as well as validating and testing their design implementation to confirm system functionality.

8.1 Application Information

The OPAx991 family offers excellent DC precision and AC performance. These devices operate up to 40-V supply rails and offer true rail-to-rail input/output, low offset voltage and offset voltage drift, as well as 4.5-MHz bandwidth and high output drive. These features make the OPAx991 a robust, high-performance operational amplifier for high-voltage industrial applications.

8.2 Typical Applications

8.2.1 Low-Side Current Measurement

Figure 8-1 shows the OPA991 configured in a low-side current sensing application. For a full analysis of the circuit shown in Figure 8-1 including theory, calculations, simulations, and measured data, see TI Precision Design TIPD129, *0-A to 1-A Single-Supply Low-Side Current-Sensing Solution*.

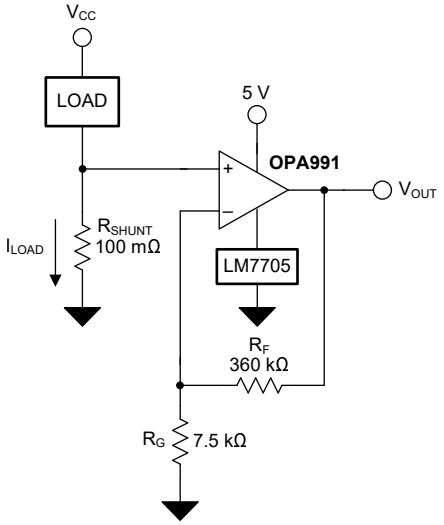

Figure 8-1. OPA991 in a Low-Side, Current-Sensing Application

8.2.1.1 Design Requirements

The design requirements for this design are:

- Load current: 0 A to 1 A
- Output voltage: 4.9 V
- Maximum shunt voltage: 100 mV

Copyright © 2022 Texas Instruments Incorporated

8.2.1.2 Detailed Design Procedure

The transfer function of the circuit in Figure 8-1 is given in Equation 1:

$$V_{OUT} = I_{LOAD} \times R_{SHUNT} \times Gain \tag{1}$$

The load current (I_{LOAD}) produces a voltage drop across the shunt resistor (R_{SHUNT}). The load current is set from 0 A to 1 A. To keep the shunt voltage below 100 mV at maximum load current, the largest shunt resistor is defined using Equation 2:

$$R_{SHUNT} = \frac{V_{SHUNT_MAX}}{I_{LOAD_MAX}} = \frac{100mV}{1A} = 100m\Omega \tag{2}$$

Using Equation 2, R_{SHUNT} is calculated to be 100 mΩ. The voltage drop produced by I_{LOAD} and R_{SHUNT} is amplified by the OPA991 to produce an output voltage of 0 V to 4.9 V. The gain needed by the OPA991 to produce the necessary output voltage is calculated using Equation 3:

$$Gain = \frac{\left(V_{OUT_MAX} - V_{OUT_MIN}\right)}{\left(V_{IN_MAX} - V_{IN_MIN}\right)} \tag{3}$$

Using Equation 3, the required gain is calculated to be 49 V/V, which is set with resistors R_F and R_G. Equation 4 is used to size the resistors, R_F and R_G, to set the gain of the OPA991 to 49 V/V.

$$Gain = 1 + \frac{\left(R_F\right)}{\left(R_G\right)} \tag{4}$$

Choosing R_F as 360 kΩ, R_G is calculated to be 7.5 kΩ. R_F and R_G were chosen as 360 kΩ and 7.5 kΩ because they are standard value resistors that create a 49:1 ratio. Other resistors that create a 49:1 ratio can also be used. Figure 8-2 shows the measured transfer function of the circuit shown in Figure 8-1.

8.2.1.3 Application Curves

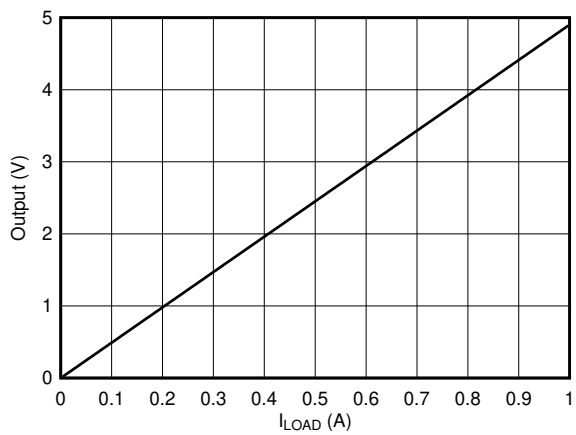

Figure 8-2. Low-Side, Current-Sense, Transfer Function

9 Power Supply Recommendations

The OPAx991 is specified for operation from 2.7 V to 40 V (±1.35 V to ±20 V); many specifications apply from –40°C to 125°C. Parameters that can exhibit significant variance with regard to operating voltage or temperature are presented in Section 6.8.

CAUTION

Supply voltages larger than 40 V can permanently damage the device; see Section 6.1.

Place 0.1-µF bypass capacitors close to the power-supply pins to reduce errors coupling in from noisy or high-impedance power supplies. For more detailed information on bypass capacitor placement, refer to Section 10.

10 Layout

10.1 Layout Guidelines

For best operational performance of the device, use good PCB layout practices, including:

- Noise can propagate into analog circuitry through the power pins of the circuit as a whole and op amp itself. Bypass capacitors are used to reduce the coupled noise by providing low-impedance power sources local to the analog circuitry.
  - Connect low-ESR, 0.1-µF ceramic bypass capacitors between each supply pin and ground, placed as close to the device as possible. A single bypass capacitor from V+ to ground is applicable for single-supply applications.
- Separate grounding for analog and digital portions of circuitry is one of the simplest and most-effective methods of noise suppression. One or more layers on multilayer PCBs are usually devoted to ground planes. A ground plane helps distribute heat and reduces EMI noise pickup. Make sure to physically separate digital and analog grounds paying attention to the flow of the ground current.
- In order to reduce parasitic coupling, run the input traces as far away from the supply or output traces as possible. If these traces cannot be kept separate, crossing the sensitive trace perpendicular is much better as opposed to in parallel with the noisy trace.
- Place the external components as close to the device as possible. As illustrated in Figure 10-2, keeping RF and RG close to the inverting input minimizes parasitic capacitance.
- Keep the length of input traces as short as possible. Always remember that the input traces are the most sensitive part of the circuit.
- Consider a driven, low-impedance guard ring around the critical traces. A guard ring can significantly reduce leakage currents from nearby traces that are at different potentials.
- Cleaning the PCB following board assembly is recommended for best performance.
- Any precision integrated circuit may experience performance shifts due to moisture ingress into the plastic package. Following any aqueous PCB cleaning process, baking the PCB assembly is recommended to remove moisture introduced into the device packaging during the cleaning process. A low temperature, post cleaning bake at 85°C for 30 minutes is sufficient for most circumstances.

Copyright © 2022 Texas Instruments Incorporated

10.2 Layout Example

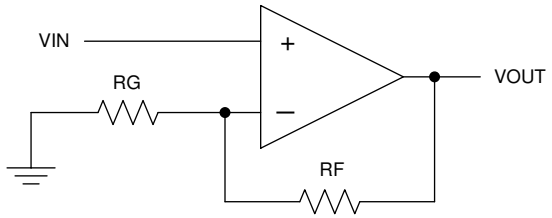

Figure 10-1. Schematic Representation

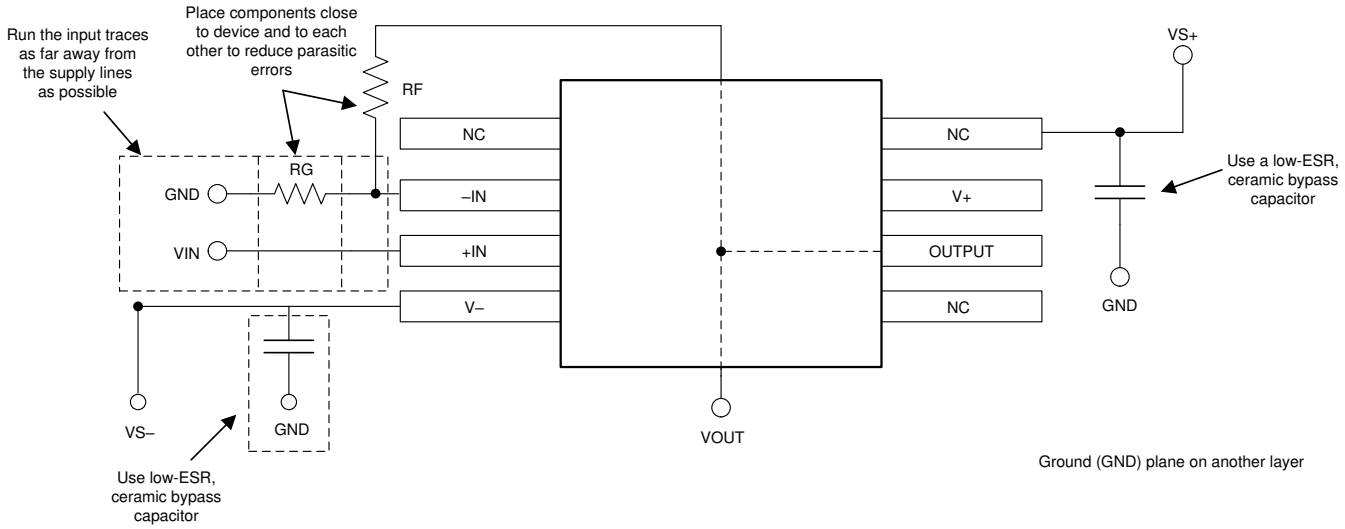

Figure 10-2. Operational Amplifier Board Layout for Noninverting Configuration

11 Device and Documentation Support

11.1 Device Support

11.1.1 Development Support

11.1.1.1 TINA-TI™ (Free Software Download)

TINA™ is a simple, powerful, and easy-to-use circuit simulation program based on a SPICE engine. TINA-TI is a free, fully-functional version of the TINA software, preloaded with a library of macro models in addition to a range of both passive and active models. TINA-TI provides all the conventional dc, transient, and frequency domain analysis of SPICE, as well as additional design capabilities.

Available as a free download from the Analog eLab Design Center, TINA-TI offers extensive post-processing capability that allows users to format results in a variety of ways. Virtual instruments offer the ability to select input waveforms and probe circuit nodes, voltages, and waveforms, creating a dynamic quick-start tool.

Note

These files require that either the TINA software (from DesignSoft™) or TINA-TI software be installed. Download the free TINA-TI software from the TINA-TI folder.

11.1.1.2 TI Precision Designs

The OPAx991 is featured in several TI Precision Designs, available online at http://www.ti.com/ww/en/analog/precision-designs/. TI Precision Designs are analog solutions created by TI's precision analog applications experts and offer the theory of operation, component selection, simulation, complete PCB schematic and layout, bill of materials, and measured performance of many useful circuits.

11.2 Documentation Support

11.2.1 Related Documentation

For related documentation, see the following:

Texas Instruments, *Analog Engineer's Circuit Cookbook: Amplifiers* solution guide

Texas Instruments, *AN31 Amplifier Circuit Collection* application note

Texas Instruments, *MUX-Friendly Precision Operational Amplifiers* application brief

Texas Instruments, *EMI Rejection Ratio of Operational Amplifiers* application report

Texas Instruments, *Op Amps With Complementary-Pair Input Stages* application note

11.3 Receiving Notification of Documentation Updates

To receive notification of documentation updates, navigate to the device product folder on ti.com. Click on *Subscribe to updates* to register and receive a weekly digest of any product information that has changed. For change details, review the revision history included in any revised document.

11.4 Support Resources

TI E2E™ support forums are an engineer's go-to source for fast, verified answers and design help — straight from the experts. Search existing answers or ask your own question to get the quick design help you need.

Linked content is provided "AS IS" by the respective contributors. They do not constitute TI specifications and do not necessarily reflect TI's views; see TI's Terms of Use.

11.5 Trademarks

TINA-TI™ are trademarks of Texas Instruments, Inc and DesignSoft, Inc.
TINA™ and DesignSoft™ are trademarks of DesignSoft, Inc.
TI E2E™ is a trademark of Texas Instruments.
Bluetooth® is a registered trademark of Bluetooth SIG, Inc.
All trademarks are the property of their respective owners.

Copyright © 2022 Texas Instruments Incorporated

11.6 Electrostatic Discharge Caution

This integrated circuit can be damaged by ESD. Texas Instruments recommends that all integrated circuits be handled with appropriate precautions. Failure to observe proper handling and installation procedures can cause damage.

ESD damage can range from subtle performance degradation to complete device failure. Precision integrated circuits may be more susceptible to damage because very small parametric changes could cause the device not to meet its published specifications.

11.7 Glossary

TI Glossary This glossary lists and explains terms, acronyms, and definitions.

12 Mechanical, Packaging, and Orderable Information

The following pages include mechanical, packaging, and orderable information. This information is the most current data available for the designated devices. This data is subject to change without notice and revision of this document. For browser-based versions of this data sheet, refer to the left-hand navigation.

Copyright © 2022 Texas Instruments Incorporated

PACKAGING INFORMATION

Orderable part number	Status (1)	Material type (2)	Package | Pins	Package qty | Carrier	RoHS (3)	Lead finish/ Ball material (4)	MSL rating/ Peak reflow (5)	Op temp (°C)	Part marking (6)
OPA2991IDDFR	Active	Production	SOT-23-THIN (DDF) | 8	3000 | LARGE T&R	Yes	NIPDAU	Level-1-260C-UNLIM	-40 to 125	O91F
OPA2991IDDFR.A	Active	Production	SOT-23-THIN (DDF) | 8	3000 | LARGE T&R	Yes	NIPDAU	Level-1-260C-UNLIM	-40 to 125	O91F
OPA2991IDGKR	Active	Production	VSSOP (DGK) | 8	2500 | LARGE T&R	Yes	NIPDAU | SN	Level-1-260C-UNLIM	-40 to 125	26UT
OPA2991IDGKR.A	Active	Production	VSSOP (DGK) | 8	2500 | LARGE T&R	Yes	NIPDAU	Level-1-260C-UNLIM	-40 to 125	26UT
OPA2991IDR	Active	Production	SOIC (D) | 8	2500 | LARGE T&R	Yes	NIPDAU	Level-1-260C-UNLIM	-40 to 125	OP2991
OPA2991IDR.A	Active	Production	SOIC (D) | 8	2500 | LARGE T&R	Yes	NIPDAU	Level-1-260C-UNLIM	-40 to 125	OP2991
OPA2991IDRG4	Active	Production	SOIC (D) | 8	2500 | LARGE T&R	Yes	NIPDAU	Level-1-260C-UNLIM	-40 to 125	OP2991
OPA2991IDRG4.A	Active	Production	SOIC (D) | 8	2500 | LARGE T&R	Yes	NIPDAU	Level-1-260C-UNLIM	-40 to 125	OP2991
OPA2991IDSGR	Active	Production	WSON (DSG) | 8	3000 | LARGE T&R	Yes	SN	Level-1-260C-UNLIM	-40 to 125	O91G
OPA2991IDSGR.A	Active	Production	WSON (DSG) | 8	3000 | LARGE T&R	Yes	SN	Level-1-260C-UNLIM	-40 to 125	O91G
OPA2991IDSGRG4	Active	Production	WSON (DSG) | 8	3000 | LARGE T&R	Yes	NIPDAU	Level-1-260C-UNLIM	-40 to 125	O91G
OPA2991IDSGRG4.A	Active	Production	WSON (DSG) | 8	3000 | LARGE T&R	Yes	NIPDAU	Level-1-260C-UNLIM	-40 to 125	O91G
OPA2991IPWR	Active	Production	TSSOP (PW) | 8	2000 | LARGE T&R	Yes	NIPDAU	Level-1-260C-UNLIM	-40 to 125	O2991P
OPA2991IPWR.A	Active	Production	TSSOP (PW) | 8	2000 | LARGE T&R	Yes	NIPDAU	Level-1-260C-UNLIM	-40 to 125	O2991P
OPA2991SIRUGR	Active	Production	X2QFN (RUG) | 10	3000 | LARGE T&R	Yes	NIPDAUAG	Level-2-260C-1 YEAR	-40 to 125	GFF
OPA2991SIRUGR.A	Active	Production	X2QFN (RUG) | 10	3000 | LARGE T&R	Yes	NIPDAUAG	Level-2-260C-1 YEAR	-40 to 125	GFF
OPA4991IDR	Active	Production	SOIC (D) | 14	2500 | LARGE T&R	Yes	NIPDAU	Level-1-260C-UNLIM	-40 to 125	OPA4991D
OPA4991IDR.A	Active	Production	SOIC (D) | 14	2500 | LARGE T&R	Yes	NIPDAU	Level-1-260C-UNLIM	-40 to 125	OPA4991D
OPA4991IDYYR	Active	Production	SOT-23-THIN (DYY) | 14	3000 | LARGE T&R	Yes	NIPDAU	Level-1-260C-UNLIM	-40 to 125	OPA4991I
OPA4991IDYYR.A	Active	Production	SOT-23-THIN (DYY) | 14	3000 | LARGE T&R	Yes	NIPDAU	Level-1-260C-UNLIM	-40 to 125	OPA4991I
OPA4991IPWR	Active	Production	TSSOP (PW) | 14	2000 | LARGE T&R	Yes	NIPDAU | SN	Level-2-260C-1 YEAR	-40 to 125	(OP4991, OP4991PW)
OPA4991IPWR.A	Active	Production	TSSOP (PW) | 14	2000 | LARGE T&R	Yes	SN	Level-2-260C-1 YEAR	-40 to 125	(OP4991, OP4991PW)
OPA4991IPWRG4	Active	Production	TSSOP (PW) | 14	2000 | LARGE T&R	Yes	NIPDAU	Level-1-260C-UNLIM	-40 to 125	OP4991
OPA4991IPWRG4.A	Active	Production	TSSOP (PW) | 14	2000 | LARGE T&R	Yes	NIPDAU	Level-1-260C-UNLIM	-40 to 125	OP4991
OPA4991IRUCR	Active	Production	QFN (RUC) | 14	3000 | LARGE T&R	Yes	NIPDAU	Level-2-260C-1 YEAR	-40 to 125	I4F
OPA4991IRUCR.A	Active	Production	QFN (RUC) | 14	3000 | LARGE T&R	Yes	NIPDAU	Level-2-260C-1 YEAR	-40 to 125	I4F

Orderable part number	Status (1)	Material type (2)	Package | Pins	Package qty | Carrier	RoHS (3)	Lead finish/ Ball material (4)	MSL rating/ Peak reflow (5)	Op temp (°C)	Part marking (6)
OPA991IDBVR	Active	Production	SOT-23 (DBV) | 5	3000 | LARGE T&R	Yes	NIPDAU | SN	Level-1-260C-UNLIM	-40 to 125	O91V
OPA991IDBVR.A	Active	Production	SOT-23 (DBV) | 5	3000 | LARGE T&R	Yes	NIPDAU	Level-1-260C-UNLIM	-40 to 125	O91V
OPA991IDCKR	Active	Production	SC70 (DCK) | 5	3000 | LARGE T&R	Yes	SN	Level-2-260C-1 YEAR	-40 to 125	1HB
OPA991IDCKR.A	Active	Production	SC70 (DCK) | 5	3000 | LARGE T&R	Yes	SN	Level-2-260C-1 YEAR	-40 to 125	1HB
OPA991SIDBVR	Active	Production	SOT-23 (DBV) | 6	3000 | LARGE T&R	Yes	NIPDAU	Level-1-260C-UNLIM	-40 to 125	O91S
OPA991SIDBVR.A	Active	Production	SOT-23 (DBV) | 6	3000 | LARGE T&R	Yes	NIPDAU	Level-1-260C-UNLIM	-40 to 125	O91S
OPA991SIDBVRG4	Active	Production	SOT-23 (DBV) | 6	3000 | LARGE T&R	Yes	NIPDAU	Level-1-260C-UNLIM	-40 to 125	O91S
OPA991SIDBVRG4.A	Active	Production	SOT-23 (DBV) | 6	3000 | LARGE T&R	Yes	NIPDAU	Level-1-260C-UNLIM	-40 to 125	O91S
OPA991TIDCKR	Active	Production	SC70 (DCK) | 5	3000 | LARGE T&R	Yes	POST-PLAT AG SPOT | SN	Level-2-260C-1 YEAR	-40 to 125	1JE
OPA991TIDCKR.A	Active	Production	SC70 (DCK) | 5	3000 | LARGE T&R	Yes	SN	Level-2-260C-1 YEAR	-40 to 125	1JE

(1) **Status:** For more details on status, see our product life cycle.

(2) **Material type:** When designated, preproduction parts are prototypes/experimental devices, and are not yet approved or released for full production. Testing and final process, including without limitation quality assurance, reliability performance testing, and/or process qualification, may not yet be complete, and this item is subject to further changes or possible discontinuation. If available for ordering, purchases will be subject to an additional waiver at checkout, and are intended for early internal evaluation purposes only. These items are sold without warranties of any kind.

(3) **RoHS values:** Yes, No, RoHS Exempt. See the TI RoHS Statement for additional information and value definition.

(4) **Lead finish/Ball material:** Parts may have multiple material finish options. Finish options are separated by a vertical ruled line. Lead finish/Ball material values may wrap to two lines if the finish value exceeds the maximum column width.

(5) **MSL rating/Peak reflow:** The moisture sensitivity level ratings and peak solder (reflow) temperatures. In the event that a part has multiple moisture sensitivity ratings, only the lowest level per JEDEC standards is shown. Refer to the shipping label for the actual reflow temperature that will be used to mount the part to the printed circuit board.

(6) **Part marking:** There may be an additional marking, which relates to the logo, the lot trace code information, or the environmental category of the part.

Multiple part markings will be inside parentheses. Only one part marking contained in parentheses and separated by a "~" will appear on a part. If a line is indented then it is a continuation of the previous line and the two combined represent the entire part marking for that device.

Important Information and Disclaimer: The information provided on this page represents TI's knowledge and belief as of the date that it is provided. TI bases its knowledge and belief on information provided by third parties, and makes no representation or warranty as to the accuracy of such information. Efforts are underway to better integrate information from third parties. TI has taken and continues to take reasonable steps to provide representative

and accurate information but may not have conducted destructive testing or chemical analysis on incoming materials and chemicals. TI and TI suppliers consider certain information to be proprietary, and thus CAS numbers and other limited information may not be available for release.

In no event shall TI's liability arising out of such information exceed the total purchase price of the TI part(s) at issue in this document sold by TI to Customer on an annual basis.

OTHER QUALIFIED VERSIONS OF OPA2991, OPA4991, OPA991 :

- Automotive : OPA2991-Q1, OPA4991-Q1, OPA991-Q1
- Enhanced Product : OPA4991-EP

NOTE: Qualified Version Definitions:

- Automotive - Q100 devices qualified for high-reliability automotive applications targeting zero defects
- Enhanced Product - Supports Defense, Aerospace and Medical Applications

TAPE AND REEL INFORMATION

REEL DIMENSIONS

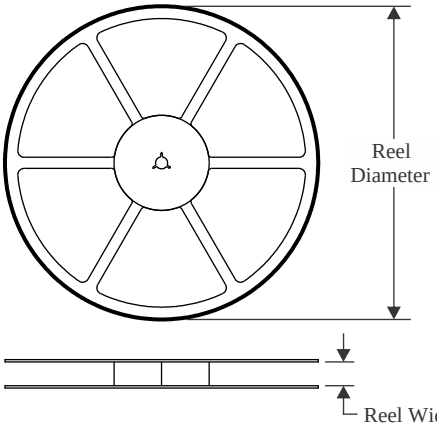

TAPE DIMENSIONS

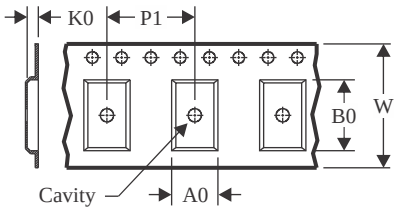

A0	Dimension designed to accommodate the component width
B0	Dimension designed to accommodate the component length
K0	Dimension designed to accommodate the component thickness
W	Overall width of the carrier tape
P1	Pitch between successive cavity centers

QUADRANT ASSIGNMENTS FOR PIN 1 ORIENTATION IN TAPE

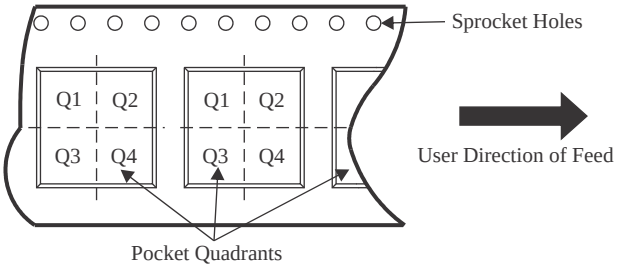

*All dimensions are nominal

Device	Package Type	Package Drawing	Pins	SPQ	Reel Diameter (mm)	Reel Width W1 (mm)	A0 (mm)	B0 (mm)	K0 (mm)	P1 (mm)	W (mm)	Pin1 Quadrant
OPA2991IDDFR	SOT-23-THIN	DDF	8	3000	180.0	8.4	3.2	3.2	1.4	4.0	8.0	Q3
OPA2991IDGKR	VSSOP	DGK	8	2500	330.0	12.4	5.3	3.4	1.4	8.0	12.0	Q1
OPA2991IDGKR	VSSOP	DGK	8	2500	330.0	12.4	5.3	3.4	1.4	8.0	12.0	Q1
OPA2991IDR	SOIC	D	8	2500	330.0	12.4	6.4	5.2	2.1	8.0	12.0	Q1
OPA2991IDRG4	SOIC	D	8	2500	330.0	12.4	6.4	5.2	2.1	8.0	12.0	Q1
OPA2991IDSGR	WSON	DSG	8	3000	180.0	8.4	2.3	2.3	1.15	4.0	8.0	Q2
OPA2991IDSGRG4	WSON	DSG	8	3000	180.0	8.4	2.3	2.3	1.15	4.0	8.0	Q2
OPA2991IPWR	TSSOP	PW	8	2000	330.0	12.4	7.0	3.6	1.6	8.0	12.0	Q1
OPA2991SIRUGR	X2QFN	RUG	10	3000	178.0	8.4	1.75	2.25	0.56	4.0	8.0	Q1
OPA4991IDR	SOIC	D	14	2500	330.0	16.4	6.5	9.0	2.1	8.0	16.0	Q1
OPA4991IDYYR	SOT-23-THIN	DYY	14	3000	330.0	12.4	4.8	3.6	1.6	8.0	12.0	Q3
OPA4991IPWR	TSSOP	PW	14	2000	330.0	12.4	6.9	5.3	1.6	8.0	12.0	Q1
OPA4991IPWR	TSSOP	PW	14	2000	330.0	12.4	6.9	5.6	1.6	8.0	12.0	Q1
OPA4991IPWR	TSSOP	PW	14	2000	330.0	12.4	6.9	5.6	1.6	8.0	12.0	Q1
OPA4991IPWRG4	TSSOP	PW	14	2000	330.0	12.4	6.9	5.6	1.6	8.0	12.0	Q1

Device	Package Type	Package Drawing	Pins	SPQ	Reel Diameter (mm)	Reel Width W1 (mm)	A0 (mm)	B0 (mm)	K0 (mm)	P1 (mm)	W (mm)	Pin1 Quadrant
OPA4991IRUCR	QFN	RUC	14	3000	180.0	9.5	2.16	2.16	0.5	4.0	8.0	Q2
OPA991IDBVR	SOT-23	DBV	5	3000	178.0	8.4	3.2	3.2	1.4	4.0	8.0	Q3
OPA991IDCKR	SC70	DCK	5	3000	178.0	9.0	2.4	2.5	1.2	4.0	8.0	Q3
OPA991SIDBVR	SOT-23	DBV	6	3000	180.0	8.4	3.2	3.2	1.4	4.0	8.0	Q3
OPA991SIDBVRG4	SOT-23	DBV	6	3000	180.0	8.4	3.2	3.2	1.4	4.0	8.0	Q3
OPA991TIDCKR	SC70	DCK	5	3000	178.0	8.4	2.25	2.45	1.2	4.0	8.0	Q3

TAPE AND REEL BOX DIMENSIONS

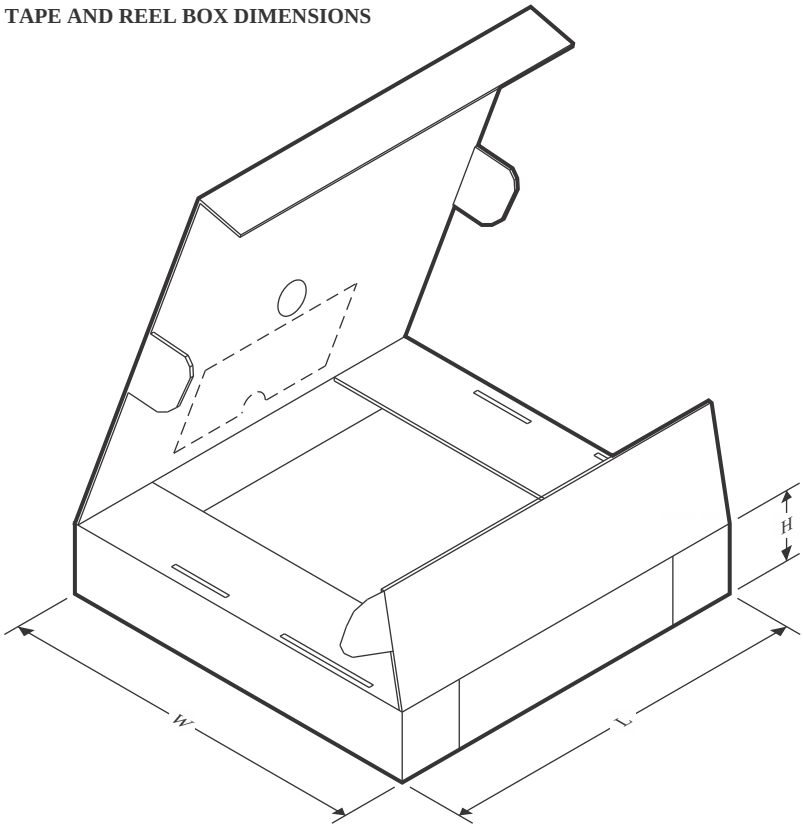

*All dimensions are nominal

Device	Package Type	Package Drawing	Pins	SPQ	Length (mm)	Width (mm)	Height (mm)
OPA2991IDDFR	SOT-23-THIN	DDF	8	3000	210.0	185.0	35.0
OPA2991IDGKR	VSSOP	DGK	8	2500	353.0	353.0	32.0
OPA2991IDGKR	VSSOP	DGK	8	2500	367.0	367.0	35.0
OPA2991IDR	SOIC	D	8	2500	353.0	353.0	32.0
OPA2991IDRG4	SOIC	D	8	2500	353.0	353.0	32.0
OPA2991IDSGR	WSON	DSG	8	3000	210.0	185.0	35.0
OPA2991IDSGRG4	WSON	DSG	8	3000	210.0	185.0	35.0
OPA2991IPWR	TSSOP	PW	8	2000	353.0	353.0	32.0
OPA2991SIRUGR	X2QFN	RUG	10	3000	205.0	200.0	33.0
OPA4991IDR	SOIC	D	14	2500	353.0	353.0	32.0
OPA4991IDYYR	SOT-23-THIN	DYY	14	3000	336.6	336.6	31.8
OPA4991IPWR	TSSOP	PW	14	2000	367.0	367.0	35.0
OPA4991IPWR	TSSOP	PW	14	2000	353.0	353.0	32.0
OPA4991IPWR	TSSOP	PW	14	2000	356.0	356.0	35.0
OPA4991IPWRG4	TSSOP	PW	14	2000	353.0	353.0	32.0
OPA4991IRUCR	QFN	RUC	14	3000	205.0	200.0	30.0
OPA991IDBVR	SOT-23	DBV	5	3000	208.0	191.0	35.0
OPA991IDCKR	SC70	DCK	5	3000	190.0	190.0	30.0

Device	Package Type	Package Drawing	Pins	SPQ	Length (mm)	Width (mm)	Height (mm)
OPA991SIDBVR	SOT-23	DBV	6	3000	210.0	185.0	35.0
OPA991SIDBVRG4	SOT-23	DBV	6	3000	210.0	185.0	35.0
OPA991TIDCKR	SC70	DCK	5	3000	208.0	191.0	35.0

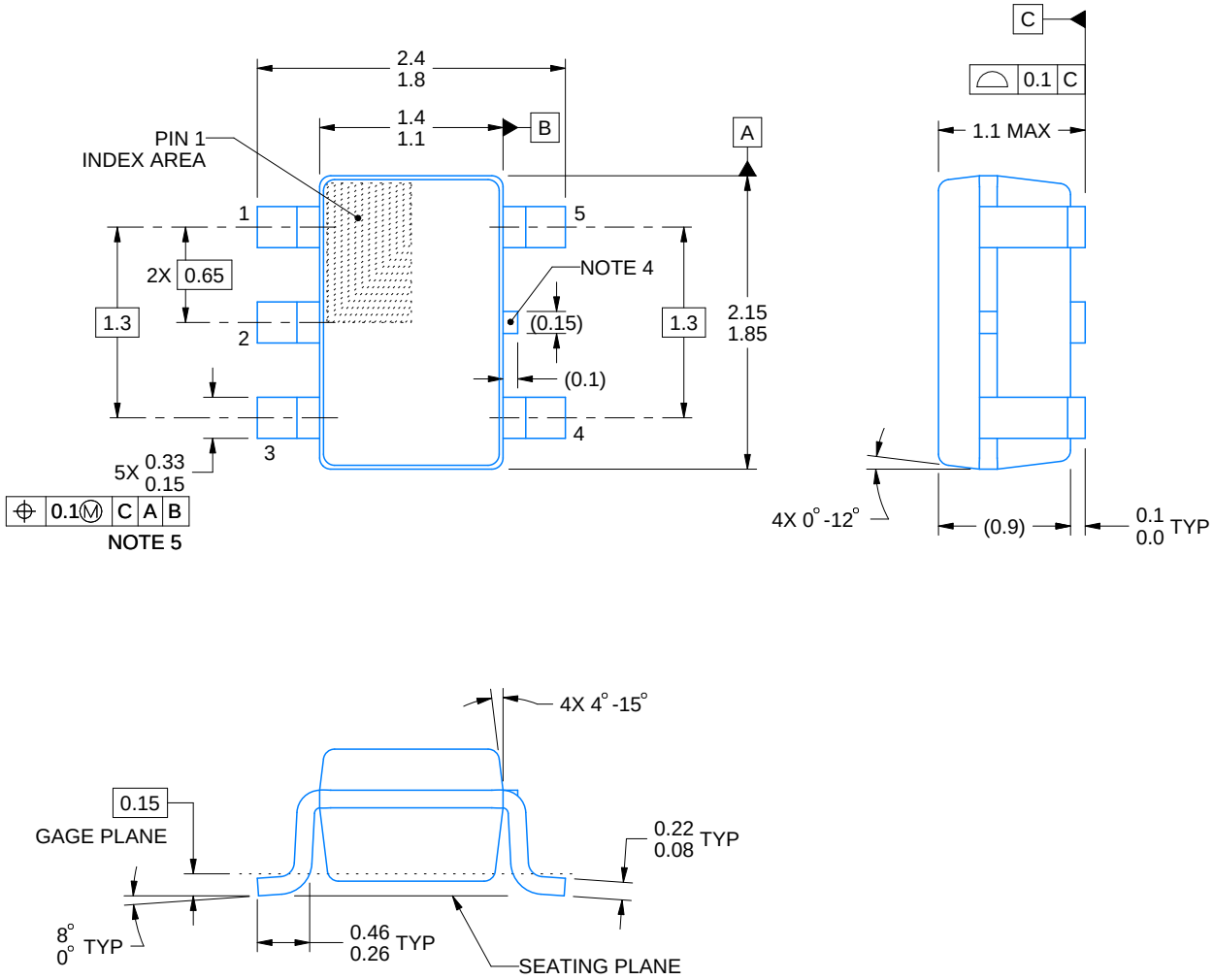

NOTES:

1. All linear dimensions are in millimeters. Any dimensions in parenthesis are for reference only. Dimensioning and tolerancing per ASME Y14.5M.
2. This drawing is subject to change without notice.
3. Refernce JEDEC MO-203.
4. Support pin may differ or may not be present.
5. Lead width does not comply with JEDEC.
6. Body dimensions do not include mold flash, protrusions, or gate burrs. Mold flash, protrusions, or gate burrs shall not exceed 0.25mm per side

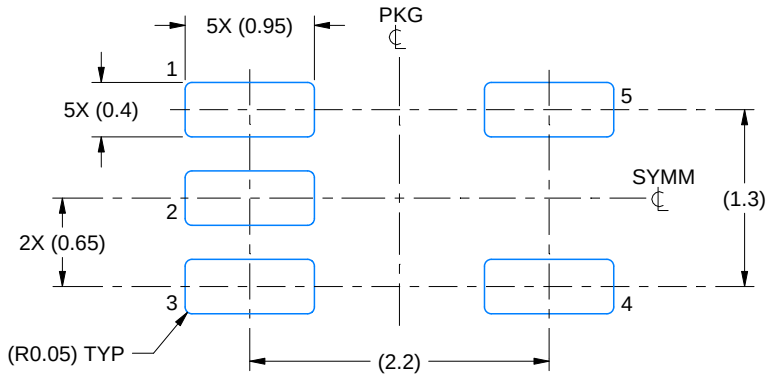

LAND PATTERN EXAMPLE
EXPOSED METAL SHOWN
SCALE:18X

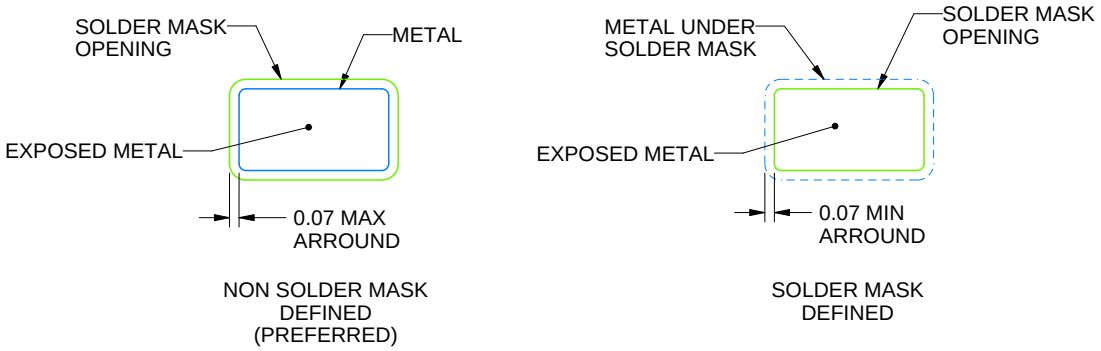

SOLDER MASK DETAILS

4214834/G 11/2024

NOTES: (continued)

7. Publication IPC-7351 may have alternate designs.
8. Solder mask tolerances between and around signal pads can vary based on board fabrication site.

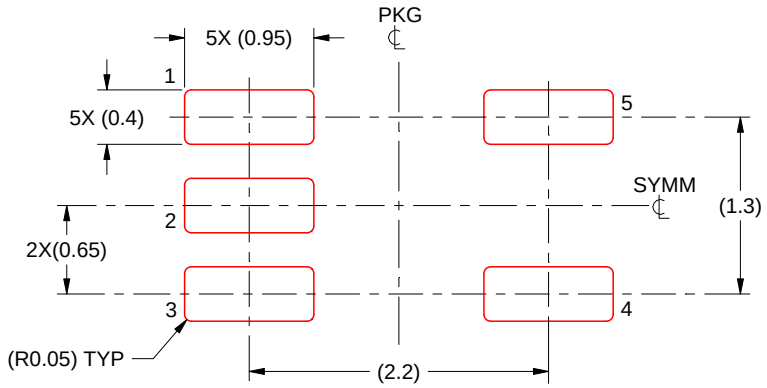

SOLDER PASTE EXAMPLE
BASED ON 0.125 THICK STENCIL
SCALE:18X

4214834/G 11/2024

NOTES: (continued)

9. Laser cutting apertures with trapezoidal walls and rounded corners may offer better paste release. IPC-7525 may have alternate design recommendations.
10. Board assembly site may have different recommendations for stencil design.

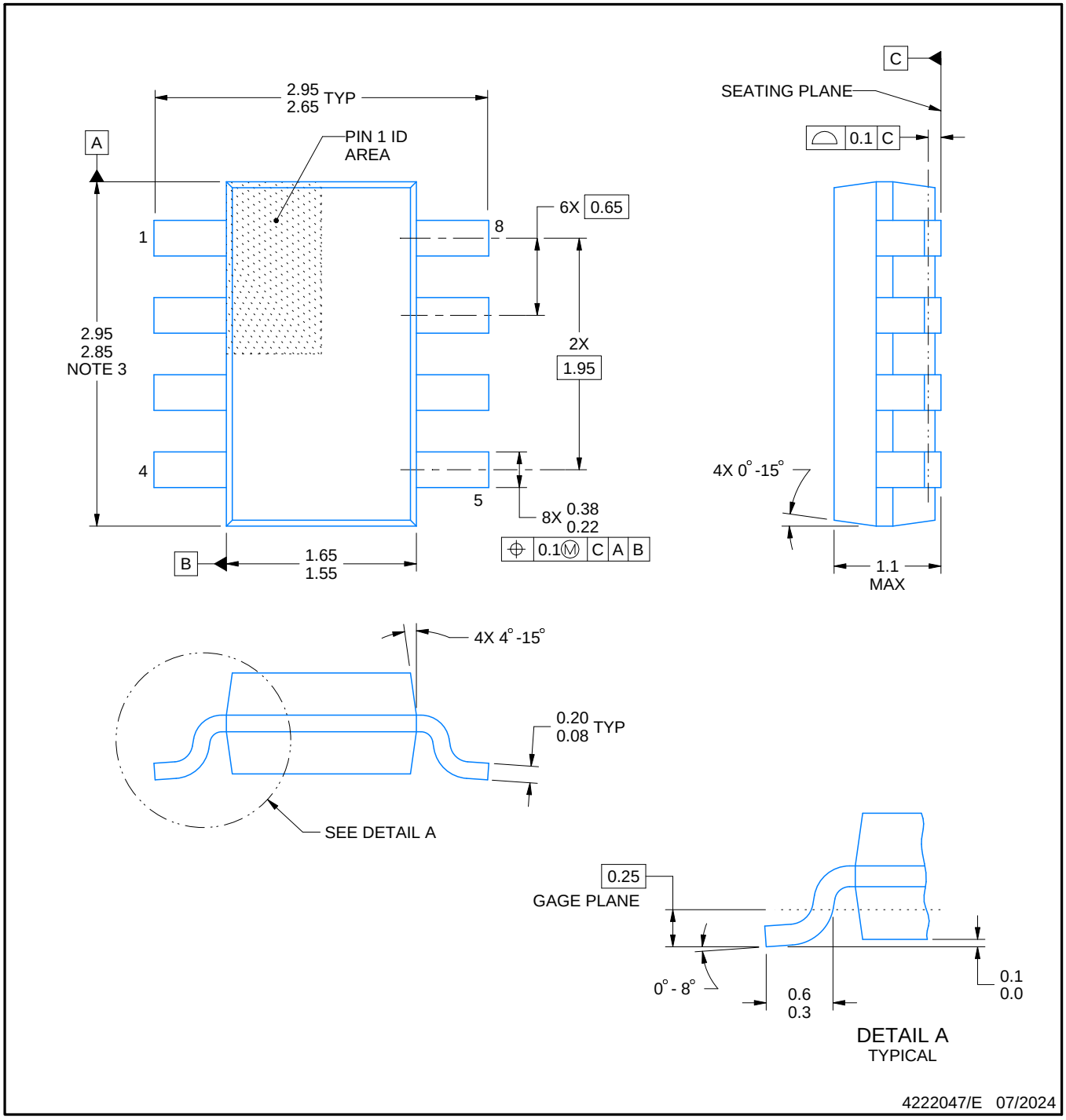

NOTES:

1. All linear dimensions are in millimeters. Any dimensions in parenthesis are for reference only. Dimensioning and tolerancing per ASME Y14.5M.
2. This drawing is subject to change without notice.
3. This dimension does not include mold flash, protrusions, or gate burrs. Mold flash, protrusions, or gate burrs shall not exceed 0.15 mm per side.

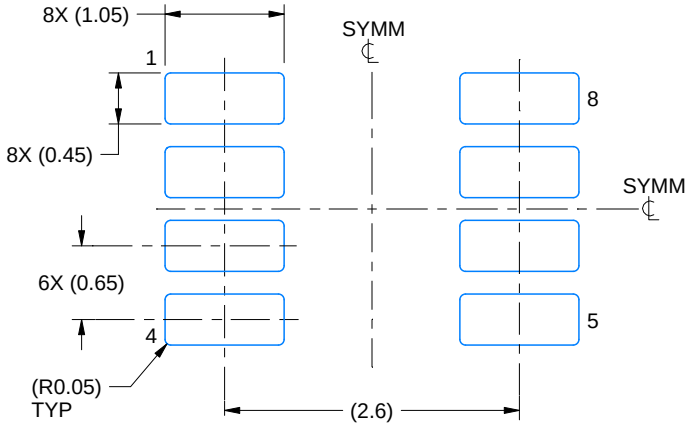

LAND PATTERN EXAMPLE
EXPOSED METAL SHOWN
SCALE:15X

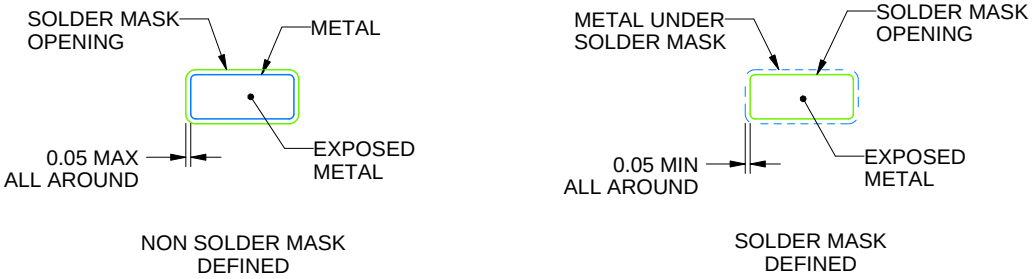

SOLDER MASK DETAILS

4222047/E 07/2024

NOTES: (continued)

4. Publication IPC-7351 may have alternate designs.
5. Solder mask tolerances between and around signal pads can vary based on board fabrication site.

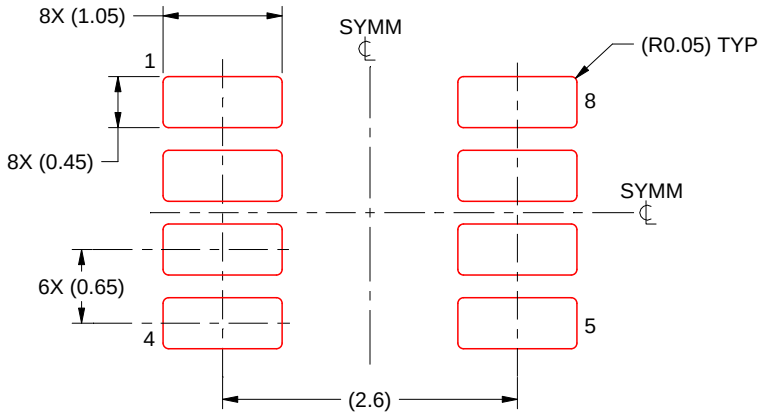

SOLDER PASTE EXAMPLE
BASED ON 0.125 mm THICK STENCIL
SCALE:15X

4222047/E 07/2024

NOTES: (continued)

6. Laser cutting apertures with trapezoidal walls and rounded corners may offer better paste release. IPC-7525 may have alternate design recommendations.
7. Board assembly site may have different recommendations for stencil design.

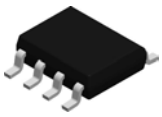

PACKAGE OUTLINE

D0008A

SOIC - 1.75 mm max height

SMALL OUTLINE INTEGRATED CIRCUIT

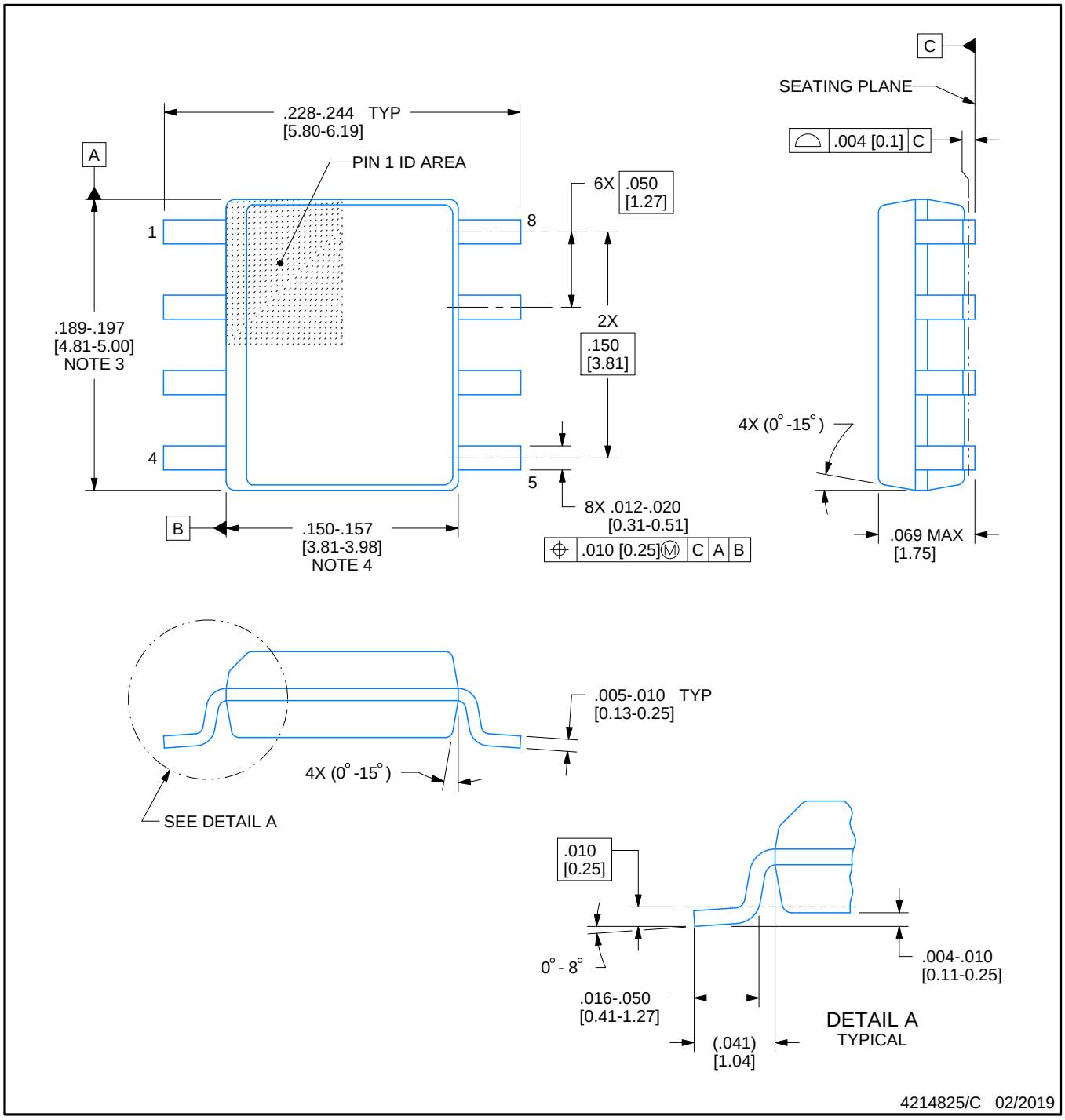

NOTES:

1. Linear dimensions are in inches [millimeters]. Dimensions in parenthesis are for reference only. Controlling dimensions are in inches. Dimensioning and tolerancing per ASME Y14.5M.
2. This drawing is subject to change without notice.
3. This dimension does not include mold flash, protrusions, or gate burrs. Mold flash, protrusions, or gate burrs shall not exceed .006 [0.15] per side.
4. This dimension does not include interlead flash.
5. Reference JEDEC registration MS-012, variation AA.

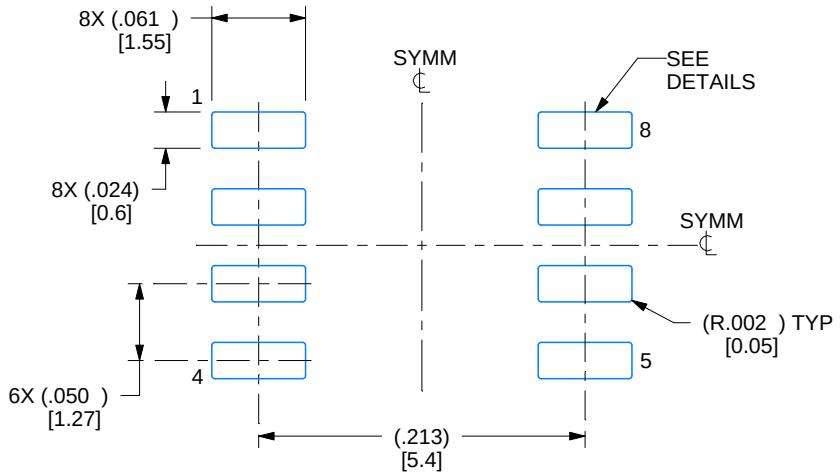

LAND PATTERN EXAMPLE
EXPOSED METAL SHOWN
SCALE:8X

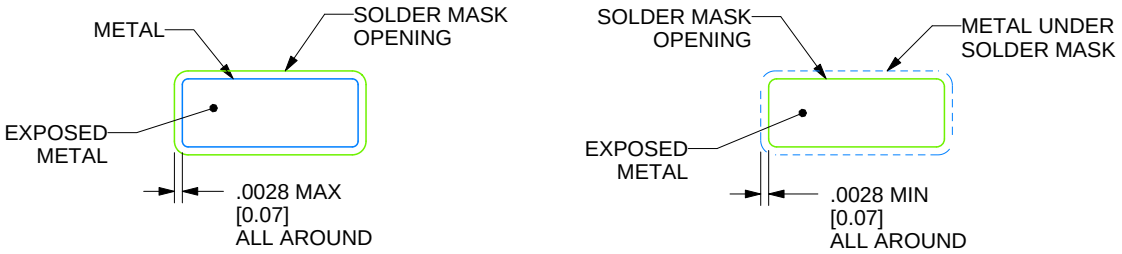

SOLDER MASK DETAILS

4214825/C 02/2019

NOTES: (continued)

6. Publication IPC-7351 may have alternate designs.
7. Solder mask tolerances between and around signal pads can vary based on board fabrication site.

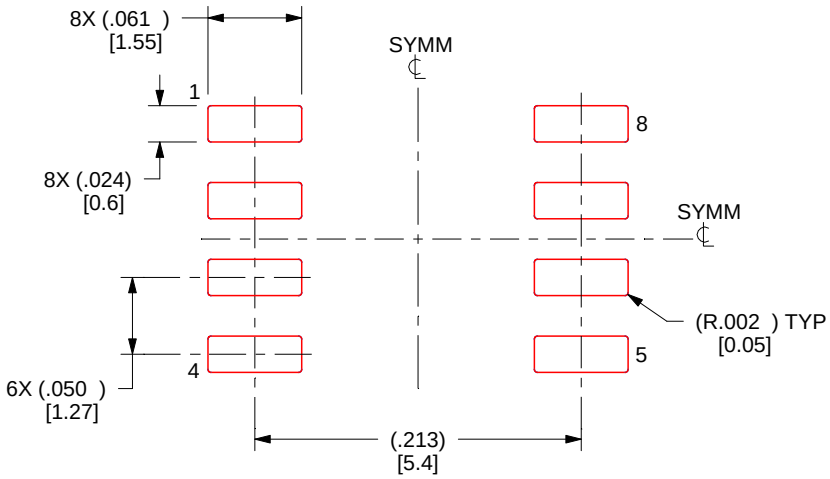

SOLDER PASTE EXAMPLE
BASED ON .005 INCH [0.125 MM] THICK STENCIL
SCALE:8X

4214825/C 02/2019

NOTES: (continued)

8. Laser cutting apertures with trapezoidal walls and rounded corners may offer better paste release. IPC-7525 may have alternate design recommendations.
9. Board assembly site may have different recommendations for stencil design.

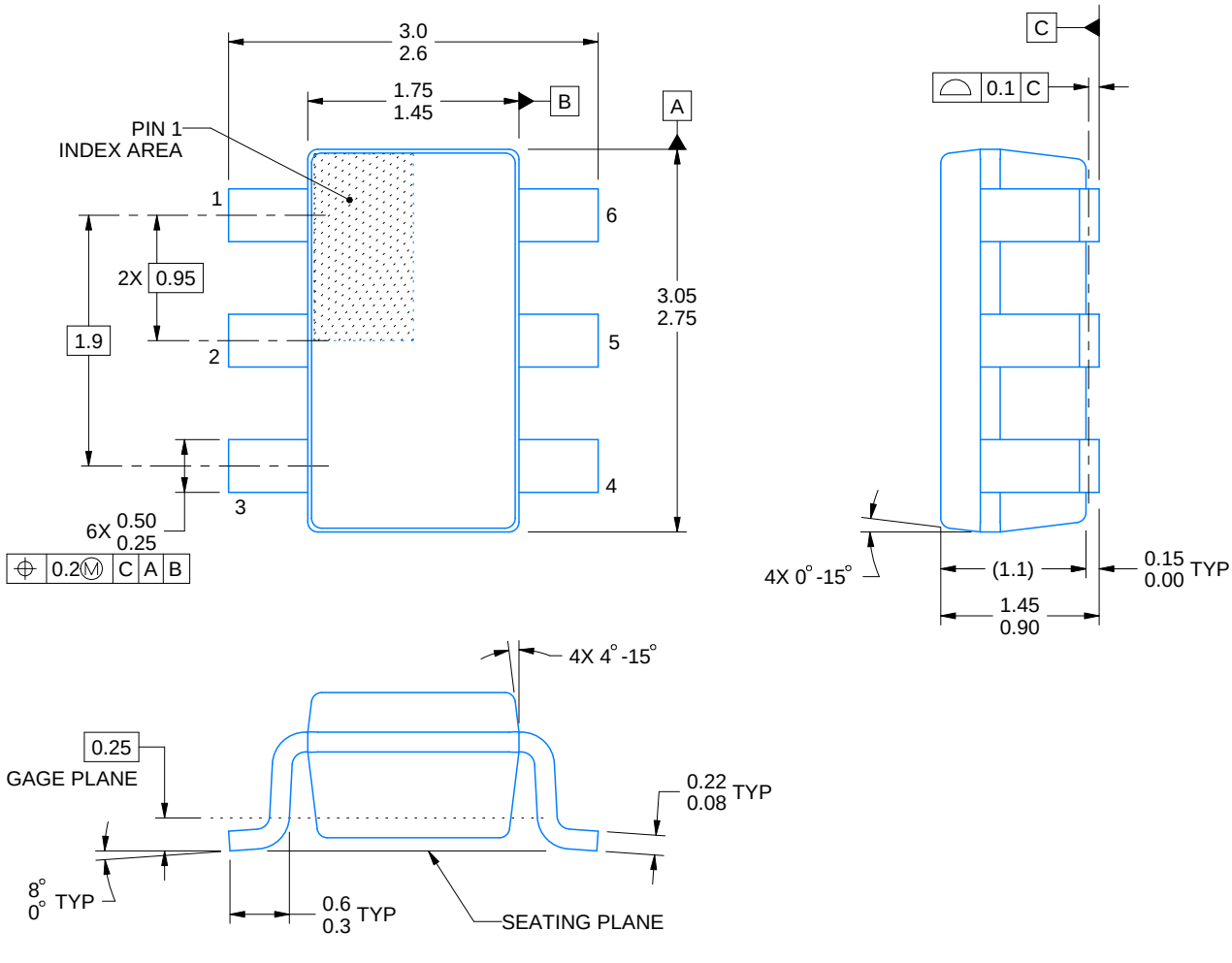

4214840/G 08/2024

NOTES:

1. All linear dimensions are in millimeters. Any dimensions in parenthesis are for reference only. Dimensioning and tolerancing per ASME Y14.5M.
2. This drawing is subject to change without notice.
3. Body dimensions do not include mold flash or protrusion. Mold flash and protrusion shall not exceed 0.25 per side.
4. Leads 1,2,3 may be wider than leads 4,5,6 for package orientation.
5. Refernce JEDEC MO-178.

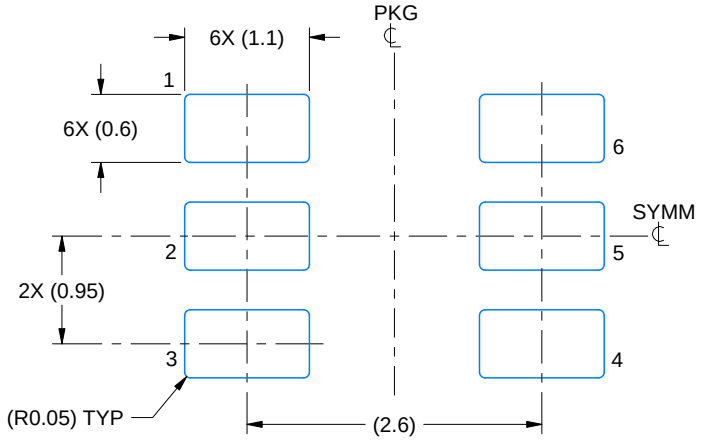

LAND PATTERN EXAMPLE
EXPOSED METAL SHOWN
SCALE:15X

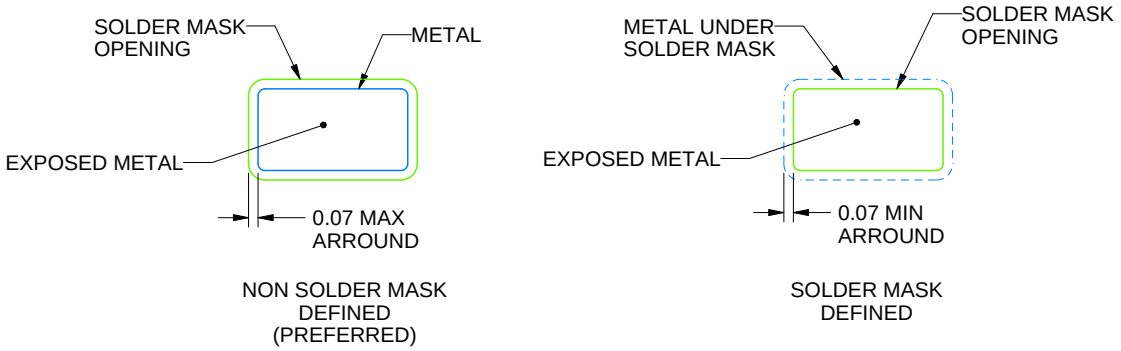

SOLDER MASK DETAILS

4214840/G 08/2024

NOTES: (continued)

6. Publication IPC-7351 may have alternate designs.
7. Solder mask tolerances between and around signal pads can vary based on board fabrication site.

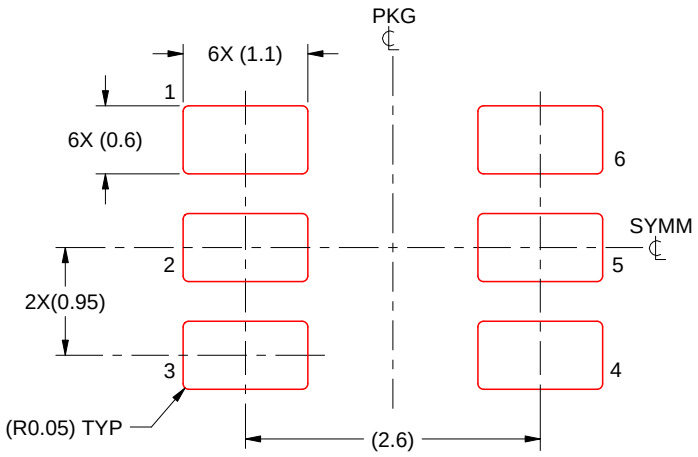

SOLDER PASTE EXAMPLE
BASED ON 0.125 mm THICK STENCIL
SCALE:15X

4214840/G 08/2024

NOTES: (continued)

8. Laser cutting apertures with trapezoidal walls and rounded corners may offer better paste release. IPC-7525 may have alternate design recommendations.
9. Board assembly site may have different recommendations for stencil design.

GENERIC PACKAGE VIEW

DSG 8

WSON - 0.8 mm max height

2 x 2, 0.5 mm pitch

PLASTIC SMALL OUTLINE - NO LEAD

This image is a representation of the package family, actual package may vary.
Refer to the product data sheet for package details.

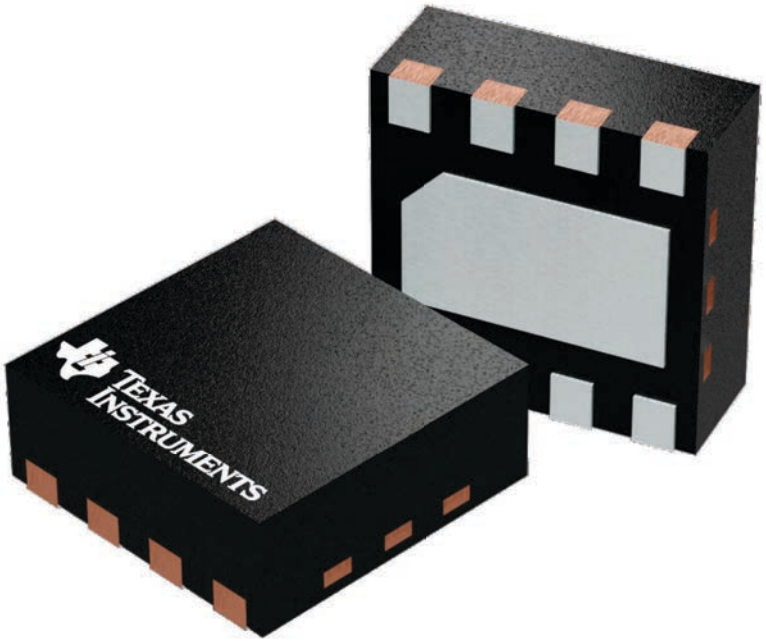

4224783/A

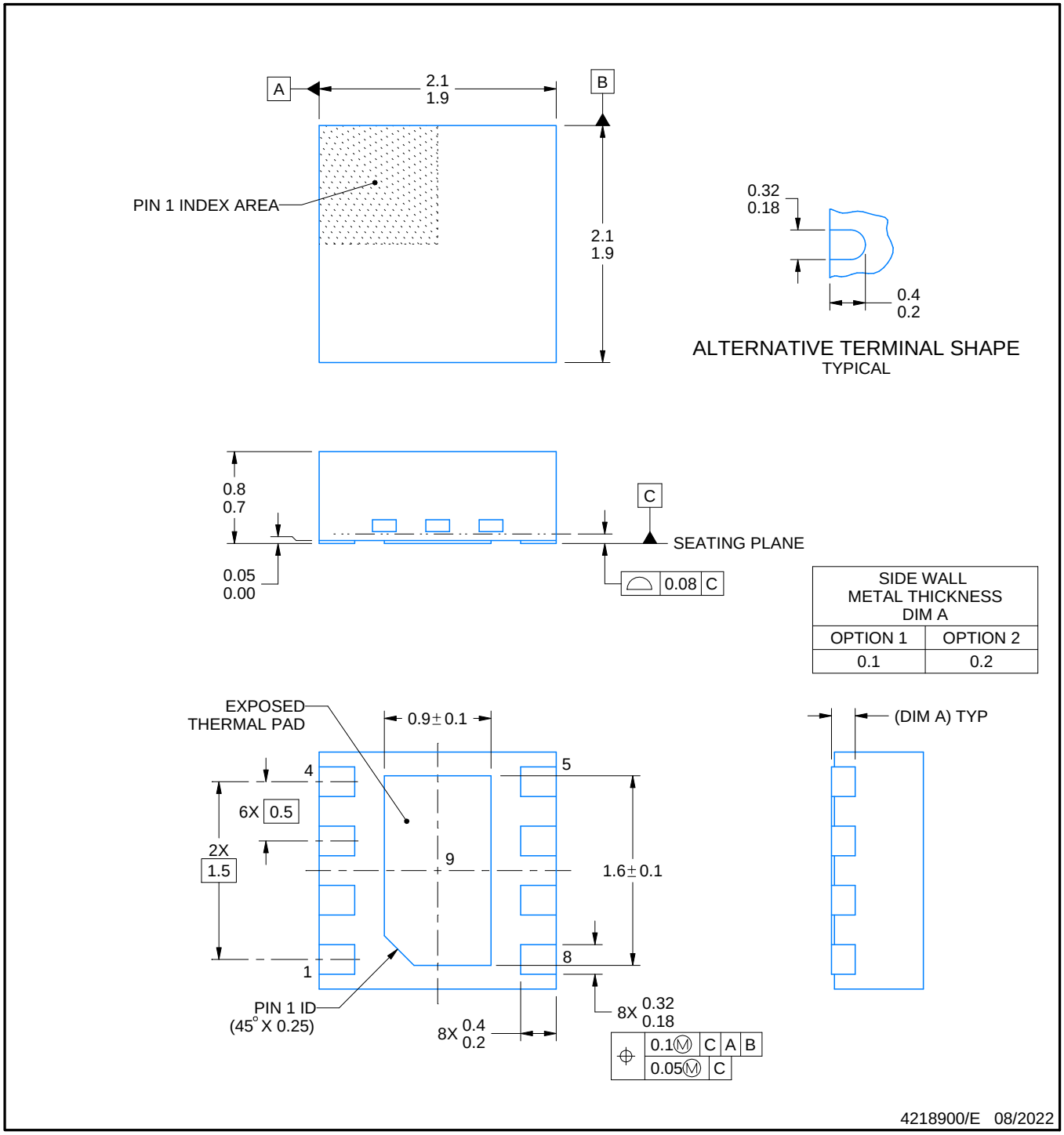

NOTES:

1. All linear dimensions are in millimeters. Any dimensions in parenthesis are for reference only. Dimensioning and tolerancing per ASME Y14.5M.
2. This drawing is subject to change without notice.
3. The package thermal pad must be soldered to the printed circuit board for thermal and mechanical performance.

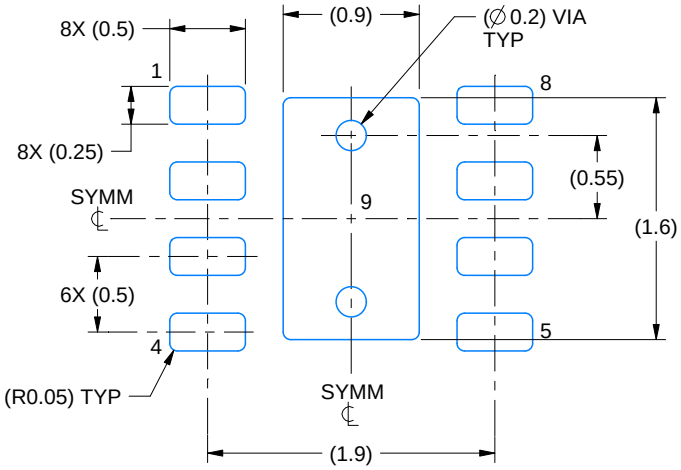

LAND PATTERN EXAMPLE
SCALE:20X

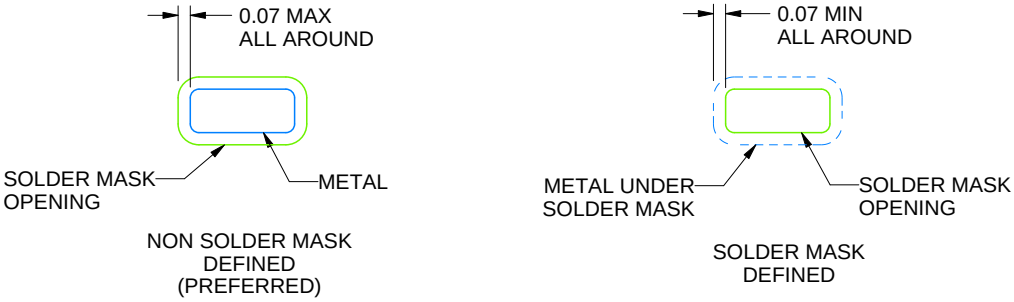

SOLDER MASK DETAILS

4218900/E 08/2022

NOTES: (continued)

4. This package is designed to be soldered to a thermal pad on the board. For more information, see Texas Instruments literature number SLUA271 (www.ti.com/lit/slua271).
5. Vias are optional depending on application, refer to device data sheet. If any vias are implemented, refer to their locations shown on this view. It is recommended that vias under paste be filled, plugged or tented.

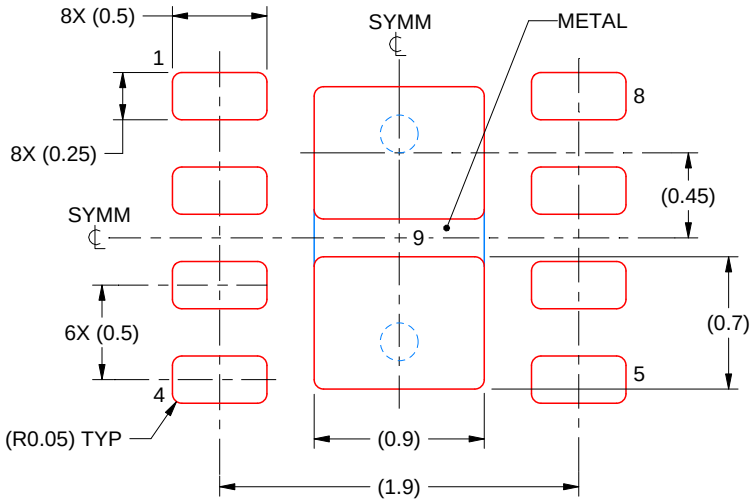

SOLDER PASTE EXAMPLE
BASED ON 0.125 mm THICK STENCIL

EXPOSED PAD 9:
87% PRINTED SOLDER COVERAGE BY AREA UNDER PACKAGE
SCALE:25X

4218900/E 08/2022

NOTES: (continued)

6. Laser cutting apertures with trapezoidal walls and rounded corners may offer better paste release. IPC-7525 may have alternate design recommendations.

PW0014A

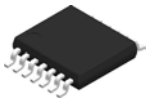

PACKAGE OUTLINE

TSSOP - 1.2 mm max height

SMALL OUTLINE PACKAGE

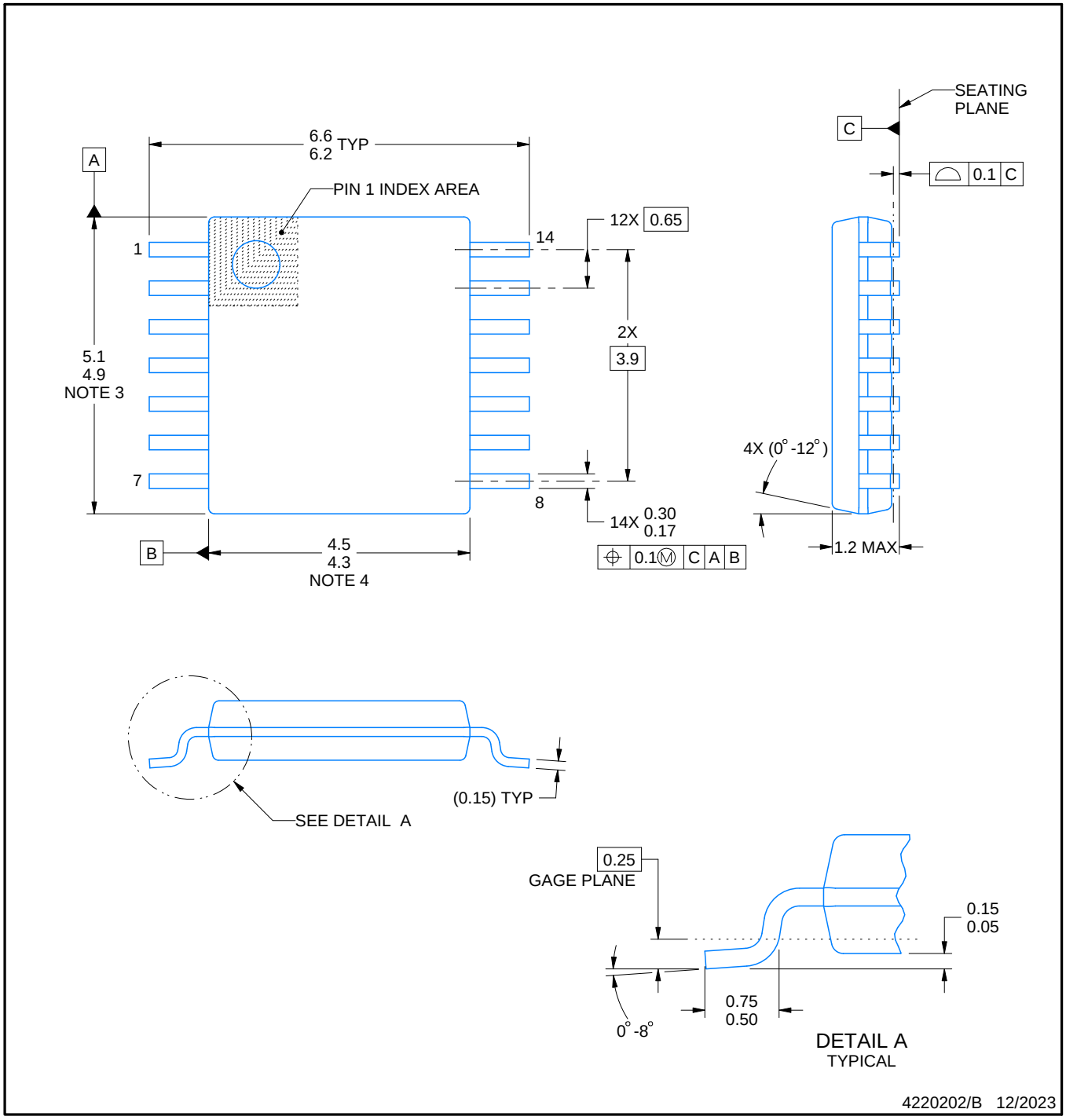

NOTES:

1. All linear dimensions are in millimeters. Any dimensions in parenthesis are for reference only. Dimensioning and tolerancing per ASME Y14.5M.
2. This drawing is subject to change without notice.
3. This dimension does not include mold flash, protrusions, or gate burrs. Mold flash, protrusions, or gate burrs shall not exceed 0.15 mm per side.
4. This dimension does not include interlead flash. Interlead flash shall not exceed 0.25 mm per side.
5. Reference JEDEC registration MO-153.

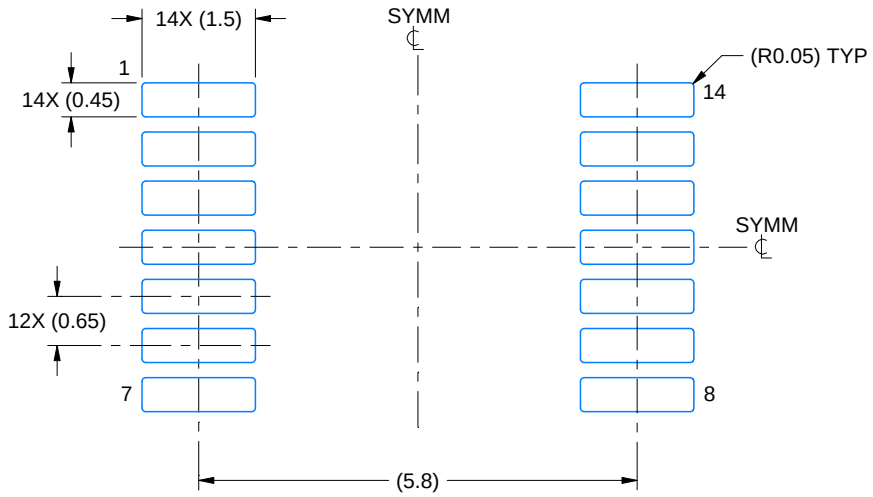

LAND PATTERN EXAMPLE
EXPOSED METAL SHOWN
SCALE: 10X

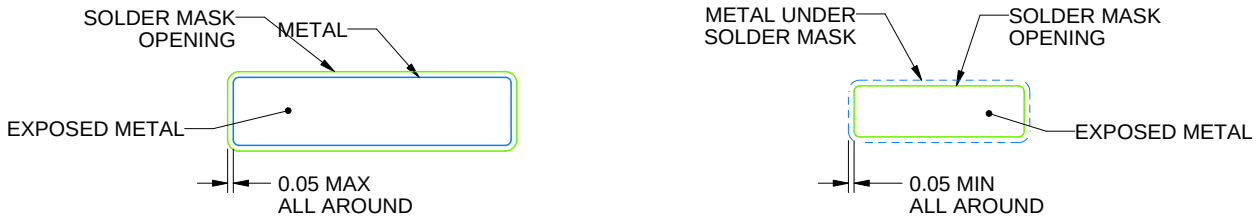

NON-SOLDER MASK DEFINED (PREFERRED)

SOLDER MASK DEFINED

SOLDER MASK DETAILS

4220202/B 12/2023

NOTES: (continued)

6. Publication IPC-7351 may have alternate designs.
7. Solder mask tolerances between and around signal pads can vary based on board fabrication site.

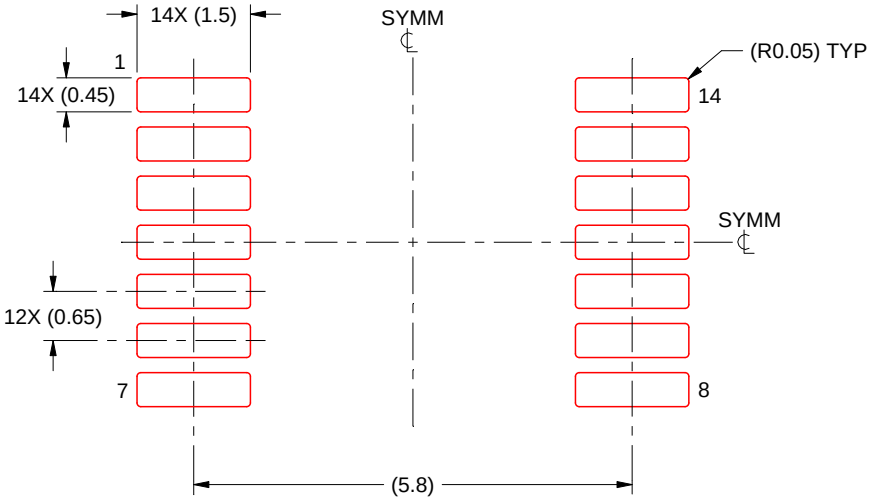

SOLDER PASTE EXAMPLE
BASED ON 0.125 mm THICK STENCIL
SCALE: 10X

4220202/B 12/2023

NOTES: (continued)

8. Laser cutting apertures with trapezoidal walls and rounded corners may offer better paste release. IPC-7525 may have alternate design recommendations.
9. Board assembly site may have different recommendations for stencil design.

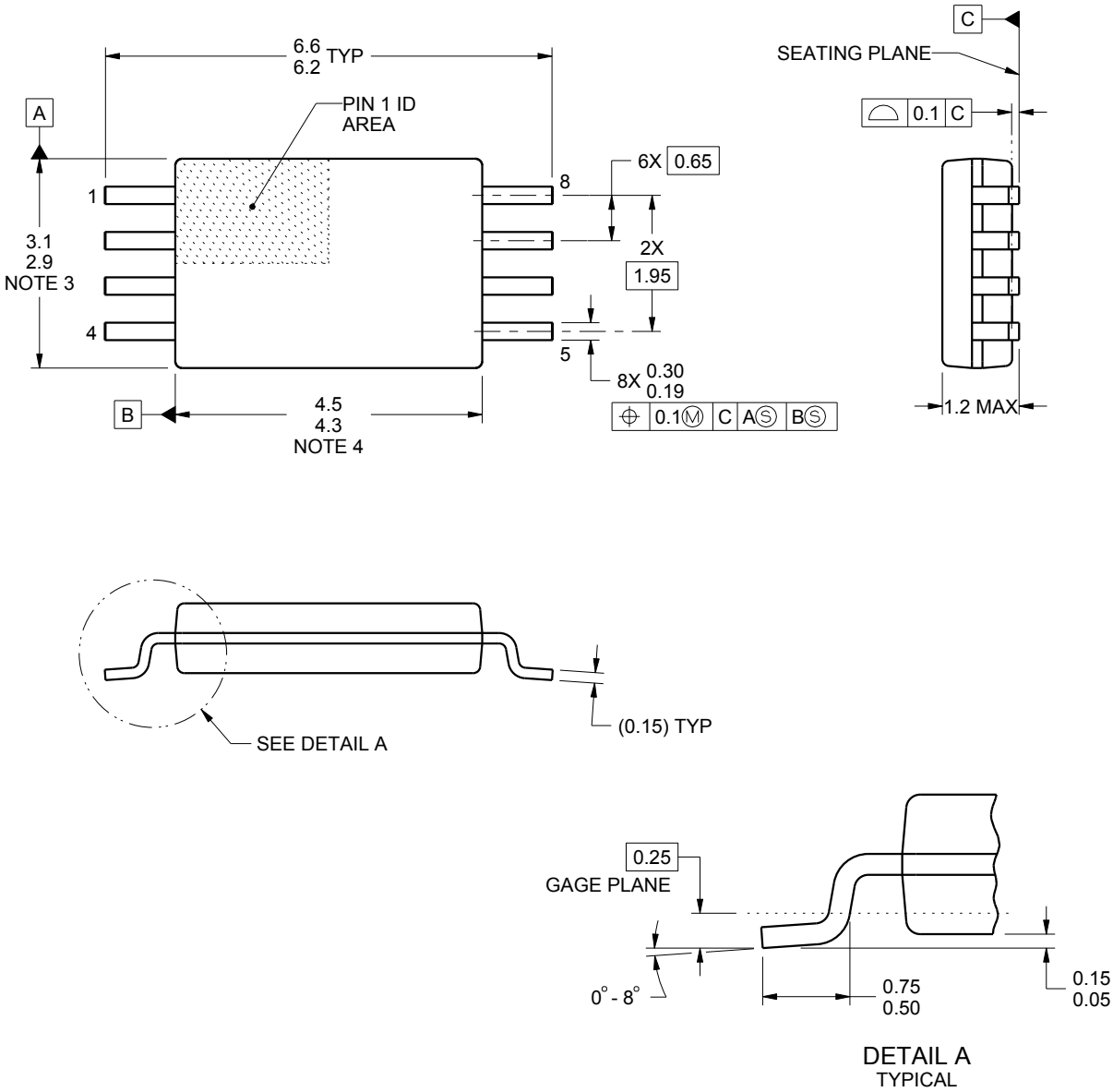

NOTES:

1. All linear dimensions are in millimeters. Any dimensions in parenthesis are for reference only. Dimensioning and tolerancing per ASME Y14.5M.
2. This drawing is subject to change without notice.
3. This dimension does not include mold flash, protrusions, or gate burrs. Mold flash, protrusions, or gate burrs shall not exceed 0.15 mm per side.
4. This dimension does not include interlead flash. Interlead flash shall not exceed 0.25 mm per side.
5. Reference JEDEC registration MO-153, variation AA.

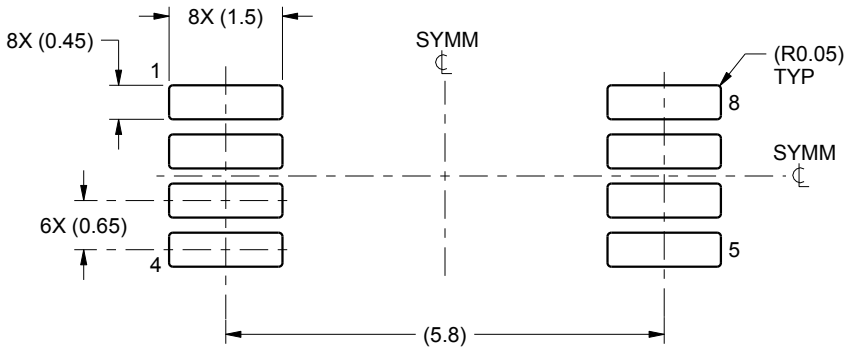

LAND PATTERN EXAMPLE
SCALE:10X

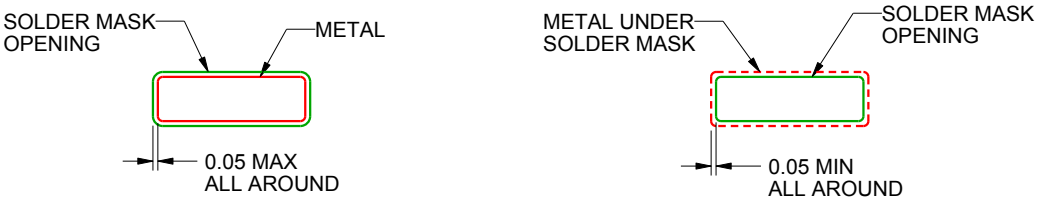

NON SOLDER MASK
DEFINED

SOLDER MASK
DEFINED

SOLDER MASK DETAILS
NOT TO SCALE

4221848/A 02/2015

NOTES: (continued)

6. Publication IPC-7351 may have alternate designs.
7. Solder mask tolerances between and around signal pads can vary based on board fabrication site.

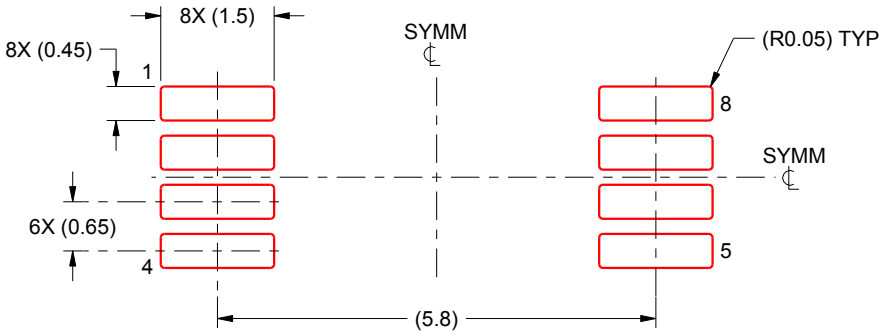

SOLDER PASTE EXAMPLE
BASED ON 0.125 mm THICK STENCIL
SCALE:10X

4221848/A 02/2015

NOTES: (continued)

8. Laser cutting apertures with trapezoidal walls and rounded corners may offer better paste release. IPC-7525 may have alternate design recommendations.
9. Board assembly site may have different recommendations for stencil design.

GENERIC PACKAGE VIEW

RUC 14

X2QFN - 0.4 mm max height

2 x 2, 0.4 mm pitch

PLASTIC QUAD FLATPACK - NO LEAD

This image is a representation of the package family, actual package may vary.
Refer to the product data sheet for package details.

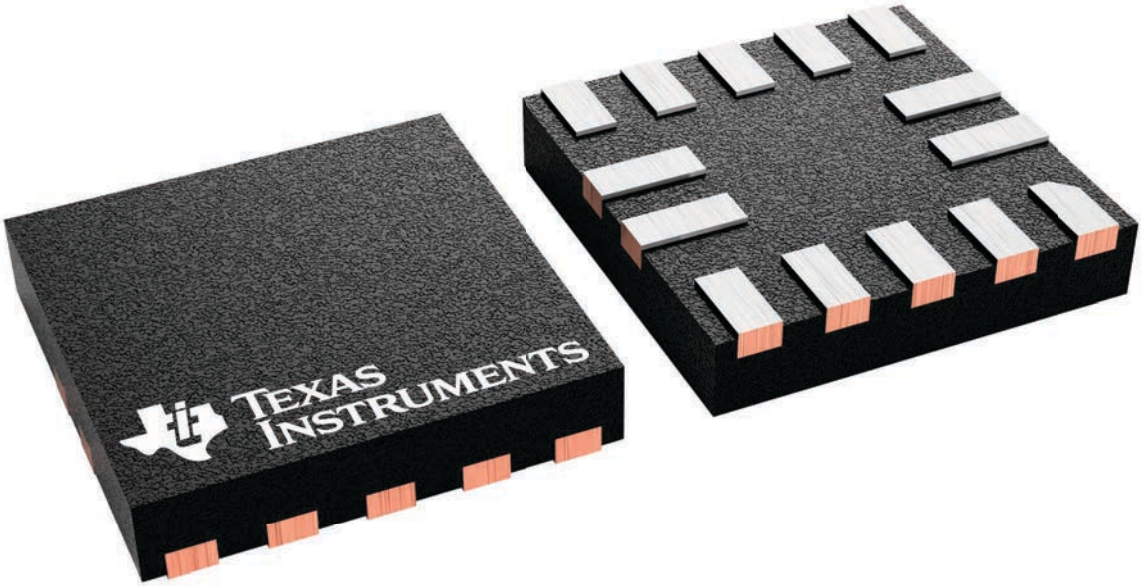

4229871/A

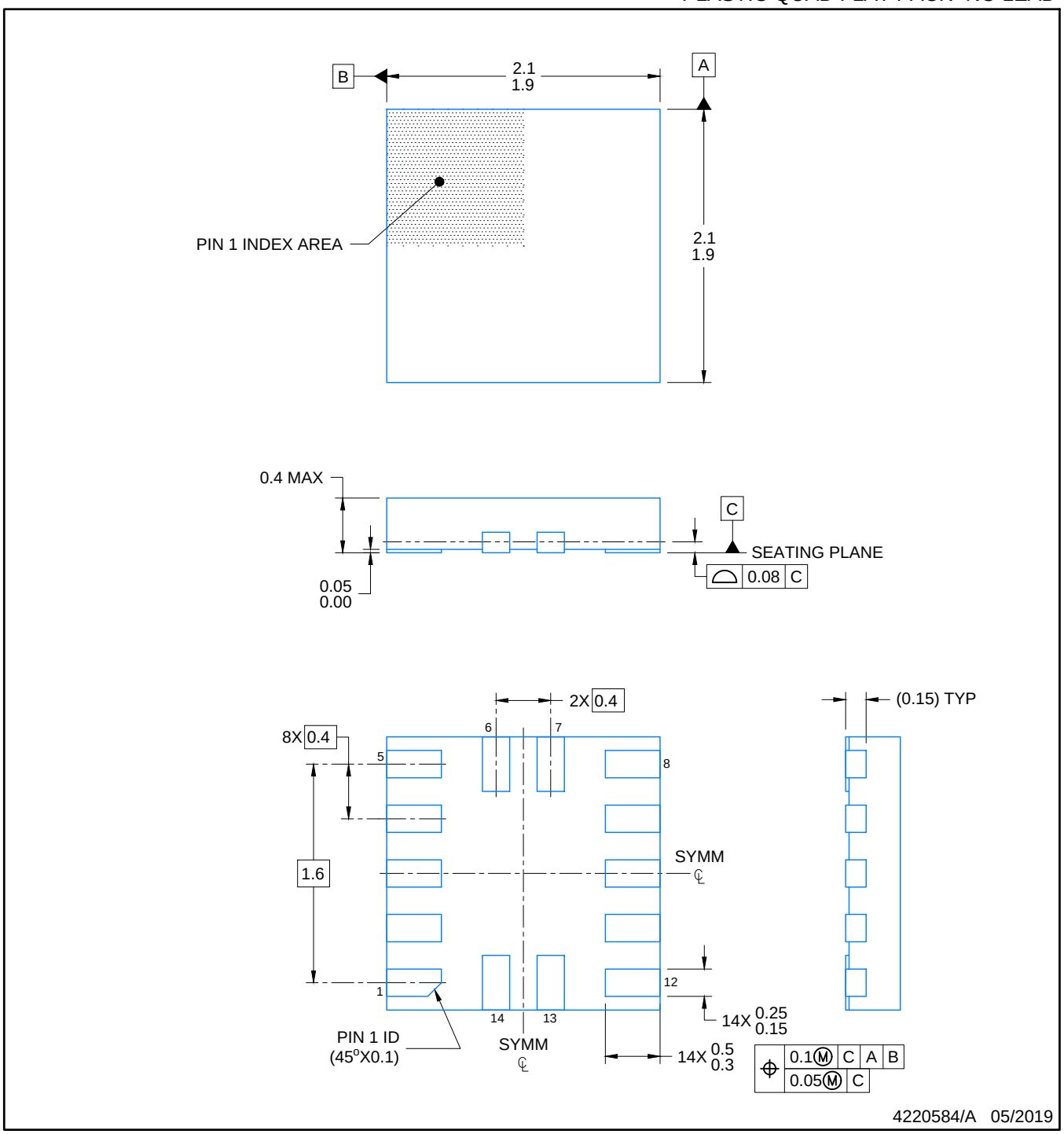

NOTES:

1. All linear dimensions are in millimeters. Any dimensions in parenthesis are for reference only. Dimensioning and tolerancing per ASME Y14.5M.
2. This drawing is subject to change without notice.

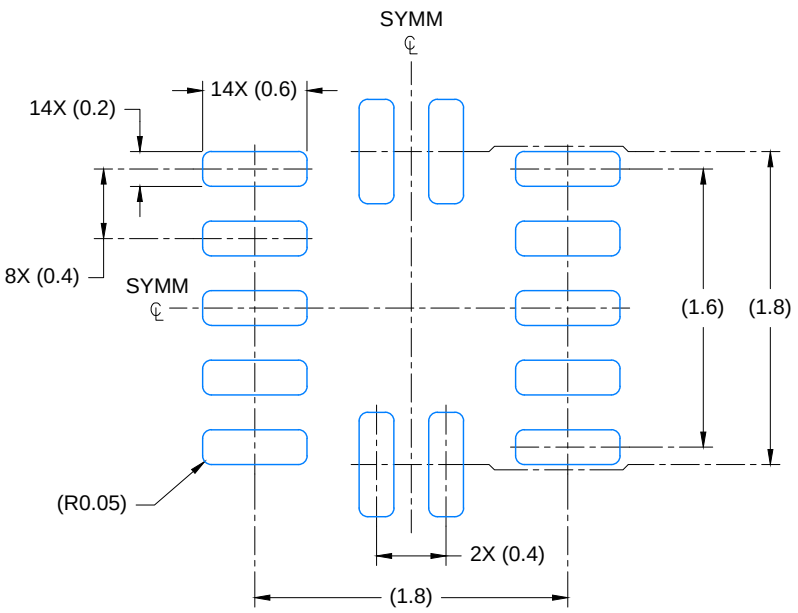

LAND PATTERN EXAMPLE
EXPOSED METAL SHOWN
SCALE: 23X

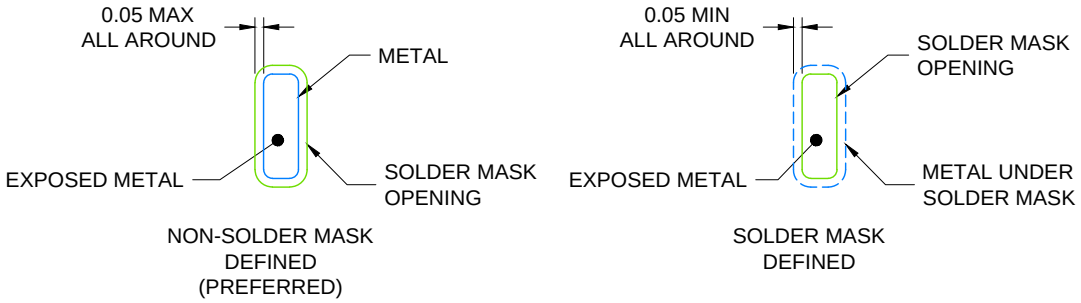

SOLDER MASK DETAILS

4220584/A 05/2019

NOTES: (continued)

3. For more information, see Texas Instruments literature number SLUA271 (www.ti.com/lit/slua271).

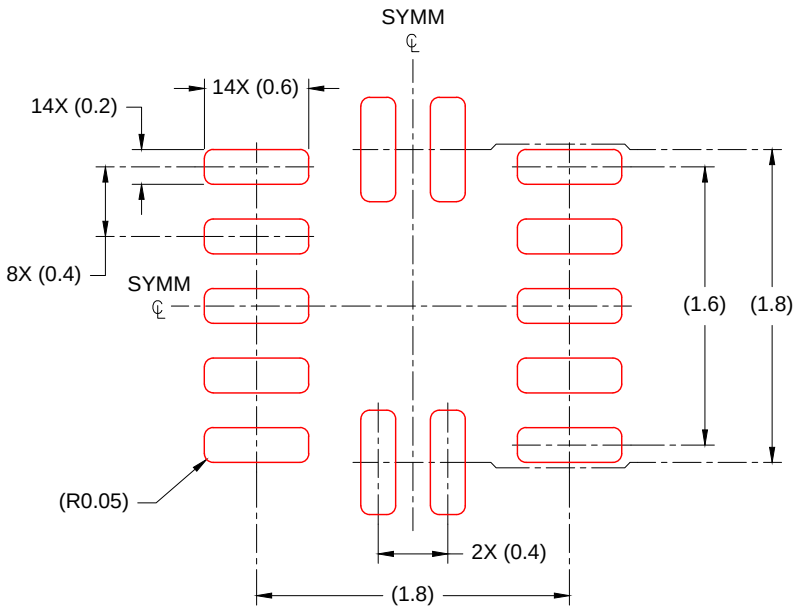

SOLDER PASTE EXAMPLE
BASED ON 0.100mm THICK STENCIL
SCALE: 23X

4220584/A 05/2019

NOTES: (continued)

4. Laser cutting apertures with trapezoidal walls and rounded corners may offer better paste release. IPC-7525 may have alternate design recommendations.

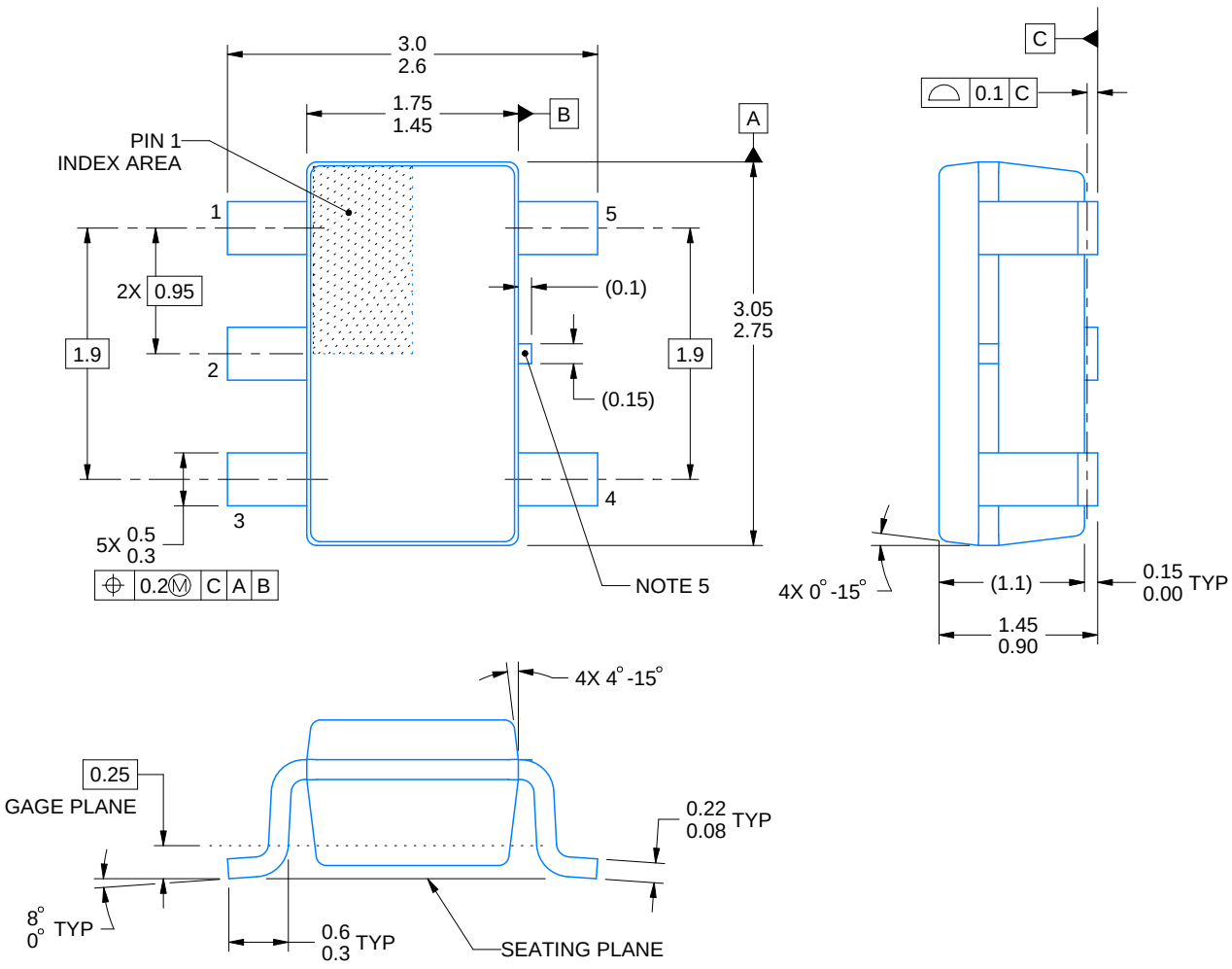

4214839/K 08/2024

NOTES:

1. All linear dimensions are in millimeters. Any dimensions in parenthesis are for reference only. Dimensioning and tolerancing per ASME Y14.5M.
2. This drawing is subject to change without notice.
3. Refernce JEDEC MO-178.
4. Body dimensions do not include mold flash, protrusions, or gate burrs. Mold flash, protrusions, or gate burrs shall not exceed 0.25 mm per side.
5. Support pin may differ or may not be present.

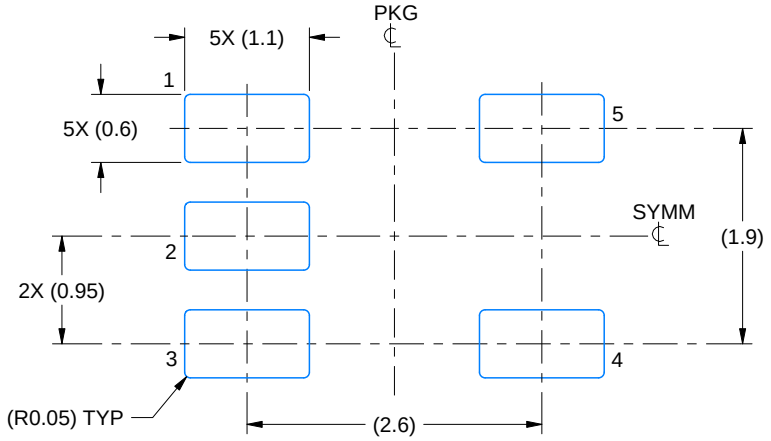

LAND PATTERN EXAMPLE
EXPOSED METAL SHOWN
SCALE:15X

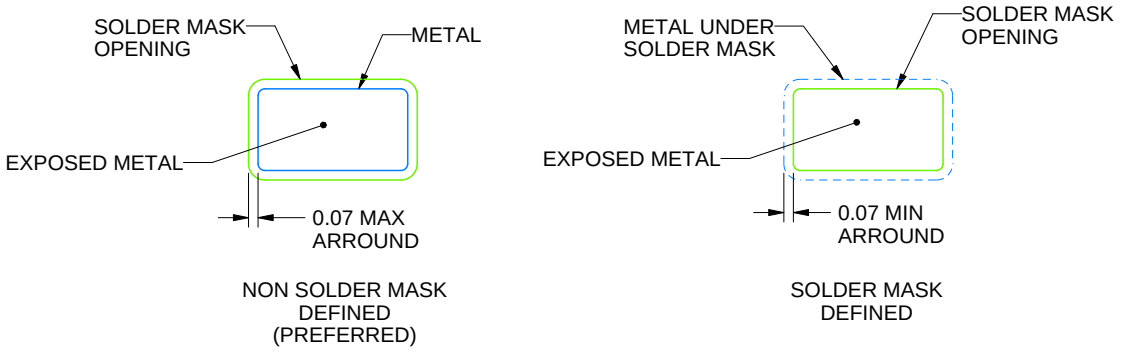

SOLDER MASK DETAILS

4214839/K 08/2024

NOTES: (continued)

6. Publication IPC-7351 may have alternate designs.
7. Solder mask tolerances between and around signal pads can vary based on board fabrication site.

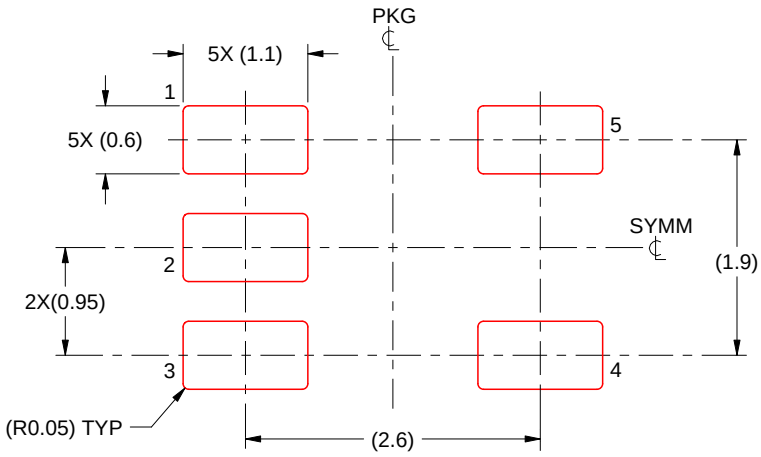

SOLDER PASTE EXAMPLE
BASED ON 0.125 mm THICK STENCIL
SCALE:15X

4214839/K 08/2024

NOTES: (continued)

8. Laser cutting apertures with trapezoidal walls and rounded corners may offer better paste release. IPC-7525 may have alternate design recommendations.
9. Board assembly site may have different recommendations for stencil design.

PACKAGE OUTLINE

DGK0008A

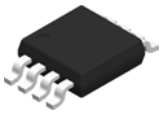

VSSOP - 1.1 mm max height

SMALL OUTLINE PACKAGE

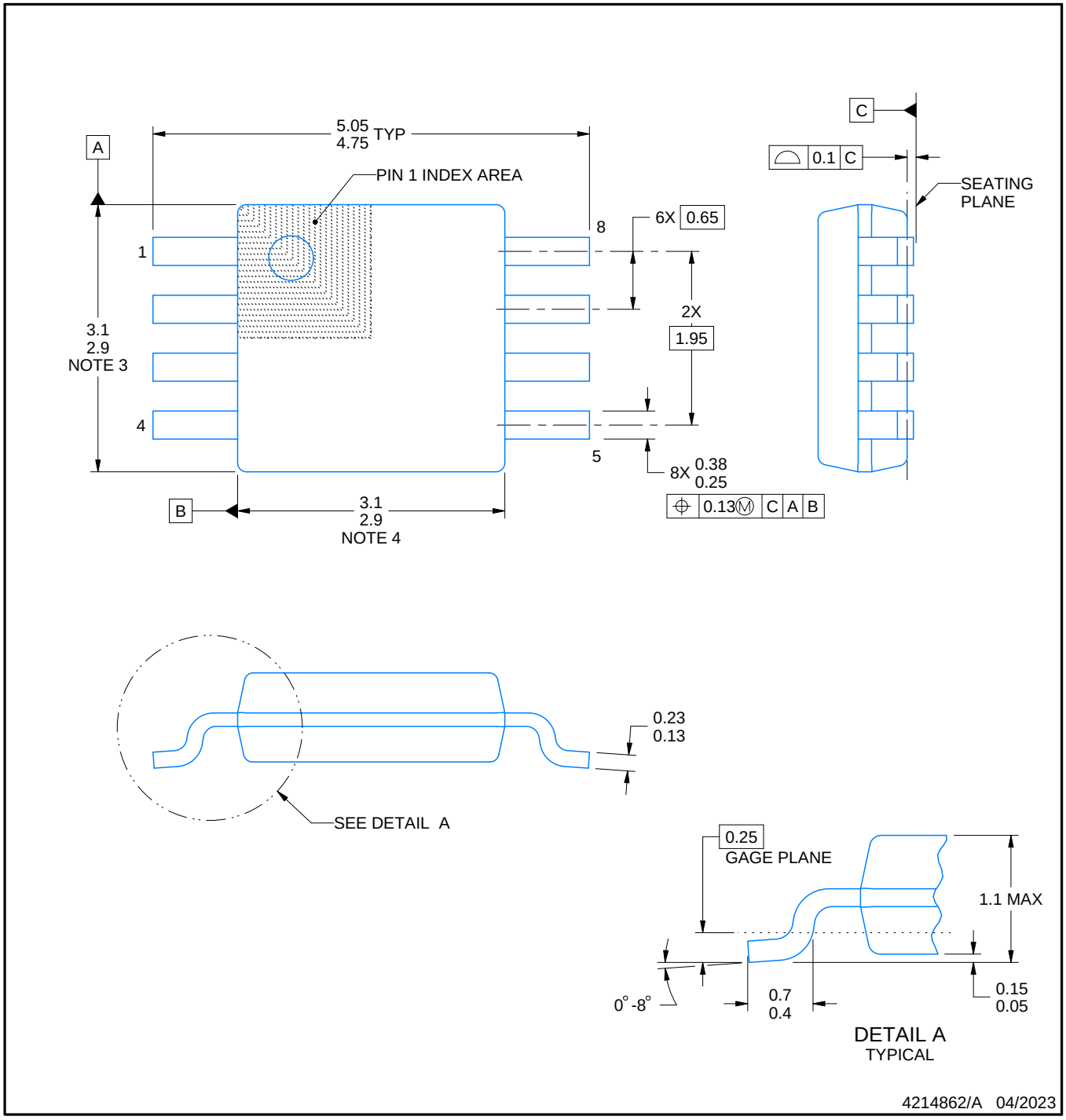

PowerPAD is a trademark of Texas Instruments.

NOTES:

1. All linear dimensions are in millimeters. Any dimensions in parenthesis are for reference only. Dimensioning and tolerancing per ASME Y14.5M.
2. This drawing is subject to change without notice.
3. This dimension does not include mold flash, protrusions, or gate burrs. Mold flash, protrusions, or gate burrs shall not exceed 0.15 mm per side.
4. This dimension does not include interlead flash. Interlead flash shall not exceed 0.25 mm per side.
5. Reference JEDEC registration MO-187.

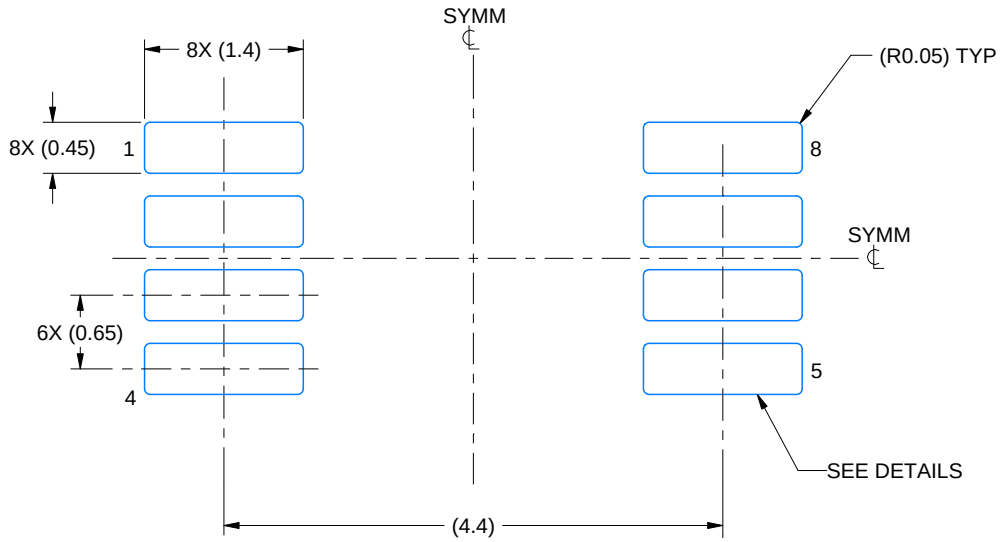

LAND PATTERN EXAMPLE
EXPOSED METAL SHOWN
SCALE: 15X

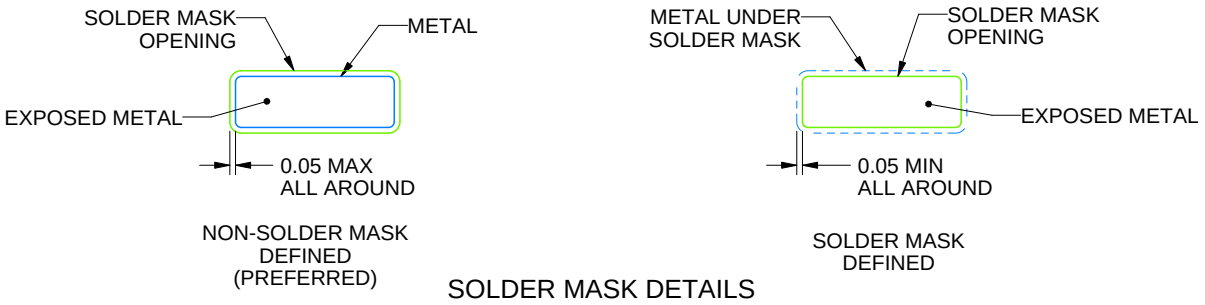

SOLDER MASK DETAILS

4214862/A 04/2023

NOTES: (continued)

6. Publication IPC-7351 may have alternate designs.
7. Solder mask tolerances between and around signal pads can vary based on board fabrication site.
8. Vias are optional depending on application, refer to device data sheet. If any vias are implemented, refer to their locations shown on this view. It is recommended that vias under paste be filled, plugged or tented.
9. Size of metal pad may vary due to creepage requirement.

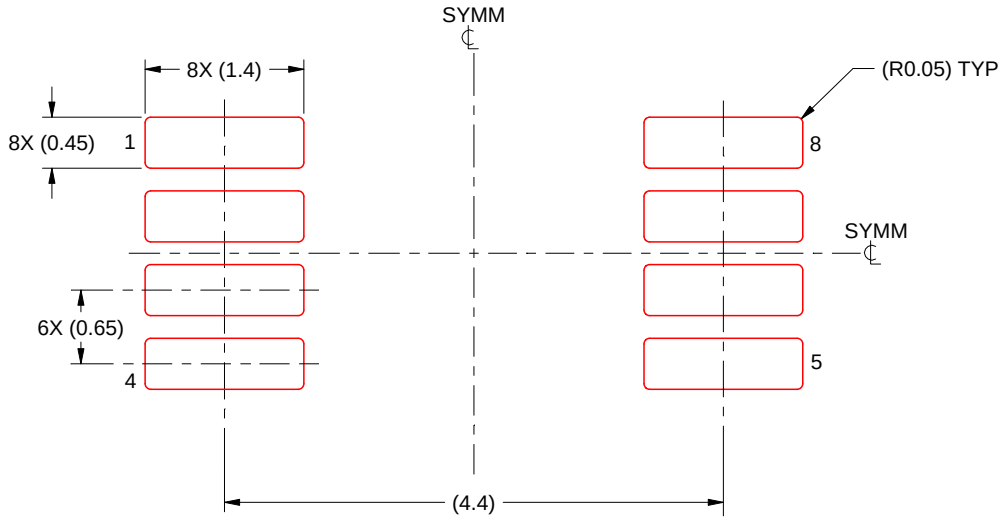

SOLDER PASTE EXAMPLE
SCALE: 15X

4214862/A 04/2023

NOTES: (continued)

11. Laser cutting apertures with trapezoidal walls and rounded corners may offer better paste release. IPC-7525 may have alternate design recommendations.
12. Board assembly site may have different recommendations for stencil design.

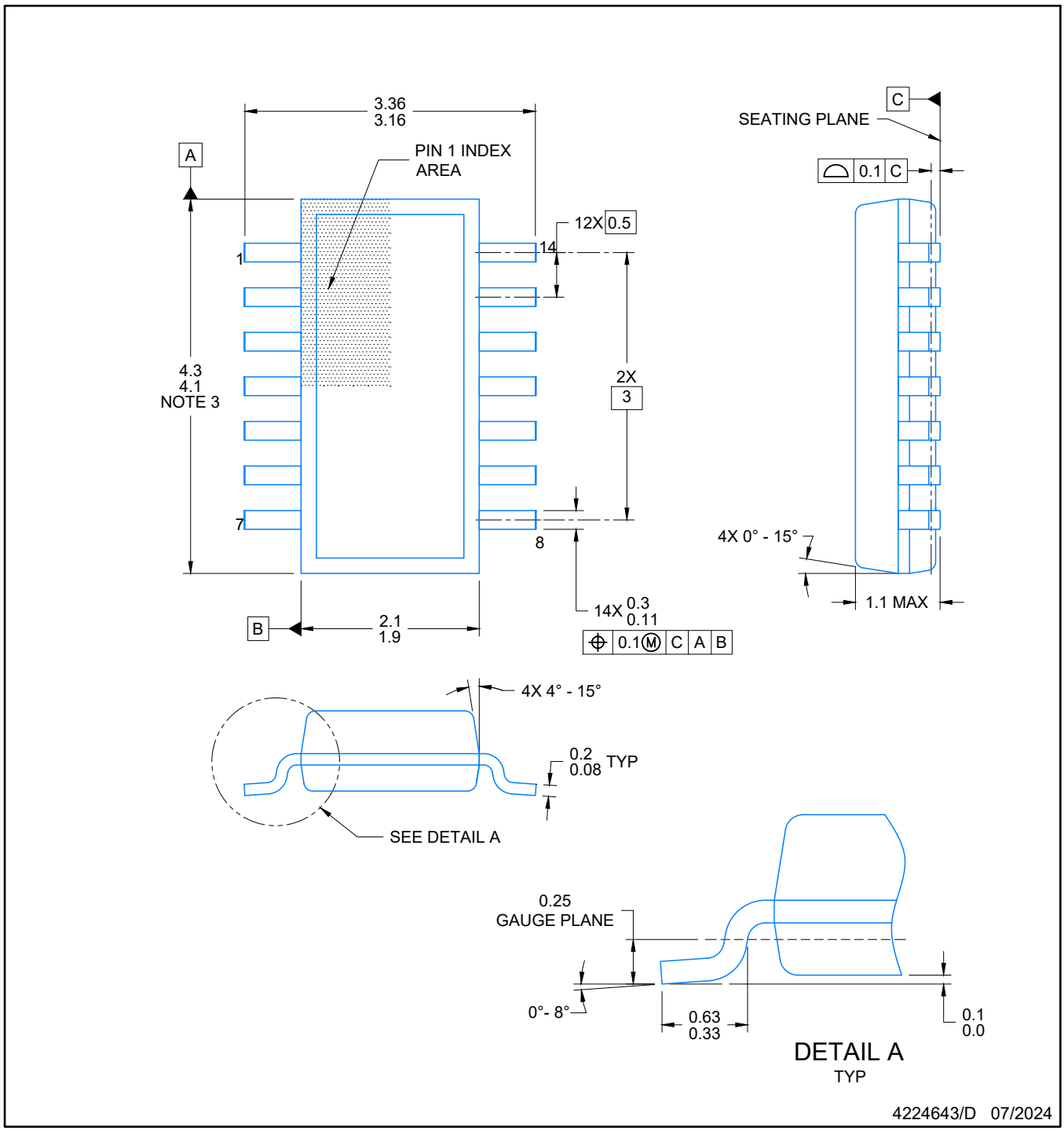

NOTES:

1. All linear dimensions are in millimeters. Any dimensions in parenthesis are for reference only. Dimensioning and tolerancing per ASME Y14.5M.
2. This drawing is subject to change without notice.
3. This dimension does not include mold flash, protrusions, or gate burrs. Mold flash, protrusions, or gate burrs shall not exceed 0.15 per side.
4. This dimension does not include interlead flash. Interlead flash shall not exceed 0.50 per side.
5. Reference JEDEC Registration MO-345, Variation AB

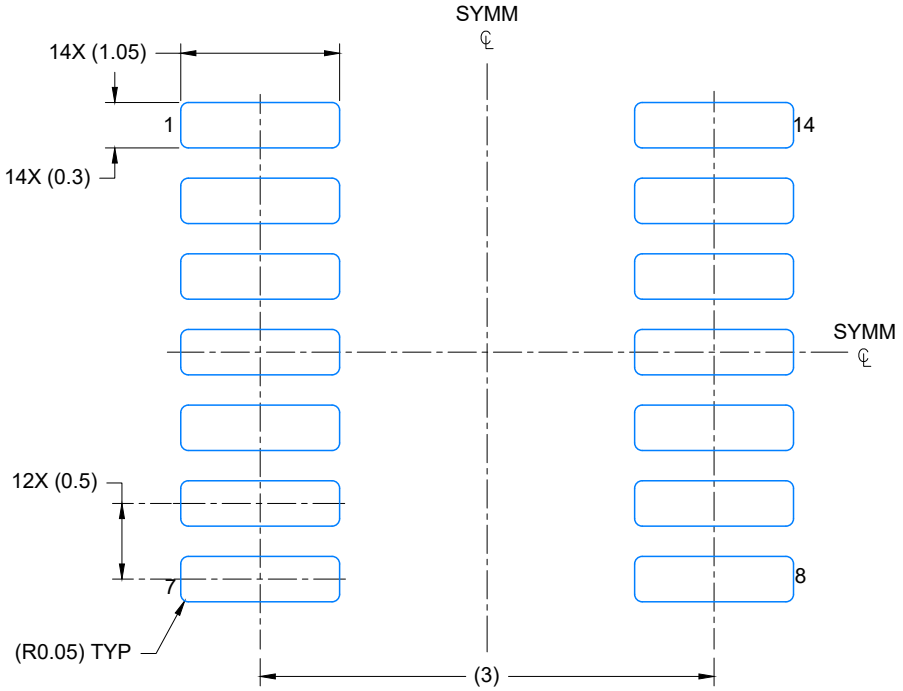

LAND PATTERN EXAMPLE
EXPOSED METAL SHOWN
SCALE: 20X

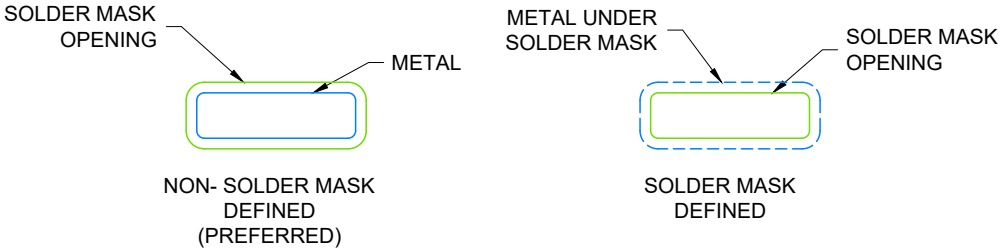

SOLDER MASK DETAILS

4224643/D 07/2024

NOTES: (continued)

6. Publication IPC-7351 may have alternate designs.
7. Solder mask tolerances between and around signal pads can vary based on board fabrication site.

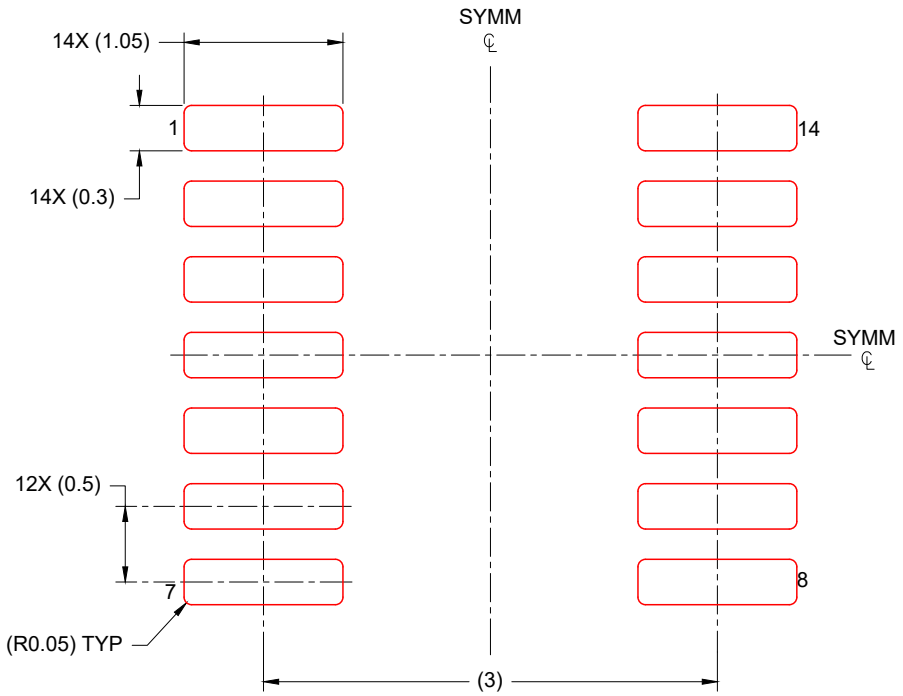

SOLDER PASTE EXAMPLE
BASED ON 0.125 mm THICK STENCIL
SCALE: 20X

4224643/D 07/2024

NOTES: (continued)

8. Laser cutting apertures with trapezoidal walls and rounded corners may offer better paste release. IPC-7525 may have alternate design recommendations.
9. Board assembly site may have different recommendations for stencil design.

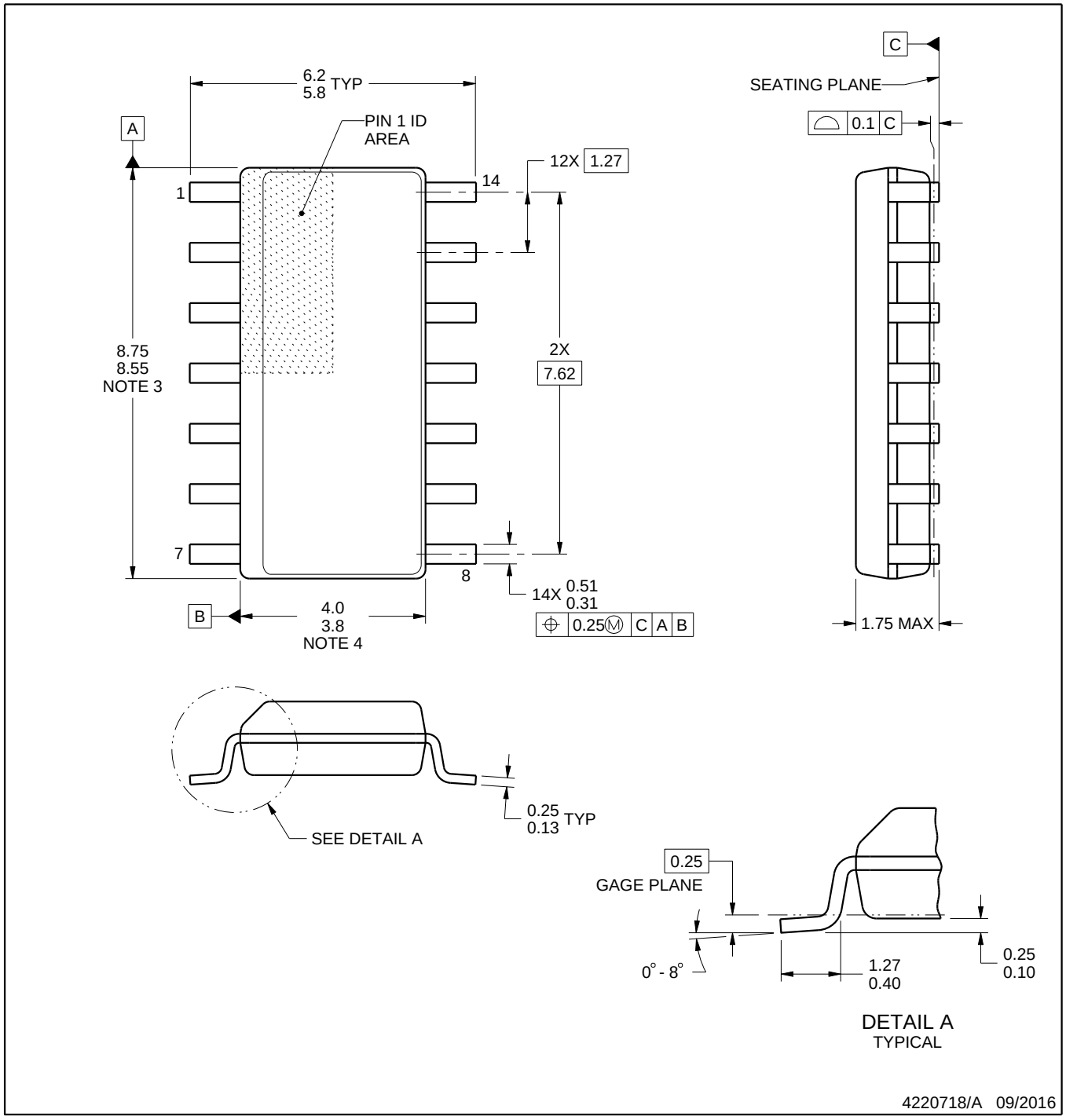

NOTES:

1. All linear dimensions are in millimeters. Dimensions in parenthesis are for reference only. Dimensioning and tolerancing per ASME Y14.5M.
2. This drawing is subject to change without notice.
3. This dimension does not include mold flash, protrusions, or gate burrs. Mold flash, protrusions, or gate burrs shall not exceed 0.15 mm, per side.
4. This dimension does not include interlead flash. Interlead flash shall not exceed 0.43 mm, per side.
5. Reference JEDEC registration MS-012, variation AB.

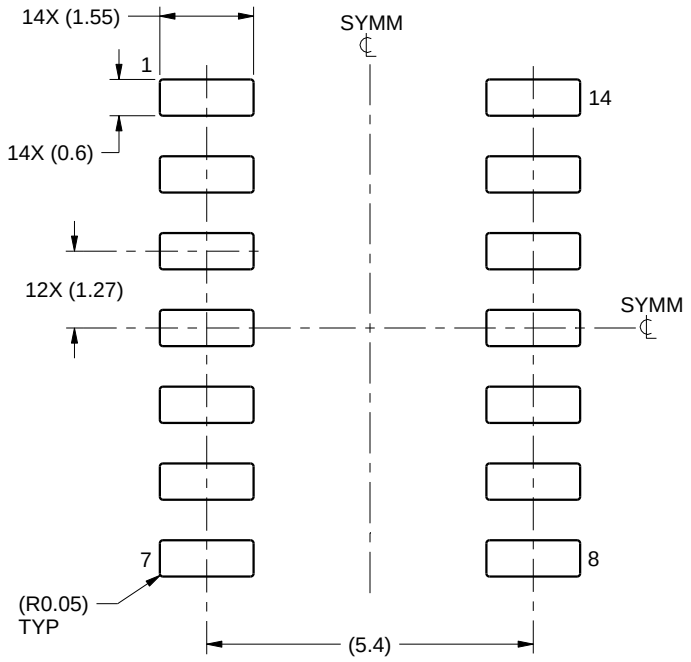

LAND PATTERN EXAMPLE
SCALE:8X

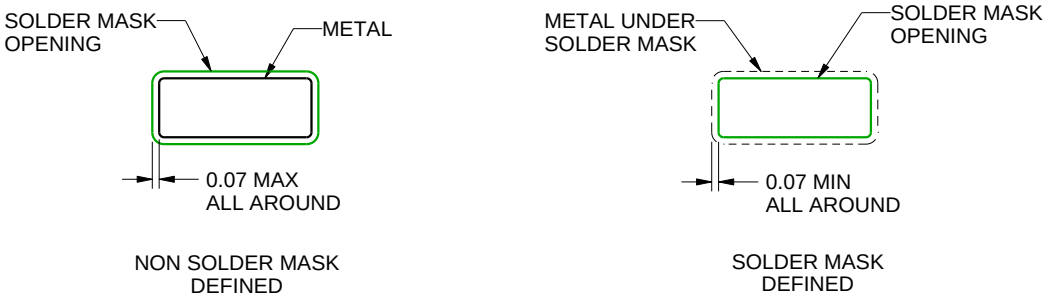

SOLDER MASK DETAILS

4220718/A 09/2016

NOTES: (continued)

6. Publication IPC-7351 may have alternate designs.
7. Solder mask tolerances between and around signal pads can vary based on board fabrication site.

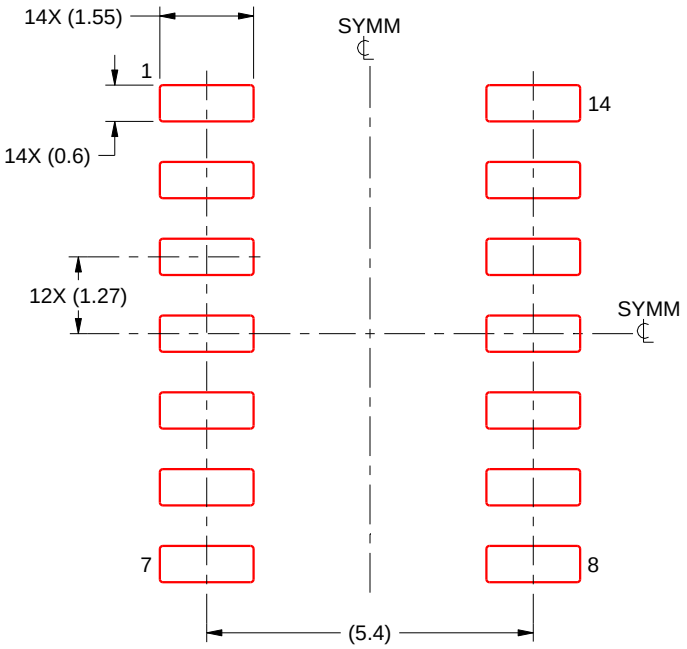

SOLDER PASTE EXAMPLE
BASED ON 0.125 mm THICK STENCIL
SCALE:8X

4220718/A 09/2016

NOTES: (continued)

8. Laser cutting apertures with trapezoidal walls and rounded corners may offer better paste release. IPC-7525 may have alternate design recommendations.
9. Board assembly site may have different recommendations for stencil design.

GENERIC PACKAGE VIEW

RUG 10

X2QFN - 0.4 mm max height

1.5 x 2, 0.5 mm pitch

PLASTIC QUAD FLATPACK - NO LEAD

This image is a representation of the package family, actual package may vary.
Refer to the product data sheet for package details.

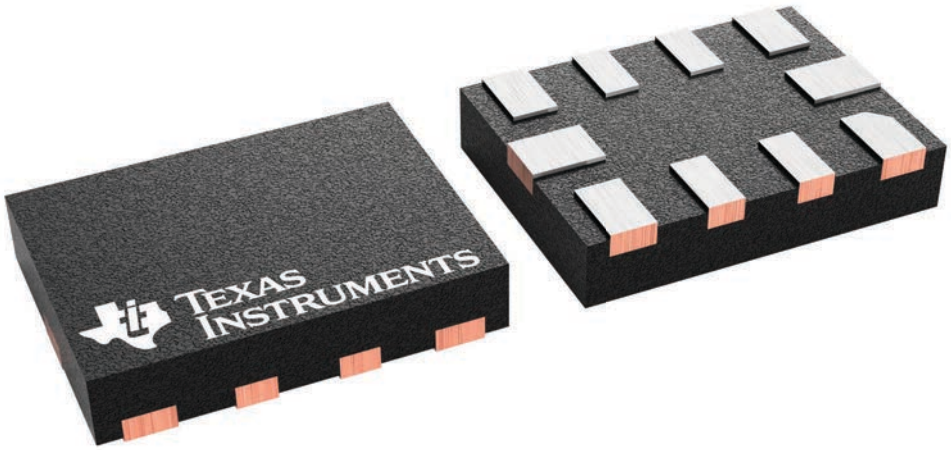

4231768/A

PACKAGE OUTLINE

RUG0010A

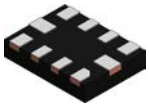

X2QFN - 0.4 mm max height

PLASTIC QUAD FLATPACK - NO LEAD

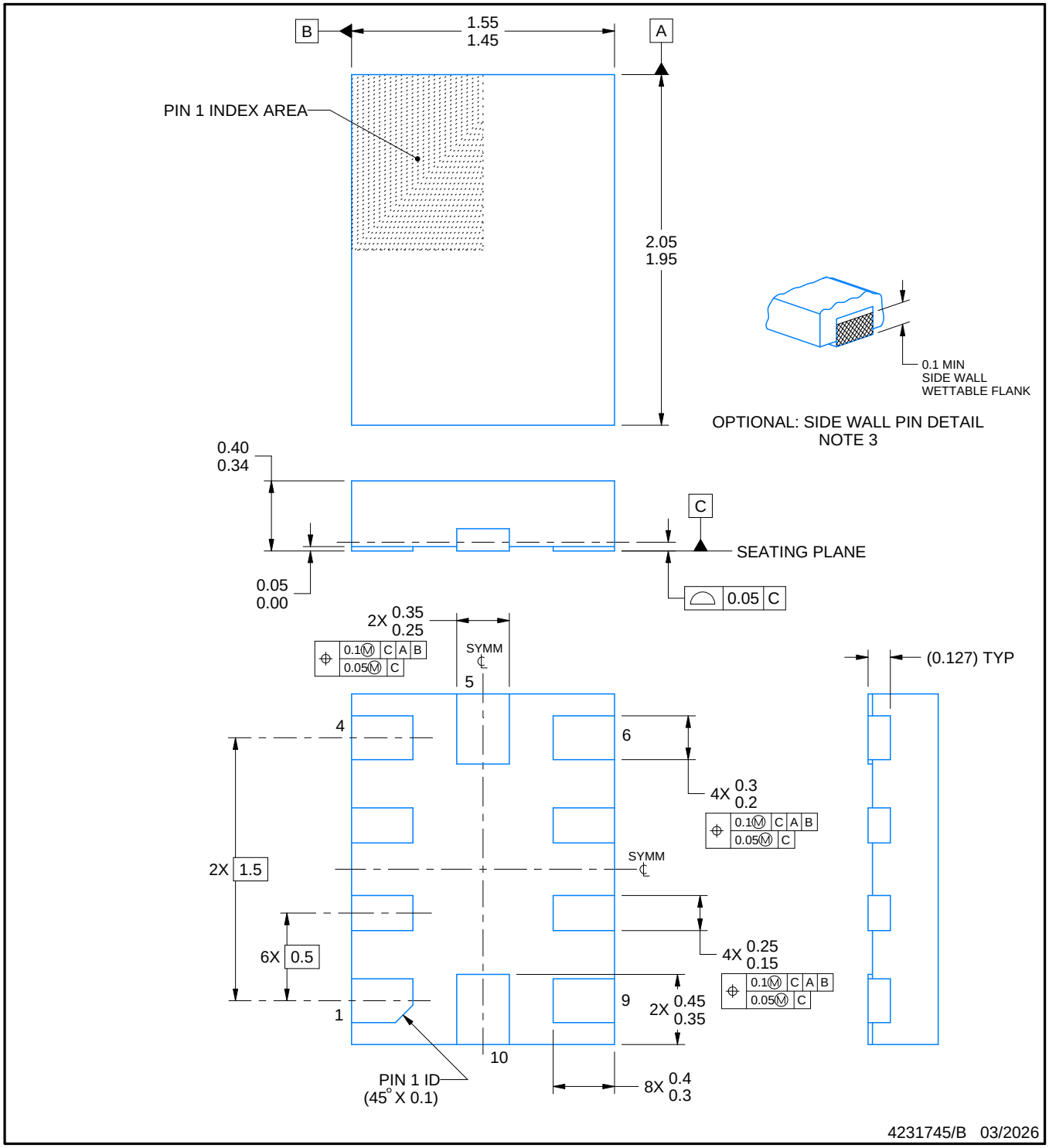

NOTES:

1. All linear dimensions are in millimeters. Any dimensions in parenthesis are for reference only. Dimensioning and tolerancing per ASME Y14.5M.
2. This drawing is subject to change without notice.
3. Minimum 0.1 mm solder wetting on pin side wall. Available for wettable flank version only.

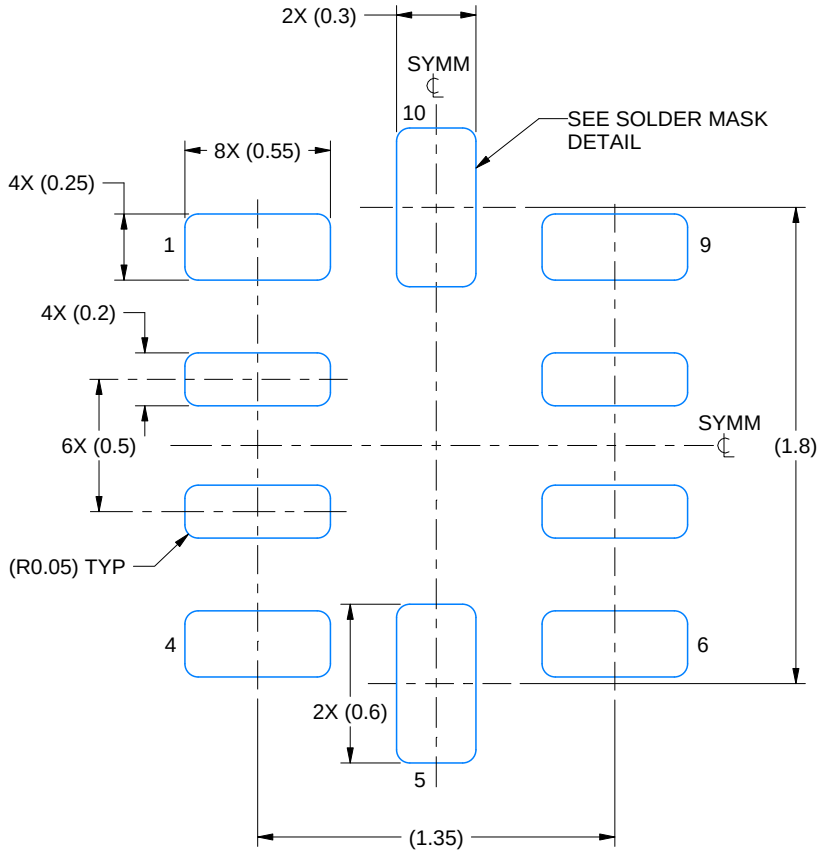

LAND PATTERN EXAMPLE
EXPOSED METAL SHOWN
SCALE: 35X

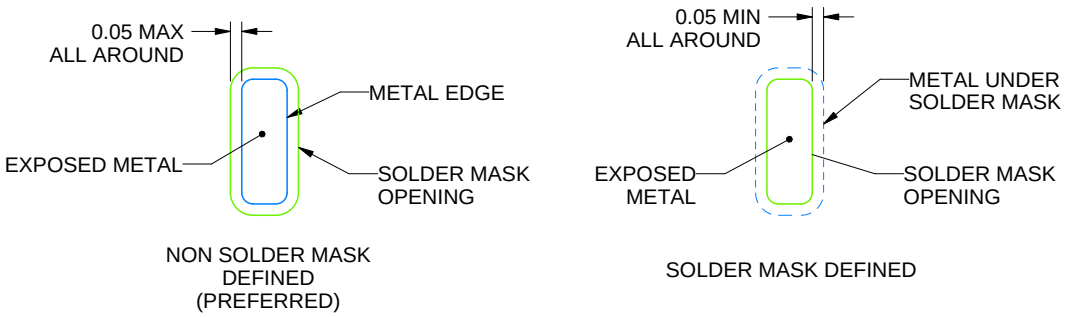

SOLDER MASK DETAILS

4231745/B 03/2026

NOTES: (continued)

3. For more information, see Texas Instruments literature number SLUA271 (www.ti.com/lit/slua271).

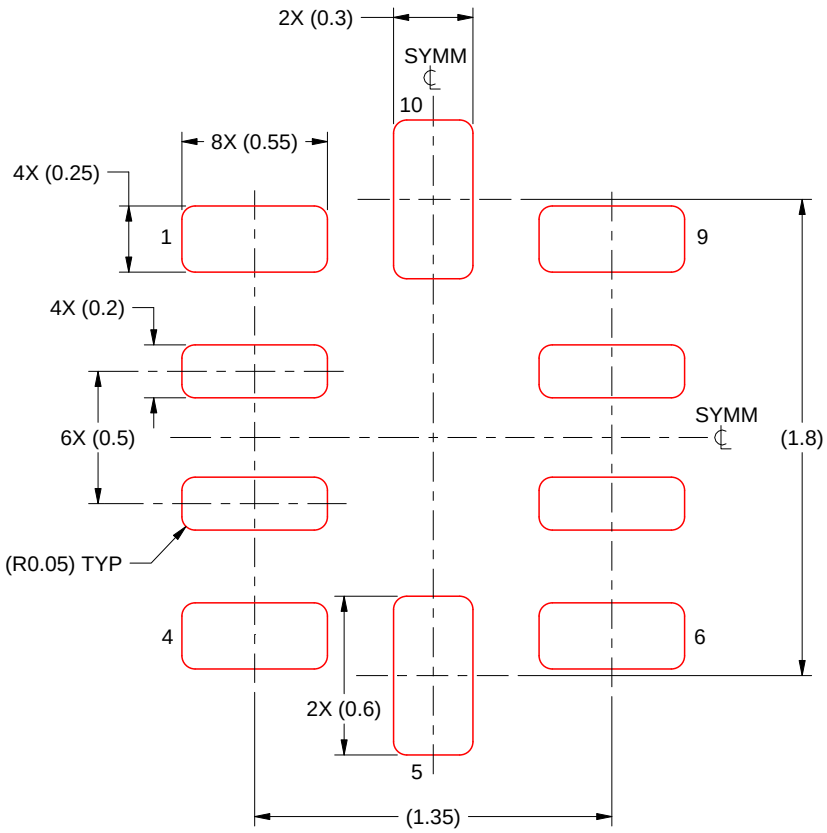

SOLDER PASTE EXAMPLE
BASED ON 0.125 MM THICK STENCIL
SCALE: 35X

4231745/B 03/2026

NOTES: (continued)

4. Laser cutting apertures with trapezoidal walls and rounded corners may offer better paste release. IPC-7525 may have alternate design recommendations.

IMPORTANT NOTICE AND DISCLAIMER

TI PROVIDES TECHNICAL AND RELIABILITY DATA (INCLUDING DATASHEETS), DESIGN RESOURCES (INCLUDING REFERENCE DESIGNS), APPLICATION OR OTHER DESIGN ADVICE, WEB TOOLS, SAFETY INFORMATION, AND OTHER RESOURCES “AS IS” AND WITH ALL FAULTS, AND DISCLAIMS ALL WARRANTIES, EXPRESS AND IMPLIED, INCLUDING WITHOUT LIMITATION ANY IMPLIED WARRANTIES OF MERCHANTABILITY, FITNESS FOR A PARTICULAR PURPOSE OR NON-INFRINGEMENT OF THIRD PARTY INTELLECTUAL PROPERTY RIGHTS.

These resources are intended for skilled developers designing with TI products. You are solely responsible for (1) selecting the appropriate TI products for your application, (2) designing, validating and testing your application, and (3) ensuring your application meets applicable standards, and any other safety, security, regulatory or other requirements.

These resources are subject to change without notice. TI grants you permission to use these resources only for development of an application that uses the TI products described in the resource. Other reproduction and display of these resources is prohibited. No license is granted to any other TI intellectual property right or to any third party intellectual property right. TI disclaims responsibility for, and you fully indemnify TI and its representatives against any claims, damages, costs, losses, and liabilities arising out of your use of these resources.

TI’s products are provided subject to TI’s Terms of Sale, TI’s General Quality Guidelines, or other applicable terms available either on ti.com or provided in conjunction with such TI products. TI’s provision of these resources does not expand or otherwise alter TI’s applicable warranties or warranty disclaimers for TI products. Unless TI explicitly designates a product as custom or customer-specified, TI products are standard, catalog, general purpose devices.

TI objects to and rejects any additional or different terms you may propose.

Copyright © 2026, Texas Instruments Incorporated

Last updated 10/2025