OP07x Precision Operational Amplifiers

1 Features

- Low noise
- No external components required
- Replace chopper amplifiers at a lower cost
- Wide input-voltage range:
  0 V to ±14 V (typ, ±15-V supply)
- Wide supply-voltage range: ±3 V to ±18 V

2 Applications

- Analog input module
- Battery test
- Lab and field instrumentation
- Temperature transmitter
- Merchant network & server PSU

3 Description

The OP07C and OP07D (OP07x) devices offer low offset and long-term stability by means of a low-noise, chopperless, bipolar-input-transistor amplifier circuit. For most applications, external components are not required for offset nulling and frequency compensation. The true differential input, with a wide input-voltage range and outstanding common-mode rejection, provides maximum flexibility and performance in high-noise environments and in noninverting applications. Low bias currents and extremely high input impedances are maintained over the entire temperature range.

For improved performance and wider temperature range, see the next generation OPA207 with low power, and OPA202 with heavy capacitive load drive capability.

Package Information

PART NUMBER	PACKAGE(1)	BODY SIZE (NOM)
OP07C, OP07D	D (SOIC, 8)	4.90 mm × 3.91 mm
	P (PDIP, 8)	9.81 mm × 6.35 mm
	PS (SO, 8)	6.20 mm × 5.30 mm

(1) For all available packages and the OP07, see the orderable addendum at the end of the data sheet.

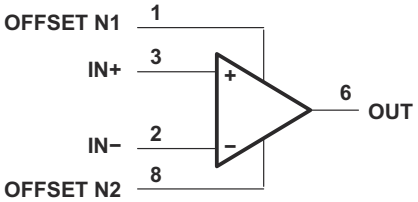

Simplified Schematic

An IMPORTANT NOTICE at the end of this data sheet addresses availability, warranty, changes, use in safety-critical applications, intellectual property matters and other important disclaimers. PRODUCTION DATA.

Table of Contents

1 Features....1
2 Applications....1
3 Description....1
4 Revision History....2
5 Pin Configuration and Functions....3
6 Specifications....4
6.1 Absolute Maximum Ratings....4
6.2 ESD Ratings....4
6.3 Recommended Operating Conditions....4
6.4 Thermal Information....4
6.5 Electrical Characteristics....5
6.6 Typical Characteristics....6
7 Detailed Description....7
7.1 Overview....7
7.2 Functional Block Diagram....7
7.3 Feature Description....7
7.4 Device Functional Modes....7
8 Application and Implementation....8
8.1 Application Information....8
8.2 Typical Application....8
8.3 Power Supply Recommendations....9
8.4 Layout....10
9 Device and Documentation Support....11
9.1 Receiving Notification of Documentation Updates....11
9.2 Support Resources....11
9.3 Trademarks....11
9.4 Electrostatic Discharge Caution....11
9.5 Glossary....11
10 Mechanical, Packaging, and Orderable Information....11

4 Revision History

NOTE: Page numbers for previous revisions may differ from page numbers in the current version.

Changes from Revision G (November 2014) to Revision H (July 2022)	Page
• Added supply condition to wide input voltage range feature bullet	1
• Changed VCC_+ to V+ and VCC_- to V−	3
• Changed supply voltage abbreviation from VCC+ and VCC– to V_S in *Absolute Maximum Ratings* and throughout the data sheet	4
• Changed note 5 in *Absolute Maximum Ratings* to include a note that fast-ramping shorts to the positive supply can damage the device	4
• Changed Electrostatic discharge Human-body model and Charged-device model from 1000 V to ±1000 V	4
• Added new values to *Thermal Information*	4
• Changed *Electrical Characteristics* format	5
• Changed parameter name from supply-voltage sensitivity to power supply rejection ratio in *Electrical Characteristics*	5
• Changed parameter name from input offset voltage to Input voltage noise density in *Electrical Characteristics*	5
• Changed input current noise density unit from nV/√Hz to pA/√Hz in *Electrical Characteristics*	5
• Changed parameter name from large-signal differential voltage gain to open-loop voltage gain in *Electrical Characteristics*	5
• Changed parameter name from peak output voltage to voltage output swing in Electrical Characteristics	5
• Changed functional block diagram	7
• Changed text to clarify how to adjust input mismatches using null pins in *Application Information*	8

Changes from Revision F (January 2014) to Revision G (November 2014)	Page
• Added *Applications*, *Device Information* table, *Pin Functions* table, *Handling Ratings* table, *Thermal Information* table, *Typical Characteristics*, *Feature Description* section, *Device Functional Modes*, *Application and Implementation* section, *Power Supply Recommendations* section, *Layout* section, *Device and Documentation Support* section, and *Mechanical, Packaging, and Orderable Information* section	1

Changes from Revision E (May 2004) to Revision F (January 2014)	Page
• Deleted *Ordering Information* table	1

Copyright © 2023 Texas Instruments Incorporated

5 Pin Configuration and Functions

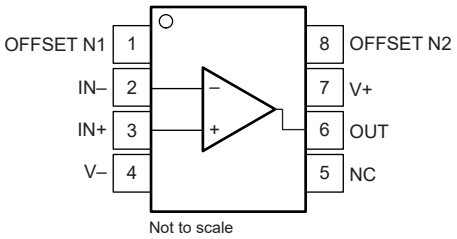

Figure 5-1. D Package, 8-Pin SOIC, P Package, 8-Pin PDIP, and PS Package, 8-Pin SO (Top View)

Table 5-1. Pin Functions

PIN		TYPE	DESCRIPTION
NAME	NO.		
IN+	3	Input	Noninverting input
IN–	2	Input	Inverting input
NC	5	—	Do not connect
OFFSET N1	1	Input	External input offset voltage adjustment
OFFSET N2	8	Input	External input offset voltage adjustment
OUT	6	Output	Output
V+	7	—	Positive supply
V–	4	—	Negative supply

Copyright © 2023 Texas Instruments Incorporated

6 Specifications

6.1 Absolute Maximum Ratings

over operating free-air temperature range (unless otherwise noted) (1)

			MIN	MAX	UNIT
V_S	Supply voltage(2)	Single supply		44	V
		Dual supply		±22	
	Input voltage	Differential(3)		±30	V
		Single-ended(4)		±22	
	Output short-circuit(5)		Continous		
T_J	Operating junction temperature		–55	150	°C
T_{stg}	Storage temperature		–65	150	°C

(1) Stresses beyond those listed under *Absolute Maximum Ratings* may cause permanent damage to the device. These are stress ratings only, which do not imply functional operation of the device at these or any other conditions beyond those indicated under *Recommended Operating Conditions*. Exposure to absolute-maximum-rated conditions for extended periods may affect device reliability.
(2) All voltage values, unless otherwise noted, are with respect to the midpoint between V+ and V−.
(3) Differential voltages are at IN+ with respect to IN−.
(4) The magnitude of the input voltage must never exceed the magnitude of the supply voltage or 15 V, whichever is less.
(5) The output can be shorted to ground or to the negative power supply. Fast ramping shorts to the positive supply can cause permanent damage and eventual destruction.

6.2 ESD Ratings

			VALUE	UNIT
$V_{(ESD)}$	Electrostatic discharge	Human-body model (HBM), per ANSI/ESDA/JEDEC JS-001(1)	±1000	V
		Charged-device model (CDM), per JEDEC specification JESD22-C101(2)	±1000	

(1) JEDEC document JEP155 states that 500-V HBM allows safe manufacturing with a standard ESD control process.
(2) JEDEC document JEP157 states that 250-V CDM allows safe manufacturing with a standard ESD control process.

6.3 Recommended Operating Conditions

over operating free-air temperature range (unless otherwise noted)

			MIN	NOM	MAX	UNIT
V_S	Supply voltage	Single supply	6		36	V
		Dual supply	±3		±18	
V_{CM}	Common-mode input voltage	V_S = ±15 V	–13		13	V
T_A	Operating ambient temperature		0		70	°C

6.4 Thermal Information

THERMAL METRIC(1)		OP07x		UNIT
		D (SOIC)	P (PDIP)	
		8 PINS	8 PINS	
$R_{\theta JA}$	Junction-to-ambient thermal resistance	127.6	85	°C/W
$R_{\theta JC(top)}$	Junction-to-case (top) thermal resistance	67.1	68.6	°C/W
$R_{\theta JB}$	Junction-to-board thermal resistance	71.4	55..6	°C/W
ψ_{JT}	Junction-to-top characterization parameter	18.7	38.3	°C/W
ψ_{JB}	Junction-to-board characterization parameter	70.6	55.2	°C/W
$R_{\theta JC(bot)}$	Junction-to-case (bottom) thermal resistance	—	—	°C/W

(1) For more information about traditional and new thermal metrics, see the Semiconductor and IC Package Thermal Metrics application report.

Copyright © 2023 Texas Instruments Incorporated

6.5 Electrical Characteristics

at T_A = 25°C, V_S = ±15 V, R_L = 2 kΩ connected to mid-supply, and V_{CM} = V_{OUT} = mid-supply (unless otherwise noted)[1].

PARAMETER		TEST CONDITIONS		MIN	TYP	MAX	UNIT
OFFSET VOLTAGE							
V_{OS}	Input offset voltage	OP07C			±60		µV
			T_A = 0°C to 70°C		±85		
		OP07D				±150	
			T_A = 0°C to 70°C			±250	
dV_{OS}/dT	Input offset voltage drift	T_A = 0°C to 70°C	OP07C		±0.5		µV/°C
			OP07D			±2.5	
	Long-term drift of input offset voltage[2]				±0.4		µV/mo
	Offset adjustment range	R_s = 20 kΩ, see Section 8.1			±4		mV
PSRR	Power supply rejection ratio	V_S = ±3 V to ±18 V			7	32	µV/V
			T_A = 0°C to 70°C		10	51	
INPUT BIAS CURRENT							
I_B	Input bias current	OP07C			±1.8		nA
			T_A = 0°C to 70°C		±2.2		
		OP07D				±12	
			T_A = 0°C to 70°C			±14	
	Input bias current drift	OP07C			±18		pA/°C
		OP07D				±50	
I_{OS}	Input offset current	OP07C			±0.8		nA
			T_A = 0°C to 70°C		±1.6		
		OP07D				±6	
			T_A = 0°C to 70°C			±8	
	Input offset current drift	OP07C			12		pA/°C
		OP07D				±50	
NOISE							
	Input voltage noise	f = 0.1 Hz to 10 Hz			0.38		$µV_{PP}$
e_N	Input voltage noise density	f = 10 Hz			10.5		$nV/\sqrt{Hz}$
		f = 100 Hz			10.2		
		f = 1 kHz			9.8		
	Input current noise	f = 0.1 Hz to 10 Hz			15		pA_{pp}
i_N	Input current noise density	f = 10 Hz			0.35		$pA/\sqrt{Hz}$
		f = 100 Hz			0.15		
		f = 1 kHz			0.13		
INPUT VOLTAGE RANGE							
V_{CM}	Common-mode voltage			±13	±14		V
		T_A = 0°C to 70°C		±13	±13.5		
CMRR	Common-mode rejection ratio	OP07C V_{CM} = ±13 V		100	120		dB
			T_A = 0°C to 70°C	97	120		
		OP07D V_{CM} = ±13 V		94	110		
			T_A = 0°C to 70°C	94	106		
INPUT CAPACITANCE							
r_I	Input resistance				7	33	MΩ
OPEN-LOOP GAIN							
A_{OL}	Open-loop voltage gain	1.4 V < V_O < 11.4 V, R_L = 500 kΩ	OP07C	100	400		V/mV
			OP07D		400		
		V_O = ±10 V		120	400		
			T_A = –40°C to +125°C	100	400		

Copyright © 2023 Texas Instruments Incorporated

6.5 Electrical Characteristics (continued)

at T_A = 25°C, V_S = ±15 V, R_L = 2 kΩ connected to mid-supply, and V_{CM} = V_{OUT} = mid-supply (unless otherwise noted)(1).

PARAMETER		TEST CONDITIONS	MIN	TYP	MAX	UNIT
FREQUENCY RESPONSE						
	Unity gain bandwidth		0.4	0.6		MHz
SR	Slew rate	V_S = 5 V, R_L = 2 kΩ		0.3		V/µs
OUTPUT						
	Voltage output swing		±11.5	±12.8		V
		T_A = 0°C to 70°C	±11	±12.6		
		R_L = 10 kΩ	±12	±13		
		R_L = 1 kΩ		±12		
POWER SUPPLY						
P_D	Power dissipation	No load		80	150	mW
		V_S = ±3 V, no load		4	8	

(1) The specifications listed in the *Electrical Characteristics* apply to OP07C and OP07D.
(2) Because long-term drift cannot be measured on the individual devices before shipment, this specification is not intended to be a warranty. This specification is an engineering estimate of the averaged trend line of drift versus time over extended periods after the first 30 days of operation.

6.6 Typical Characteristics

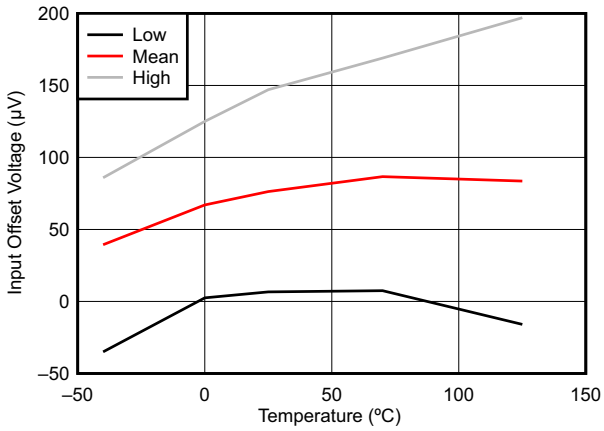

Figure 6-1. Input-Offset Voltage vs Temperature

Copyright © 2023 Texas Instruments Incorporated

7 Detailed Description

7.1 Overview

These devices offer low offset and long-term stability by means of a low-noise, chopperless, bipolar-input-transistor amplifier circuit. For most applications, external components are not required for offset nulling and frequency compensation. The true differential input, with a wide input-voltage range and outstanding common-mode rejection, provides maximum flexibility and performance in high-noise environments and in noninverting applications. Low bias currents and extremely high input impedances are maintained over the entire temperature range.

These devices are characterized for operation from 0°C to 70°C.

7.2 Functional Block Diagram

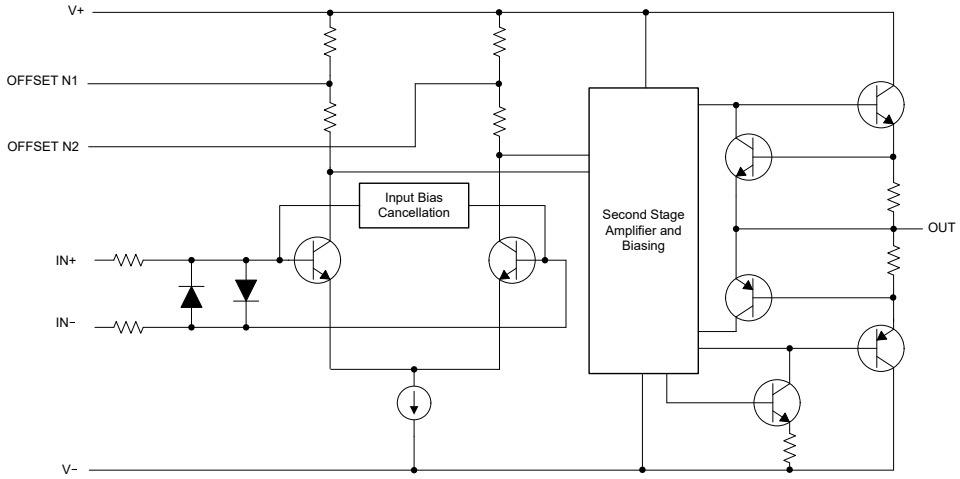

7.3 Feature Description

7.3.1 Offset-Voltage Null Capability

The input offset voltage of operational amplifiers (op amps) arises from unavoidable mismatches in the differential input stage of the op-amp circuit caused by mismatched transistor pairs, collector currents, current-gain betas (β), collector or emitter resistors, and so on. The input offset pins allow the designer to adjust for these mismatches by external circuitry. See *Section 8* for more details on design techniques.

7.3.2 Slew Rate

The slew rate is the rate at which an operational amplifier can change the output when there is a change on the input. The OP07x have a 0.3-V/µs slew rate.

7.4 Device Functional Modes

The OP07x are powered on when the supply is connected. The devices can be operated as single-supply operational amplifiers or dual-supply amplifiers, depending on the application.

Copyright © 2023 Texas Instruments Incorporated

8 Application and Implementation

Note

Information in the following applications sections is not part of the TI component specification, and TI does not warrant its accuracy or completeness. TI's customers are responsible for determining suitability of components for their purposes, as well as validating and testing their design implementation to confirm system functionality.

8.1 Application Information

The input offset voltage of operational amplifiers (op amps) arises from unavoidable mismatches in the differential input stage of the op-amp circuit caused by mismatched transistor pairs, collector currents, current-gain betas (β), collector or emitter resistors, and so on. The input offset pins allow the designer to adjust for these mismatches with external circuitry. Figure 8-1 shows how these input mismatches can be adjusted by putting resistors or a potentiometer between the null pins. Use a potentiometer to fine tune the circuit during testing or for applications that require precision offset control. For more information about designing using the input-offset pins, see the *Nulling Input Offset Voltage of Operational Amplifiers* application report.

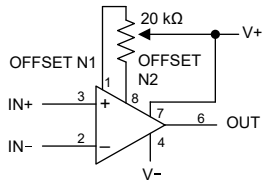

Figure 8-1. Input Offset-Voltage Null Circuit

8.2 Typical Application

The voltage follower configuration of the operational amplifier is used for applications where a weak signal is used to drive a relatively high current load. This circuit is also called a buffer amplifier or unity gain amplifier. The inputs of an operational amplifier have a very high resistance that puts a negligible current load on the voltage source. The output resistance of the operational amplifier is almost negligible, so the amplifier can provide as much current as necessary to the output load.

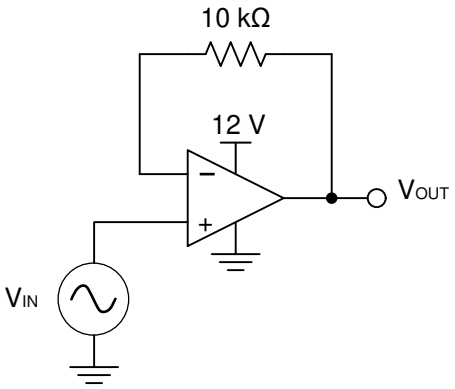

Figure 8-2. Voltage Follower Schematic

8.2.1 Design Requirements

- Output range of 2 V to 11 V
- Input range of 2 V to 11 V

Copyright © 2023 Texas Instruments Incorporated

8.2.2 Detailed Design Procedure

8.2.2.1 Output Voltage Swing

The output voltage of an operational amplifier is limited by the internal circuitry to some level less than the supply rails. For this amplifier, the output voltage swing is within ±12 V, which accommodates the input and output voltage requirements.

8.2.2.2 Supply and Input Voltage

For correct operation of the amplifier, neither input must be higher than the recommended positive supply rail voltage or lower than the recommended negative supply rail voltage. The chosen amplifier must be able to operate at the supply voltage that accommodates the inputs. Because the input for this application goes up to 11 V, the supply voltage must be 12 V. Using a negative voltage on the lower rail, rather than ground, allows the amplifier to maintain linearity for inputs below 2 V.

8.2.3 Application Curves

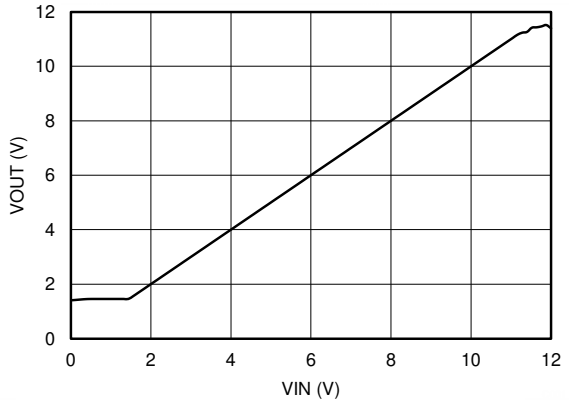

Figure 8-3. Output Voltage vs Input Voltage

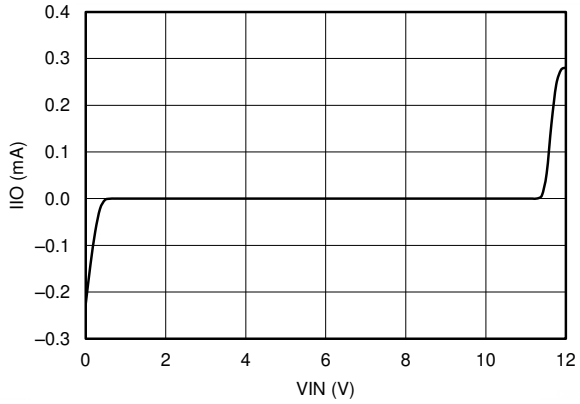

Figure 8-4. Current Drawn by the Input of the Voltage Follower (I_{IO}) vs Input Voltage

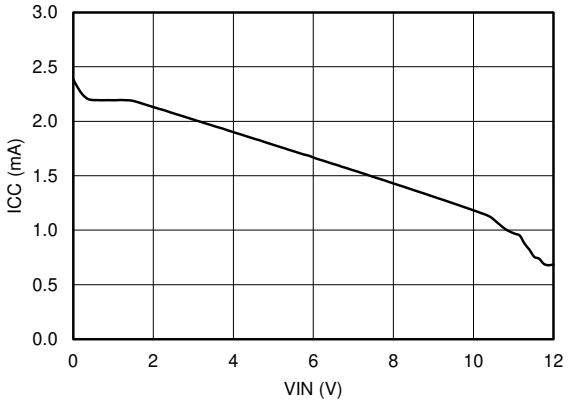

Figure 8-5. Current Drawn from Supply (I_{CC}) vs Input Voltage

8.3 Power Supply Recommendations

The OP07x operate from ±3 V to ±18 V supplies; many specifications apply from 0°C to 70°C.

CAUTION

Supply voltages larger than ±22 V can permanently damage the device. See also *Section 6.1*.

Place 0.1-µF bypass capacitors close to the power-supply pins to reduce errors coupling in from noisy or high-impedance power supplies. For more details on bypass capacitor placement, see *Section 8.4.1*.

Copyright © 2023 Texas Instruments Incorporated

8.4 Layout

8.4.1 Layout Guidelines

For best operational performance of the device, use good PCB layout practices, including:

- Noise can propagate into analog circuitry through the power pins of the circuit as a whole, as well as the operational amplifier. Bypass capacitors are used to reduce the coupled noise by providing low-impedance power sources local to the analog circuitry.
  - Connect low-ESR, 0.1-µF ceramic bypass capacitors between each supply pin and ground, placed as close to the device as possible. A single bypass capacitor from V+ to ground is applicable for single supply applications.
- Separate grounding for analog and digital portions of circuitry is one of the simplest and most-effective methods of noise suppression. On multilayer PCBs, one or more layers are usually devoted to ground planes. A ground plane helps distribute heat and reduces EMI noise pickup. Make sure to physically separate digital and analog grounds, paying attention to the flow of the ground current.
- To reduce parasitic coupling, run the input traces as far away from the supply or output traces as possible. If it is not possible to keep them separate, it is much better to cross the sensitive trace perpendicularly, as opposed to in parallel, with the noisy trace.
- Place the external components as close to the device as possible. Keeping RF and RG close to the inverting input minimizes parasitic capacitance, as shown in *Section 8.4.2*.
- Keep the length of input traces as short as possible. Always remember that the input traces are the most sensitive part of the circuit.
- Consider a driven, low-impedance guard ring around the critical traces. A guard ring can significantly reduce leakage currents from nearby traces that are at different potentials.

8.4.2 Layout Example

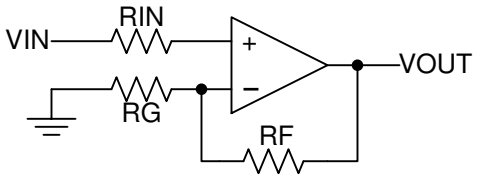

Figure 8-6. Operational Amplifier Schematic for Noninverting Configuration

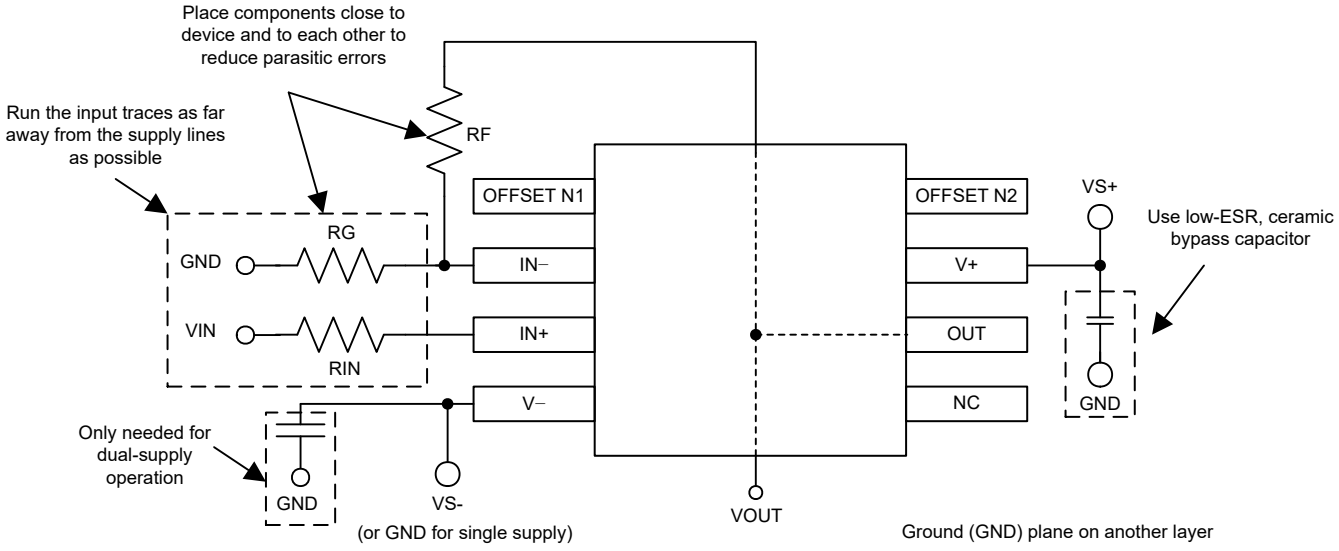

Figure 8-7. Operational Amplifier Board Layout for Noninverting Configuration

Copyright © 2023 Texas Instruments Incorporated

9 Device and Documentation Support

9.1 Receiving Notification of Documentation Updates

To receive notification of documentation updates, navigate to the device product folder on ti.com. Click on *Subscribe to updates* to register and receive a weekly digest of any product information that has changed. For change details, review the revision history included in any revised document.

9.2 Support Resources

TI E2E™ support forums are an engineer's go-to source for fast, verified answers and design help — straight from the experts. Search existing answers or ask your own question to get the quick design help you need.

Linked content is provided "AS IS" by the respective contributors. They do not constitute TI specifications and do not necessarily reflect TI's views; see TI's Terms of Use.

9.3 Trademarks

TI E2E™ is a trademark of Texas Instruments.
All trademarks are the property of their respective owners.

9.4 Electrostatic Discharge Caution



This integrated circuit can be damaged by ESD. Texas Instruments recommends that all integrated circuits be handled with appropriate precautions. Failure to observe proper handling and installation procedures can cause damage.

ESD damage can range from subtle performance degradation to complete device failure. Precision integrated circuits may be more susceptible to damage because very small parametric changes could cause the device not to meet its published specifications.

9.5 Glossary

TI Glossary	This glossary lists and explains terms, acronyms, and definitions.

10 Mechanical, Packaging, and Orderable Information

The following pages include mechanical packaging and orderable information. This information is the most current data available for the designated devices. This data is subject to change without notice and revision of this document. For browser based versions of this data sheet, refer to the left hand navigation.

Copyright © 2023 Texas Instruments Incorporated

PACKAGING INFORMATION

Orderable part number	Status (1)	Material type (2)	Package | Pins	Package qty | Carrier	RoHS (3)	Lead finish/ Ball material (4)	MSL rating/ Peak reflow (5)	Op temp (°C)	Part marking (6)
OP-07DP	Active	Production	PDIP (P) | 8	50 | TUBE	Yes	NIPDAU	N/A for Pkg Type	0 to 70	OP-07DP
OP-07DP.A	Active	Production	PDIP (P) | 8	50 | TUBE	Yes	NIPDAU	N/A for Pkg Type	See OP-07DP	OP-07DP
OP-07DPS	Active	Production	SO (PS) | 8	80 | TUBE	Yes	NIPDAU	Level-1-260C-UNLIM	0 to 70	OP-07D
OP-07DPS.A	Active	Production	SO (PS) | 8	80 | TUBE	Yes	NIPDAU	Level-1-260C-UNLIM	See OP-07DPS	OP-07D
OP-07DPSR	Active	Production	SO (PS) | 8	2000 | LARGE T&R	Yes	NIPDAU	Level-1-260C-UNLIM	0 to 70	OP-07D
OP-07DPSR.A	Active	Production	SO (PS) | 8	2000 | LARGE T&R	Yes	NIPDAU	Level-1-260C-UNLIM	See OP-07DPSR	OP-07D
OP07-W	Active	Production	WAFERSALE (YS) | 0	3603 | null	-	Call TI	Call TI	-	
OP07CD	Obsolete	Production	SOIC (D) | 8	-	-	Call TI	Call TI	0 to 70	OP07C
OP07CDR	Active	Production	SOIC (D) | 8	2500 | LARGE T&R	Yes	NIPDAU	Level-1-260C-UNLIM	0 to 70	OP07C
OP07CDR.A	Active	Production	SOIC (D) | 8	2500 | LARGE T&R	Yes	NIPDAU	Level-1-260C-UNLIM	See OP07CDR	OP07C
OP07CDR.B	Active	Production	SOIC (D) | 8	2500 | LARGE T&R	Yes	NIPDAU	Level-1-260C-UNLIM	See OP07CDR	OP07C
OP07CP	Active	Production	PDIP (P) | 8	50 | TUBE	Yes	NIPDAU	N/A for Pkg Type	0 to 70	OP07CP
OP07CP.A	Active	Production	PDIP (P) | 8	50 | TUBE	Yes	NIPDAU	N/A for Pkg Type	See OP07CP	OP07CP
OP07CP.B	Active	Production	PDIP (P) | 8	50 | TUBE	Yes	NIPDAU	N/A for Pkg Type	See OP07CP	OP07CP
OP07DD	Active	Production	SOIC (D) | 8	75 | TUBE	Yes	NIPDAU	Level-1-260C-UNLIM	0 to 70	OP07D
OP07DD.A	Active	Production	SOIC (D) | 8	75 | TUBE	Yes	NIPDAU	Level-1-260C-UNLIM	See OP07DD	OP07D
OP07DDR	Active	Production	SOIC (D) | 8	2500 | LARGE T&R	Yes	NIPDAU	Level-1-260C-UNLIM	0 to 70	OP07D
OP07DDR.A	Active	Production	SOIC (D) | 8	2500 | LARGE T&R	Yes	NIPDAU	Level-1-260C-UNLIM	See OP07DDR	OP07D
OP07DP	Active	Production	PDIP (P) | 8	50 | TUBE	Yes	NIPDAU	N/A for Pkg Type	0 to 70	OP07DP
OP07DP.A	Active	Production	PDIP (P) | 8	50 | TUBE	Yes	NIPDAU	N/A for Pkg Type	See OP07DP	OP07DP
OP07DPE4	Active	Production	PDIP (P) | 8	50 | TUBE	Yes	NIPDAU	N/A for Pkg Type	0 to 70	OP07DP

(1) **Status:** For more details on status, see our product life cycle.

(2) **Material type:** When designated, preproduction parts are prototypes/experimental devices, and are not yet approved or released for full production. Testing and final process, including without limitation quality assurance, reliability performance testing, and/or process qualification, may not yet be complete, and this item is subject to further changes or possible discontinuation. If available for ordering, purchases will be subject to an additional waiver at checkout, and are intended for early internal evaluation purposes only. These items are sold without warranties of any kind.

(3) **RoHS values:** Yes, No, RoHS Exempt. See the TI RoHS Statement for additional information and value definition.

(4) Lead finish/Ball material: Parts may have multiple material finish options. Finish options are separated by a vertical ruled line. Lead finish/Ball material values may wrap to two lines if the finish value exceeds the maximum column width.

(5) MSL rating/Peak reflow: The moisture sensitivity level ratings and peak solder (reflow) temperatures. In the event that a part has multiple moisture sensitivity ratings, only the lowest level per JEDEC standards is shown. Refer to the shipping label for the actual reflow temperature that will be used to mount the part to the printed circuit board.

(6) Part marking: There may be an additional marking, which relates to the logo, the lot trace code information, or the environmental category of the part.

Multiple part markings will be inside parentheses. Only one part marking contained in parentheses and separated by a "~" will appear on a part. If a line is indented then it is a continuation of the previous line and the two combined represent the entire part marking for that device.

Important Information and Disclaimer: The information provided on this page represents TI's knowledge and belief as of the date that it is provided. TI bases its knowledge and belief on information provided by third parties, and makes no representation or warranty as to the accuracy of such information. Efforts are underway to better integrate information from third parties. TI has taken and continues to take reasonable steps to provide representative and accurate information but may not have conducted destructive testing or chemical analysis on incoming materials and chemicals. TI and TI suppliers consider certain information to be proprietary, and thus CAS numbers and other limited information may not be available for release.

In no event shall TI's liability arising out of such information exceed the total purchase price of the TI part(s) at issue in this document sold by TI to Customer on an annual basis.

TAPE AND REEL INFORMATION

REEL DIMENSIONS

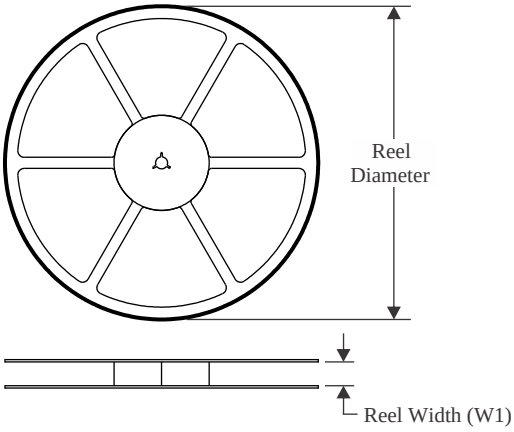

TAPE DIMENSIONS

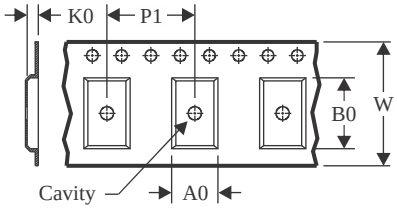

A0	Dimension designed to accommodate the component width
B0	Dimension designed to accommodate the component length
K0	Dimension designed to accommodate the component thickness
W	Overall width of the carrier tape
P1	Pitch between successive cavity centers

QUADRANT ASSIGNMENTS FOR PIN 1 ORIENTATION IN TAPE

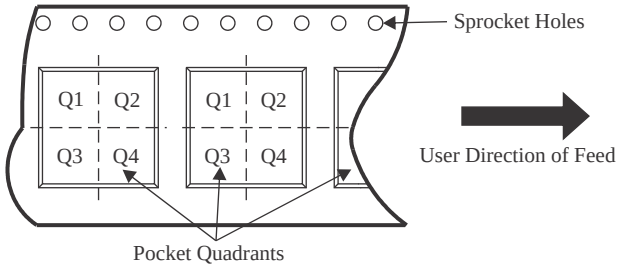

*All dimensions are nominal

Device	Package Type	Package Drawing	Pins	SPQ	Reel Diameter (mm)	Reel Width W1 (mm)	A0 (mm)	B0 (mm)	K0 (mm)	P1 (mm)	W (mm)	Pin1 Quadrant
OP-07DPSR	SO	PS	8	2000	330.0	16.4	8.35	6.6	2.4	12.0	16.0	Q1
OP07CDR	SOIC	D	8	2500	330.0	12.4	6.4	5.2	2.1	8.0	12.0	Q1
OP07CDR	SOIC	D	8	2500	330.0	12.4	6.4	5.2	2.1	8.0	12.0	Q1
OP07CDR	SOIC	D	8	2500	330.0	12.4	6.4	5.2	2.1	8.0	12.0	Q1
OP07DDR	SOIC	D	8	2500	330.0	12.4	6.4	5.2	2.1	8.0	12.0	Q1

TAPE AND REEL BOX DIMENSIONS

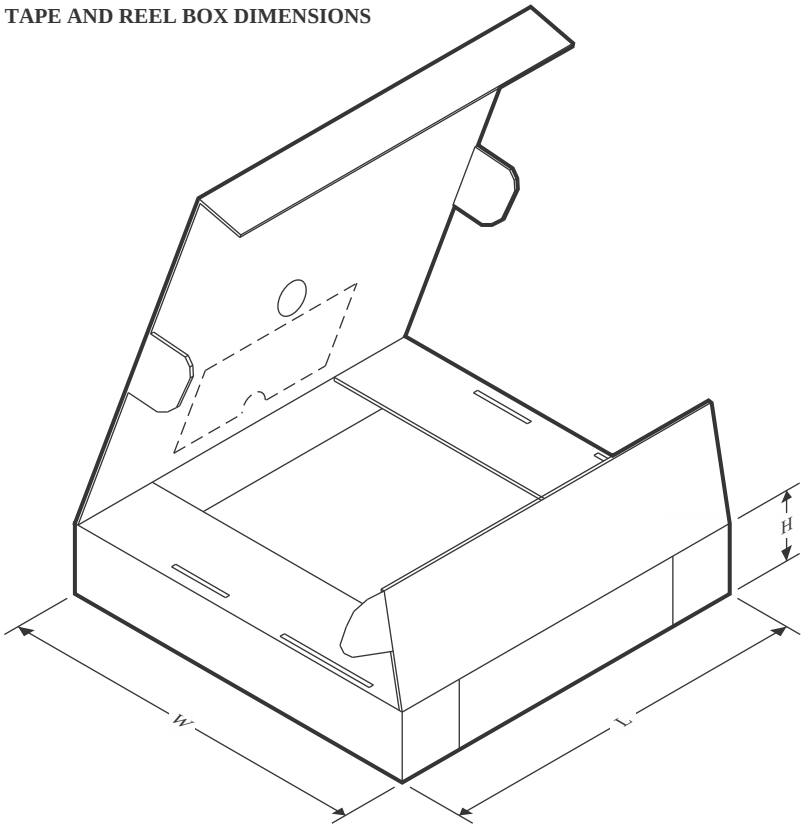

*All dimensions are nominal

Device	Package Type	Package Drawing	Pins	SPQ	Length (mm)	Width (mm)	Height (mm)
OP-07DPSR	SO	PS	8	2000	353.0	353.0	32.0
OP07CDR	SOIC	D	8	2500	340.5	338.1	20.6
OP07CDR	SOIC	D	8	2500	353.0	353.0	32.0
OP07CDR	SOIC	D	8	2500	353.0	353.0	32.0
OP07DDR	SOIC	D	8	2500	353.0	353.0	32.0

TUBE

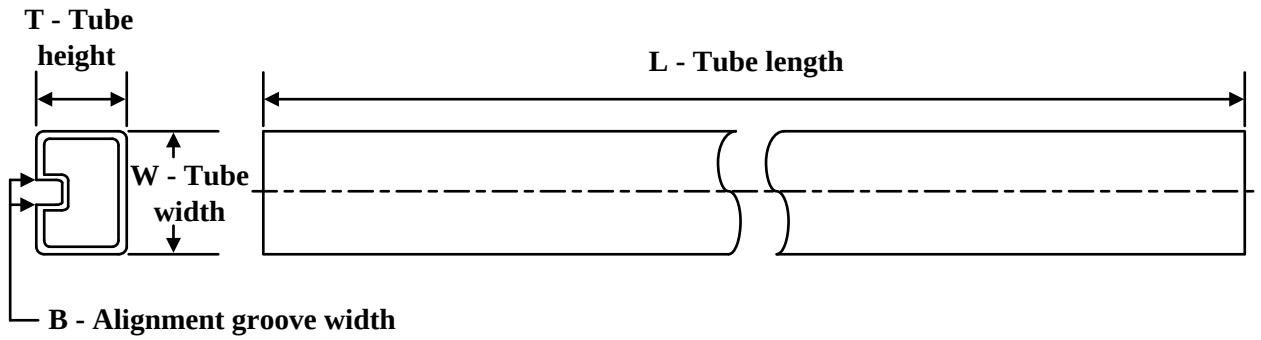

*All dimensions are nominal

Device	Package Name	Package Type	Pins	SPQ	L (mm)	W (mm)	T (µm)	B (mm)
OP-07DP	P	PDIP	8	50	506	13.97	11230	4.32
OP-07DP.A	P	PDIP	8	50	506	13.97	11230	4.32
OP-07DPS	PS	SOP	8	80	530	10.5	4000	4.1
OP-07DPS.A	PS	SOP	8	80	530	10.5	4000	4.1
OP07CP	P	PDIP	8	50	506	13.97	11230	4.32
OP07CP.A	P	PDIP	8	50	506	13.97	11230	4.32
OP07CP.B	P	PDIP	8	50	506	13.97	11230	4.32
OP07DD	D	SOIC	8	75	507	8	3940	4.32
OP07DD.A	D	SOIC	8	75	507	8	3940	4.32
OP07DP	P	PDIP	8	50	506	13.97	11230	4.32
OP07DP.A	P	PDIP	8	50	506	13.97	11230	4.32
OP07DPE4	P	PDIP	8	50	506	13.97	11230	4.32

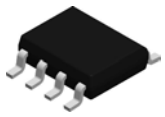

PACKAGE OUTLINE

D0008A

SOIC - 1.75 mm max height

SMALL OUTLINE INTEGRATED CIRCUIT

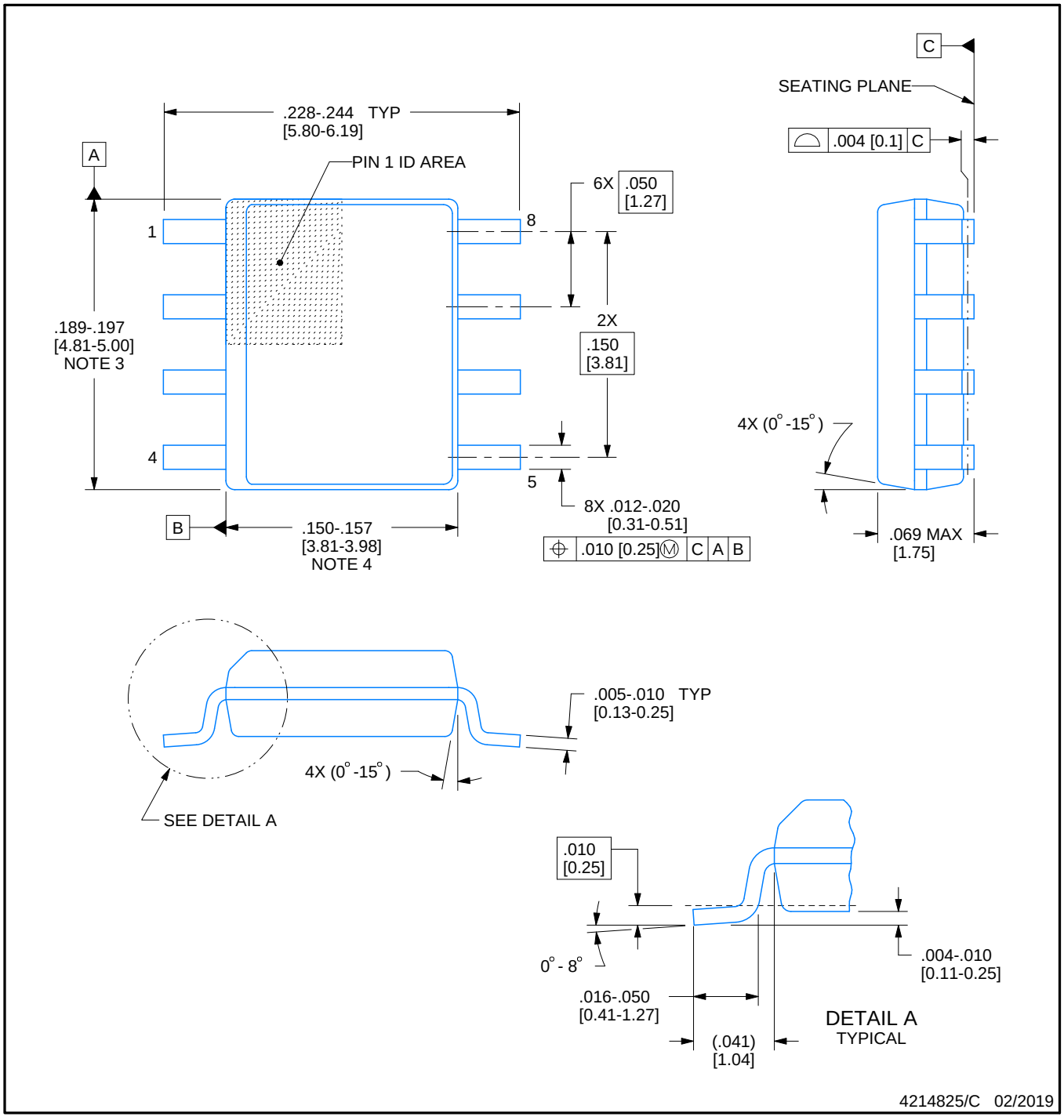

NOTES:

1. Linear dimensions are in inches [millimeters]. Dimensions in parenthesis are for reference only. Controlling dimensions are in inches. Dimensioning and tolerancing per ASME Y14.5M.
2. This drawing is subject to change without notice.
3. This dimension does not include mold flash, protrusions, or gate burrs. Mold flash, protrusions, or gate burrs shall not exceed .006 [0.15] per side.
4. This dimension does not include interlead flash.
5. Reference JEDEC registration MS-012, variation AA.

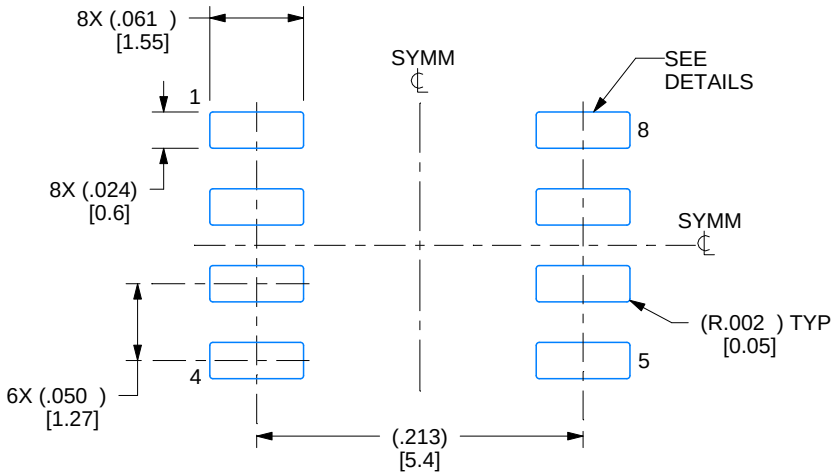

LAND PATTERN EXAMPLE
EXPOSED METAL SHOWN
SCALE:8X

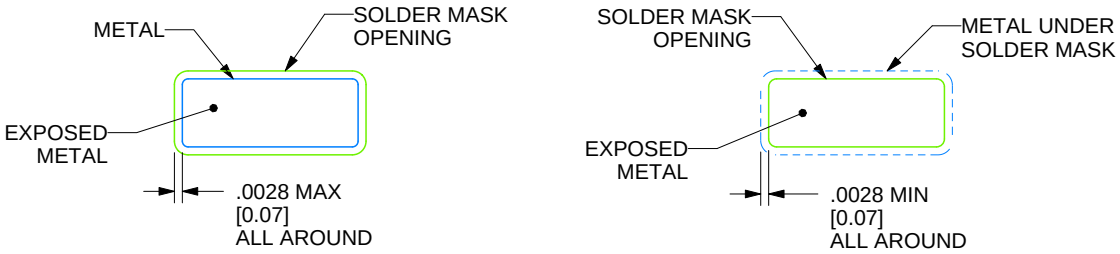

SOLDER MASK DETAILS

4214825/C 02/2019

NOTES: (continued)

6. Publication IPC-7351 may have alternate designs.
7. Solder mask tolerances between and around signal pads can vary based on board fabrication site.

EXAMPLE STENCIL DESIGN

D0008A

SOIC - 1.75 mm max height

SMALL OUTLINE INTEGRATED CIRCUIT

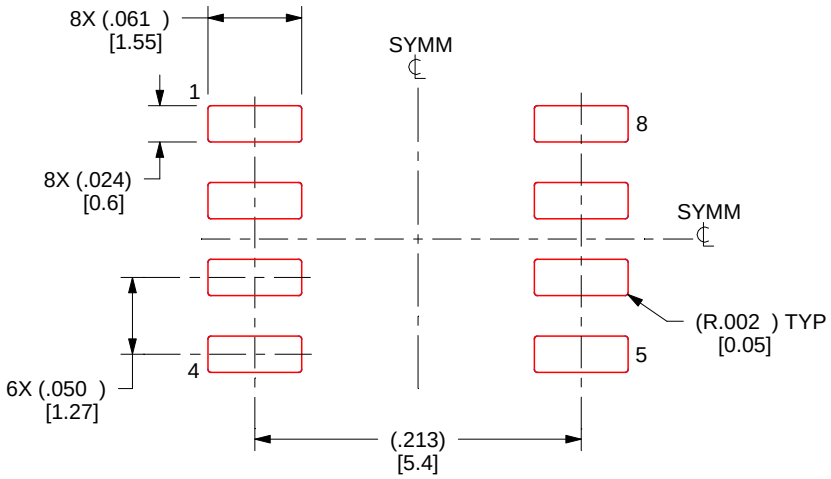

SOLDER PASTE EXAMPLE
BASED ON .005 INCH [0.125 MM] THICK STENCIL
SCALE:8X

4214825/C 02/2019

NOTES: (continued)

8. Laser cutting apertures with trapezoidal walls and rounded corners may offer better paste release. IPC-7525 may have alternate design recommendations.
9. Board assembly site may have different recommendations for stencil design.

MECHANICAL DATA

PS (R-PDSO-G8) **PLASTIC SMALL-OUTLINE PACKAGE**

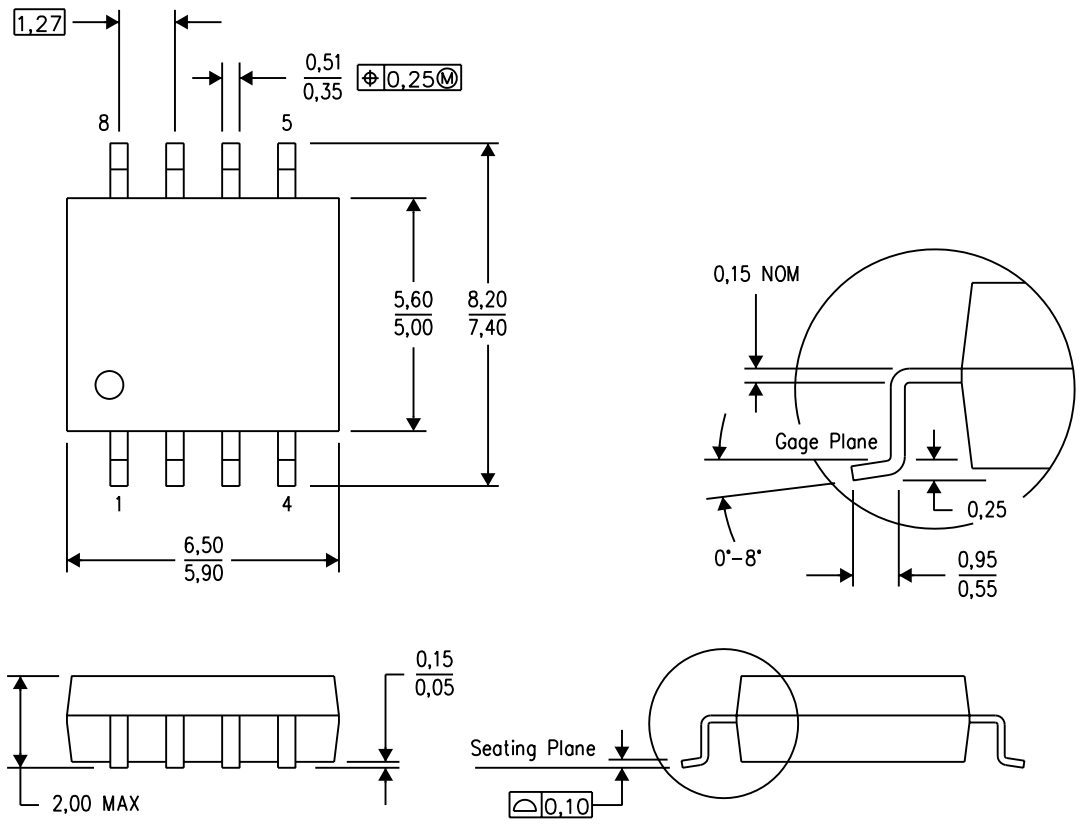

4040063/C 03/03

NOTES:
A. All linear dimensions are in millimeters.
B. This drawing is subject to change without notice.
C. Body dimensions do not include mold flash or protrusion, not to exceed 0,15.

P (R–PDIP–T8) PLASTIC DUAL–IN–LINE PACKAGE

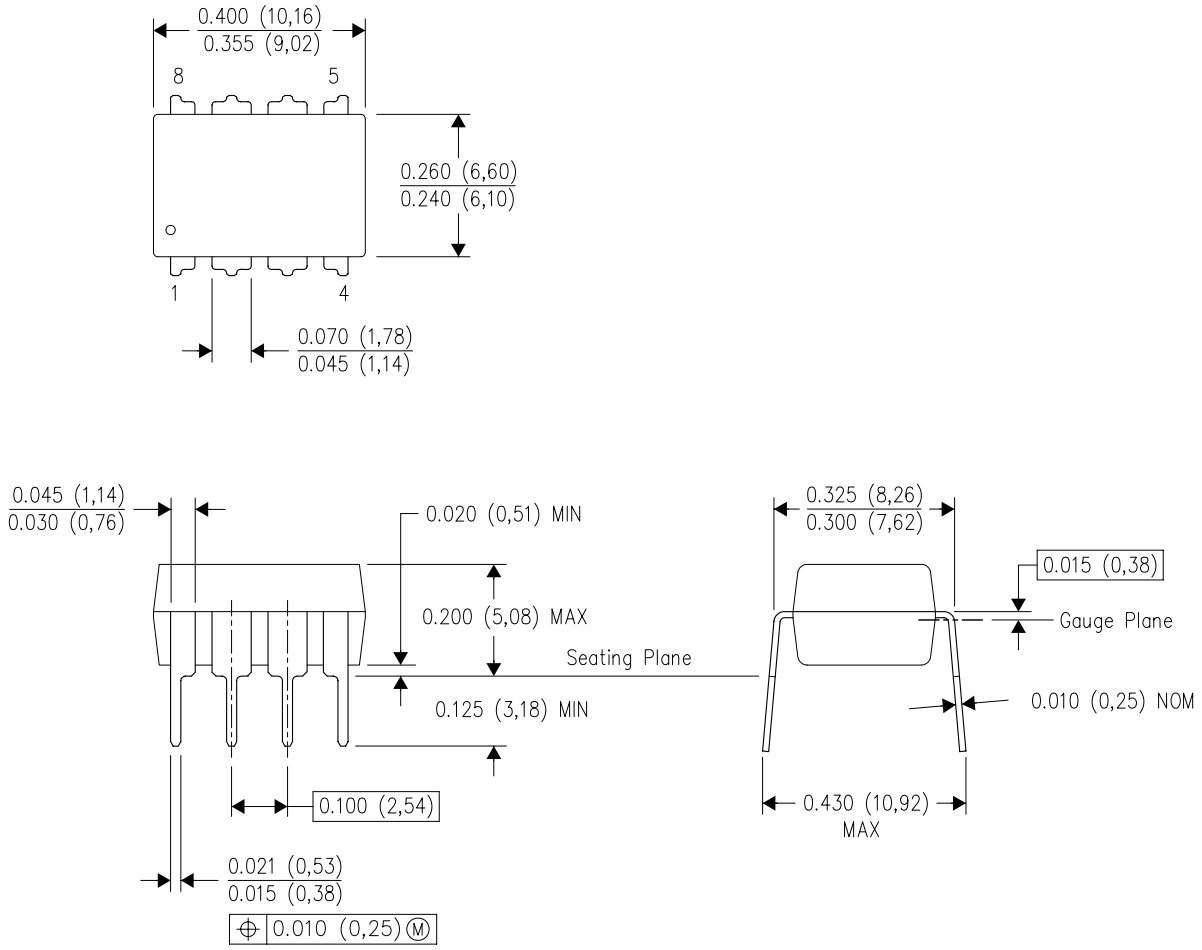

NOTES:
A. All linear dimensions are in inches (millimeters).
B. This drawing is subject to change without notice.
C. Falls within JEDEC MS–001 variation BA.

IMPORTANT NOTICE AND DISCLAIMER

TI PROVIDES TECHNICAL AND RELIABILITY DATA (INCLUDING DATASHEETS), DESIGN RESOURCES (INCLUDING REFERENCE DESIGNS), APPLICATION OR OTHER DESIGN ADVICE, WEB TOOLS, SAFETY INFORMATION, AND OTHER RESOURCES “AS IS” AND WITH ALL FAULTS, AND DISCLAIMS ALL WARRANTIES, EXPRESS AND IMPLIED, INCLUDING WITHOUT LIMITATION ANY IMPLIED WARRANTIES OF MERCHANTABILITY, FITNESS FOR A PARTICULAR PURPOSE OR NON-INFRINGEMENT OF THIRD PARTY INTELLECTUAL PROPERTY RIGHTS.

These resources are intended for skilled developers designing with TI products. You are solely responsible for (1) selecting the appropriate TI products for your application, (2) designing, validating and testing your application, and (3) ensuring your application meets applicable standards, and any other safety, security, regulatory or other requirements.

These resources are subject to change without notice. TI grants you permission to use these resources only for development of an application that uses the TI products described in the resource. Other reproduction and display of these resources is prohibited. No license is granted to any other TI intellectual property right or to any third party intellectual property right. TI disclaims responsibility for, and you fully indemnify TI and its representatives against any claims, damages, costs, losses, and liabilities arising out of your use of these resources.

TI’s products are provided subject to TI’s Terms of Sale, TI’s General Quality Guidelines, or other applicable terms available either on ti.com or provided in conjunction with such TI products. TI’s provision of these resources does not expand or otherwise alter TI’s applicable warranties or warranty disclaimers for TI products. Unless TI explicitly designates a product as custom or customer-specified, TI products are standard, catalog, general purpose devices.

TI objects to and rejects any additional or different terms you may propose.

Copyright © 2026, Texas Instruments Incorporated

Last updated 10/2025