MAX3221E 3V to 5.5V Single-Channel RS-232 Line Driver and Receiver With ±15kV IEC ESD Protection

1 Features

- ESD protection for RS-232 pins
  - ±15kV Human-body model (HBM)
  - ±8kV (IEC 61000-4-2, Contact discharge)
  - ±15kV (IEC 61000-4-2, Air-gap discharge)
- Meets or exceeds the requirements of TIA/EIA-232-F and ITU v.28 standards
- Operates with 3V to 5.5V V_{CC} supply
- Operates up to 250kbit/s
- One driver and one receiver
- Low standby current: 1µA typical
- Accepts 5V logic input with 3.3V supply
- Auto-power-down feature automatically disables drivers for power savings
- Alternative high-speed device (1Mbit/s)
  - SN75C3221E and SN65C3221E

2 Applications

- Industrial PCs
- Wired networking
- Data center and enterprise computing
- Battery-powered systems
- PDAs
- Notebooks
- Laptops
- Palmtop PCs
- Hand-held equipment

3 Description

The MAX3221E is a single driver, single receiver RS-232 solution operating from a single V_{CC} supply. The RS-232 pins provide IEC 61000-4-2 ESD protection. The device meets the requirements of TIA/EIA-232-F and provides the electrical interface between an asynchronous communication controller and the serial-port connector. The charge pump and four small external capacitors allow operation from a single 3V to 5.5V supply. These devices operate at data signaling rates up to 250kbit/s and a maximum of 30V/µs driver output slew rate.

Flexible control options for power management are available. Auto-power down disables driver and charge pump when the receiver is disconnected or the remote driver is power down. The drivers can be manually enabled or disabled. $\overline{\text{INVALID}}$ output goes low when receiver input is unconnected or power off.

Package Information

PART NUMBER	PACKAGE(1)	PACKAGE SIZE(2)
MAX3221E	SSOP (DB, 16)	6.2mm × 7.8mm
	TSSOP (PW, 16)	5mm × 6.4mm
	SOT-23-THN (DYY, 16)	4.2mm × 2mm

(1) For more information, see Section 11.
(2) The package size (length × width) is a nominal value and includes pins, where applicable.

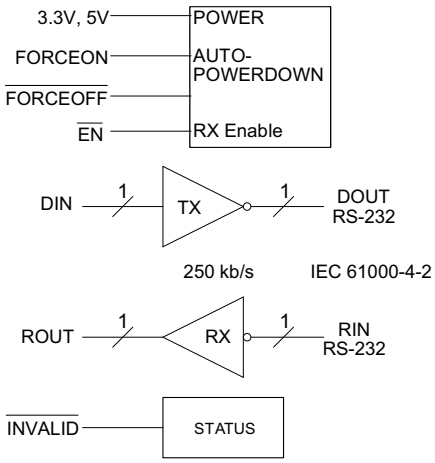

Copyright © 2016, Texas Instruments Incorporated

Block Diagram

An IMPORTANT NOTICE at the end of this data sheet addresses availability, warranty, changes, use in safety-critical applications, intellectual property matters and other important disclaimers. PRODUCTION DATA.

Table of Contents

1 Features....1
2 Applications....1
3 Description....1
4 Pin Configuration and Functions....3
5 Specifications....4
5.1 Absolute Maximum Ratings....4
5.2 ESD Ratings....4
5.3 ESD Ratings - IEC Specifications....4
5.4 Recommended Operating Conditions....5
5.5 Thermal Information....5
5.6 Electrical Characteristics....5
5.7 Electrical Characteristics: Driver....6
5.8 Electrical Characteristics: Receiver....6
5.9 Electrical Characteristics: Auto-Power Down....6
5.10 Switching Characteristics: Driver....7
5.11 Switching Characteristics: Receiver....7
5.12 Switching Characteristics: Auto-Power Down....7
5.13 Typical Characteristics....8
6 Parameter Measurement Information....9
7 Detailed Description....12
7.1 Overview....12
7.2 Functional Block Diagram....12
7.3 Feature Description....12
7.4 Device Functional Modes....13
8 Application and Implementation....14
8.1 Application Information....14
8.2 Typical Application....14
8.3 Power Supply Recommendations....15
8.4 Layout....16
9 Device and Documentation Support....17
9.1 Receiving Notification of Documentation Updates....17
9.2 Support Resources....17
9.3 Trademarks....17
9.4 Electrostatic Discharge Caution....17
9.5 Glossary....17
10 Revision History....17
11 Mechanical, Packaging, and Orderable Information....18

Copyright © 2024 Texas Instruments Incorporated

4 Pin Configuration and Functions

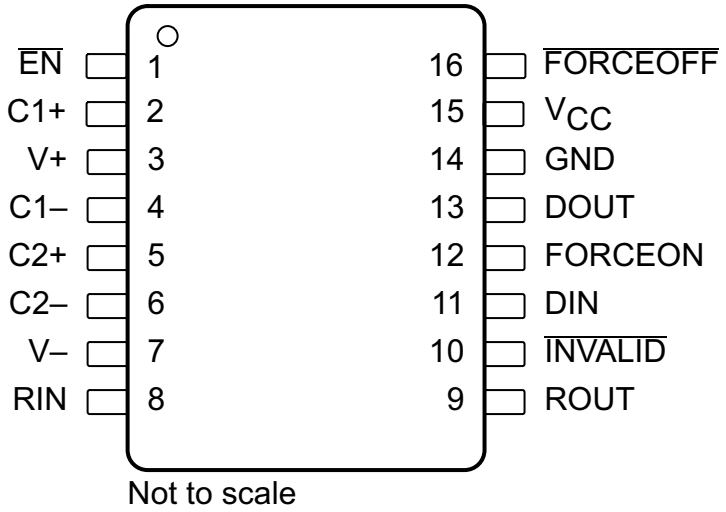

Figure 4-1. DB, PW or DYY Package 16-Pin SSOP, TSSOP, or SOT-23-THN (Top View)

Table 4-1. Pin Functions

PIN		TYPE	DESCRIPTION
NAME	NO.		
C1+	2	—	Positive terminals of the voltage-doubler charge pump capacitors
C2+	5		
C1–	4	—	Negative terminals of the voltage-doubler charge pump capacitors
C2–	6		
DIN	11	I	Driver input
DOUT	13	O	RS-232 driver output
$\overline{\text{EN}}$	1	I	Low input enables receiver ROUT output. High input sets ROUT to high impedance.
$\overline{\text{FORCEOFF}}$	16	I	Automatic power-down control input
FORCEON	12	I	Automatic power-down control input
GND	14	—	Ground
$\overline{\text{INVALID}}$	10	O	Invalid output pin. Output low when RIN input is unpowered.
RIN	8	I	RS-232 receiver input
ROUT	9	O	Receiver output
V_{CC}	15	—	3V to 5.5V supply voltage
V+	3	O	5.5V supply generated by the charge pump
V–	7	O	–5.5V supply generated by the charge pump

Copyright © 2024 Texas Instruments Incorporated

5 Specifications

5.1 Absolute Maximum Ratings

over operating free-air temperature range (unless otherwise noted)[1]

			MIN	MAX	UNIT
V_{CC}	Supply voltage[2]		–0.3	6	V
V+	Positive output supply voltage[2]		–0.3	7	V
V–	Negative output supply voltage[2]		0.3	–7	V
V+ – V–	Supply voltage difference[2]			13	V
V_I	Input voltage	DIN, $\overline{\text{FORCEOFF}}$, FORCEON, $\overline{\text{EN}}$	–0.3	6	V
		RIN	–25	25	
V_O	Output voltage	DOUT	–13.2	13.2	V
		ROUT, $\overline{\text{INVALID}}$	–0.3	V_{CC} + 0.3	
T_J	Operating virtual junction temperature			150	°C
T_{stg}	Storage temperature		–65	150	°C

(1) Operation outside the *Absolute Maximum Ratings* may cause permanent device damage. *Absolute Maximum Ratings* do not imply functional operation of the device at these or any other conditions beyond those listed under *Recommended Operating Conditions*. If used outside the Recommended Operating Conditions but within the *Absolute Maximum Ratings*, the device may not be fully functional, and this may affect device reliability, functionality, performance, and shorten the device lifetime.
(2) All voltages are with respect to network GND.

5.2 ESD Ratings

				VALUE	UNIT
$V_{(ESD)}$	Electrostatic discharge	Human-body model (HBM), per ANSI/ESDA/JEDEC JS-001[1]	Pins 8 and 13	±15000	V
			All other pins	±2000	
		Charged-device model (CDM), per JEDEC specification JESD22-C101[2]	All pins	±1500	

(1) JEDEC document JEP155 states that 500V HBM allows safe manufacturing with a standard ESD control process.
(2) JEDEC document JEP157 states that 250V CDM allows safe manufacturing with a standard ESD control process.

5.3 ESD Ratings - IEC Specifications

			VALUE	UNIT
$V_{(ESD)}$	Electrostatic discharge	IEC 61000-4-2 Contact Discharge, DOUT and RIN [1] [2]	Pins 8 and 13	±8000	V
		IEC 61000-4-2 Air-Gap Discharge, DOUT and RIN [1] [2]		±15000	

(1) A minimum of 1µF capacitor is required between VCC and GND to meet the specified IEC-ESD level.
(2) For optimized IEC ESD performance for DYY package, the recommendation is to have series resistor (≥ 50Ω), on all logic inputs directly connected to power or ground, to minimize the transient currents going into or out of the logic pins.

Copyright © 2024 Texas Instruments Incorporated

5.4 Recommended Operating Conditions

See Figure 8-1 (1)

				MIN	NOM	MAX	UNIT
	Supply voltage		V_{CC} = 3.3V	3	3.3	3.6	V
			V_{CC} = 5V	4.5	5	5.5	
V_{IH}	Driver and control high-level input voltage	DIN, $\overline{\text{FORCEOFF}}$, FORCEON, $\overline{\text{EN}}$	V_{CC} = 3.3V	2			V
			V_{CC} = 5V	2.4			
V_{IL}	Driver and control low-level input voltage	DIN, $\overline{\text{FORCEOFF}}$, FORCEON, $\overline{\text{EN}}$				0.8	V
V_I	Driver and control input voltage	DIN, $\overline{\text{FORCEOFF}}$, FORCEON		0		5.5	V
V_I	Receiver input voltage			–25		25	V
T_A	Operating free-air temperature	MAX3221EC		0		70	°C
		MAX3221EI		–40		85	

(1) Test conditions are C1–C4 = 0.1µF at V_{CC} = 3.3V ± 0.3V; C1 = 0.047µF, C2–C4 = 0.33µF at V_{CC} = 5V ± 0.5V.

5.5 Thermal Information

THERMAL METRIC(1)		MAX3221E			UNIT
		DB (SSOP)	PW (TSSOP)	DYY (SOT-23-THN)	
		16 PINS	16 PINS	16 PINS	
$R_{\theta JA}$	Junction-to-ambient thermal resistance	105.8	110.9	120.0	°C/W
$R_{\theta JC(top)}$	Junction-to-case (top) thermal resistance	51.9	41.7	56.8	°C/W
$R_{\theta JB}$	Junction-to-board thermal resistance	57.6	57.2	51.3	°C/W
ψ_{JT}	Junction-to-top characterization parameter	14.1	4.2	2.6	°C/W
ψ_{JB}	Junction-to-board characterization parameter	56.8	56.6	50.9	°C/W

(1) For more information about traditional and new thermal metrics, see the *Semiconductor and IC Package Thermal Metrics* application report.

5.6 Electrical Characteristics

over recommended ranges of supply voltage and operating free-air temperature (unless otherwise noted)(2)

PARAMETER			TEST CONDITIONS		MIN	TYP(1)	MAX	UNIT
I_I	Input leakage current	$\overline{\text{FORCEOFF}}$, FORCEON, $\overline{\text{EN}}$				±0.01	±1	µA
I_{CC}	Supply current	Auto-power down disabled	V_{CC} = 3.3V or 5V, T_A = 25°C	No load, $\overline{\text{FORCEOFF}}$ and FORCEON at V_{CC}		0.3	1	mA
		Powered off		No load, $\overline{\text{FORCEOFF}}$ at GND		1	10	µA
		Auto-power down enabled		No load, $\overline{\text{FORCEOFF}}$ at V_{CC}, FORCEON at GND, All RIN are open or grounded		1	10	

(1) All typical values are at V_{CC} = 3.3V or V_{CC} = 5V, and T_A = 25°C.
(2) Test conditions are C1–C4 = 0.1µF at V_{CC} = 3.3V ± 0.3V; C1 = 0.047µF, C2–C4 = 0.33µF at V_{CC} = 5V ± 0.5V.

Copyright © 2024 Texas Instruments Incorporated

5.7 Electrical Characteristics: Driver

over recommended ranges of supply voltage and operating free-air temperature (unless otherwise noted)[3]

PARAMETER		TEST CONDITIONS			MIN	TYP[1]	MAX	UNIT
V_{OH}	High-level output voltage	DOUT at R_L = 3kΩ to GND,	DIN = GND		5	5.4		V
V_{OL}	Low-level output voltage	DOUT at R_L = 3kΩ to GND,	DIN = V_{CC}		–5	–5.4		V
I_{IH}	High-level input current	$V_I = V_{CC}$				±0.01	±1	μA
I_{IL}	Low-level input current	V_I = GND				±0.01	±1	μA
I_{OS}	Short-circuit output current[2]	V_{CC} = 3.6V,	V_O = 0V			±35	±60	mA
		V_{CC} = 5.5V,	V_O = 0V			±35	±60	
r_o	Output resistance	V_{CC}, V+, and V– = 0V,	V_O = ±2V		300	10M		Ω
I_{off}	Output leakage current	$\overline{FORCEOFF}$ = GND	V_O = ±12V,	V_{CC} = 3V to 3.6V			±25	μA
			V_O = ±10V,	V_{CC} = 4.5V to 5.5V			±25	

(1) All typical values are at V_{CC} = 3.3V or V_{CC} = 5V, and T_A = 25°C.
(2) Short-circuit durations should be controlled to prevent exceeding the device absolute power-dissipation ratings, and not more than one output should be shorted at a time.
(3) Test conditions are C1–C4 = 0.1μF at V_{CC} = 3.3V ± 0.3V; C1 = 0.047μF, C2–C4 = 0.33μF at V_{CC} = 5V ± 0.5V.

5.8 Electrical Characteristics: Receiver

over recommended ranges of supply voltage and operating free-air temperature (unless otherwise noted)[2]

PARAMETER		TEST CONDITIONS	MIN	TYP[1]	MAX	UNIT
V_{OH}	High-level output voltage	I_{OH} = –1mA	V_{CC} – 0.6	V_{CC} – 0.1		V
V_{OL}	Low-level output voltage	I_{OL} = 1.6mA			0.4	V
V_{IT+}	Positive-going input threshold voltage	V_{CC} = 3.3V		1.6	2.4	V
		V_{CC} = 5V		1.9	2.4	
V_{IT-}	Negative-going input threshold voltage	V_{CC} = 3.3V	0.6	1.1		V
		V_{CC} = 5V	0.8	1.4		
V_{hys}	Input hysteresis (V_{IT+} – V_{IT-})			0.5		V
I_{off}	Output leakage current	$\overline{EN} = V_{CC}$		±0.05	±10	μA
r_i	Input resistance	V_I = ±3V to ±25V	3	5	7	kΩ

(1) All typical values are at V_{CC} = 3.3V or V_{CC} = 5V, and T_A = 25°C.
(2) Test conditions are C1–C4 = 0.1μF at V_{CC} = 3.3V ± 0.3V; C1 = 0.047μF, C2–C4 = 0.33μF at V_{CC} = 5V ± 0.5V.

5.9 Electrical Characteristics: Auto-Power Down

over recommended ranges of supply voltage and operating free-air temperature (unless otherwise noted)

PARAMETER		TEST CONDITIONS		MIN	MAX	UNIT
$V_{T+(valid)}$	Receiver input threshold for $\overline{INVALID}$ high-level output voltage	FORCEON = GND,	$\overline{FORCEOFF} = V_{CC}$		2.7	V
$V_{T-(valid)}$	Receiver input threshold for $\overline{INVALID}$ high-level output voltage	FORCEON = GND,	$\overline{FORCEOFF} = V_{CC}$	–2.7		V
$V_{T(invalid)}$	Receiver input threshold for I $\overline{NVALID}$ low-level output voltage	FORCEON = GND,	$\overline{FORCEOFF} = V_{CC}$	–0.3	0.3	V
V_{OH}	$\overline{INVALID}$ high-level output voltage	I_{OH} = –1mA, FORCEON = GND, $\overline{FORCEOFF} = V_{CC}$		V_{CC} – 0.6		V
V_{OL}	$\overline{INVALID}$ low-level output voltage	I_{OL} = 1.6mA, FORCEON = GND, $\overline{FORCEOFF} = V_{CC}$			0.4	V

Copyright © 2024 Texas Instruments Incorporated

5.10 Switching Characteristics: Driver

over recommended ranges of supply voltage and operating free-air temperature (unless otherwise noted)[3]

PARAMETER		TEST CONDITIONS		MIN	TYP[1]	MAX	UNIT
	Maximum data rate	C_L = 1000pF,	R_L = 3kΩ,	150	250		kbit/s
$t_{sk(p)}$	Pulse skew[2]	C_L = 150pF to 2500pF,	R_L = 3kΩ to 7kΩ, See Figure 6-2		100		ns
SR(tr)	Slew rate, transition region (see Figure 6-1)	V_{CC} = 3.3V, R_L = 3kΩ to 7kΩ	C_L = 150pF to 1000pF	6		30	V/µs
			C_L = 150pF to 2500pF	4		30	

(1) All typical values are at V_{CC} = 3.3V or V_{CC} = 5V, and T_A = 25°C.
(2) Pulse skew is defined as $|t_{PLH} - t_{PHL}|$ of each channel of the same device.
(3) Test conditions are C1–C4 = 0.1µF at V_{CC} = 3.3V ± 0.3V; C1 = 0.047µF, C2–C4 = 0.33µF at V_{CC} = 5V ± 0.5V.

5.11 Switching Characteristics: Receiver

over recommended ranges of supply voltage and operating free-air temperature (unless otherwise noted)[3]

PARAMETER		TEST CONDITIONS	TYP[1]	UNIT
t_{PLH}	Propagation delay time, low- to high-level output	C_L = 150pF, See Figure 6-3	150	ns
t_{PHL}	Propagation delay time, high- to low-level output	C_L = 150pF, See Figure 6-3	150	ns
t_{en}	Output enable time	C_L = 150pF, R_L = 3kΩ, See Figure 6-4	200	ns
t_{dis}	Output disable time	C_L = 150pF, R_L = 3kΩ, See Figure 6-4	200	ns
$t_{sk(p)}$	Pulse skew[2]	See Figure 6-3	50	ns

(1) All typical values are at V_{CC} = 3.3V or V_{CC} = 5V, and T_A = 25°C.
(2) Pulse skew is defined as $|t_{PLH} - t_{PHL}|$ of each channel of the same device.
(3) Test conditions are C1–C4 = 0.1µF at V_{CC} = 3.3V ± 0.3V; C1 = 0.047µF, C2–C4 = 0.33µF at V_{CC} = 5V ± 0.5V.

5.12 Switching Characteristics: Auto-Power Down

over recommended ranges of supply voltage and operating free-air temperature (unless otherwise noted)

PARAMETER		TYP[1]	UNIT
t_{valid}	Propagation delay time, low- to high-level output	1	µs
$t_{invalid}$	Propagation delay time, high- to low-level output	30	µs
t_{en}	Supply enable time	100	µs

(1) All typical values are at V_{CC} = 3.3V or V_{CC} = 5V, and T_A = 25°C.

Copyright © 2024 Texas Instruments Incorporated

5.13 Typical Characteristics

T_A = 25°C; V_{CC} = 3.3V

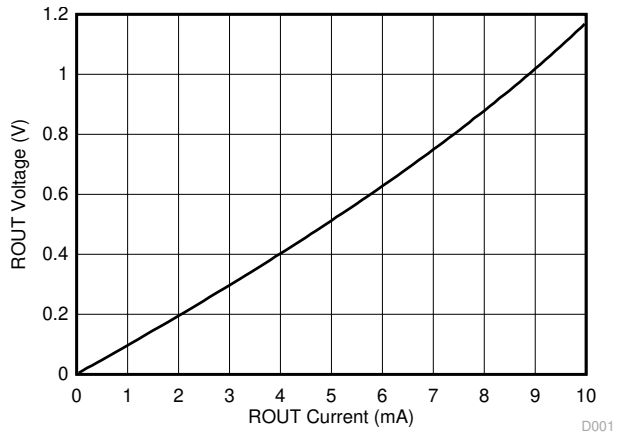

Figure 5-1. Receiver VOL vs Load Current

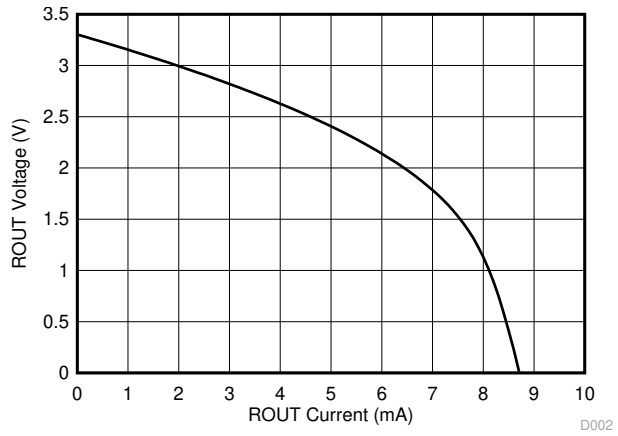

Figure 5-2. Receiver VOH vs Load Current

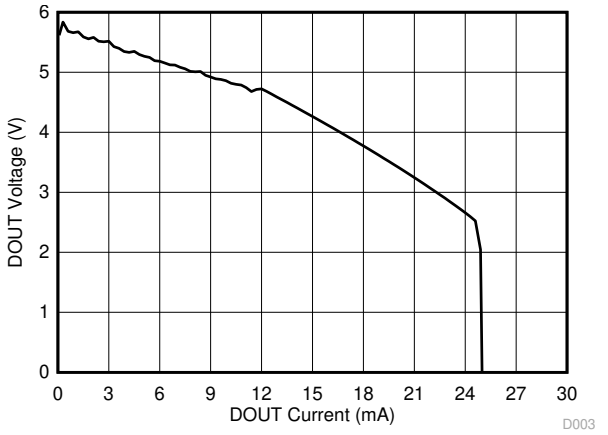

Figure 5-3. Driver VOH vs Load Current

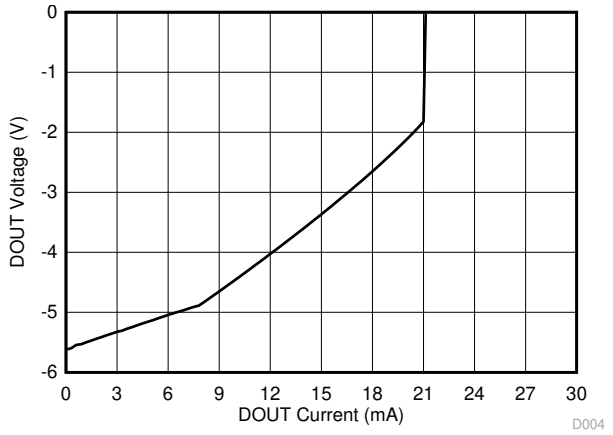

Figure 5-4. Driver VOL vs Load Current

Copyright © 2024 Texas Instruments Incorporated

6 Parameter Measurement Information

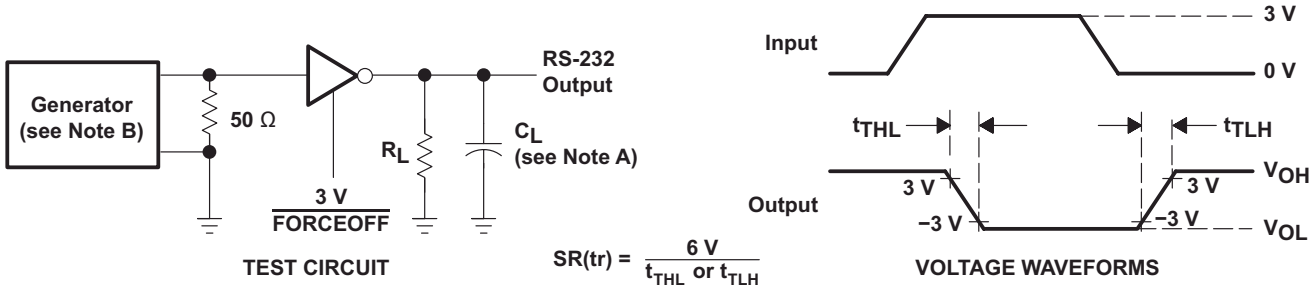

A. C_L includes probe and jig capacitance.

B. The pulse generator has the following characteristics: PRR = 250kbps, Z_O = 50Ω, 50% duty cycle, t_r ≤ 10ns, t_f ≤ 10ns.

Figure 6-1. Driver Slew Rate

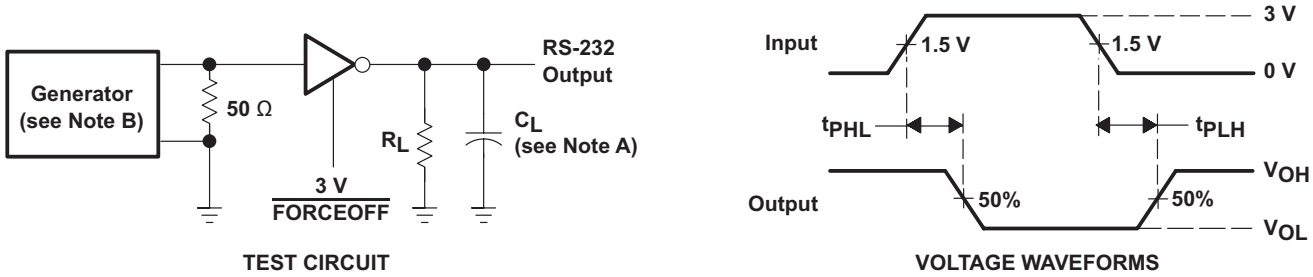

A. C_L includes probe and jig capacitance.

B. The pulse generator has the following characteristics: PRR = 250kbps, Z_O = 50Ω, 50% duty cycle, t_r ≤ 10ns, t_f ≤ 10ns.

Figure 6-2. Driver Pulse Skew

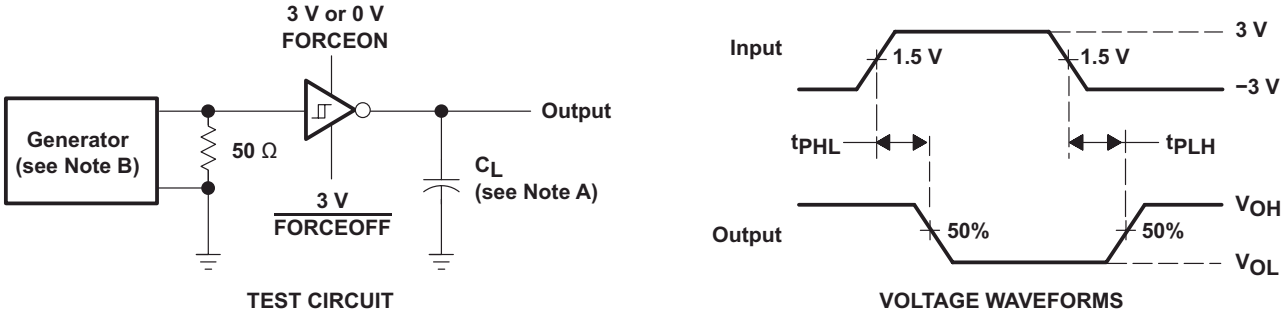

A. C_L includes probe and jig capacitance.

B. The pulse generator has the following characteristics: Z_O = 50Ω, 50% duty cycle, t_r ≤ 10ns, t_f ≤ 10ns.

Figure 6-3. Receiver Propagation Delay Times

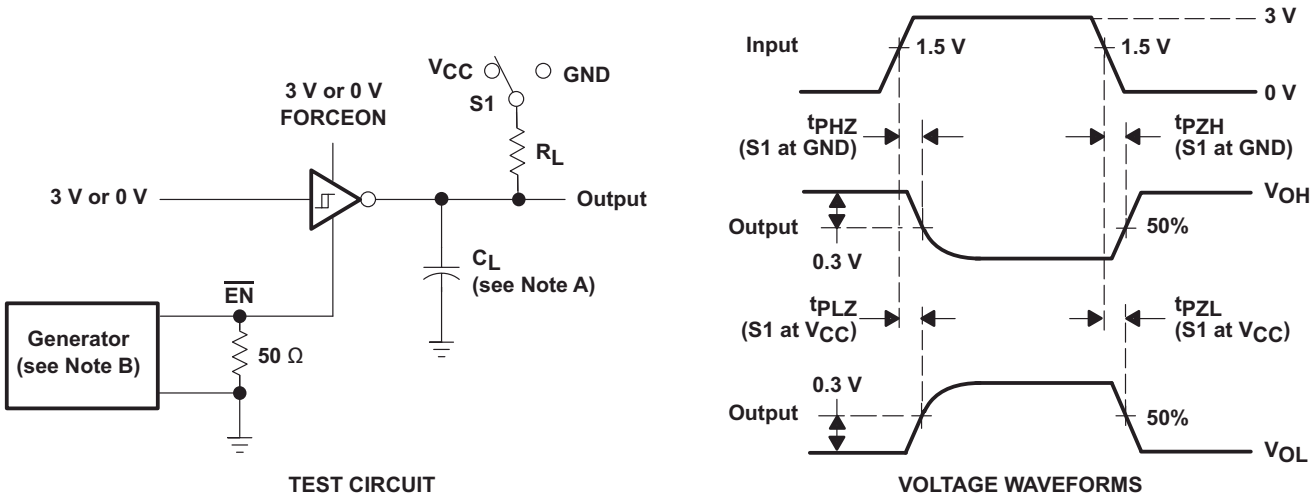

A. C_L includes probe and jig capacitance.
B. The pulse generator has the following characteristics: Z_O = 50Ω, 50% duty cycle, t_r ≤ 10ns, t_f ≤ 10ns.
C. t_{PLZ} and t_{PHZ} are the same as t_{dis}.
D. t_{PZL} and t_{PZH} are the same as t_{en}.

Figure 6-4. Receiver Enable and Disable Times

Copyright © 2024 Texas Instruments Incorporated

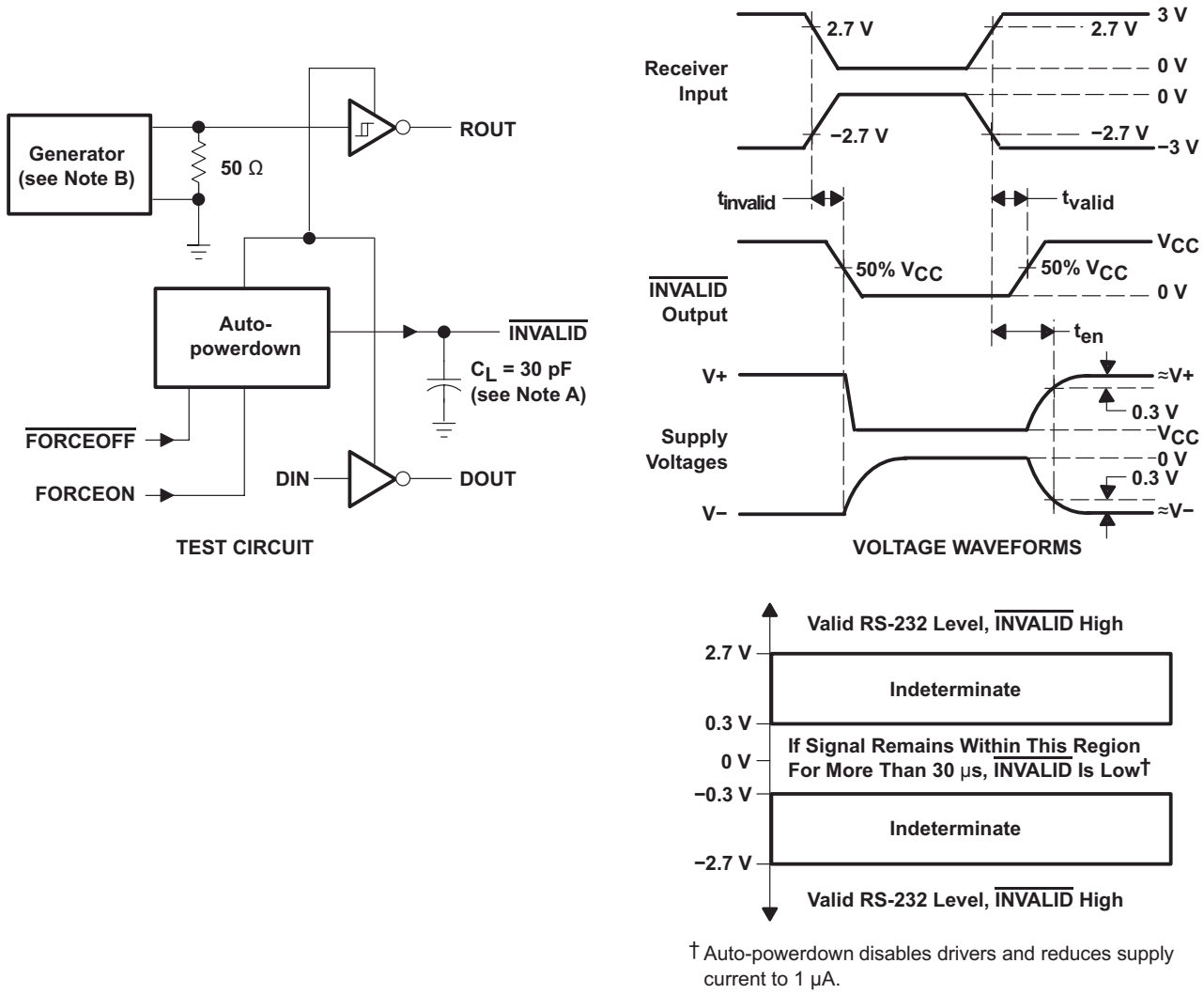

† Auto-powerdown disables drivers and reduces supply current to 1 µA.

Figure 6-5. $\overline{\text{INVALID}}$ Propagation Delay Times and Driver Enabling Time

7 Detailed Description

7.1 Overview

The MAX3221E is a single driver, single receiver RS-232 solution operating from a single V_{CC} supply. The RS-232 pins provide IEC 61000-4-2 ESD protection. The device meets the requirements of TIA/EIA-232-F and provides the electrical interface between an asynchronous communication controller and the serial-port connector. The charge pump and four small external capacitors allow operation from a single 3V to 5.5V supply. These devices operate at data signaling rates up to 250kbit/s and a maximum of 30V/µs driver output slew rate.

Flexible control options for power management are available when the serial port is inactive. The auto-power-down feature functions when FORCEON is low and $\overline{\text{FORCEOFF}}$ is high. During this mode of operation, if the device does not sense a valid RS-232 signal on the receiver input, the driver output is disabled. If $\overline{\text{FORCEOFF}}$ is set low and $\overline{\text{EN}}$ is high, both the driver and receiver are shut off, and the supply current is reduced to 1 µA. Disconnecting the serial port or turning off the peripheral drivers causes the auto-power-down condition to occur. Auto-power down can be disabled when FORCEON and $\overline{\text{FORCEOFF}}$ are high. With auto-power down enabled, the device is activated automatically when a valid signal is applied to the receiver input. The $\overline{\text{INVALID}}$ output notifies the user if an RS-232 signal is present at the receiver input. $\overline{\text{INVALID}}$ is high (valid data) if the receiver input voltage is greater than 2.7V or less than –2.7V, or has been between –0.3V and 0.3V for less than 30µs. $\overline{\text{INVALID}}$ is low (invalid data) if the receiver input voltage is between –0.3V and 0.3V for more than 30µs. See Figure 6-1 for receiver input levels.

7.2 Functional Block Diagram

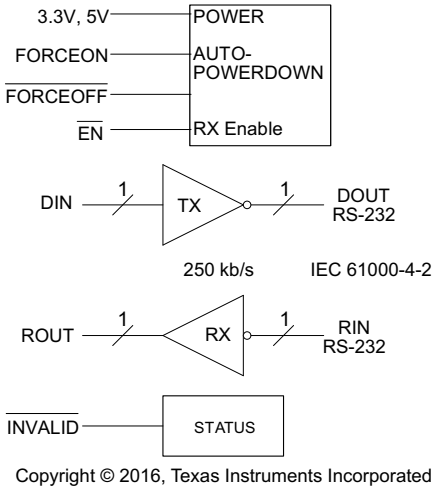

Figure 7-1. Logic Diagram (Positive Logic)

7.3 Feature Description

7.3.1 Power

The power block increases, inverts, and regulates voltage at V+ and V- pins using a charge pump that requires four external capacitors. Auto-power-down feature for driver is controlled by FORCEON and $\overline{\text{FORCEOFF}}$ inputs. Receiver is controlled by $\overline{\text{EN}}$ input. When unpowered, the MAX3221E can be safely connected to an active remote RS-232 device.

7.3.2 RS-232 Driver

One driver interfaces standard logic levels to RS-232 levels. DIN input must be valid high or low.

Copyright © 2024 Texas Instruments Incorporated

7.3.3 RS-232 Receiver

One receiver interfaces RS-232 levels to standard logic levels. An open input results in a high output on ROUT. RIN input includes an internal standard RS-232 load. A logic high input on the $\overline{EN}$ pin shuts down the receiver output.

7.3.4 RS-232 Status

The $\overline{INVALID}$ output goes low when RIN input is unpowered for more than 30µs. The $\overline{INVALID}$ output goes high when receiver has a valid input. The $\overline{INVALID}$ output is active when V_{CC} is powered irregardless of FORCEON and $\overline{FORCEOFF}$ inputs (see Table 7-3).

7.4 Device Functional Modes

Table 7-1, Table 7-2, and Table 7-3 show the behavior of the driver, receiver, and $\overline{INVALID}$ features under all possible relevant combinations of inputs.

Table 7-1. Function Tables Each Driver (1)

INPUTS				OUTPUT DOUT	DRIVER STATUS
DIN	FORCEON	$\overline{FORCEOFF}$	VALID RIN RS-232 LEVEL		
X	X	L	X	Z	Powered off
L	H	H	X	H	Normal operation with auto-power down disabled
H	H	H	X	L	
L	L	H	Yes	H	Normal operation with auto-power down enabled
H	L	H	Yes	L	
L	L	H	No	Z	Powered off by auto-power down feature
H	L	H	No	Z	

(1) H = high level, L = low level, X = irrelevant, Z = high impedance

Table 7-2. Each Receiver (1)

INPUTS			OUTPUT ROUT
RIN	$\overline{EN}$	VALID RIN RS-232 LEVEL	
L	L	X	H
H	L	X	L
X	H	X	Z
Open	L	No	H

(1) H = high level, L = low level, X = irrelevant, Z = high impedance (off), Open = disconnected input or connected driver off

Table 7-3. $\overline{INVALID}$ (1)

INPUTS				OUTPUT
RIN	FORCEON	$\overline{FORCEOFF}$	$\overline{EN}$	$\overline{INVALID}$
L	X	X	X	H
H	X	X	X	H
Open	X	X	X	L

(1) H = high level, L = low level, X = irrelevant, Z = high impedance (off), Open = input disconnected or connected driver off

8 Application and Implementation

Note

Information in the following applications sections is not part of the TI component specification, and TI does not warrant its accuracy or completeness. TI's customers are responsible for determining suitability of components for their purposes, as well as validating and testing their design implementation to confirm system functionality.

8.1 Application Information

The MAX3221E line driver and receiver is a specialized device for 3V to 5.5V RS-232 communication applications. This application is a generic implementation of this device with all required external components. For proper operation, add capacitors as shown in Figure 8-1.

8.2 Typical Application

ROUT and DIN connect to UART or general purpose logic lines. FORCEON and $\overline{\text{FORCEOFF}}$ may be connected general purpose logic lines or tied to ground or V_{CC}. $\overline{\text{INVALID}}$ may be connected to a general purpose logic line or left unconnected. RIN and DOUT lines connect to a RS-232 connector or cable. DIN, FORCEON, and $\overline{\text{FORCEOFF}}$ inputs must not be left unconnected.

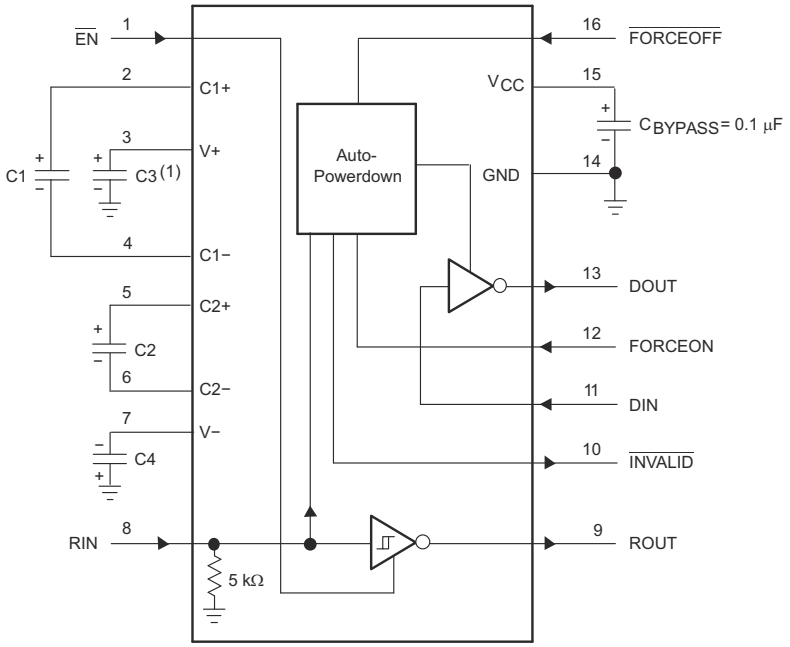

(1) C3 can be connected to V_{CC} or GND.
NOTES: A. Resistor values shown are nominal.
B. Nonpolarized ceramic capacitors are acceptable. If polarized tantalum or electrolytic capacitors are used, they should be connected as shown.

V_{CC} vs CAPACITOR VALUES

V_{CC}	C1	C2, C3, and C4
3.3 V ± 0.3 V	0.1 µF	0.1 µF
5 V ± 0.5 V	0.047 µF	0.33 µF
3 V to 5.5 V	0.1 µF	0.47 µF

Copyright © 2016, Texas Instruments Incorporated

Figure 8-1. Typical Operating Circuit and Capacitor Values

Copyright © 2024 Texas Instruments Incorporated

8.2.1 Design Requirements

- Recommended V_{CC} is 3.3V or 5V.
  - 3V to 5.5V is also possible
- Maximum recommended bit rate is 250kbps.
- Use capacitors as shown in Figure 8-1.

8.2.2 Detailed Design Procedure

- DIN, $\overline{\text{FORCEOFF}}$ and FORCEON inputs must be connected to valid low or high logic levels.
- Select capacitor values based on VCC level for best performance.

8.2.3 Application Curves

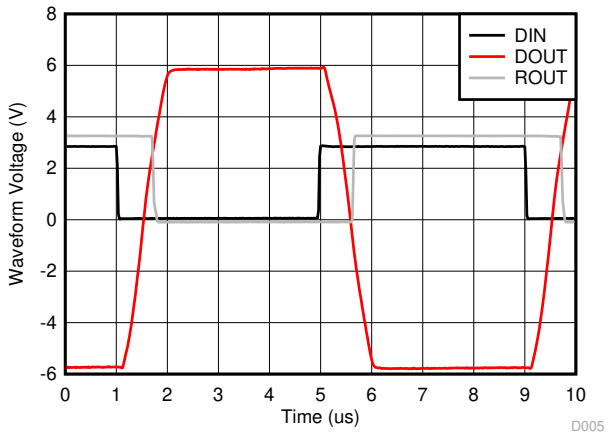

Figure 8-2. Loopback Waveforms V_{CC} = 3.3V, Data Rate 250kbit/s

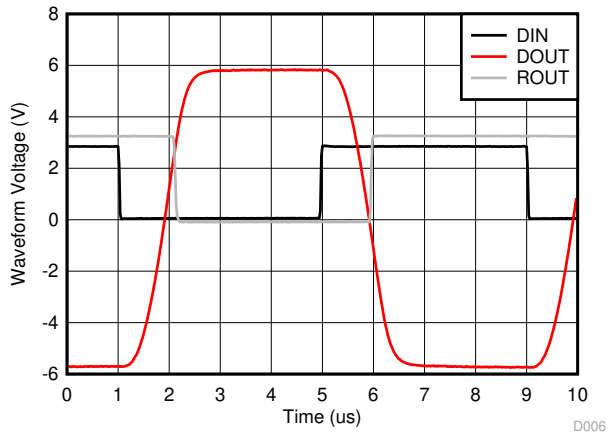

Figure 8-3. Loopback Waveforms with 1nF load V_{CC} = 3.3V, Data Rate 250kbit/s

8.3 Power Supply Recommendations

TI recommends a 0.1µF capacitor to filter noise on the power supply pin. For additional filter capability, a 0.01µF capacitor may be added in parallel as well. Power supply input voltage is recommended to be any valid level in *Section 5.4*.

8.4 Layout

8.4.1 Layout Guidelines

Keep the external capacitor traces short. This is more important on C1 and C2 nodes that have the fastest rise and fall times. Make the impedance from MAX3221E ground pin and the circuit board ground plane as low as possible for best ESD performance. Use wide metal and multiple vias on both sides of ground pin.

8.4.2 Layout Example

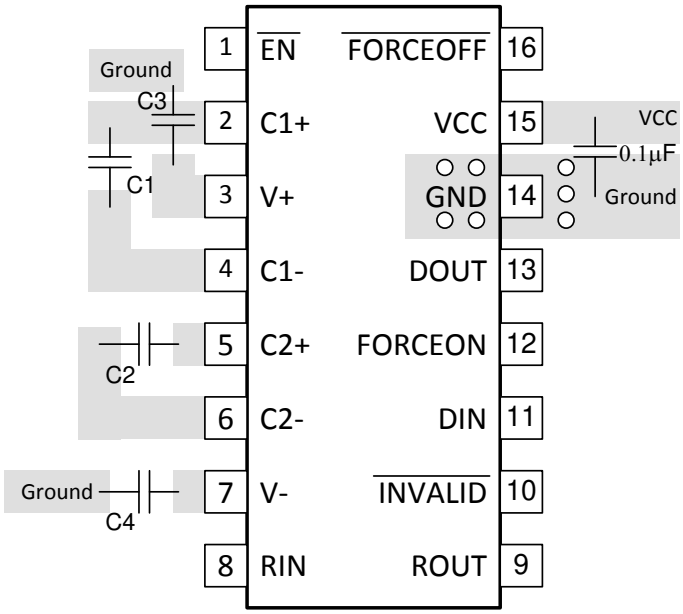

Figure 8-4. MAX3221E Layout Example

Copyright © 2024 Texas Instruments Incorporated

9 Device and Documentation Support

9.1 Receiving Notification of Documentation Updates

To receive notification of documentation updates, navigate to the device product folder on ti.com. Click on *Notifications* to register and receive a weekly digest of any product information that has changed. For change details, review the revision history included in any revised document.

9.2 Support Resources

TI E2E™ support forums are an engineer's go-to source for fast, verified answers and design help — straight from the experts. Search existing answers or ask your own question to get the quick design help you need.

Linked content is provided "AS IS" by the respective contributors. They do not constitute TI specifications and do not necessarily reflect TI's views; see TI's Terms of Use.

9.3 Trademarks

TI E2E™ is a trademark of Texas Instruments.
All trademarks are the property of their respective owners.

9.4 Electrostatic Discharge Caution

This integrated circuit can be damaged by ESD. Texas Instruments recommends that all integrated circuits be handled with appropriate precautions. Failure to observe proper handling and installation procedures can cause damage.

ESD damage can range from subtle performance degradation to complete device failure. Precision integrated circuits may be more susceptible to damage because very small parametric changes could cause the device not to meet its published specifications.

9.5 Glossary

TI Glossary	This glossary lists and explains terms, acronyms, and definitions.

10 Revision History

NOTE: Page numbers for previous revisions may differ from page numbers in the current version.

Changes from Revision D (July 2024) to Revision E (December 2024)	Page
• Added the SOT-23-THN (DYY) package to the data sheet	1
• Added Note 2 to the *ESD ratings - IEC Specifications*	4

Changes from Revision C (July 2021) to Revision D (July 2024)	Page
• Changed the *Device Information* table to the *Package Information* table	1
• Changed Pins 8 and 11 to Pins 8 and 13 in the *ESD Ratings*	4
• Changed Pins 8 and 11 to Pins 8 and 13 in the *ESD ratings - IEC Specifications*	4

Changes from Revision B (March 2016) to Revision C (July 2021)	Page
• Changed the *Applications* list	1
• Added *ESD ratings IEC Specifications* table and added a table note for the minimum requirement to meet the IEC ESD level	4
• Changed values in the *Thermal Information* table for DB and PW packages	5

Changes from Revision A (May 2006) to Revision B (March 2016) **Page**

- Added *ESD Ratings* table, *Feature Description* section, *Device Functional Modes*, *Application and Implementation* section, *Power Supply Recommendations* section, *Layout* section, *Device and Documentation Support* section, and *Mechanical, Packaging, and Orderable Information* section 1
- Deleted *Ordering Information* table; see the POA at the end of the data sheet 1
- Changed $R_{\theta JA}$ thermal values: 82 to 92 for DB package and 108 to 100.3 for PW Package..... 5

11 Mechanical, Packaging, and Orderable Information

The following pages include mechanical, packaging, and orderable information. This information is the most current data available for the designated devices. This data is subject to change without notice and revision of this document. For browser-based versions of this data sheet, refer to the left-hand navigation.

Copyright © 2024 Texas Instruments Incorporated

PACKAGING INFORMATION

Orderable part number	Status (1)	Material type (2)	Package | Pins	Package qty | Carrier	RoHS (3)	Lead finish/ Ball material (4)	MSL rating/ Peak reflow (5)	Op temp (°C)	Part marking (6)
MAX3221ECDBR	Active	Production	SSOP (DB) | 16	2000 | LARGE T&R	Yes	NIPDAU	Level-1-260C-UNLIM	0 to 70	MP221EC
MAX3221ECDBR.A	Active	Production	SSOP (DB) | 16	2000 | LARGE T&R	Yes	NIPDAU	Level-1-260C-UNLIM	0 to 70	MP221EC
MAX3221ECDBRG4	Active	Production	SSOP (DB) | 16	2000 | LARGE T&R	Yes	NIPDAU	Level-1-260C-UNLIM	0 to 70	MP221EC
MAX3221ECPWR	Active	Production	TSSOP (PW) | 16	2000 | LARGE T&R	Yes	NIPDAU | SN	Level-1-260C-UNLIM	0 to 70	MP221EC
MAX3221ECPWR.A	Active	Production	TSSOP (PW) | 16	2000 | LARGE T&R	Yes	NIPDAU	Level-1-260C-UNLIM	0 to 70	MP221EC
MAX3221ECPWRG4	Active	Production	TSSOP (PW) | 16	2000 | LARGE T&R	Yes	NIPDAU	Level-1-260C-UNLIM	-40 to 85	MP221EC
MAX3221ECPWRG4.A	Active	Production	TSSOP (PW) | 16	2000 | LARGE T&R	Yes	NIPDAU	Level-1-260C-UNLIM	-40 to 85	MP221EC
MAX3221EIDBR	Active	Production	SSOP (DB) | 16	2000 | LARGE T&R	Yes	NIPDAU	Level-1-260C-UNLIM	-40 to 85	MP221EI
MAX3221EIDBR.A	Active	Production	SSOP (DB) | 16	2000 | LARGE T&R	Yes	NIPDAU	Level-1-260C-UNLIM	-40 to 85	MP221EI
MAX3221EIDBRG4	Active	Production	SSOP (DB) | 16	2000 | LARGE T&R	Yes	NIPDAU	Level-1-260C-UNLIM	-40 to 85	MP221EI
MAX3221EIDYYR	Active	Production	SOT-23-THIN (DYY) | 16	3000 | LARGE T&R	Yes	NIPDAU	Level-1-260C-UNLIM	-40 to 85	MP221EI
MAX3221EIDYYR.A	Active	Production	SOT-23-THIN (DYY) | 16	3000 | LARGE T&R	Yes	NIPDAU	Level-1-260C-UNLIM	-40 to 85	MP221EI
MAX3221EIPWR	Active	Production	TSSOP (PW) | 16	2000 | LARGE T&R	Yes	NIPDAU | SN	Level-1-260C-UNLIM	-40 to 85	MP221EI
MAX3221EIPWR.A	Active	Production	TSSOP (PW) | 16	2000 | LARGE T&R	Yes	NIPDAU	Level-1-260C-UNLIM	-40 to 85	MP221EI
MAX3221EIPWRG4	Active	Production	TSSOP (PW) | 16	2000 | LARGE T&R	Yes	NIPDAU	Level-1-260C-UNLIM	-40 to 85	MP221EI
MAX3221EIPWRG4.A	Active	Production	TSSOP (PW) | 16	2000 | LARGE T&R	Yes	NIPDAU	Level-1-260C-UNLIM	-40 to 85	MP221EI

(1) **Status:** For more details on status, see our product life cycle.

(2) **Material type:** When designated, preproduction parts are prototypes/experimental devices, and are not yet approved or released for full production. Testing and final process, including without limitation quality assurance, reliability performance testing, and/or process qualification, may not yet be complete, and this item is subject to further changes or possible discontinuation. If available for ordering, purchases will be subject to an additional waiver at checkout, and are intended for early internal evaluation purposes only. These items are sold without warranties of any kind.

(3) **RoHS values:** Yes, No, RoHS Exempt. See the TI RoHS Statement for additional information and value definition.

(4) **Lead finish/Ball material:** Parts may have multiple material finish options. Finish options are separated by a vertical ruled line. Lead finish/Ball material values may wrap to two lines if the finish value exceeds the maximum column width.

(5) **MSL rating/Peak reflow:** The moisture sensitivity level ratings and peak solder (reflow) temperatures. In the event that a part has multiple moisture sensitivity ratings, only the lowest level per JEDEC standards is shown. Refer to the shipping label for the actual reflow temperature that will be used to mount the part to the printed circuit board.

(6) **Part marking:** There may be an additional marking, which relates to the logo, the lot trace code information, or the environmental category of the part.

Multiple part markings will be inside parentheses. Only one part marking contained in parentheses and separated by a "~" will appear on a part. If a line is indented then it is a continuation of the previous line and the two combined represent the entire part marking for that device.

Important Information and Disclaimer: The information provided on this page represents TI's knowledge and belief as of the date that it is provided. TI bases its knowledge and belief on information provided by third parties, and makes no representation or warranty as to the accuracy of such information. Efforts are underway to better integrate information from third parties. TI has taken and continues to take reasonable steps to provide representative and accurate information but may not have conducted destructive testing or chemical analysis on incoming materials and chemicals. TI and TI suppliers consider certain information to be proprietary, and thus CAS numbers and other limited information may not be available for release.

In no event shall TI's liability arising out of such information exceed the total purchase price of the TI part(s) at issue in this document sold by TI to Customer on an annual basis.

TAPE AND REEL INFORMATION

REEL DIMENSIONS

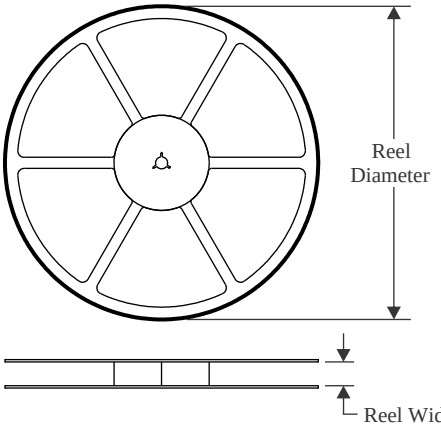

TAPE DIMENSIONS

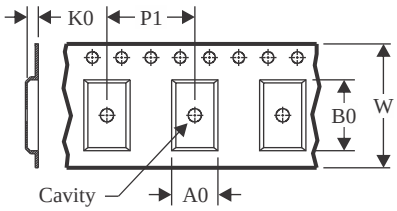

A0	Dimension designed to accommodate the component width
B0	Dimension designed to accommodate the component length
K0	Dimension designed to accommodate the component thickness
W	Overall width of the carrier tape
P1	Pitch between successive cavity centers

QUADRANT ASSIGNMENTS FOR PIN 1 ORIENTATION IN TAPE

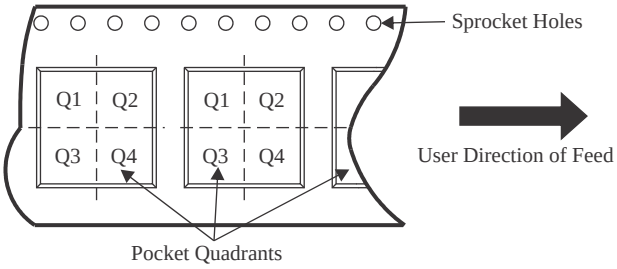

*All dimensions are nominal

Device	Package Type	Package Drawing	Pins	SPQ	Reel Diameter (mm)	Reel Width W1 (mm)	A0 (mm)	B0 (mm)	K0 (mm)	P1 (mm)	W (mm)	Pin1 Quadrant
MAX3221ECDBR	SSOP	DB	16	2000	330.0	16.4	8.35	6.6	2.4	12.0	16.0	Q1
MAX3221ECPWR	TSSOP	PW	16	2000	330.0	12.4	6.9	5.6	1.6	8.0	12.0	Q1
MAX3221ECPWR	TSSOP	PW	16	2000	330.0	12.4	6.9	5.6	1.6	8.0	12.0	Q1
MAX3221ECPWRG4	TSSOP	PW	16	2000	330.0	12.4	6.9	5.6	1.6	8.0	12.0	Q1
MAX3221EIDBR	SSOP	DB	16	2000	330.0	16.4	8.35	6.6	2.4	12.0	16.0	Q1
MAX3221EIDYYR	SOT-23-THIN	DYY	16	3000	330.0	12.4	4.8	3.6	1.6	8.0	12.0	Q3
MAX3221EIPWR	TSSOP	PW	16	2000	330.0	12.4	6.9	5.6	1.6	8.0	12.0	Q1
MAX3221EIPWR	TSSOP	PW	16	2000	330.0	12.4	6.9	5.3	1.6	8.0	12.0	Q1
MAX3221EIPWR	TSSOP	PW	16	2000	330.0	12.4	6.9	5.6	1.6	8.0	12.0	Q1
MAX3221EIPWRG4	TSSOP	PW	16	2000	330.0	12.4	6.9	5.3	1.6	8.0	12.0	Q1
MAX3221EIPWRG4	TSSOP	PW	16	2000	330.0	12.4	6.9	5.6	1.6	8.0	12.0	Q1

TAPE AND REEL BOX DIMENSIONS

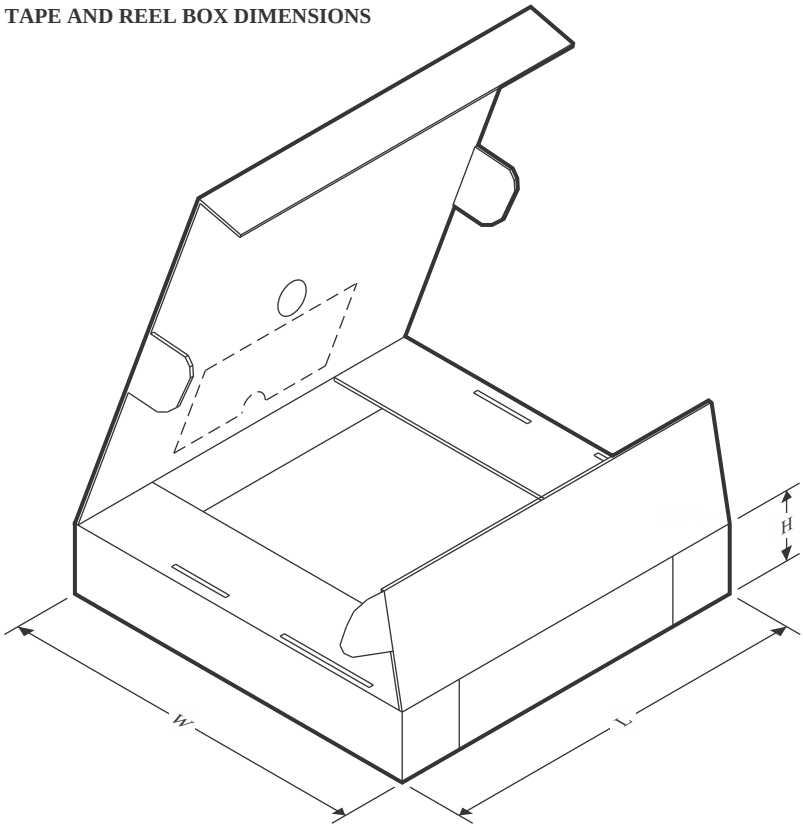

*All dimensions are nominal

Device	Package Type	Package Drawing	Pins	SPQ	Length (mm)	Width (mm)	Height (mm)
MAX3221ECDBR	SSOP	DB	16	2000	353.0	353.0	32.0
MAX3221ECPWR	TSSOP	PW	16	2000	356.0	356.0	35.0
MAX3221ECPWR	TSSOP	PW	16	2000	353.0	353.0	32.0
MAX3221ECPWRG4	TSSOP	PW	16	2000	353.0	353.0	32.0
MAX3221EIDBR	SSOP	DB	16	2000	353.0	353.0	32.0
MAX3221EIDYYR	SOT-23-THIN	DYY	16	3000	336.6	336.6	31.8
MAX3221EIPWR	TSSOP	PW	16	2000	353.0	353.0	32.0
MAX3221EIPWR	TSSOP	PW	16	2000	367.0	367.0	35.0
MAX3221EIPWR	TSSOP	PW	16	2000	356.0	356.0	35.0
MAX3221EIPWRG4	TSSOP	PW	16	2000	367.0	367.0	35.0
MAX3221EIPWRG4	TSSOP	PW	16	2000	353.0	353.0	32.0

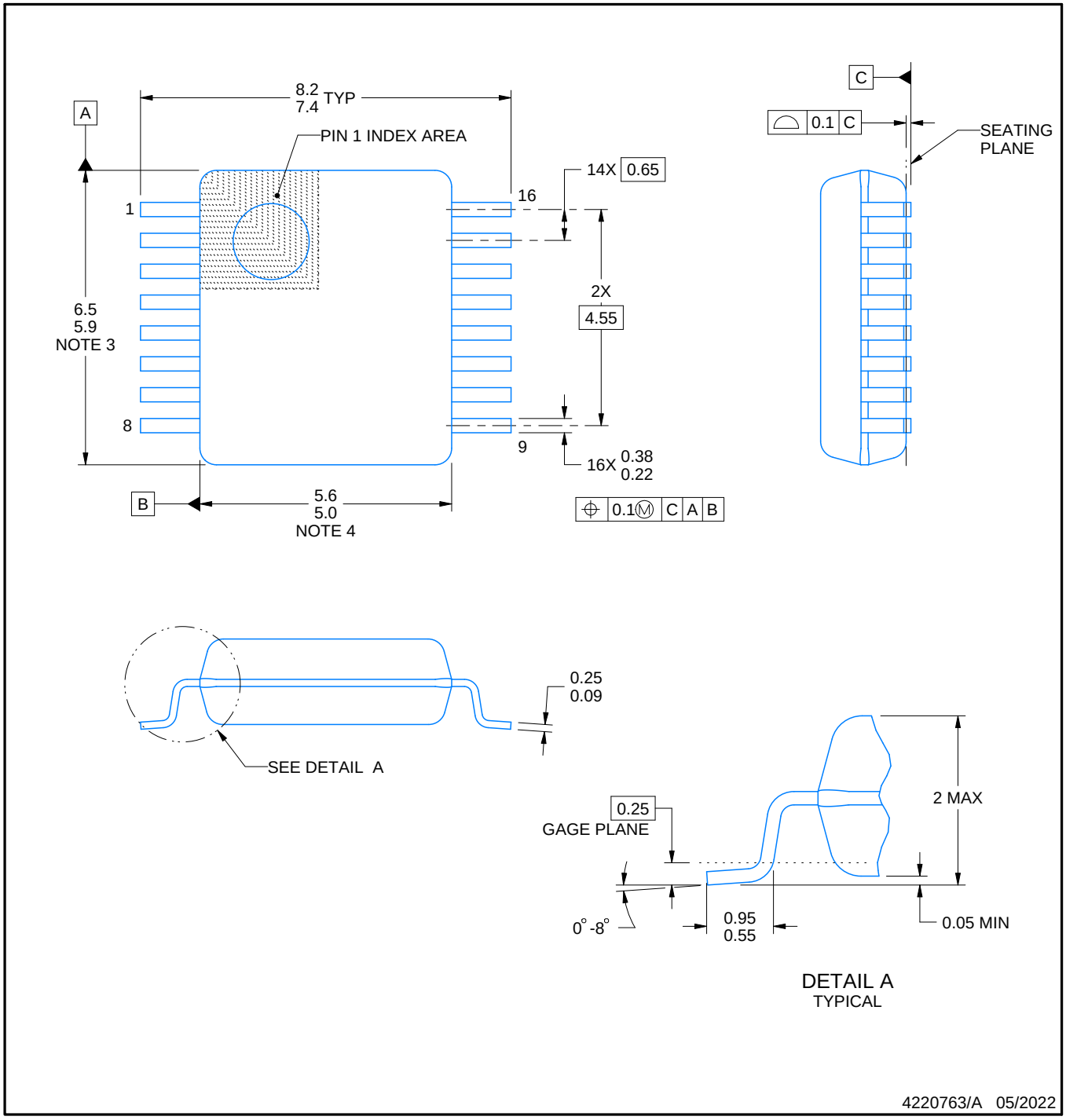

NOTES:

1. All linear dimensions are in millimeters. Any dimensions in parenthesis are for reference only. Dimensioning and tolerancing per ASME Y14.5M.
2. This drawing is subject to change without notice.
3. This dimension does not include mold flash, protrusions, or gate burrs. Mold flash, protrusions, or gate burrs shall not exceed 0.15 mm per side.
4. Reference JEDEC registration MO-150.

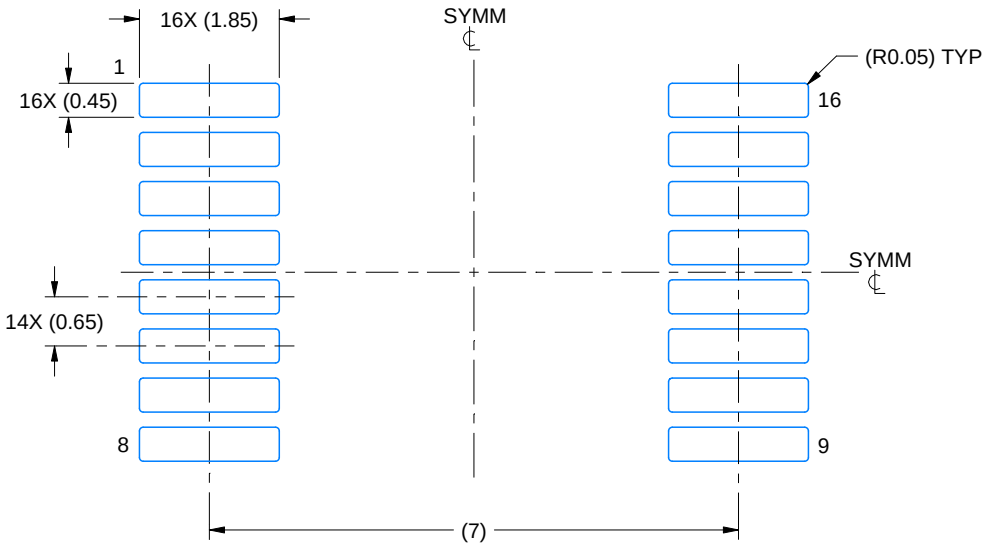

LAND PATTERN EXAMPLE
EXPOSED METAL SHOWN
SCALE: 10X

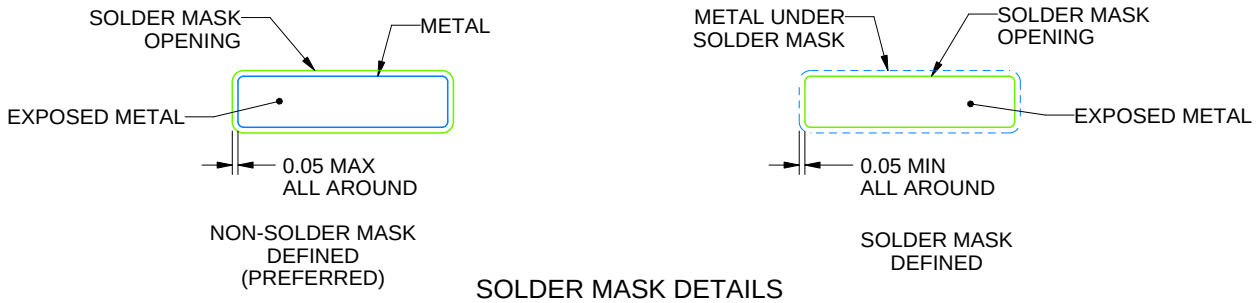

SOLDER MASK DETAILS

4220763/A 05/2022

NOTES: (continued)

5. Publication IPC-7351 may have alternate designs.
6. Solder mask tolerances between and around signal pads can vary based on board fabrication site.

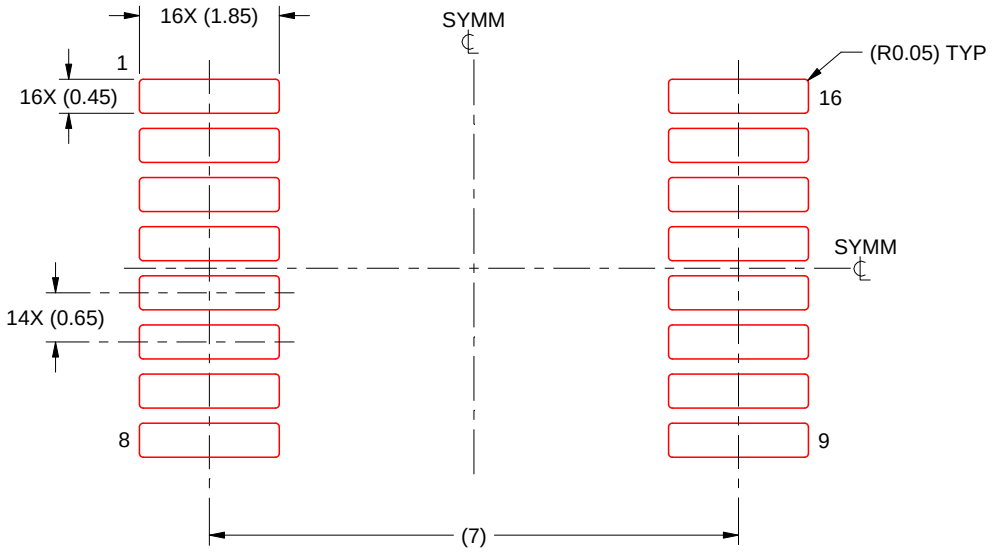

SOLDER PASTE EXAMPLE
BASED ON 0.125 mm THICK STENCIL
SCALE: 10X

4220763/A 05/2022

NOTES: (continued)

7. Laser cutting apertures with trapezoidal walls and rounded corners may offer better paste release. IPC-7525 may have alternate design recommendations.
8. Board assembly site may have different recommendations for stencil design.

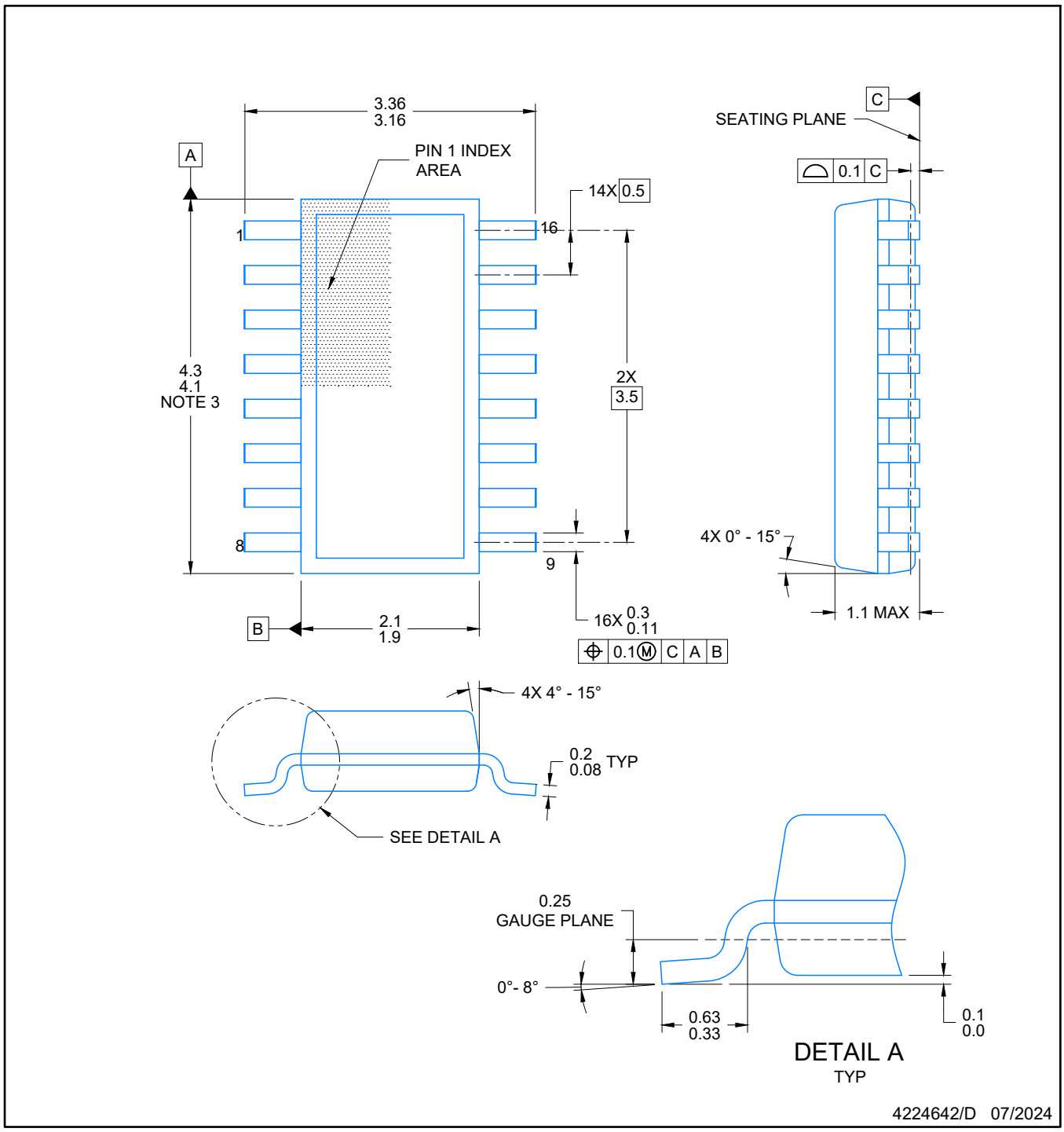

NOTES:

1. All linear dimensions are in millimeters. Any dimensions in parenthesis are for reference only. Dimensioning and tolerancing per ASME Y14.5M.
2. This drawing is subject to change without notice.
3. This dimension does not include mold flash, protrusions, or gate burrs. Mold flash, protrusions, or gate burrs shall not exceed 0.15 per side.
4. This dimension does not include interlead flash. Interlead flash shall not exceed 0.50 per side.
5. Reference JEDEC Registration MO-345, Variation AA

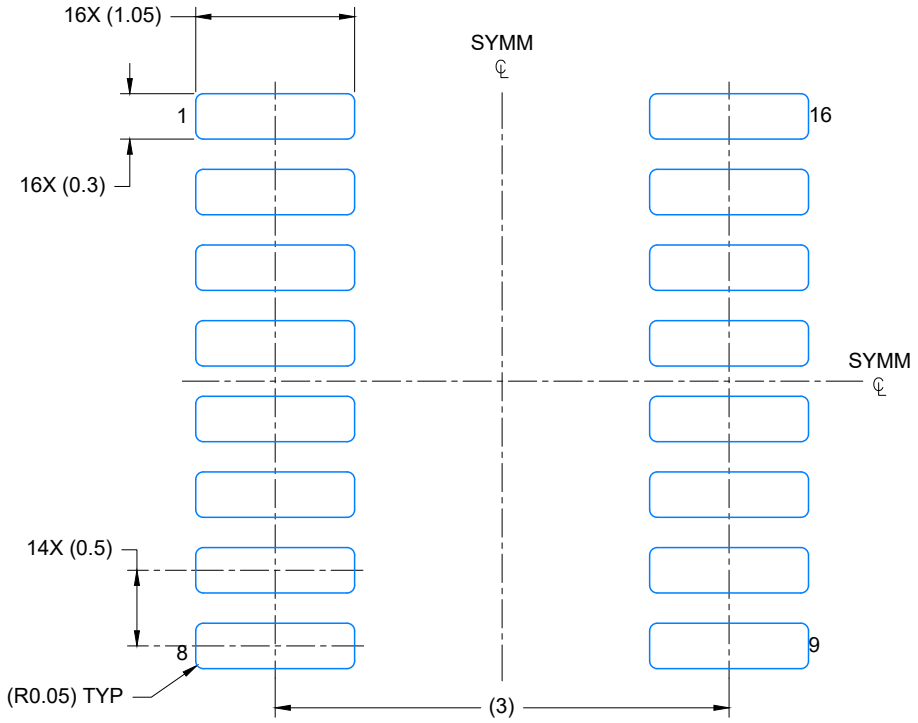

LAND PATTERN EXAMPLE
EXPOSED METAL SHOWN
SCALE: 20X

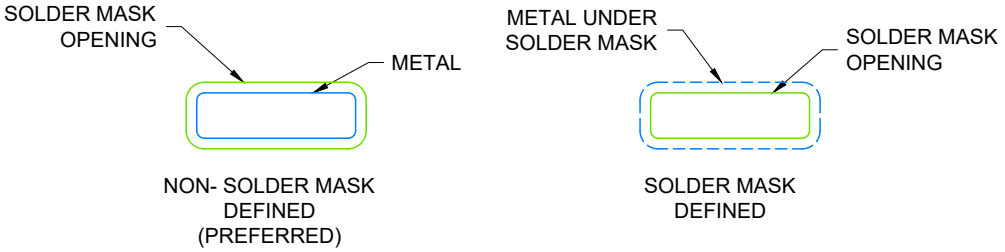

SOLDER MASK DETAILS

4224642/D 07/2024

NOTES: (continued)

6. Publication IPC-7351 may have alternate designs.
7. Solder mask tolerances between and around signal pads can vary based on board fabrication site.

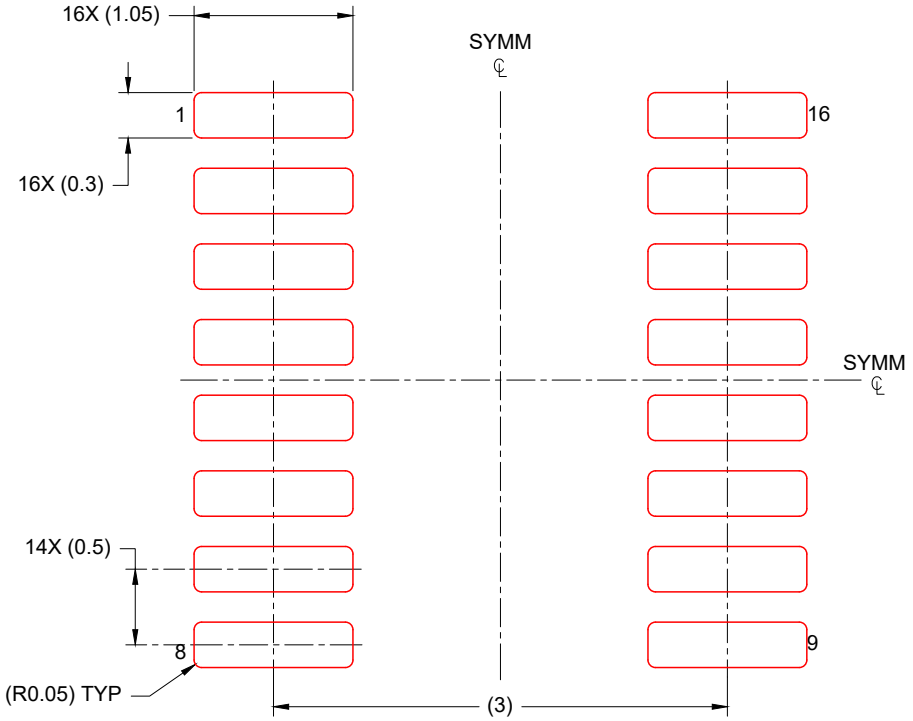

SOLDER PASTE EXAMPLE
BASED ON 0.125 mm THICK STENCIL
SCALE: 20X

4224642/D 07/2024

NOTES: (continued)

8. Laser cutting apertures with trapezoidal walls and rounded corners may offer better paste release. IPC-7525 may have alternate design recommendations.
9. Board assembly site may have different recommendations for stencil design.

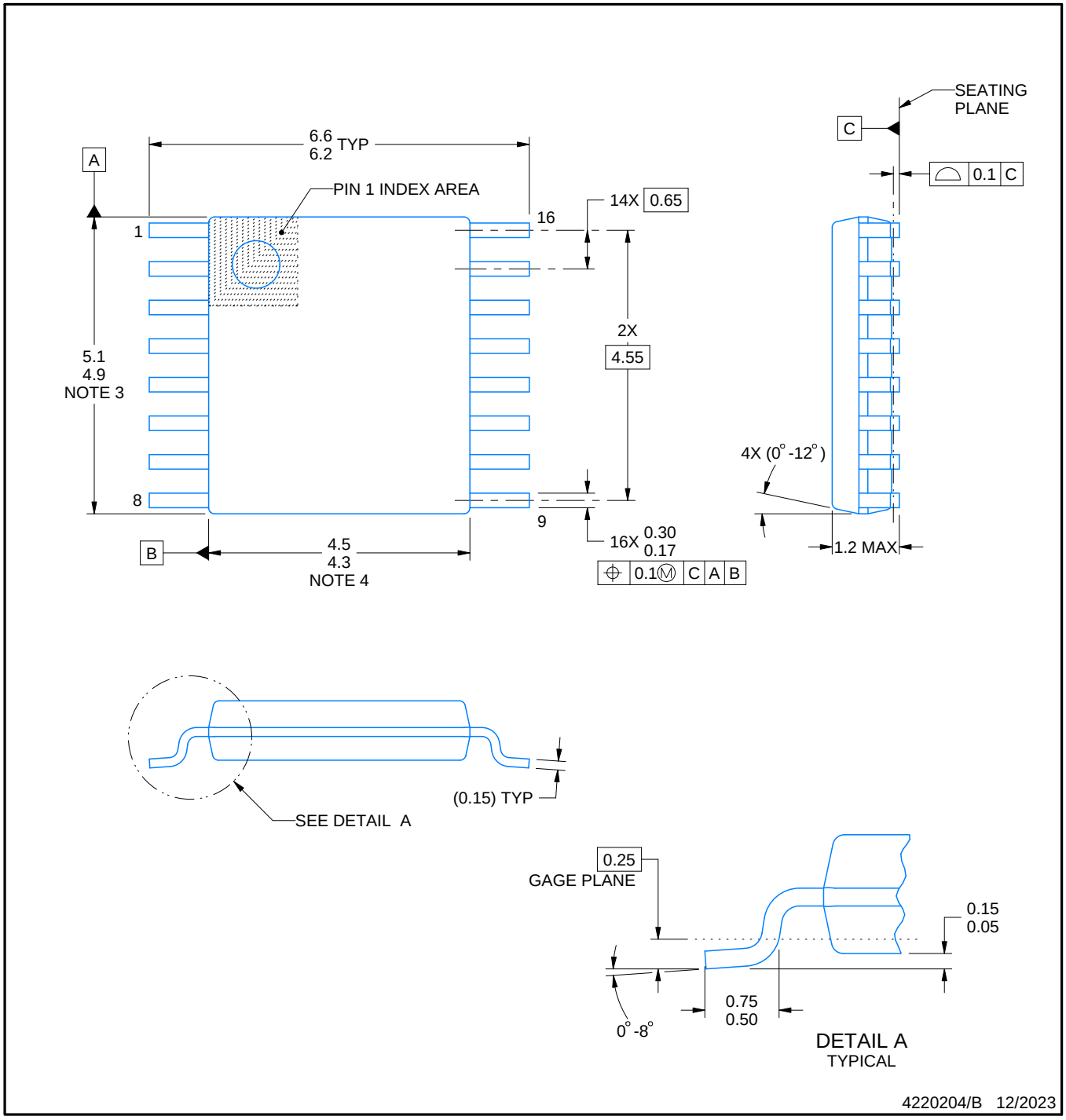

NOTES:

1. All linear dimensions are in millimeters. Any dimensions in parenthesis are for reference only. Dimensioning and tolerancing per ASME Y14.5M.
2. This drawing is subject to change without notice.
3. This dimension does not include mold flash, protrusions, or gate burrs. Mold flash, protrusions, or gate burrs shall not exceed 0.15 mm per side.
4. This dimension does not include interlead flash. Interlead flash shall not exceed 0.25 mm per side.
5. Reference JEDEC registration MO-153.

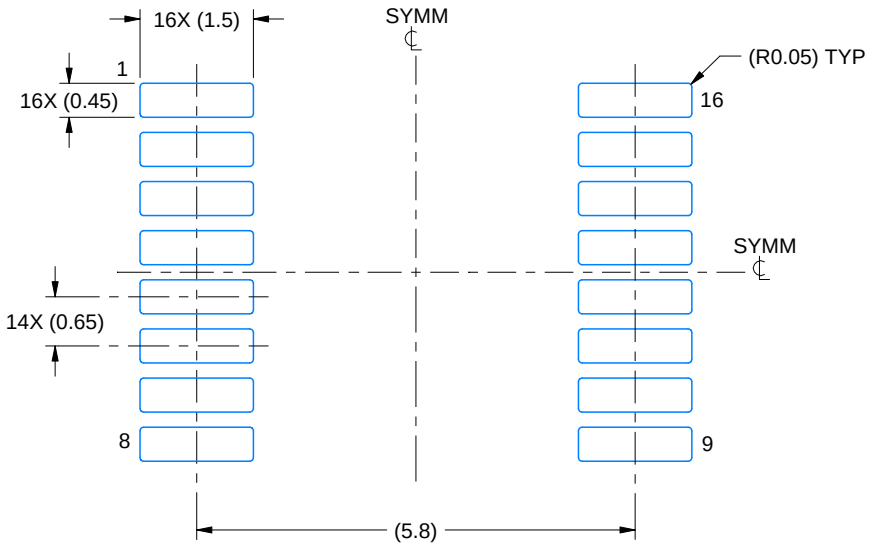

LAND PATTERN EXAMPLE
EXPOSED METAL SHOWN
SCALE: 10X

NON-SOLDER MASK DEFINED (PREFERRED)

SOLDER MASK DEFINED

SOLDER MASK DETAILS

4220204/B 12/2023

NOTES: (continued)

6. Publication IPC-7351 may have alternate designs.
7. Solder mask tolerances between and around signal pads can vary based on board fabrication site.

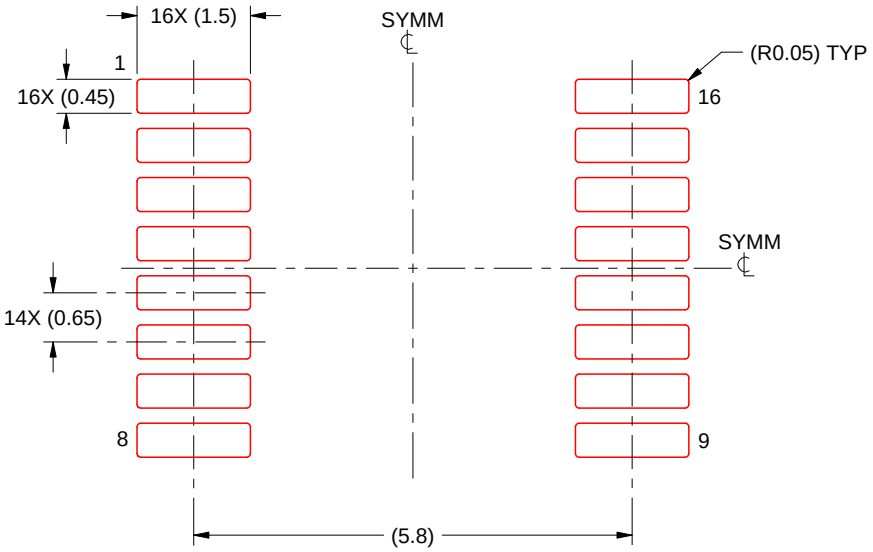

SOLDER PASTE EXAMPLE
BASED ON 0.125 mm THICK STENCIL
SCALE: 10X

4220204/B 12/2023

NOTES: (continued)

8. Laser cutting apertures with trapezoidal walls and rounded corners may offer better paste release. IPC-7525 may have alternate design recommendations.
9. Board assembly site may have different recommendations for stencil design.

IMPORTANT NOTICE AND DISCLAIMER

TI PROVIDES TECHNICAL AND RELIABILITY DATA (INCLUDING DATASHEETS), DESIGN RESOURCES (INCLUDING REFERENCE DESIGNS), APPLICATION OR OTHER DESIGN ADVICE, WEB TOOLS, SAFETY INFORMATION, AND OTHER RESOURCES “AS IS” AND WITH ALL FAULTS, AND DISCLAIMS ALL WARRANTIES, EXPRESS AND IMPLIED, INCLUDING WITHOUT LIMITATION ANY IMPLIED WARRANTIES OF MERCHANTABILITY, FITNESS FOR A PARTICULAR PURPOSE OR NON-INFRINGEMENT OF THIRD PARTY INTELLECTUAL PROPERTY RIGHTS.

These resources are intended for skilled developers designing with TI products. You are solely responsible for (1) selecting the appropriate TI products for your application, (2) designing, validating and testing your application, and (3) ensuring your application meets applicable standards, and any other safety, security, regulatory or other requirements.

These resources are subject to change without notice. TI grants you permission to use these resources only for development of an application that uses the TI products described in the resource. Other reproduction and display of these resources is prohibited. No license is granted to any other TI intellectual property right or to any third party intellectual property right. TI disclaims responsibility for, and you fully indemnify TI and its representatives against any claims, damages, costs, losses, and liabilities arising out of your use of these resources.

TI’s products are provided subject to TI’s Terms of Sale, TI’s General Quality Guidelines, or other applicable terms available either on ti.com or provided in conjunction with such TI products. TI’s provision of these resources does not expand or otherwise alter TI’s applicable warranties or warranty disclaimers for TI products. Unless TI explicitly designates a product as custom or customer-specified, TI products are standard, catalog, general purpose devices.

TI objects to and rejects any additional or different terms you may propose.

Copyright © 2026, Texas Instruments Incorporated

Last updated 10/2025