LP3869x/-Q1 500-mA Low-Dropout CMOS Linear Regulators Stable With Ceramic Output Capacitors

1 Features

- Wide Input Voltage Range (2.7 V to 10 V)
- All WSON Options are Available as AEC-Q100 Grade 1
- 2% Output Accuracy (25°C)
- Low Dropout Voltage: 250 mV at 500 mA (Typical, 5 V Out)
- Precision (Trimmed) Bandgap Reference
- Ensured Specifications for –40°C to 125°C
- 1-µA Off-State Quiescent Current
- Thermal Overload Protection
- Foldback Current Limiting
- Ground Pin Current: 55 µA (typical) at full load
- Enable Pin (LP38693)

2 Applications

- Hard Disk Drives
- Notebook Computers
- Battery-Powered Devices
- Portable Instrumentation

3 Description

The LP3869x low-dropout CMOS linear regulators provide tight output tolerance (2% typical), extremely low dropout voltage (250 mV at 500-mA load current, V_{OUT} = 5 V), and excellent AC performance using ultralow equivalent series resistance (ESR) ceramic output capacitors.

The low thermal resistance of the WSON, SOT-223, and TO-252 packages allow use of the full operating current even in high ambient temperature environments.

The use of a PMOS power transistor means that no DC base-drive current is required to bias it, thus allowing ground pin current to remain below 100 µA regardless of load current, input voltage, or operating temperature.

Device Information(1)

PART NUMBER	PACKAGE	BODY SIZE (NOM)
LP38691	TO-252 (3)	6.58 mm × 6.10 mm
	WSON (6)	3.00 mm × 3.00 mm
LP38693	SOT-223 (5)	6.50 mm × 3.56 mm
	WSON (6)	3.00 mm × 3.00 mm
LP38691-Q1	WSON (6)	3.00 mm × 3.00 mm
LP38693-Q1		

(1) For all available packages, see the orderable addendum at the end of the data sheet.

4 Typical Application Circuits

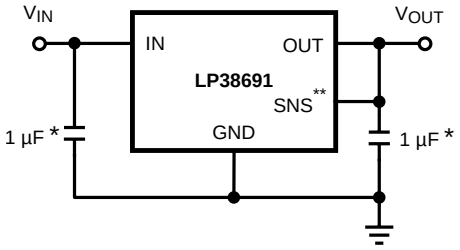

* Minimum value required for stability

** WSON package devices only

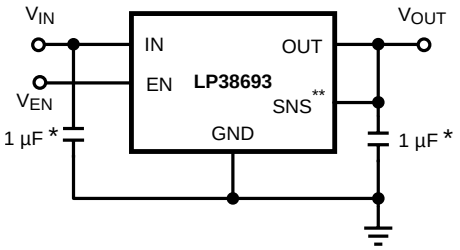

* Minimum value required for stability

** WSON package devices only

An IMPORTANT NOTICE at the end of this data sheet addresses availability, warranty, changes, use in safety-critical applications, intellectual property matters and other important disclaimers. PRODUCTION DATA.

Table of Contents

1 Features ... 1
2 Applications ... 1
3 Description ... 1
4 Typical Application Circuits ... 1
5 Revision History ... 2
6 Pin Configuration and Functions ... 3
7 Specifications ... 4
7.1 Absolute Maximum Ratings ... 4
7.2 ESD Ratings: LP38691 and LP38693 ... 4
7.3 ESD Ratings: LP38691-Q1 and LP38693-Q1 ... 4
7.4 Recommended Operating Conditions ... 4
7.5 Thermal Information ... 5
7.6 Electrical Characteristics ... 5
7.7 Typical Characteristics ... 7
8 Detailed Description ... 11
8.1 Overview ... 11
8.2 Functional Block Diagrams ... 11
8.3 Feature Description ... 13
8.4 Device Functional Modes ... 13
9 Application and Implementation ... 14
9.1 Application Information ... 14
9.2 Typical Application ... 14
10 Power Supply Recommendations ... 19
11 Layout ... 19
11.1 Layout Guidelines ... 19
11.2 Layout Example ... 19
11.3 WSON Mounting ... 20
12 Device and Documentation Support ... 21
12.1 Documentation Support ... 21
12.2 Related Links ... 21
12.3 Community Resources ... 21
12.4 Trademarks ... 21
12.5 Electrostatic Discharge Caution ... 21
12.6 Glossary ... 21
13 Mechanical, Packaging, and Orderable Information ... 21

5 Revision History

NOTE: Page numbers for previous revisions may differ from page numbers in the current version.

Changes from Revision N (March 2015) to Revision O	Page
• Added top navigator icon for TI Designs	1
• Added Caution note to *Foldback Current Limiting* subsection	13

Changes from Revision M (February 2015) to Revision N	Page
• Added "Cout = xx pF" to "Cout = µF" for Figures 4 through 6 in *Typical Characteristics*	1

Changes from Revision L (December 2014) to Revision M	Page
• Changed wording of *Description* and added one item to *Features*; update Vin, Vout and Ven pin names to IN, OUT, and EN in text and graphics	1
• Added top navigator icon for TI Designs	1
• Changed "PFM" to 'TO-252"	4
• Changed *Handling Ratings* to *ESD Ratings* format	4

Changes from Revision K (April 2013) to Revision L	Page
• Added *Handling Rating* table, *Feature Description* section, *Device Functional Modes*, *Application and Implementation* section, *Power Supply Recommendations* section, *Layout* section, *Device and Documentation Support* section, and *Mechanical, Packaging, and Orderable Information* section; update thermal values	1

Changes from Revision J (April 2013) to Revision K	Page
• Changed layout of National Data Sheet to TI format	18

Copyright © 2005–2015, Texas Instruments Incorporated

6 Pin Configuration and Functions

NDP Package
3-Pin TO-252
Top View

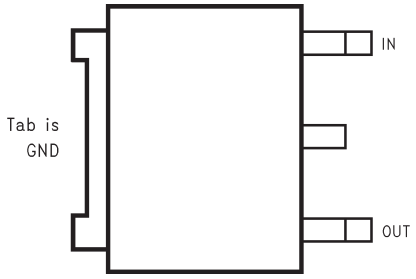

NDC Package
5-Pin SOT-223
Top View

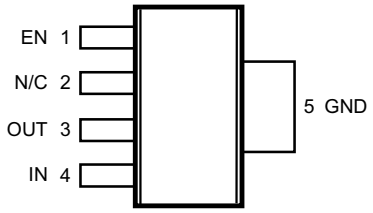

NC - No internal connection

NGG Package
6-Pin WSON With Exposed Thermal Pad
LP38691SD Top View

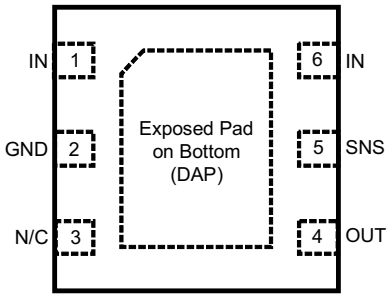

NC - No internal connection

NGG Package
6-Pin WSON With Exposed Thermal Pad
LP38693SD Top View

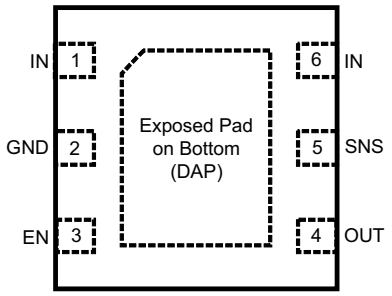

Pin Functions

PIN					I/O	DESCRIPTION
NAME	TO-252	WSON		SOT-223		
DAP	—	√	√	—	—	WSON Only - The DAP (Exposed Pad) functions as a thermal connection when soldered to a copper plane. See *WSON Mounting* section for more information.
EN	—	—	3	1	I	The EN pin allows the part to be turned ON and OFF by pulling this pin high or low.
GND	TAB	2	2	5	—	Circuit ground for the regulator. For the TO-252 and SOT-223 packages this is thermally connected to the die and functions as a heat sink when the soldered down to a large copper plane.
IN	3	1, 6	1, 6	4	I	This is the input supply voltage to the regulator. For WSON devices, both IN pins must be tied together for full current operation (250 mA maximum per pin).
OUT	1	4	4	3	O	Regulated output voltage
SNS	—	5	5	—	I	WSON Only - Output SNS pin allows remote sensing at the load which eliminate the error in output voltage due to voltage drops caused by the resistance in the traces between the regulator and the load. This pin must be tied to OUT.

7 Specifications

7.1 Absolute Maximum Ratings(1)(2)

	MIN	MAX	UNIT
Lead temp. (Soldering, 5 seconds)		260	°C
Power dissipation(3)	Internally Limited		V
V(max) All pins (with respect to GND)	–0.3	12	V
I_{OUT}(4)	Internally Limited		V
Junction temperature	–40	150	°C
Storage temperature, T_{stg}	−65	150	

(1) Absolute maximum ratings indicate limits beyond which damage to the component may occur. Operating ratings indicate conditions for which the device is intended to be functional, but do not ensure specific performance limits. For ensured specifications, see *Electrical Characteristics*. Specifications do not apply when operating the device outside of its rated operating conditions.
(2) If Military/Aerospace specified devices are required, contact the Texas Instruments Sales Office/ Distributors for availability and specifications.
(3) At elevated temperatures, device power dissipation must be derated based on package thermal resistance and heatsink values (if a heatsink is used). When using the WSON package, refer to *AN-1187 Leadless Leadframe Package (LLP)*, SNOA401, and the *WSON Mounting* section in this datasheet. If power dissipation causes the junction temperature to exceed specified limits, the device goes into thermal shutdown.
(4) If used in a dual-supply system where the regulator load is returned to a negative supply, the output pin must be diode clamped to ground.

7.2 ESD Ratings: LP38691 and LP38693

		VALUE	UNIT
$V_{(ESD)}$ Electrostatic discharge	Human-body model (HBM), per ANSI/ESDA/JEDEC JS-001(1)	±2000	V

(1) JEDEC document JEP155 states that 500-V HBM allows safe manufacturing with a standard ESD control process.

7.3 ESD Ratings: LP38691-Q1 and LP38693-Q1

		VALUE	UNIT
$V_{(ESD)}$ Electrostatic discharge	Human-body model (HBM), per AEC Q100-002(1)	±2000	V

(1) AEC Q100-002 indicates that HBM stressing shall be in accordance with the ANSI/ESDA/JEDEC JS-001 specification.

7.4 Recommended Operating Conditions

	MIN	NOM	MAX	UNIT
V_{IN} supply voltage	2.7		10	V
Operating junction temperature	−40		125	°C

Copyright © 2005–2015, Texas Instruments Incorporated

7.5 Thermal Information

THERMAL METRIC[1]		LP38691 TO-252 3 PINS	LP38693 WSON 6 PINS	LP3869x SOT-223 5 PINS	UNIT
$R_{\theta JA}$[2]	Junction-to-ambient thermal resistance	50.5	50.6	68.5	°C/W
$R_{\theta JC(top)}$	Junction-to-case (top) thermal resistance	52.6	44.4	52.2	°C/W
$R_{\theta JB}$	Junction-to-board thermal resistance	29.7	24.9	13.0	°C/W
ψ_{JT}	Junction-to-top characterization parameter	4.8	0.4	5.5	°C/W
ψ_{JB}	Junction-to-board characterization parameter	29.3	25.1	12.8	°C/W
$R_{\theta JC(bot)}$	Junction-to-case (bottom) thermal resistance	1.5	5.4	n/a	°C/W

(1) For more information about traditional and new thermal metrics, see the *Semiconductor and IC Package Thermal Metrics* application report, SPRA953.
(2) Junction-to-ambient thermal resistance, High-K.

7.6 Electrical Characteristics

Unless otherwise specified, limits apply for T_J = 25°C, $V_{IN} = V_{OUT}$ + 1 V, $C_{IN} = C_{OUT}$ = 10 µF, I_{LOAD} = 10 mA. Minimum and maximum limits are specified through testing, statistical correlation, or design.

PARAMETER		TEST CONDITIONS		MIN	TYP[1]	MAX	UNIT
V_O	Output voltage tolerance			–2		2	$\%V_{OUT}$
		100 µA < I_L < 0.5 A V_O + 1 V ≤ V_{IN} ≤ 10 V Full operating temperature range		–4		4	$\%V_{OUT}$
$\Delta V_O/\Delta V_{IN}$	Output voltage line regulation[2]	V_O + 0.5 V ≤ V_{IN} ≤ 10 V I_L = 25 mA			0.03		%/V
		V_O + 0.5 V ≤ V_{IN} ≤ 10 V I_L = 25 mA Full operating temperature range				0.1	%/V
$\Delta V_O/\Delta I_L$	Output voltage load regulation[3]	1 mA < I_L < 0.5 A $V_{IN} = V_O$ + 1 V			1.8		%/A
		1 mA < I_L < 0.5 A $V_{IN} = V_O$ + 1 V Full operating temperature range				5	%/A
$V_{IN} – V_{OUT}$	Dropout voltage[4]	(V_O = 2.5 V)	I_L = 0.1 A		80		mV
			I_L = 0.5 A		430		mV
		(V_O = 2.5 V) Full operating temperature range	I_L = 0.1 A			145	mV
			I_L = 0.5 A			725	mV
		(V_O = 3.3 V)	I_L = 0.1 A		65		mV
			I_L = 0.5 A		330		mV
		(V_O = 3.3 V) Full operating temperature range	I_L = 0.1 A			110	mV
			I_L = 0.5 A			550	mV
		(V_O = 5 V)	I_L = 0.1 A		45		mV
			I_L = 0.5 A		250		mV
		(V_O = 5 V) Full operating temperature range	I_L = 0.1 A			100	mV
			I_L = 0.5 A			450	mV

(1) Typical numbers represent the most likely parametric norm for 25°C operation.
(2) Output voltage line regulation is defined as the change in output voltage from nominal value resulting from a change in input voltage.
(3) Output voltage load regulation is defined as the change in output voltage from nominal value as the load current increases from 1 mA to full load.
(4) Dropout voltage is defined as the minimum input to output differential required to maintain the output within 100 mV of nominal value.

Copyright © 2005–2015, Texas Instruments Incorporated

Electrical Characteristics (continued)

Unless otherwise specified, limits apply for T_J = 25°C, V_{IN} = V_{OUT} + 1 V, C_{IN} = C_{OUT} = 10 µF, I_{LOAD} = 10 mA. Minimum and maximum limits are specified through testing, statistical correlation, or design.

PARAMETER		TEST CONDITIONS	MIN	TYP(1)	MAX	UNIT
I_Q	Quiescent current	V_{IN} ≤ 10 V, I_L =100 µA - 0.5 A		55		µA
		V_{IN} ≤ 10 V, I_L =100 µA - 0.5 A Full operating temperature range			100	
		V_{EN} ≤ 0.4 V, (LP38693 Only)		0.001	1	
I_L(MIN)	Minimum load current	V_{IN} – V_O ≤ 4 V Full operating temperature range			100	
I_{FB}	Foldback current limit	V_{IN} – V_O > 5 V		350		mA
		V_{IN} – V_O < 4 V		850		
PSRR	Ripple rejection	V_{IN} = V_O + 2 V(DC), with 1 V(p-p) / 120-Hz Ripple		55		dB
T_{SD}	Thermal shutdown activation (junction temp)			160		°C
T_{SD} (HYST)	Thermal shutdown hysteresis (junction temp)			10		
e_n	Output noise	BW = 10 Hz to 10 kHz V_O = 3.3 V		0.7		µV/√Hz
V_O (LEAK)	Output leakage current	V_O = V_O(NOM) + 1 V at 10 V_{IN}		0.5	12	µA
V_{EN}	Enable voltage (LP38693 Only)	Output = OFF Full operating temperature range			0.4	V
		Output = ON, V_{IN} = 4 V Full operating temperature range	1.8			
		Output = ON, V_{IN} = 6 V Full operating temperature range	3			
		Output = ON, V_{IN} = 10 V Full operating temperature range	4			
I_{EN}	Enable pin leakage (ILP38693 only)	V_{EN} = 0 V or 10 V, V_{IN} = 10 V	–1	0.001	1	µA

Copyright © 2005–2015, Texas Instruments Incorporated

7.7 Typical Characteristics

Unless otherwise specified: T_J = 25°C, C_{IN} = C_{OUT} = 10 µF, EN pin is tied to IN (LP38693 only), V_{OUT} = 1.8 V, V_{IN} = V_{OUT} 1 V, I_L = 10 mA.

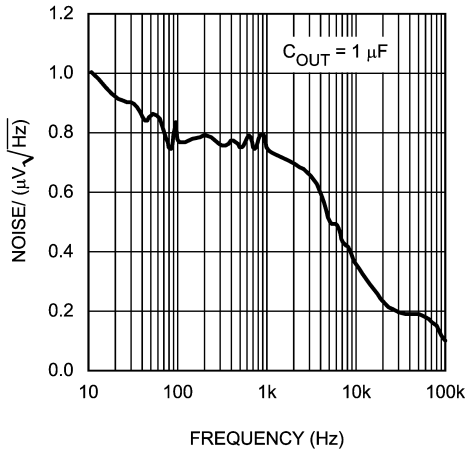

Figure 1. Noise vs Frequency

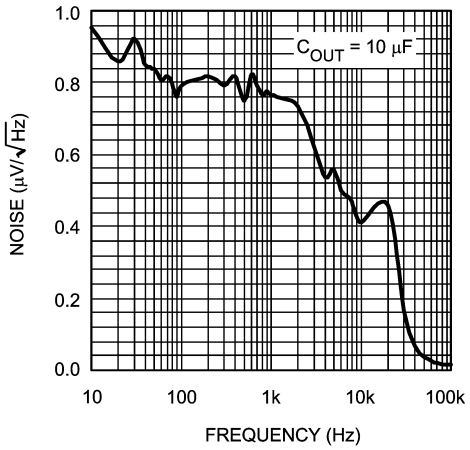

Figure 2. Noise vs Frequency

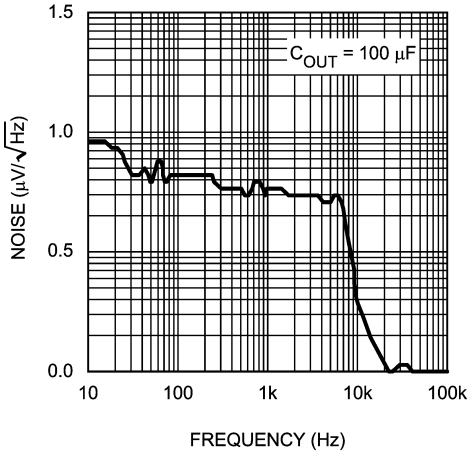

Figure 3. Noise vs Frequency

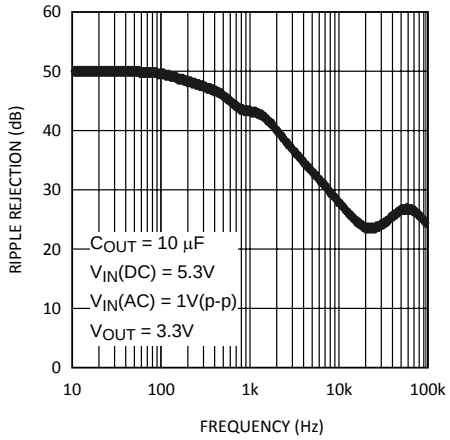

Figure 4. Ripple Rejection

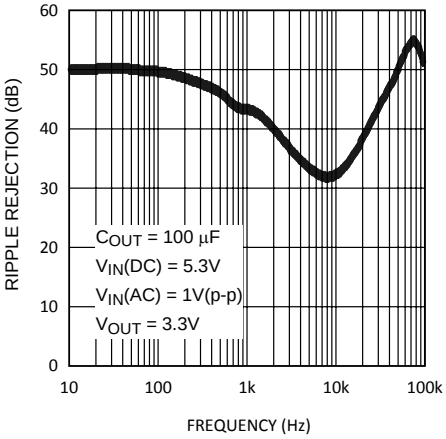

Figure 5. Ripple Rejection

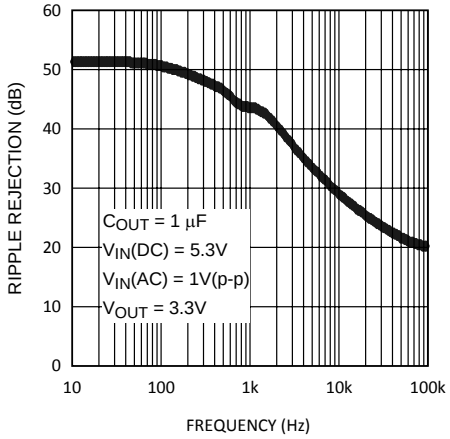

Figure 6. Ripple Rejection

Typical Characteristics (continued)

Unless otherwise specified: T_J = 25°C, C_{IN} = C_{OUT} = 10 µF, EN pin is tied to IN (LP38693 only), V_{OUT} = 1.8 V, V_{IN} = V_{OUT} 1 V, I_L = 10 mA.

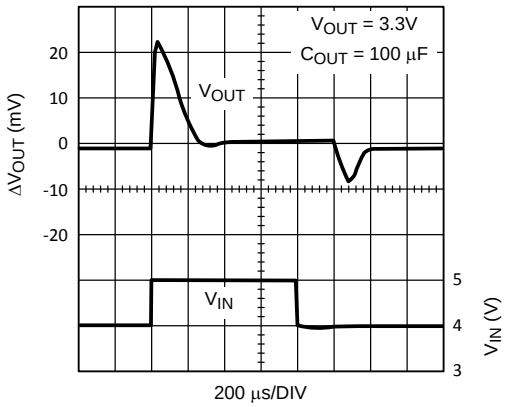

Figure 7. Line Transient Response

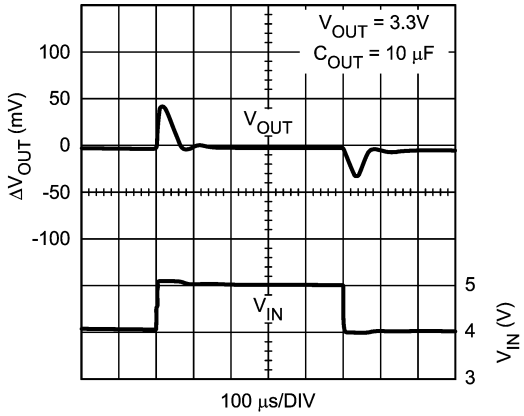

Figure 8. Line Transient Response

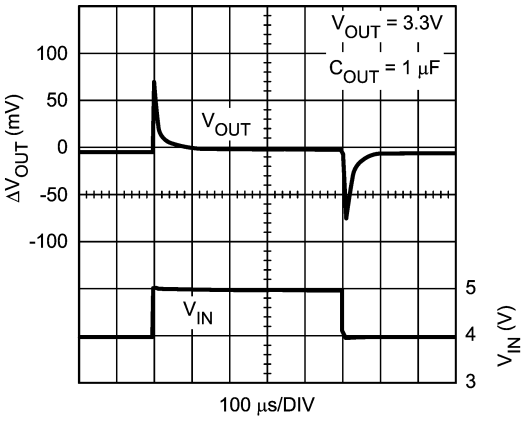

Figure 9. Line Transient Response

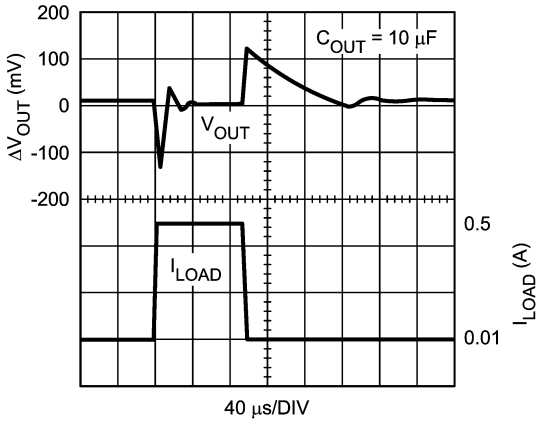

Figure 10. Load Transient Response

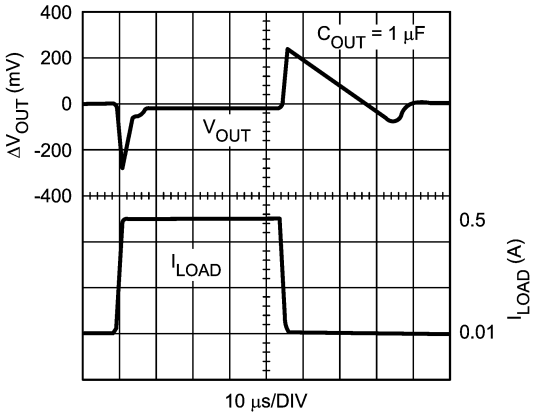

Figure 11. Load Transient Response

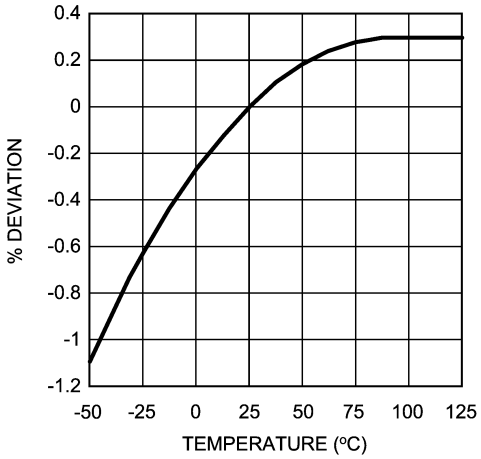

Figure 12. V_{OUT} vs Temperature (5.0 V)

Copyright © 2005–2015, Texas Instruments Incorporated

Typical Characteristics (continued)

Unless otherwise specified: T_J = 25°C, C_{IN} = C_{OUT} = 10 µF, EN pin is tied to IN (LP38693 only), V_{OUT} = 1.8 V, V_{IN} = V_{OUT} 1 V, I_L = 10 mA.

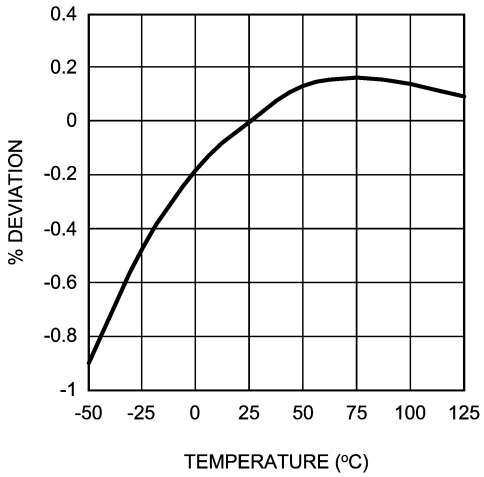

Figure 13. V_{OUT} vs Temperature (3.3 V)

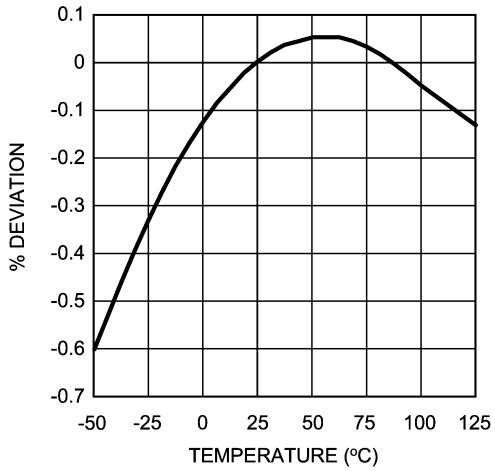

Figure 14. V_{OUT} vs Temperature (2.5 V)

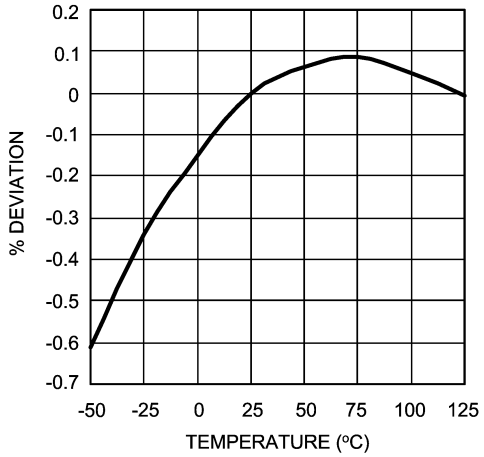

Figure 15. V_{OUT} vs Temperature (1.8 V)

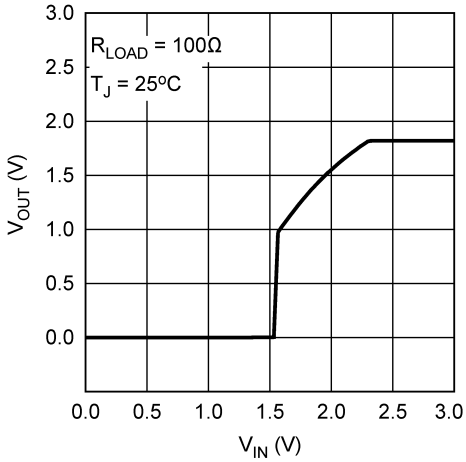

Figure 16. V_{OUT} vs V_{IN} (1.8 V)

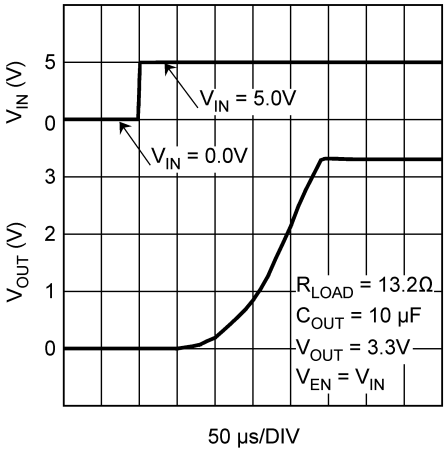

Figure 17. V_{OUT} vs V_{IN}, Power-Up

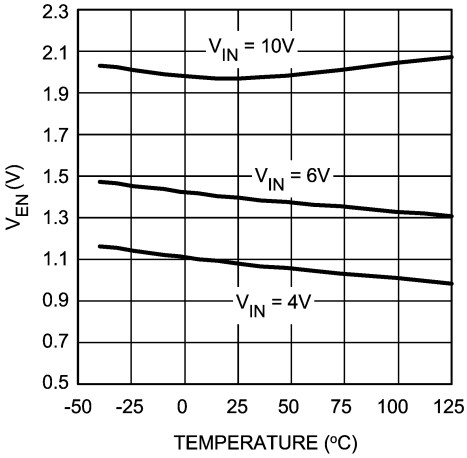

Figure 18. Enable Voltage vs Temperature

Typical Characteristics (continued)

Unless otherwise specified: T_J = 25°C, C_{IN} = C_{OUT} = 10 µF, EN pin is tied to IN (LP38693 only), V_{OUT} = 1.8 V, V_{IN} = V_{OUT} 1 V, I_L = 10 mA.

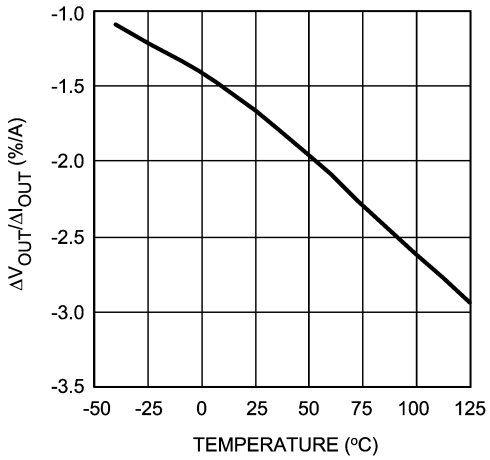

Figure 19. Load Regulation vs Temperature

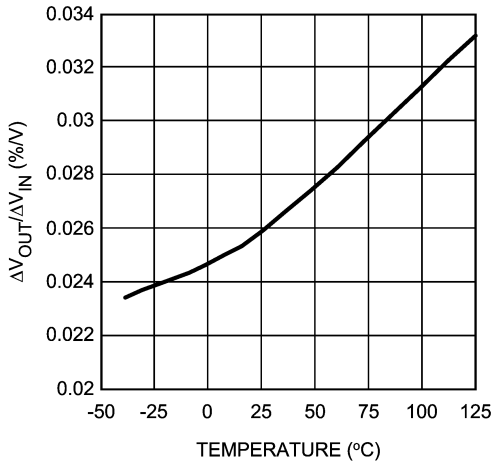

Figure 20. Line Regulation vs Temperature

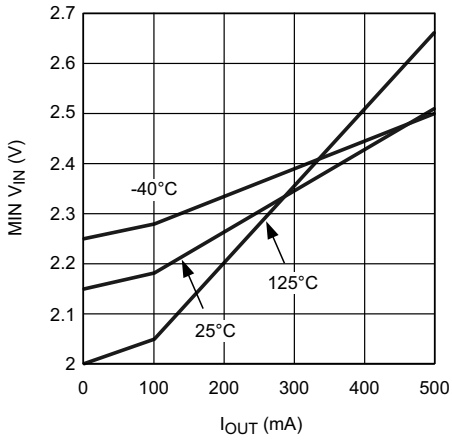

Figure 21. MIN V_{IN} vs I_{OUT}

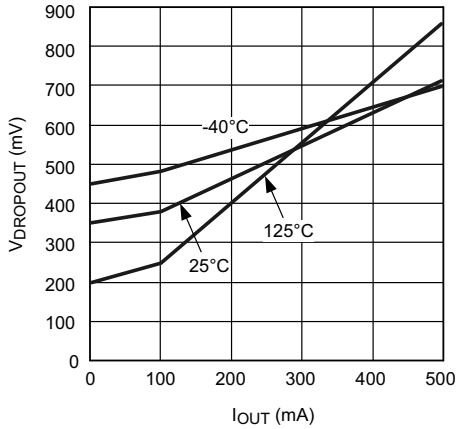

Figure 22. Dropout Voltage vs I_{OUT}

Copyright © 2005–2015, Texas Instruments Incorporated

8 Detailed Description

8.1 Overview

The LP38691 and LP38693 are designed to meet the requirements of portable, battery-powered digital systems providing an accurate output voltage with fast start-up. When disabled via a low logic signal at the enable pin (EN), the power consumption is reduced to virtually zero (LP38693 only).

The LP38691 and LP38693 perform well with a single 1-µF input capacitor and a single 1-µF ceramic output capacitor.

8.2 Functional Block Diagrams

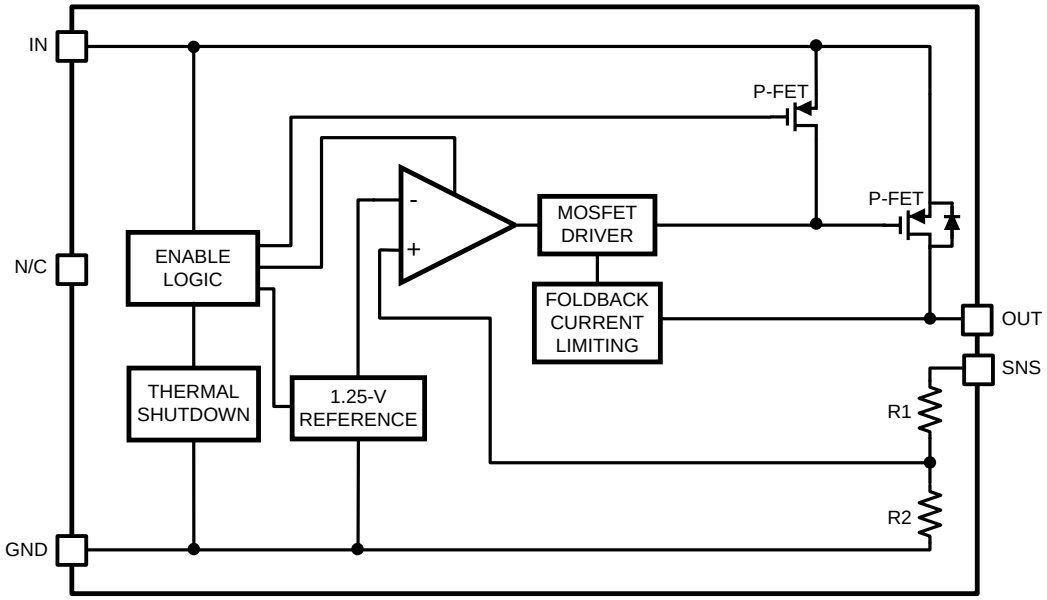

Figure 23. LP38691 Functional Diagram (WSON)

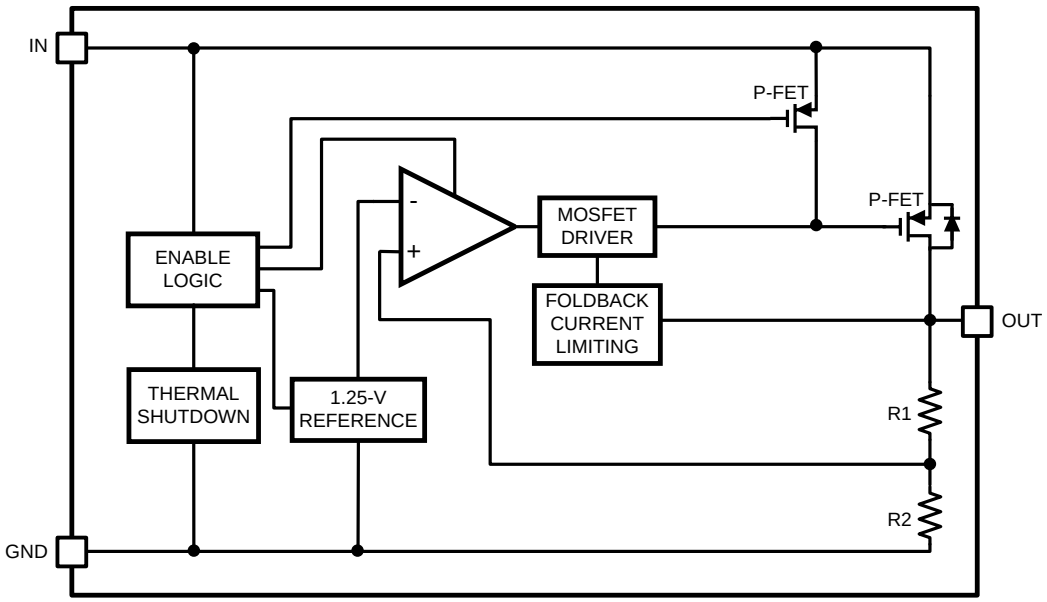

Figure 24. LP38691 Functional Diagram (TO-252)

Functional Block Diagrams (continued)

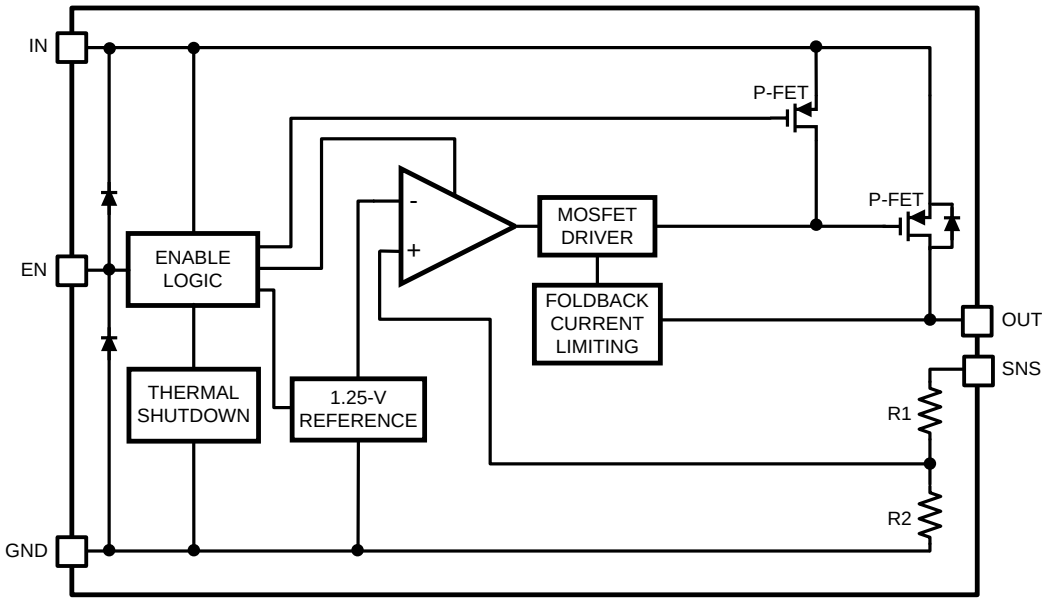

Figure 25. LP38693 Functional Diagram (WSON)

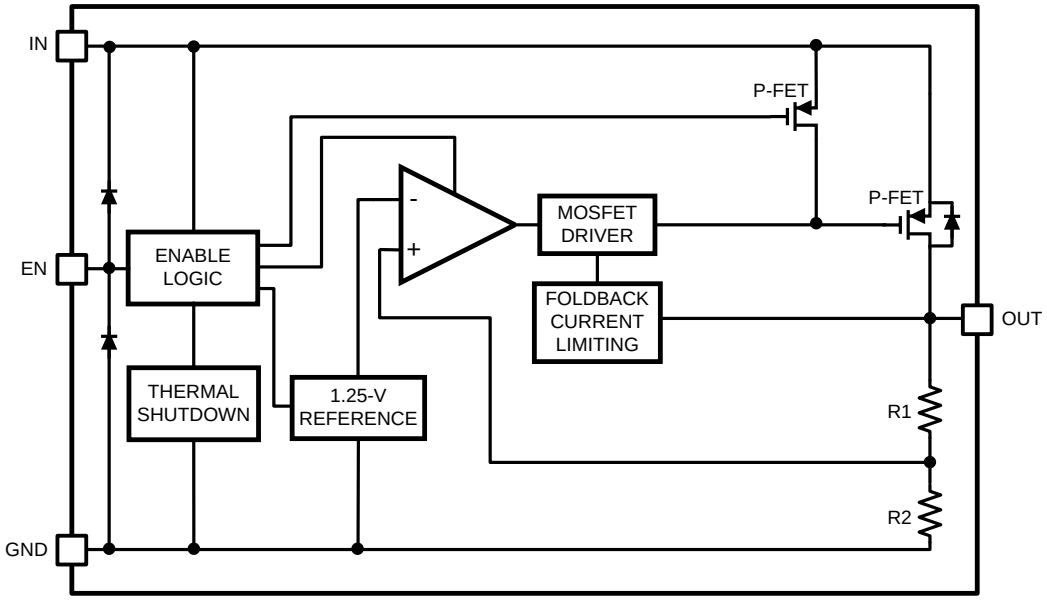

Figure 26. LP38693 Functional Diagram (SOT-223)

Copyright © 2005–2015, Texas Instruments Incorporated

8.3 Feature Description

8.3.1 Enable (EN)

The LP38693 has an Enable pin (EN) which allows an external control signal to turn the regulator output On and Off. The Enable On/Off threshold has no hysteresis. The voltage signal must rise and fall cleanly, and promptly, through the ON and OFF voltage thresholds. The EN pin voltage must be higher than the $V_{EN(MIN)}$ threshold to ensure that the device is fully enabled under all operating conditions. The EN pin voltage must be lower than the $V_{EN(MAX)}$ threshold to ensure that the device is fully disabled. The EN pin has no internal pullup or pulldown to establish a default condition and, as a result, this pin must be terminated either actively or passively. If the EN pin is driven from a source that actively pulls high and low, the drive voltage must not be allowed to go below ground potential or higher than V_{IN}. If the application does not require the Enable function, the pin must be connected directly to the IN pin.

8.3.2 Thermal Overload Protection (T_{SD})

Thermal Shutdown disables the output when the junction temperature rises to approximately 160°C which allows the device to cool. When the junction temperature cools to approximately 150°C, the output circuitry enables.

Based on power dissipation, thermal resistance, and ambient temperature, the thermal protection circuit may cycle on and off. This thermal cycling limits the dissipation of the regulator and protects it from damage as a result of overheating. The Thermal Shutdown circuitry of the LP38693 has been designed to protect against temporary thermal overload conditions.

The Thermal Shutdown circuitry was not intended to replace proper heat-sinking. Continuously running the LP38693 device into thermal shutdown degrades device reliability.

8.3.3 Foldback Current Limiting

Foldback current limiting is built into the LP38691 and LP38693 devices which reduces the amount of output current the part can deliver as the output voltage is reduced. The amount of load current is dependent on the differential voltage between the IN and OUT pins. Typically, when this differential voltage exceeds 5 V, the load current limits at about 350 mA. When the $V_{IN} – V_{OUT}$ differential is reduced below 4 V, load current is limited to about 850 mA.

CAUTION

When toggling the LP38693 Enable (EN) after the input voltage (V_{IN}) is applied, the foldback current limit circuitry is functional the first time that the EN pin is taken high. The foldback current limit circuitry is non-functional the second, and subsequent, times that the EN pin is taken high. Depending on the input and output capacitance values the input inrush current may be higher than expected which can cause the input voltage to droop.

If the EN pin is connected to the IN pin, the foldback current limit circuitry is functional when V_{IN} is applied if V_{IN} starts from less than 0.4 V.

8.4 Device Functional Modes

8.4.1 Enable (EN)

The EN pin voltage must be higher than the $V_{EN(MIN)}$ threshold to ensure that the device is fully enabled under all operating conditions.

8.4.2 Minimum Operating Input Voltage (V_{IN})

The LP38691 and LP38693 do not include any dedicated UVLO circuitry. Neither device internal circuitry is fully functional until V_{IN} is at least 2.7 V. The output voltage is not regulated until $V_{IN} \geq (V_{OUT} + V_{DO})$, or 2.7 V, whichever is higher.

9 Application and Implementation

NOTE

Information in the following applications sections is not part of the TI component specification, and TI does not warrant its accuracy or completeness. TI's customers are responsible for determining suitability of components for their purposes. Customers should validate and test their design implementation to confirm system functionality.

9.1 Application Information

9.1.1 Reverse Voltage

A reverse voltage condition exists when the voltage at the output pin is higher than the voltage at the input pin. Typically this happens when V_{IN} is abruptly taken low and C_{OUT} continues to hold a sufficient charge such that the input to output voltage becomes reversed. A less common condition is when an alternate voltage source is connected to the output.

There are two possible paths for current to flow from the OUT pin back to IN during a reverse voltage condition.

1. While V_{IN} is high enough to keep the control circuity alive, and the EN pin (LP38693 only) is above the $V_{EN(ON)}$ threshold, the control circuitry attempts to regulate the output voltage. If the input voltage is less than the programmed output voltage, the control circuit drives the gate of the pass element to the full ON condition. In this condition, reverse current flows from the OUT to the IN pin, limited only by the $R_{DS(ON)}$ of the pass element and the output to input voltage differential. Discharging an output capacitor up to 1000 µF in this manner does not damage the device as the current rapidly decays. However, continuous reverse current must be avoided. When the EN pin is low, this condition is prevented.
2. The internal PFET pass element has an inherent parasitic diode. During normal operation, the input voltage is higher than the output voltage and the parasitic diode is reverse biased. However, when V_{IN} is below the value where the control circuity is alive, or the EN pin is low (LP38693 only), and the output voltage is more than 500 mV (typical) above the input voltage the parasitic diode becomes forward biased and current flows from the output pin to the input pin through the diode. The current in the parasitic diode must be limited to less than 1-A continuous and 5-A peak.

   If used in a dual-supply system where the regulator output load is returned to a negative supply, the output pin must be diode-clamped to ground to limit the negative voltage transition. A Schottky diode is recommended for this protective clamp.

9.2 Typical Application

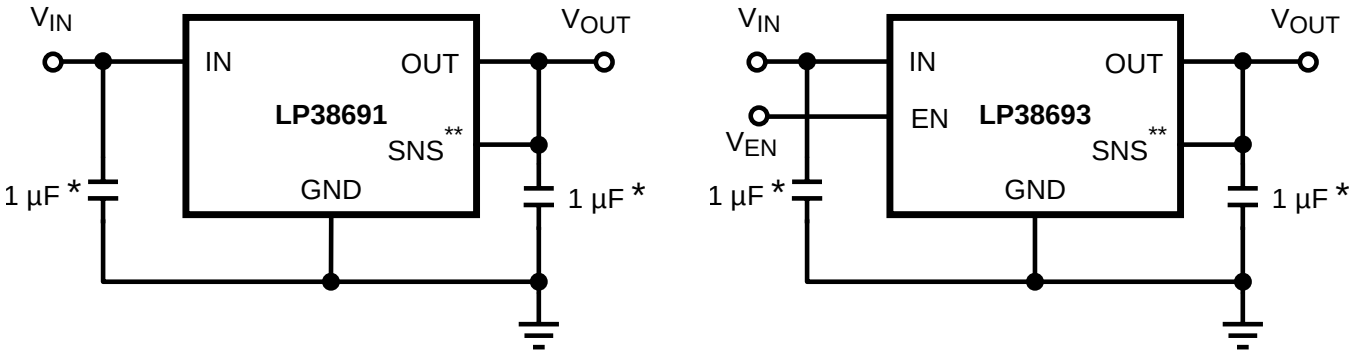

* Minimum value required for stability.
**WSON package devices only.

Copyright © 2005–2015, Texas Instruments Incorporated

9.2.1 Design Requirements

Table 1. Design Parameters

DESIGN PARAMETERS	EXAMPLE VALUE
Input voltage range	2.7 V to 10 V
Output range	1.8 V
Output current	1 A
Output capacitor range	1 µF
Input and output capacitor ESR range	5 mΩ to 500 mΩ

9.2.2 Detailed Design Procedure

9.2.2.1 Power Dissipation and Device Operation

The permissible power dissipation for any package is a measure of the capability of the device to pass heat from the power source, the junctions of the IC, to the ultimate heat sink, the ambient environment. Thus, the power dissipation is dependent on the ambient temperature and the thermal resistance across the various interfaces between the die junction and ambient air.

The maximum allowable power dissipation for the device in a given package can be calculated using Equation 1:

$$P_{D\text{-}MAX} = ((T_{J\text{-}MAX} - T_A) / R_{\theta JA}) \quad (1)$$

The actual power being dissipated in the device can be represented by Equation 2:

$$P_D = (V_{IN} - V_{OUT}) \times I_{OUT} \quad (2)$$

These two equations establish the relationship between the maximum power dissipation allowed due to thermal consideration, the voltage drop across the device, and the continuous current capability of the device. These two equations must be used to determine the optimum operating conditions for the device in the application.

In applications where lower power dissipation (P_D) and/or excellent package thermal resistance ($R_{\theta JA}$) is present, the maximum ambient temperature ($T_{A\text{-}MAX}$) may be increased.

In applications where high power dissipation and/or poor package thermal resistance is present, the maximum ambient temperature ($T_{A\text{-}MAX}$) may have to be derated. $T_{A\text{-}MAX}$ is dependent on the maximum operating junction temperature ($T_{J\text{-}MAX\text{-}OP}$ = 125°C), the maximum allowable power dissipation in the device package in the application ($P_{D\text{-}MAX}$), and the junction-to ambient thermal resistance of the part/package in the application ($R_{\theta JA}$), as given by Equation 3:

$$T_{A\text{-}MAX} = (T_{J\text{-}MAX\text{-}OP} - (R_{\theta JA} \times P_{D\text{-}MAX})) \quad (3)$$

Alternately, if $T_{A\text{-}MAX}$ can not be derated, the P_D value must be reduced. This can be accomplished by reducing V_{IN} in the $V_{IN} - V_{OUT}$ term as long as the minimum V_{IN} is met, or by reducing the I_{OUT} term, or by some combination of the two.

9.2.2.2 External Capacitors

In common with most regulators, the LP38691 and LP38693 require an external capacitors for regulator stability. The devices are specifically designed for portable applications requiring minimum board space and smallest components. These capacitors must be correctly selected for good performance.

9.2.2.3 Input Capacitor

An input capacitor is required for stability. TI recommends that a 1-µF capacitor be connected between the devices' IN pin and GND pin (this capacitance value may be increased without limit).

This capacitor must be located a distance of not more than 1 cm from the IN pin and returned to a clean analogue ground. Any good quality ceramic, tantalum, or film capacitor may be used at the input.

Copyright © 2005–2015, Texas Instruments Incorporated

Important: To ensure stable operation it is essential that good PCB design practices are employed to minimize ground impedance and keep input inductance low. If these conditions cannot be met, or if long leads are used to connect the battery or other power source to the LP38691 or LP38693, then TI recommends that the input capacitor is increased. Also, tantalum capacitors can suffer catastrophic failures due to surge current when connected to a low-impedance source of power (like a battery or a very large capacitor). If a tantalum capacitor is used at the input, it must be ensured by the manufacturer to have a surge current rating sufficient for the application.

There are no requirements for the equivalent series resistance (ESR) on the input capacitor, but tolerance and temperature coefficient must be considered when selecting the capacitor to ensure the capacitance remains approximately 1 µF over the entire operating temperature range.

9.2.2.4 Output Capacitor

The LP3869x is designed specifically to work with very small ceramic output capacitors. A 1-µF ceramic capacitor (temperature types Z5U, Y5V or X7R/X5R) with ESR between 5 mΩ to 500 mΩ, is suitable in the LP3869x application circuit.

For this device the output capacitor must be connected between the OUT pin and GND pin.

It is also possible to use tantalum or film capacitors at the device output, but these are not as attractive for reasons of size and cost.

The output capacitor must meet the requirement for the minimum value of capacitance and also have an ESR value that is within the range 5 mΩ to 500 mΩ for stability.

9.2.2.5 No-Load Stability

The LP3869x remains stable and in regulation with no external load. This is an important consideration in some circuits, for example CMOS RAM keep-alive applications.

9.2.2.6 Capacitor Characteristics

The LP3869x is designed to work with ceramic capacitors on the output to take advantage of the benefits they offer. For capacitance values in the range of 0.47 µF to 4.7 µF, ceramic capacitors are the smallest, least expensive and have the lowest ESR values, thus making them best for eliminating high frequency noise. The ESR of a typical 1-µF ceramic capacitor is in the range of 20 mΩ to 40 mΩ, which easily meets the ESR requirement for stability for the LP3869x.

For both input and output capacitors, careful interpretation of the capacitor specification is required to ensure correct device operation. The capacitor value can change greatly, depending on the operating conditions and capacitor type.

In particular, the output capacitor selection must take account of all the capacitor parameters, to ensure that the specification is met within the application. The capacitance can vary with DC bias conditions as well as temperature and frequency of operation. Capacitor values also show some decrease over time due to aging. The capacitor parameters are also dependent on the particular case size, with smaller sizes giving poorer performance figures in general. As an example, Figure 27 shows a typical graph comparing different capacitor case sizes in a Capacitance vs. DC Bias plot. As shown in the graph, increasing the DC Bias condition can result in the capacitance value falling below the minimum value given in the recommended capacitor specifications table (0.7 µF in this case). Note that the graph shows the capacitance out of specification for the 0402 case size capacitor at higher bias voltages. It is therefore recommended that the capacitor manufacturers' specifications for the nominal value capacitor are consulted for all conditions, as some capacitor sizes (for example, 0402) may not be suitable in the actual application.

Copyright © 2005–2015, Texas Instruments Incorporated

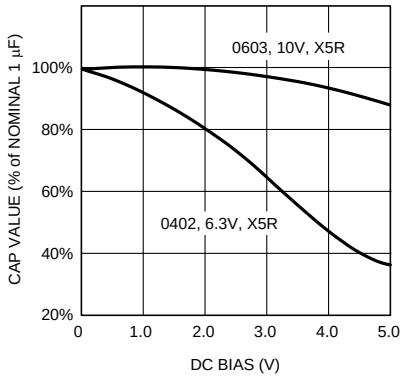

Figure 27. Typical Variation In Capacitance vs DC Bias

The value of the ceramic capacitor can vary with temperature. The capacitor type X7R, which operates over a temperature range of –55°C to 125°C, only varies the capacitance to within ±15%. The capacitor type X5R has a similar tolerance over a reduced temperature range of –55°C to 85°C. Many large value ceramic capacitors, larger than 1 µF, are manufactured with Z5U or Y5V temperature characteristics. Their capacitance can drop by more than 50% as the temperature varies from 25°C to 85°C. Therefore, X7R and X5R types are recommended over Z5U and Y5V in applications where the ambient temperature changes significantly above or below 25°C.

Tantalum capacitors are less desirable than ceramic for use as output capacitors because they are more costly when comparing equivalent capacitance and voltage ratings in the 0.47-µF to 4.7-µF range.

Another important consideration is that tantalum capacitors have higher ESR values than equivalent size ceramics. This means that while it may be possible to find a tantalum capacitor with an ESR value within the stable range, it would have to be larger in capacitance (which means bigger and more costly) than a ceramic capacitor with the same ESR value. It mustalso be noted that the ESR of a typical tantalum increases about 2:1 as the temperature goes from 25°C down to –40°C, so some guard band must be allowed.

9.2.2.7 RFI/EMI Susceptibility

Radio frequency interference (RFI) and electromagnetic interference (EMI) can degrade any integrated circuit's performance because of the small dimensions of the geometries inside the device. In applications where circuit sources are present which generate signals with significant high frequency energy content (> 1 MHz), care must be taken to ensure that this does not affect the device regulator.

If RFI/EMI noise is present on the input side of the regulator (such as applications where the input source comes from the output of a switching regulator), good ceramic bypass capacitors must be used at the input pin of the device.

If a load is connected to the device output which switches at high speed (such as a clock), the high-frequency current pulses required by the load must be supplied by the capacitors on the IC output. Because the bandwidth of the regulator loop is less than 100 kHz, the control circuitry cannot respond to load changes above that frequency. This means the effective output impedance of the device at frequencies above 100 kHz is determined only by the output capacitors.

In applications where the load is switching at high speed, the output of the IC may need RF isolation from the load. TI recommends that some inductance be placed between the output capacitor and the load, and good RF bypass capacitors be placed directly across the load.

PCB layout is also critical in high noise environments, because RFI/EMI is easily radiated directly into PC traces. Noisy circuitry must be isolated from *clean* circuits where possible, and grounded through a separate path. At MHz frequencies, ground planes begin to look inductive and RFI/ EMI can cause ground bounce across the ground plane. In multi-layer PCB applications, care must be taken in layout so that noisy power and ground planes do not radiate directly into adjacent layers which carry analog power and ground.

Copyright © 2005–2015, Texas Instruments Incorporated

9.2.2.8 Output Noise

Noise is specified in two ways: Spot Noise or Output Noise Density is the RMS sum of all noise sources, measured at the regulator output, at a specific frequency (measured with a 1-Hz bandwidth). This type of noise is usually plotted on a curve as a function of frequency. Total Output Noise or Broad-Band Noise is the RMS sum of spot noise over a specified bandwidth, usually several decades of frequencies.

Attention paid to the units of measurement. Spot noise is measured in units $\mu V\sqrt{Hz}$ or $nV\sqrt{Hz}$, and total output noise is measured in μV_{RMS}.

The primary source of noise in low-dropout regulators is the internal reference. Noise can be reduced in two ways: by increasing the transistor area or by increasing the current drawn by the internal reference. Increasing the area decreases the chance of fitting the die into a smaller package. Increasing the current drawn by the internal reference increases the total supply current (GND pin current).

9.2.3 Application Curves

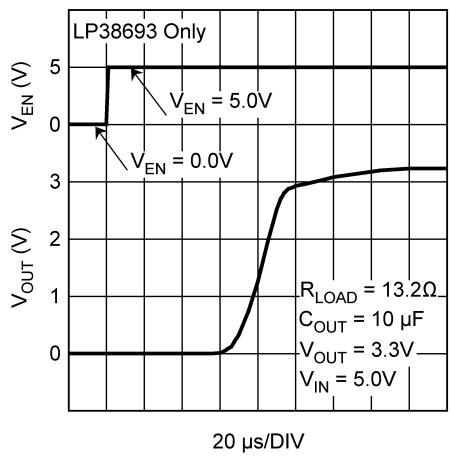

Figure 28. V_{OUT} vs V_{EN}, ON (LP38693 Only)

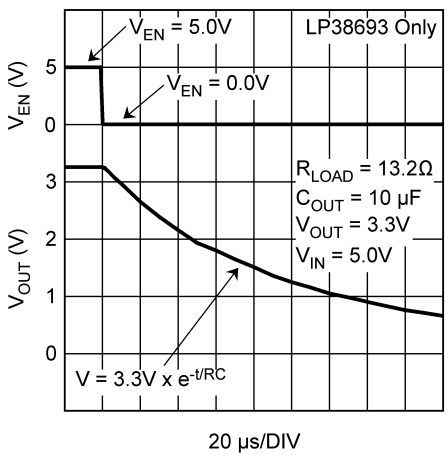

Figure 29. V_{OUT} vs V_{EN}, OFF (LP38693 Only)

Copyright © 2005–2015, Texas Instruments Incorporated

10 Power Supply Recommendations

The LP38691 and LP38693 are designed to operate from an input supply voltage range of 2.7 V to 10 V. The input supply must be well regulated and free of spurious noise. To ensure that the device output voltage is well regulated, input supply must be at least V_{OUT} + 0.5 V, or 2.7 V, whichever is higher. A minimum capacitor value of 1-µF is required to be within 1 cm of the IN pin.

11 Layout

11.1 Layout Guidelines

The dynamic performance of the LP38691 or LP38693 is dependent on the layout of the PCB. PCB layout practices that are adequate for typical LDOs may degrade the load regulation, PSRR, noise, or transient performance of the LP38691 or LP38693.

Best performance is achieved by placing C_{IN} and C_{OUT} on the same side of the PCB as the LP38691 or LP38693, and as close to the package as is practical. The ground connections for C_{IN} and C_{OUT} must be back to the LP38691 or LP38693 GND pin using as wide, and as short, a copper trace as is practical.

Connections using long trace lengths, narrow trace widths, or connections through vias must be avoided. These add parasitic inductances and resistance that result in inferior performance especially during transient conditions.

A Ground Plane, either on the opposite side of a two-layer PCB, or embedded in a multi-layer PCB, is strongly recommended. This Ground Plane serves two purposes:

- Provides a circuit reference plane to assure accuracy.
- Provides a thermal plane to remove heat from the LP38691 or LP38693 WSON package through thermal vias under the package DAP.

11.2 Layout Example

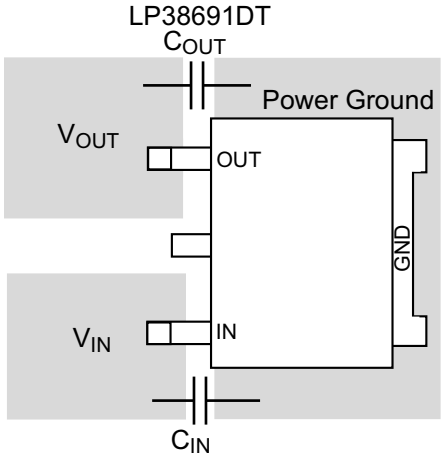

Figure 30. TO-252 Package

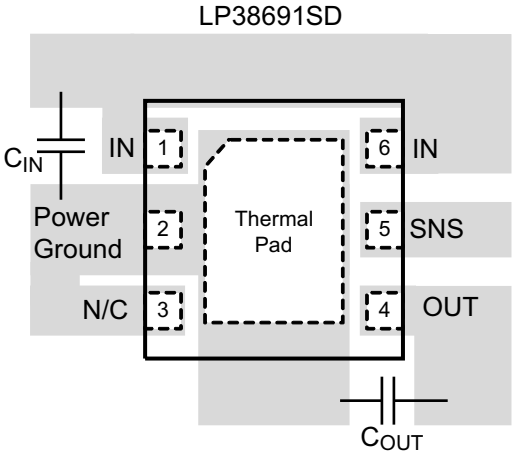

Figure 31. WSON LP38691 Layout

Layout Example (continued)

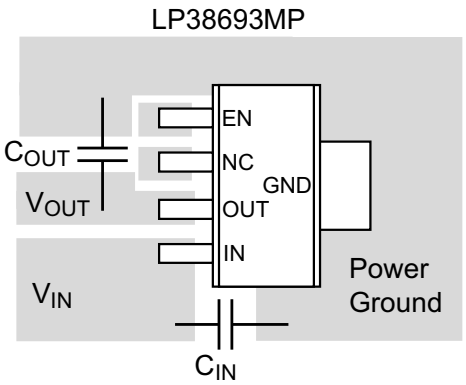

Figure 32. SOT-223 Layout

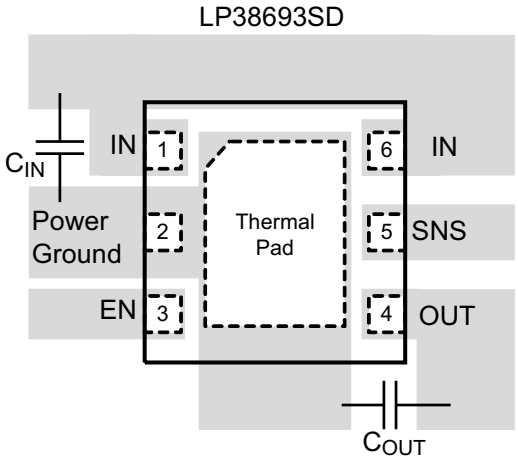

Figure 33. WSON LP38693 Layout

11.3 WSON Mounting

The NGG0006A (No Pullback) 6-Lead WSON package requires specific mounting techniques which are detailed in the TI *AN-1187 Application Report* SNOA401. Referring to the section *PCB Design Recommendations*, note that the pad style which must be used with the WSON package is the NSMD (non-solder mask defined) type. Additionally, TI recommends the PCB terminal pads to be 0.2 mm longer than the package pads to create a solder fillet to improve reliability and inspection.

The input current is split between two IN pins, 1 and 6. The two IN pins must be connected together to ensure that the device can meet all specifications at the rated current.

The thermal dissipation of the WSON package is directly related to the printed circuit board construction and the amount of additional copper area connected to the DAP.

The DAP (exposed pad) on the bottom of the WSON package is connected to the die substrate with a conductive die attach adhesive. The DAP has no direct electrical (wire) connection to any of the pins. There is a parasitic PN junction between the die substrate and the device ground. As such, it is strongly recommend that the DAP be connected directly to the ground at device lead 2 (that is, GND). Alternately, but not recommended, the DAP may be left floating (that is, no electrical connection). The DAP must not be connected to any potential other than ground.

Copyright © 2005–2015, Texas Instruments Incorporated

12 Device and Documentation Support

12.1 Documentation Support

12.1.1 Related Documentation

For related documentation see the following:

Texas Instruments AN-1187 *Leadless Leadframe Package (LLP)* (SNOA401).

12.2 Related Links

The table below lists quick access links. Categories include technical documents, support and community resources, tools and software, and quick access to sample or buy.

Table 2. Related Links

PARTS	PRODUCT FOLDER	SAMPLE & BUY	TECHNICAL DOCUMENTS	TOOLS & SOFTWARE	SUPPORT & COMMUNITY
LP38691	Click here	Click here	Click here	Click here	Click here
LP38693	Click here	Click here	Click here	Click here	Click here
LP38691-Q1	Click here	Click here	Click here	Click here	Click here
LP38693-Q1	Click here	Click here	Click here	Click here	Click here

12.3 Community Resources

The following links connect to TI community resources. Linked contents are provided "AS IS" by the respective contributors. They do not constitute TI specifications and do not necessarily reflect TI's views; see TI's Terms of Use.

TI E2E™ Online Community ***TI's Engineer-to-Engineer (E2E) Community.*** Created to foster collaboration among engineers. At e2e.ti.com, you can ask questions, share knowledge, explore ideas and help solve problems with fellow engineers.

Design Support ***TI's Design Support*** Quickly find helpful E2E forums along with design support tools and contact information for technical support.

12.4 Trademarks

E2E is a trademark of Texas Instruments.
All other trademarks are the property of their respective owners.

12.5 Electrostatic Discharge Caution

These devices have limited built-in ESD protection. The leads should be shorted together or the device placed in conductive foam during storage or handling to prevent electrostatic damage to the MOS gates.

12.6 Glossary

SLYZ022 — *TI Glossary*.

This glossary lists and explains terms, acronyms, and definitions.

13 Mechanical, Packaging, and Orderable Information

The following pages include mechanical, packaging, and orderable information. This information is the most current data available for the designated devices. This data is subject to change without notice and revision of this document. For browser-based versions of this data sheet, refer to the left-hand navigation.

PACKAGING INFORMATION

Orderable part number	Status (1)	Material type (2)	Package | Pins	Package qty | Carrier	RoHS (3)	Lead finish/ Ball material (4)	MSL rating/ Peak reflow (5)	Op temp (°C)	Part marking (6)
LP38691DT-1.8/NOPB	Active	Production	TO-252 (NDP) | 3	75 | TUBE	Yes	SN	Level-2-260C-1 YEAR	-40 to 125	LP38691 DT-1.8
LP38691DT-1.8/NOPB.A	Active	Production	TO-252 (NDP) | 3	75 | TUBE	Yes	SN	Level-2-260C-1 YEAR	-40 to 125	LP38691 DT-1.8
LP38691DT-1.8/NOPB.B	Active	Production	TO-252 (NDP) | 3	75 | TUBE	Yes	SN	Level-2-260C-1 YEAR	-40 to 125	LP38691 DT-1.8
LP38691DT-2.5/NOPB	Active	Production	TO-252 (NDP) | 3	75 | TUBE	Yes	SN	Level-2-260C-1 YEAR	-40 to 125	LP38691 DT-2.5
LP38691DT-2.5/NOPB.A	Active	Production	TO-252 (NDP) | 3	75 | TUBE	Yes	SN	Level-2-260C-1 YEAR	-40 to 125	LP38691 DT-2.5
LP38691DT-2.5/NOPB.B	Active	Production	TO-252 (NDP) | 3	75 | TUBE	Yes	SN	Level-2-260C-1 YEAR	-40 to 125	LP38691 DT-2.5
LP38691DT-3.3/NOPB	Active	Production	TO-252 (NDP) | 3	75 | TUBE	Yes	SN	Level-2-260C-1 YEAR	-40 to 125	LP38691 DT-3.3
LP38691DT-3.3/NOPB.A	Active	Production	TO-252 (NDP) | 3	75 | TUBE	Yes	SN	Level-2-260C-1 YEAR	-40 to 125	LP38691 DT-3.3
LP38691DT-3.3/NOPB.B	Active	Production	TO-252 (NDP) | 3	75 | TUBE	Yes	SN	Level-2-260C-1 YEAR	-40 to 125	LP38691 DT-3.3
LP38691DT-5.0/NOPB	Active	Production	TO-252 (NDP) | 3	75 | TUBE	Yes	SN	Level-2-260C-1 YEAR	-40 to 125	LP38691 DT-5.0
LP38691DT-5.0/NOPB.A	Active	Production	TO-252 (NDP) | 3	75 | TUBE	Yes	SN	Level-2-260C-1 YEAR	-40 to 125	LP38691 DT-5.0
LP38691DT-5.0/NOPB.B	Active	Production	TO-252 (NDP) | 3	75 | TUBE	Yes	SN	Level-2-260C-1 YEAR	-40 to 125	LP38691 DT-5.0
LP38691DTX-1.8/NO.A	Active	Production	TO-252 (NDP) | 3	2500 | LARGE T&R	Yes	SN	Level-2-260C-1 YEAR	-40 to 125	LP38691 DT-1.8
LP38691DTX-1.8/NOPB	Active	Production	TO-252 (NDP) | 3	2500 | LARGE T&R	Yes	SN	Level-2-260C-1 YEAR	-40 to 125	LP38691 DT-1.8
LP38691DTX-2.5/NO.A	Active	Production	TO-252 (NDP) | 3	2500 | LARGE T&R	Yes	SN	Level-2-260C-1 YEAR	-40 to 125	LP38691 DT-2.5
LP38691DTX-2.5/NOPB	Active	Production	TO-252 (NDP) | 3	2500 | LARGE T&R	Yes	SN	Level-2-260C-1 YEAR	-40 to 125	LP38691 DT-2.5

Orderable part number	Status (1)	Material type (2)	Package | Pins	Package qty | Carrier	RoHS (3)	Lead finish/ Ball material (4)	MSL rating/ Peak reflow (5)	Op temp (°C)	Part marking (6)
LP38691DTX-3.3/NO.A	Active	Production	TO-252 (NDP) | 3	2500 | LARGE T&R	Yes	SN	Level-2-260C-1 YEAR	-40 to 125	LP38691 DT-3.3
LP38691DTX-3.3/NOPB	Active	Production	TO-252 (NDP) | 3	2500 | LARGE T&R	Yes	SN	Level-2-260C-1 YEAR	-40 to 125	LP38691 DT-3.3
LP38691DTX-5.0/NO.A	Active	Production	TO-252 (NDP) | 3	2500 | LARGE T&R	Yes	SN	Level-2-260C-1 YEAR	-40 to 125	LP38691 DT-5.0
LP38691DTX-5.0/NO.B	Active	Production	TO-252 (NDP) | 3	2500 | LARGE T&R	Yes	SN	Level-2-260C-1 YEAR	-40 to 125	LP38691 DT-5.0
LP38691DTX-5.0/NOPB	Active	Production	TO-252 (NDP) | 3	2500 | LARGE T&R	Yes	SN	Level-2-260C-1 YEAR	-40 to 125	LP38691 DT-5.0
LP38691QSD-1.8/NO.A	Active	Production	WSON (NGG) | 6	1000 | SMALL T&R	Yes	SN	Level-1-260C-UNLIM	-40 to 125	L256B
LP38691QSD-1.8/NOPB	Active	Production	WSON (NGG) | 6	1000 | SMALL T&R	Yes	SN	Level-1-260C-UNLIM	-40 to 125	L256B
LP38691QSD-2.5/NO.A	Active	Production	WSON (NGG) | 6	1000 | SMALL T&R	Yes	SN	Level-1-260C-UNLIM	-40 to 125	L257B
LP38691QSD-2.5/NOPB	Active	Production	WSON (NGG) | 6	1000 | SMALL T&R	Yes	SN	Level-1-260C-UNLIM	-40 to 125	L257B
LP38691QSD-3.3/NO.A	Active	Production	WSON (NGG) | 6	1000 | SMALL T&R	Yes	SN	Level-1-260C-UNLIM	-40 to 125	L258B
LP38691QSD-3.3/NOPB	Active	Production	WSON (NGG) | 6	1000 | SMALL T&R	Yes	SN	Level-1-260C-UNLIM	-40 to 125	L258B
LP38691QSD-5.0/NO.A	Active	Production	WSON (NGG) | 6	1000 | SMALL T&R	Yes	SN	Level-1-260C-UNLIM	-40 to 125	L259B
LP38691QSD-5.0/NOPB	Active	Production	WSON (NGG) | 6	1000 | SMALL T&R	Yes	SN	Level-1-260C-UNLIM	-40 to 125	L259B
LP38691QSDX-1.8/NO.A	Active	Production	WSON (NGG) | 6	4500 | LARGE T&R	Yes	SN	Level-1-260C-UNLIM	-40 to 125	L256B
LP38691QSDX-1.8/NOPB	Active	Production	WSON (NGG) | 6	4500 | LARGE T&R	Yes	SN	Level-1-260C-UNLIM	-40 to 125	L256B
LP38691QSDX-2.5/NO.A	Active	Production	WSON (NGG) | 6	4500 | LARGE T&R	Yes	SN	Level-1-260C-UNLIM	-40 to 125	L257B
LP38691QSDX-2.5/NOPB	Active	Production	WSON (NGG) | 6	4500 | LARGE T&R	Yes	SN	Level-1-260C-UNLIM	-40 to 125	L257B
LP38691QSDX-3.3/NO.A	Active	Production	WSON (NGG) | 6	4500 | LARGE T&R	Yes	SN	Level-1-260C-UNLIM	-40 to 125	L258B
LP38691QSDX-3.3/NOPB	Active	Production	WSON (NGG) | 6	4500 | LARGE T&R	Yes	SN	Level-1-260C-UNLIM	-40 to 125	L258B
LP38691QSDX-5.0/NO.A	Active	Production	WSON (NGG) | 6	4500 | LARGE T&R	Yes	SN	Level-1-260C-UNLIM	-40 to 125	L259B
LP38691QSDX-5.0/NOPB	Active	Production	WSON (NGG) | 6	4500 | LARGE T&R	Yes	SN	Level-1-260C-UNLIM	-40 to 125	L259B
LP38691SD-1.8/NOPB	Active	Production	WSON (NGG) | 6	1000 | SMALL T&R	Yes	NIPDAU | SN	Level-1-260C-UNLIM	-40 to 125	L118B
LP38691SD-1.8/NOPB.A	Active	Production	WSON (NGG) | 6	1000 | SMALL T&R	Yes	SN	Level-1-260C-UNLIM	-40 to 125	L118B
LP38691SD-1.8/NOPB.B	Active	Production	WSON (NGG) | 6	1000 | SMALL T&R	Yes	SN	Level-1-260C-UNLIM	-40 to 125	L118B
LP38691SD-2.5/NOPB	Active	Production	WSON (NGG) | 6	1000 | SMALL T&R	Yes	NIPDAU | SN	Level-1-260C-UNLIM	-40 to 125	L119B
LP38691SD-2.5/NOPB.A	Active	Production	WSON (NGG) | 6	1000 | SMALL T&R	Yes	SN	Level-1-260C-UNLIM	-40 to 125	L119B
LP38691SD-2.5/NOPB.B	Active	Production	WSON (NGG) | 6	1000 | SMALL T&R	Yes	SN	Level-1-260C-UNLIM	-40 to 125	L119B

Orderable part number	Status (1)	Material type (2)	Package | Pins	Package qty | Carrier	RoHS (3)	Lead finish/ Ball material (4)	MSL rating/ Peak reflow (5)	Op temp (°C)	Part marking (6)
LP38691SD-3.3/NOPB	Active	Production	WSON (NGG) | 6	1000 | SMALL T&R	Yes	NIPDAU | SN	Level-1-260C-UNLIM	-40 to 125	L120B
LP38691SD-3.3/NOPB.A	Active	Production	WSON (NGG) | 6	1000 | SMALL T&R	Yes	SN	Level-1-260C-UNLIM	-40 to 125	L120B
LP38691SD-3.3/NOPB.B	Active	Production	WSON (NGG) | 6	1000 | SMALL T&R	Yes	SN	Level-1-260C-UNLIM	-40 to 125	L120B
LP38691SD-5.0/NOPB	Active	Production	WSON (NGG) | 6	1000 | SMALL T&R	Yes	NIPDAU | SN	Level-1-260C-UNLIM	-40 to 125	L121B
LP38691SD-5.0/NOPB.A	Active	Production	WSON (NGG) | 6	1000 | SMALL T&R	Yes	SN	Level-1-260C-UNLIM	-40 to 125	L121B
LP38691SD-5.0/NOPB.B	Active	Production	WSON (NGG) | 6	1000 | SMALL T&R	Yes	SN	Level-1-260C-UNLIM	-40 to 125	L121B
LP38691SDX-1.8/NO.A	Active	Production	WSON (NGG) | 6	4500 | LARGE T&R	Yes	SN	Level-1-260C-UNLIM	-40 to 125	L118B
LP38691SDX-1.8/NOPB	Active	Production	WSON (NGG) | 6	4500 | LARGE T&R	Yes	SN	Level-1-260C-UNLIM	-40 to 125	L118B
LP38691SDX-3.3/NO.A	Active	Production	WSON (NGG) | 6	4500 | LARGE T&R	Yes	SN	Level-1-260C-UNLIM	-40 to 125	L120B
LP38691SDX-3.3/NOPB	Active	Production	WSON (NGG) | 6	4500 | LARGE T&R	Yes	SN	Level-1-260C-UNLIM	-40 to 125	L120B
LP38691SDX-5.0/NO.A	Active	Production	WSON (NGG) | 6	4500 | LARGE T&R	Yes	SN	Level-1-260C-UNLIM	-40 to 125	L121B
LP38691SDX-5.0/NOPB	Active	Production	WSON (NGG) | 6	4500 | LARGE T&R	Yes	NIPDAU | SN	Level-1-260C-UNLIM	-40 to 125	L121B
LP38693MP-1.8/NOPB	Active	Production	SOT-223 (NDC) | 5	1000 | SMALL T&R	Yes	SN	Level-1-260C-UNLIM	-40 to 125	LJVB
LP38693MP-1.8/NOPB.A	Active	Production	SOT-223 (NDC) | 5	1000 | SMALL T&R	Yes	SN	Level-1-260C-UNLIM	See LP38693MP-1.8/ NOPB	LJVB
LP38693MP-1.8/NOPB.B	Active	Production	SOT-223 (NDC) | 5	1000 | SMALL T&R	Yes	SN	Level-1-260C-UNLIM	See LP38693MP-1.8/ NOPB	LJVB
LP38693MP-2.5/NOPB	Active	Production	SOT-223 (NDC) | 5	1000 | SMALL T&R	Yes	SN	Level-1-260C-UNLIM	-40 to 125	LJXB
LP38693MP-2.5/NOPB.A	Active	Production	SOT-223 (NDC) | 5	1000 | SMALL T&R	Yes	SN	Level-1-260C-UNLIM	See LP38693MP-2.5/ NOPB	LJXB
LP38693MP-3.3/NOPB	Active	Production	SOT-223 (NDC) | 5	1000 | SMALL T&R	Yes	SN	Level-1-260C-UNLIM	-40 to 125	LJYB
LP38693MP-3.3/NOPB.A	Active	Production	SOT-223 (NDC) | 5	1000 | SMALL T&R	Yes	SN	Level-1-260C-UNLIM	See LP38693MP-3.3/ NOPB	LJYB
LP38693MP-3.3/NOPB.B	Active	Production	SOT-223 (NDC) | 5	1000 | SMALL T&R	Yes	SN	Level-1-260C-UNLIM	See LP38693MP-3.3/ NOPB	LJYB
LP38693MP-5.0/NOPB	Active	Production	SOT-223 (NDC) | 5	1000 | SMALL T&R	Yes	SN	Level-1-260C-UNLIM	-40 to 125	LJZB
LP38693MP-5.0/NOPB.A	Active	Production	SOT-223 (NDC) | 5	1000 | SMALL T&R	Yes	SN	Level-1-260C-UNLIM	See LP38693MP-5.0/ NOPB	LJZB
LP38693MP-5.0/NOPB.B	Active	Production	SOT-223 (NDC) | 5	1000 | SMALL T&R	Yes	SN	Level-1-260C-UNLIM	See LP38693MP-5.0/ NOPB	LJZB
LP38693MPX-1.8/NO.A	Active	Production	SOT-223 (NDC) | 5	2000 | LARGE T&R	Yes	SN	Level-1-260C-UNLIM	See LP38693MPX-1.8/NO	LJVB
LP38693MPX-1.8/NOPB	Active	Production	SOT-223 (NDC) | 5	2000 | LARGE T&R	Yes	SN	Level-1-260C-UNLIM	-40 to 125	LJVB

Orderable part number	Status (1)	Material type (2)	Package | Pins	Package qty | Carrier	RoHS (3)	Lead finish/ Ball material (4)	MSL rating/ Peak reflow (5)	Op temp (°C)	Part marking (6)
LP38693MPX-2.5/NO.A	Active	Production	SOT-223 (NDC) | 5	2000 | LARGE T&R	Yes	SN	Level-1-260C-UNLIM	See LP38693MPX-2.5/NO	LJXB
LP38693MPX-2.5/NOPB	Active	Production	SOT-223 (NDC) | 5	2000 | LARGE T&R	Yes	SN	Level-1-260C-UNLIM	-40 to 125	LJXB
LP38693MPX-3.3/NO.A	Active	Production	SOT-223 (NDC) | 5	2000 | LARGE T&R	Yes	SN	Level-1-260C-UNLIM	See LP38693MPX-3.3/NO	LJYB
LP38693MPX-3.3/NOPB	Active	Production	SOT-223 (NDC) | 5	2000 | LARGE T&R	Yes	SN	Level-1-260C-UNLIM	-40 to 125	LJYB
LP38693MPX-5.0/NO.A	Active	Production	SOT-223 (NDC) | 5	2000 | LARGE T&R	Yes	SN	Level-1-260C-UNLIM	See LP38693MPX-5.0/NO	LJZB
LP38693MPX-5.0/NO.B	Active	Production	SOT-223 (NDC) | 5	2000 | LARGE T&R	Yes	SN	Level-1-260C-UNLIM	See LP38693MPX-5.0/NO	LJZB
LP38693MPX-5.0/NOPB	Active	Production	SOT-223 (NDC) | 5	2000 | LARGE T&R	Yes	SN	Level-1-260C-UNLIM	-40 to 125	LJZB
LP38693QSD-1.8/NO.A	Active	Production	WSON (NGG) | 6	1000 | SMALL T&R	Yes	SN	Level-1-260C-UNLIM	-40 to 125	L260B
LP38693QSD-1.8/NOPB	Active	Production	WSON (NGG) | 6	1000 | SMALL T&R	Yes	SN	Level-1-260C-UNLIM	-40 to 125	L260B
LP38693QSD-2.5/NO.A	Active	Production	WSON (NGG) | 6	1000 | SMALL T&R	Yes	SN	Level-1-260C-UNLIM	-40 to 125	L261B
LP38693QSD-2.5/NOPB	Active	Production	WSON (NGG) | 6	1000 | SMALL T&R	Yes	SN	Level-1-260C-UNLIM	-40 to 125	L261B
LP38693QSD-3.3/NO.A	Active	Production	WSON (NGG) | 6	1000 | SMALL T&R	Yes	SN	Level-1-260C-UNLIM	-40 to 125	L262B
LP38693QSD-3.3/NOPB	Active	Production	WSON (NGG) | 6	1000 | SMALL T&R	Yes	SN	Level-1-260C-UNLIM	-40 to 125	L262B
LP38693QSD-5.0/NO.A	Active	Production	WSON (NGG) | 6	1000 | SMALL T&R	Yes	SN	Level-1-260C-UNLIM	-40 to 125	L263B
LP38693QSD-5.0/NOPB	Active	Production	WSON (NGG) | 6	1000 | SMALL T&R	Yes	SN	Level-1-260C-UNLIM	-40 to 125	L263B
LP38693QSDX-1.8/NO.A	Active	Production	WSON (NGG) | 6	4500 | LARGE T&R	Yes	SN	Level-1-260C-UNLIM	-40 to 125	L260B
LP38693QSDX-1.8/NOPB	Active	Production	WSON (NGG) | 6	4500 | LARGE T&R	Yes	SN	Level-1-260C-UNLIM	-40 to 125	L260B
LP38693QSDX-2.5/NO.A	Active	Production	WSON (NGG) | 6	4500 | LARGE T&R	Yes	SN	Level-1-260C-UNLIM	-40 to 125	L261B
LP38693QSDX-2.5/NOPB	Active	Production	WSON (NGG) | 6	4500 | LARGE T&R	Yes	SN	Level-1-260C-UNLIM	-40 to 125	L261B
LP38693QSDX-3.3/NO.A	Active	Production	WSON (NGG) | 6	4500 | LARGE T&R	Yes	SN	Level-1-260C-UNLIM	-40 to 125	L262B
LP38693QSDX-3.3/NOPB	Active	Production	WSON (NGG) | 6	4500 | LARGE T&R	Yes	SN	Level-1-260C-UNLIM	-40 to 125	L262B
LP38693QSDX-5.0/NO.A	Active	Production	WSON (NGG) | 6	4500 | LARGE T&R	Yes	SN	Level-1-260C-UNLIM	-40 to 125	L263B
LP38693QSDX-5.0/NOPB	Active	Production	WSON (NGG) | 6	4500 | LARGE T&R	Yes	SN	Level-1-260C-UNLIM	-40 to 125	L263B
LP38693SD-1.8/NOPB	Active	Production	WSON (NGG) | 6	1000 | SMALL T&R	Yes	NIPDAU | SN	Level-1-260C-UNLIM	-40 to 125	L128B
LP38693SD-1.8/NOPB.A	Active	Production	WSON (NGG) | 6	1000 | SMALL T&R	Yes	SN	Level-1-260C-UNLIM	See LP38693SD-1.8/ NOPB	L128B
LP38693SD-1.8/NOPB.B	Active	Production	WSON (NGG) | 6	1000 | SMALL T&R	Yes	SN	Level-1-260C-UNLIM	See LP38693SD-1.8/ NOPB	L128B

Orderable part number	Status (1)	Material type (2)	Package | Pins	Package qty | Carrier	RoHS (3)	Lead finish/ Ball material (4)	MSL rating/ Peak reflow (5)	Op temp (°C)	Part marking (6)
LP38693SD-2.5/NOPB	Active	Production	WSON (NGG) | 6	1000 | SMALL T&R	Yes	SN	Level-1-260C-UNLIM	-40 to 125	L129B
LP38693SD-2.5/NOPB.A	Active	Production	WSON (NGG) | 6	1000 | SMALL T&R	Yes	SN	Level-1-260C-UNLIM	See LP38693SD-2.5/ NOPB	L129B
LP38693SD-3.3/NOPB	Active	Production	WSON (NGG) | 6	1000 | SMALL T&R	Yes	NIPDAU | SN	Level-1-260C-UNLIM	-40 to 125	L130B
LP38693SD-3.3/NOPB.A	Active	Production	WSON (NGG) | 6	1000 | SMALL T&R	Yes	SN	Level-1-260C-UNLIM	See LP38693SD-3.3/ NOPB	L130B
LP38693SD-3.3/NOPB.B	Active	Production	WSON (NGG) | 6	1000 | SMALL T&R	Yes	SN	Level-1-260C-UNLIM	See LP38693SD-3.3/ NOPB	L130B
LP38693SD-5.0/NOPB	Active	Production	WSON (NGG) | 6	1000 | SMALL T&R	Yes	NIPDAU | SN	Level-1-260C-UNLIM	-40 to 125	L131B
LP38693SD-5.0/NOPB.A	Active	Production	WSON (NGG) | 6	1000 | SMALL T&R	Yes	SN	Level-1-260C-UNLIM	See LP38693SD-5.0/ NOPB	L131B
LP38693SD-5.0/NOPB.B	Active	Production	WSON (NGG) | 6	1000 | SMALL T&R	Yes	SN	Level-1-260C-UNLIM	See LP38693SD-5.0/ NOPB	L131B
LP38693SDX-3.3/NO.A	Active	Production	WSON (NGG) | 6	4500 | LARGE T&R	Yes	SN	Level-1-260C-UNLIM	See LP38693SDX-3.3/NO	L130B
LP38693SDX-3.3/NOPB	Active	Production	WSON (NGG) | 6	4500 | LARGE T&R	Yes	NIPDAU | SN	Level-1-260C-UNLIM	-40 to 125	L130B
LP38693SDX-5.0/NO.A	Active	Production	WSON (NGG) | 6	4500 | LARGE T&R	Yes	SN	Level-1-260C-UNLIM	See LP38693SDX-5.0/NO	L131B
LP38693SDX-5.0/NOPB	Active	Production	WSON (NGG) | 6	4500 | LARGE T&R	Yes	SN	Level-1-260C-UNLIM	-40 to 125	L131B

(1) **Status:** For more details on status, see our product life cycle.

(2) **Material type:** When designated, preproduction parts are prototypes/experimental devices, and are not yet approved or released for full production. Testing and final process, including without limitation quality assurance, reliability performance testing, and/or process qualification, may not yet be complete, and this item is subject to further changes or possible discontinuation. If available for ordering, purchases will be subject to an additional waiver at checkout, and are intended for early internal evaluation purposes only. These items are sold without warranties of any kind.

(3) **RoHS values:** Yes, No, RoHS Exempt. See the TI RoHS Statement for additional information and value definition.

(4) **Lead finish/Ball material:** Parts may have multiple material finish options. Finish options are separated by a vertical ruled line. Lead finish/Ball material values may wrap to two lines if the finish value exceeds the maximum column width.

(5) **MSL rating/Peak reflow:** The moisture sensitivity level ratings and peak solder (reflow) temperatures. In the event that a part has multiple moisture sensitivity ratings, only the lowest level per JEDEC standards is shown. Refer to the shipping label for the actual reflow temperature that will be used to mount the part to the printed circuit board.

(6) **Part marking:** There may be an additional marking, which relates to the logo, the lot trace code information, or the environmental category of the part.

Multiple part markings will be inside parentheses. Only one part marking contained in parentheses and separated by a "~" will appear on a part. If a line is indented then it is a continuation of the previous line and the two combined represent the entire part marking for that device.

Important Information and Disclaimer: The information provided on this page represents TI's knowledge and belief as of the date that it is provided. TI bases its knowledge and belief on information provided by third parties, and makes no representation or warranty as to the accuracy of such information. Efforts are underway to better integrate information from third parties. TI has taken and continues to take reasonable steps to provide representative and accurate information but may not have conducted destructive testing or chemical analysis on incoming materials and chemicals. TI and TI suppliers consider certain information to be proprietary, and thus CAS numbers and other limited information may not be available for release.

In no event shall TI's liability arising out of such information exceed the total purchase price of the TI part(s) at issue in this document sold by TI to Customer on an annual basis.

OTHER QUALIFIED VERSIONS OF LP38691, LP38691-Q1, LP38693, LP38693-Q1 :

- Catalog : LP38691, LP38693
- Automotive : LP38691-Q1, LP38693-Q1

NOTE: Qualified Version Definitions:

- Catalog - TI's standard catalog product
- Automotive - Q100 devices qualified for high-reliability automotive applications targeting zero defects

TAPE AND REEL INFORMATION

REEL DIMENSIONS

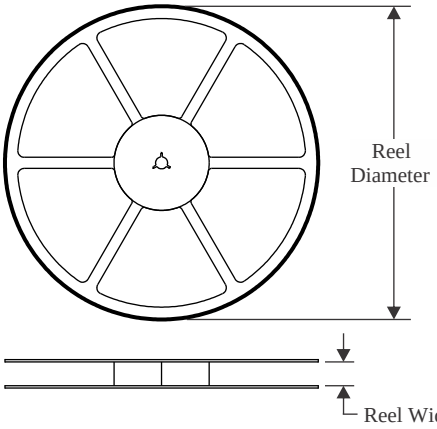

TAPE DIMENSIONS

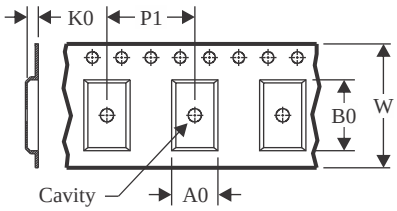

A0	Dimension designed to accommodate the component width
B0	Dimension designed to accommodate the component length
K0	Dimension designed to accommodate the component thickness
W	Overall width of the carrier tape
P1	Pitch between successive cavity centers

QUADRANT ASSIGNMENTS FOR PIN 1 ORIENTATION IN TAPE

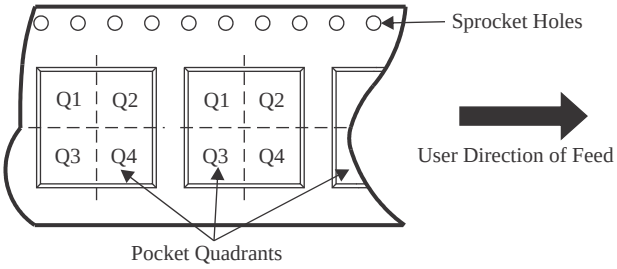

*All dimensions are nominal

Device	Package Type	Package Drawing	Pins	SPQ	Reel Diameter (mm)	Reel Width W1 (mm)	A0 (mm)	B0 (mm)	K0 (mm)	P1 (mm)	W (mm)	Pin1 Quadrant
LP38691DTX-1.8/NOPB	TO-252	NDP	3	2500	330.0	16.4	6.9	10.5	2.7	8.0	16.0	Q2
LP38691DTX-2.5/NOPB	TO-252	NDP	3	2500	330.0	16.4	6.9	10.5	2.7	8.0	16.0	Q2
LP38691DTX-3.3/NOPB	TO-252	NDP	3	2500	330.0	16.4	6.9	10.5	2.7	8.0	16.0	Q2
LP38691DTX-5.0/NOPB	TO-252	NDP	3	2500	330.0	16.4	6.9	10.5	2.7	8.0	16.0	Q2
LP38691QSD-1.8/NOPB	WSON	NGG	6	1000	177.8	12.4	3.3	3.3	1.0	8.0	12.0	Q1
LP38691QSD-2.5/NOPB	WSON	NGG	6	1000	177.8	12.4	3.3	3.3	1.0	8.0	12.0	Q1
LP38691QSD-3.3/NOPB	WSON	NGG	6	1000	177.8	12.4	3.3	3.3	1.0	8.0	12.0	Q1
LP38691QSD-5.0/NOPB	WSON	NGG	6	1000	177.8	12.4	3.3	3.3	1.0	8.0	12.0	Q1
LP38691QSDX-1.8/NOPB	WSON	NGG	6	4500	330.0	12.4	3.3	3.3	1.0	8.0	12.0	Q1
LP38691QSDX-2.5/NOPB	WSON	NGG	6	4500	330.0	12.4	3.3	3.3	1.0	8.0	12.0	Q1
LP38691QSDX-3.3/NOPB	WSON	NGG	6	4500	330.0	12.4	3.3	3.3	1.0	8.0	12.0	Q1
LP38691QSDX-5.0/NOPB	WSON	NGG	6	4500	330.0	12.4	3.3	3.3	1.0	8.0	12.0	Q1
LP38691SD-1.8/NOPB	WSON	NGG	6	1000	180.0	12.4	3.3	3.3	1.0	8.0	12.0	Q1
LP38691SD-1.8/NOPB	WSON	NGG	6	1000	177.8	12.4	3.3	3.3	1.0	8.0	12.0	Q1
LP38691SD-2.5/NOPB	WSON	NGG	6	1000	180.0	12.4	3.3	3.3	1.0	8.0	12.0	Q1
LP38691SD-2.5/NOPB	WSON	NGG	6	1000	177.8	12.4	3.3	3.3	1.0	8.0	12.0	Q1

Device	Package Type	Package Drawing	Pins	SPQ	Reel Diameter (mm)	Reel Width W1 (mm)	A0 (mm)	B0 (mm)	K0 (mm)	P1 (mm)	W (mm)	Pin1 Quadrant
LP38691SD-3.3/NOPB	WSON	NGG	6	1000	177.8	12.4	3.3	3.3	1.0	8.0	12.0	Q1
LP38691SD-3.3/NOPB	WSON	NGG	6	1000	180.0	12.4	3.3	3.3	1.0	8.0	12.0	Q1
LP38691SD-5.0/NOPB	WSON	NGG	6	1000	180.0	12.4	3.3	3.3	1.0	8.0	12.0	Q1
LP38691SD-5.0/NOPB	WSON	NGG	6	1000	177.8	12.4	3.3	3.3	1.0	8.0	12.0	Q1
LP38691SDX-1.8/NOPB	WSON	NGG	6	4500	330.0	12.4	3.3	3.3	1.0	8.0	12.0	Q1
LP38691SDX-3.3/NOPB	WSON	NGG	6	4500	330.0	12.4	3.3	3.3	1.0	8.0	12.0	Q1
LP38691SDX-5.0/NOPB	WSON	NGG	6	4500	330.0	12.4	3.3	3.3	1.0	8.0	12.0	Q1
LP38691SDX-5.0/NOPB	WSON	NGG	6	4500	330.0	12.4	3.3	3.3	1.0	8.0	12.0	Q1
LP38693MP-1.8/NOPB	SOT-223	NDC	5	1000	330.0	16.4	7.0	7.5	2.2	12.0	16.0	Q3
LP38693MP-2.5/NOPB	SOT-223	NDC	5	1000	330.0	16.4	7.0	7.5	2.2	12.0	16.0	Q3
LP38693MP-3.3/NOPB	SOT-223	NDC	5	1000	330.0	16.4	7.0	7.5	2.2	12.0	16.0	Q3
LP38693MP-5.0/NOPB	SOT-223	NDC	5	1000	330.0	16.4	7.0	7.5	2.2	12.0	16.0	Q3
LP38693MPX-1.8/NOPB	SOT-223	NDC	5	2000	330.0	16.4	7.0	7.5	2.2	12.0	16.0	Q3
LP38693MPX-2.5/NOPB	SOT-223	NDC	5	2000	330.0	16.4	7.0	7.5	2.2	12.0	16.0	Q3
LP38693MPX-3.3/NOPB	SOT-223	NDC	5	2000	330.0	16.4	7.0	7.5	2.2	12.0	16.0	Q3
LP38693MPX-5.0/NOPB	SOT-223	NDC	5	2000	330.0	16.4	7.0	7.5	2.2	12.0	16.0	Q3
LP38693QSD-1.8/NOPB	WSON	NGG	6	1000	177.8	12.4	3.3	3.3	1.0	8.0	12.0	Q1
LP38693QSD-2.5/NOPB	WSON	NGG	6	1000	177.8	12.4	3.3	3.3	1.0	8.0	12.0	Q1
LP38693QSD-3.3/NOPB	WSON	NGG	6	1000	177.8	12.4	3.3	3.3	1.0	8.0	12.0	Q1
LP38693QSD-5.0/NOPB	WSON	NGG	6	1000	177.8	12.4	3.3	3.3	1.0	8.0	12.0	Q1
LP38693QSDX-1.8/NOPB	WSON	NGG	6	4500	330.0	12.4	3.3	3.3	1.0	8.0	12.0	Q1
LP38693QSDX-2.5/NOPB	WSON	NGG	6	4500	330.0	12.4	3.3	3.3	1.0	8.0	12.0	Q1
LP38693QSDX-3.3/NOPB	WSON	NGG	6	4500	330.0	12.4	3.3	3.3	1.0	8.0	12.0	Q1
LP38693QSDX-5.0/NOPB	WSON	NGG	6	4500	330.0	12.4	3.3	3.3	1.0	8.0	12.0	Q1
LP38693SD-1.8/NOPB	WSON	NGG	6	1000	180.0	12.4	3.3	3.3	1.0	8.0	12.0	Q1
LP38693SD-1.8/NOPB	WSON	NGG	6	1000	177.8	12.4	3.3	3.3	1.0	8.0	12.0	Q1
LP38693SD-2.5/NOPB	WSON	NGG	6	1000	177.8	12.4	3.3	3.3	1.0	8.0	12.0	Q1
LP38693SD-3.3/NOPB	WSON	NGG	6	1000	180.0	12.4	3.3	3.3	1.0	8.0	12.0	Q1
LP38693SD-3.3/NOPB	WSON	NGG	6	1000	177.8	12.4	3.3	3.3	1.0	8.0	12.0	Q1
LP38693SD-5.0/NOPB	WSON	NGG	6	1000	180.0	12.4	3.3	3.3	1.0	8.0	12.0	Q1
LP38693SD-5.0/NOPB	WSON	NGG	6	1000	177.8	12.4	3.3	3.3	1.0	8.0	12.0	Q1
LP38693SDX-3.3/NOPB	WSON	NGG	6	4500	330.0	12.4	3.3	3.3	1.0	8.0	12.0	Q1
LP38693SDX-3.3/NOPB	WSON	NGG	6	4500	330.0	12.4	3.3	3.3	1.0	8.0	12.0	Q1
LP38693SDX-5.0/NOPB	WSON	NGG	6	4500	330.0	12.4	3.3	3.3	1.0	8.0	12.0	Q1

TAPE AND REEL BOX DIMENSIONS

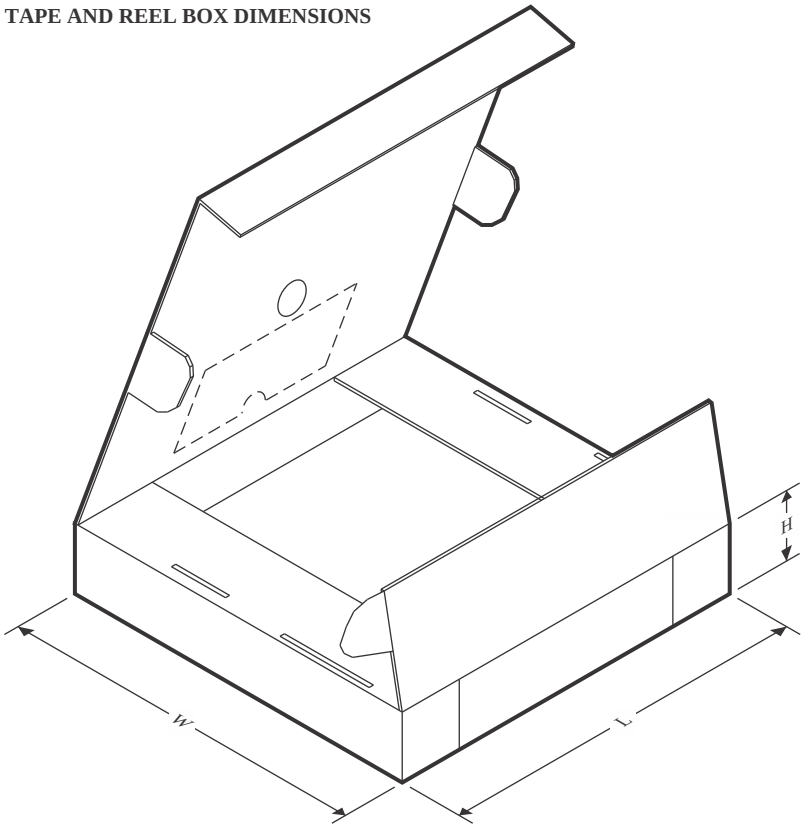

*All dimensions are nominal

Device	Package Type	Package Drawing	Pins	SPQ	Length (mm)	Width (mm)	Height (mm)
LP38691DTX-1.8/NOPB	TO-252	NDP	3	2500	356.0	356.0	36.0
LP38691DTX-2.5/NOPB	TO-252	NDP	3	2500	356.0	356.0	36.0
LP38691DTX-3.3/NOPB	TO-252	NDP	3	2500	356.0	356.0	36.0
LP38691DTX-5.0/NOPB	TO-252	NDP	3	2500	356.0	356.0	36.0
LP38691QSD-1.8/NOPB	WSON	NGG	6	1000	208.0	191.0	35.0
LP38691QSD-2.5/NOPB	WSON	NGG	6	1000	208.0	191.0	35.0
LP38691QSD-3.3/NOPB	WSON	NGG	6	1000	208.0	191.0	35.0
LP38691QSD-5.0/NOPB	WSON	NGG	6	1000	208.0	191.0	35.0
LP38691QSDX-1.8/NOPB	WSON	NGG	6	4500	367.0	367.0	35.0
LP38691QSDX-2.5/NOPB	WSON	NGG	6	4500	367.0	367.0	35.0
LP38691QSDX-3.3/NOPB	WSON	NGG	6	4500	367.0	367.0	35.0
LP38691QSDX-5.0/NOPB	WSON	NGG	6	4500	367.0	367.0	35.0
LP38691SD-1.8/NOPB	WSON	NGG	6	1000	200.0	183.0	25.0
LP38691SD-1.8/NOPB	WSON	NGG	6	1000	208.0	191.0	35.0
LP38691SD-2.5/NOPB	WSON	NGG	6	1000	200.0	183.0	25.0
LP38691SD-2.5/NOPB	WSON	NGG	6	1000	208.0	191.0	35.0
LP38691SD-3.3/NOPB	WSON	NGG	6	1000	208.0	191.0	35.0
LP38691SD-3.3/NOPB	WSON	NGG	6	1000	200.0	183.0	25.0

Device	Package Type	Package Drawing	Pins	SPQ	Length (mm)	Width (mm)	Height (mm)
LP38691SD-5.0/NOPB	WSON	NGG	6	1000	200.0	183.0	25.0
LP38691SD-5.0/NOPB	WSON	NGG	6	1000	208.0	191.0	35.0
LP38691SDX-1.8/NOPB	WSON	NGG	6	4500	367.0	367.0	35.0
LP38691SDX-3.3/NOPB	WSON	NGG	6	4500	367.0	367.0	35.0
LP38691SDX-5.0/NOPB	WSON	NGG	6	4500	367.0	367.0	35.0
LP38691SDX-5.0/NOPB	WSON	NGG	6	4500	346.0	346.0	35.0
LP38693MP-1.8/NOPB	SOT-223	NDC	5	1000	367.0	367.0	35.0
LP38693MP-2.5/NOPB	SOT-223	NDC	5	1000	367.0	367.0	35.0
LP38693MP-3.3/NOPB	SOT-223	NDC	5	1000	367.0	367.0	35.0
LP38693MP-5.0/NOPB	SOT-223	NDC	5	1000	367.0	367.0	35.0
LP38693MPX-1.8/NOPB	SOT-223	NDC	5	2000	367.0	367.0	35.0
LP38693MPX-2.5/NOPB	SOT-223	NDC	5	2000	367.0	367.0	35.0
LP38693MPX-3.3/NOPB	SOT-223	NDC	5	2000	367.0	367.0	35.0
LP38693MPX-5.0/NOPB	SOT-223	NDC	5	2000	367.0	367.0	35.0
LP38693QSD-1.8/NOPB	WSON	NGG	6	1000	208.0	191.0	35.0
LP38693QSD-2.5/NOPB	WSON	NGG	6	1000	208.0	191.0	35.0
LP38693QSD-3.3/NOPB	WSON	NGG	6	1000	208.0	191.0	35.0
LP38693QSD-5.0/NOPB	WSON	NGG	6	1000	208.0	191.0	35.0
LP38693QSDX-1.8/NOPB	WSON	NGG	6	4500	367.0	367.0	35.0
LP38693QSDX-2.5/NOPB	WSON	NGG	6	4500	367.0	367.0	35.0
LP38693QSDX-3.3/NOPB	WSON	NGG	6	4500	367.0	367.0	35.0
LP38693QSDX-5.0/NOPB	WSON	NGG	6	4500	367.0	367.0	35.0
LP38693SD-1.8/NOPB	WSON	NGG	6	1000	200.0	183.0	25.0
LP38693SD-1.8/NOPB	WSON	NGG	6	1000	208.0	191.0	35.0
LP38693SD-2.5/NOPB	WSON	NGG	6	1000	208.0	191.0	35.0
LP38693SD-3.3/NOPB	WSON	NGG	6	1000	200.0	183.0	25.0
LP38693SD-3.3/NOPB	WSON	NGG	6	1000	208.0	191.0	35.0
LP38693SD-5.0/NOPB	WSON	NGG	6	1000	200.0	183.0	25.0
LP38693SD-5.0/NOPB	WSON	NGG	6	1000	208.0	191.0	35.0
LP38693SDX-3.3/NOPB	WSON	NGG	6	4500	346.0	346.0	35.0
LP38693SDX-3.3/NOPB	WSON	NGG	6	4500	367.0	367.0	35.0
LP38693SDX-5.0/NOPB	WSON	NGG	6	4500	367.0	367.0	35.0

TUBE

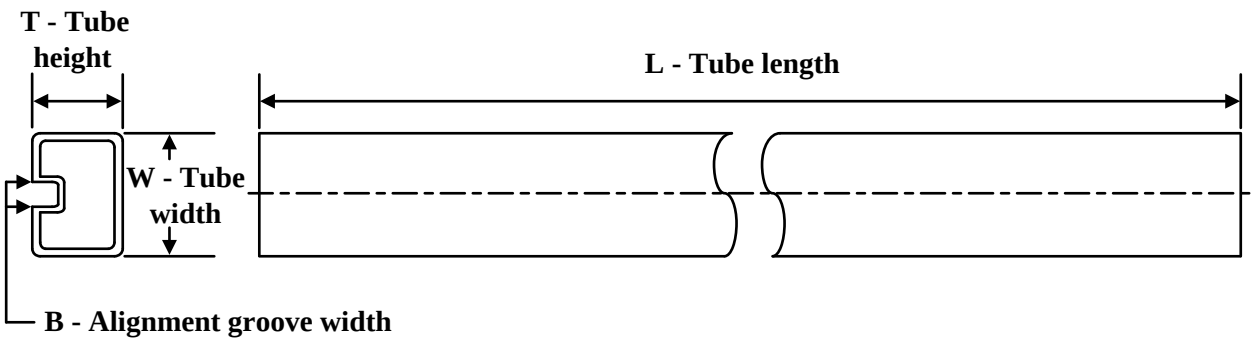

*All dimensions are nominal

Device	Package Name	Package Type	Pins	SPQ	L (mm)	W (mm)	T (µm)	B (mm)
LP38691DT-1.8/NOPB	NDP	TO-252	3	75	508	20	4165.6	3.1
LP38691DT-1.8/NOPB.A	NDP	TO-252	3	75	508	20	4165.6	3.1
LP38691DT-1.8/NOPB.B	NDP	TO-252	3	75	508	20	4165.6	3.1
LP38691DT-2.5/NOPB	NDP	TO-252	3	75	508	20	4165.6	3.1
LP38691DT-2.5/NOPB.A	NDP	TO-252	3	75	508	20	4165.6	3.1
LP38691DT-2.5/NOPB.B	NDP	TO-252	3	75	508	20	4165.6	3.1
LP38691DT-3.3/NOPB	NDP	TO-252	3	75	508	20	4165.6	3.1
LP38691DT-3.3/NOPB.A	NDP	TO-252	3	75	508	20	4165.6	3.1
LP38691DT-3.3/NOPB.B	NDP	TO-252	3	75	508	20	4165.6	3.1
LP38691DT-5.0/NOPB	NDP	TO-252	3	75	508	20	4165.6	3.1
LP38691DT-5.0/NOPB.A	NDP	TO-252	3	75	508	20	4165.6	3.1
LP38691DT-5.0/NOPB.B	NDP	TO-252	3	75	508	20	4165.6	3.1

NDC0005A

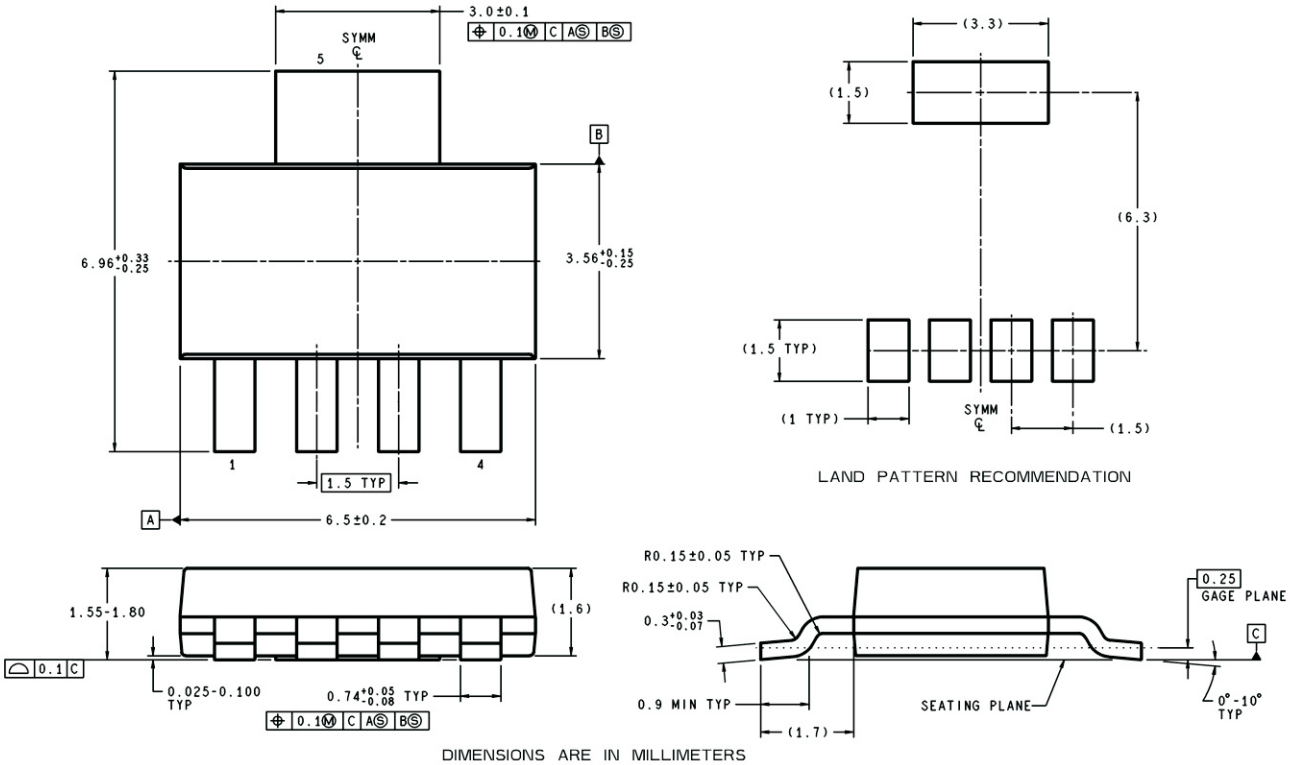
3.0±0.1
0.1 M C A S B S
SYMM
5
B
6.96 +0.33 -0.25
3.56 +0.15 -0.25
1
4
1.5 TYP
A
6.5±0.2
(3.3)
(1.5)
(6.3)
(1.5 TYP)
(1 TYP)
SYMM
(1.5)
LAND PATTERN RECOMMENDATION
1.55-1.80
(1.6)
0.1 C
0.025-0.100 TYP
0.74 +0.05 -0.08 TYP
0.1 M C A S B S
R0.15±0.05 TYP
R0.15±0.05 TYP
0.3 +0.03 -0.07
0.9 MIN TYP
(1.7)
SEATING PLANE
0.25
GAGE PLANE
C
0°-10° TYP
DIMENSIONS ARE IN MILLIMETERS
MP05A (Rev A)

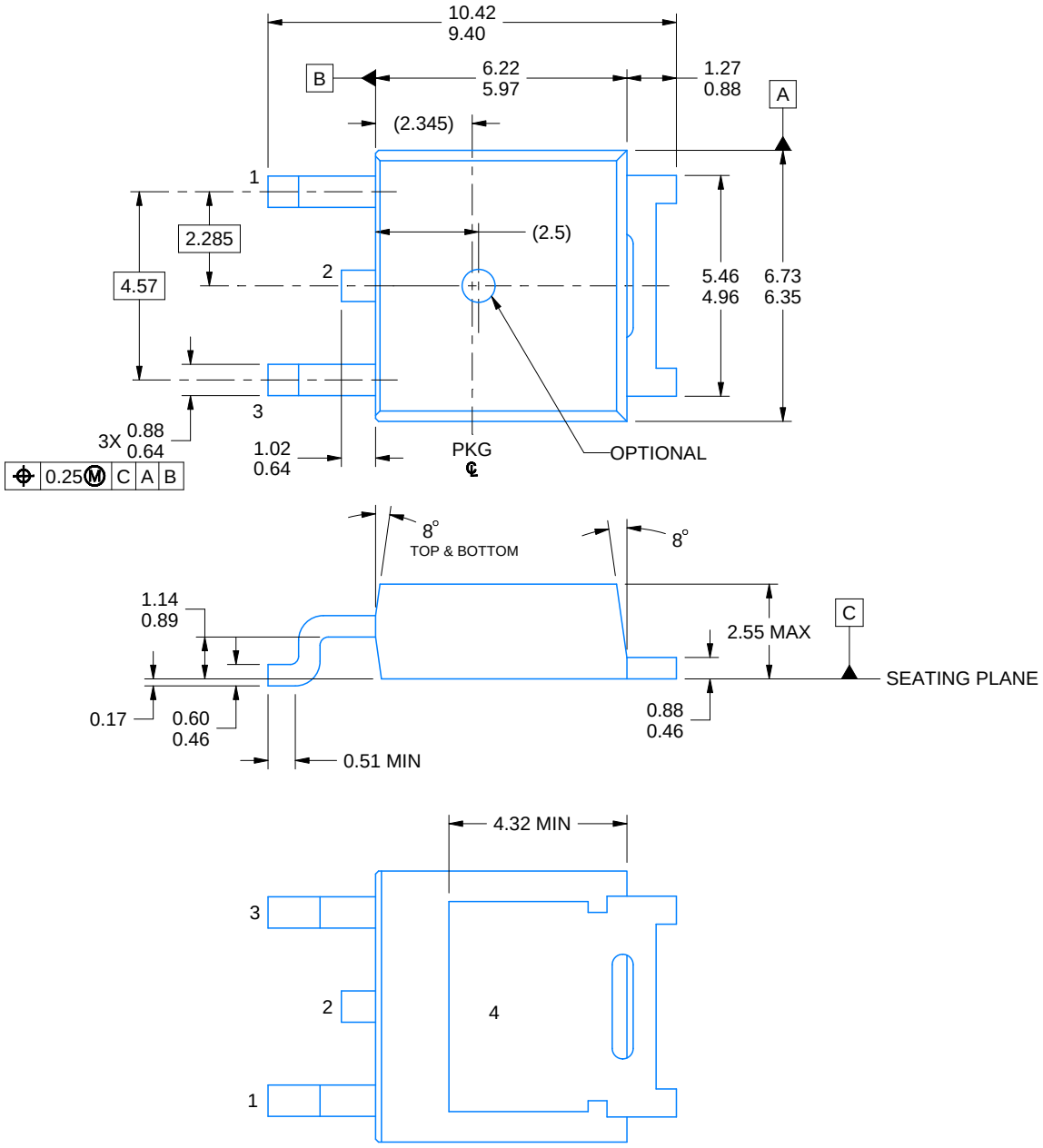

4219870/A 03/2018

NOTES:

1. All linear dimensions are in millimeters. Any dimensions in parenthesis are for reference only. Dimensioning and tolerancing per ASME Y14.5M.
2. This drawing is subject to change without notice.
3. Reference JEDEC registration TO-252.

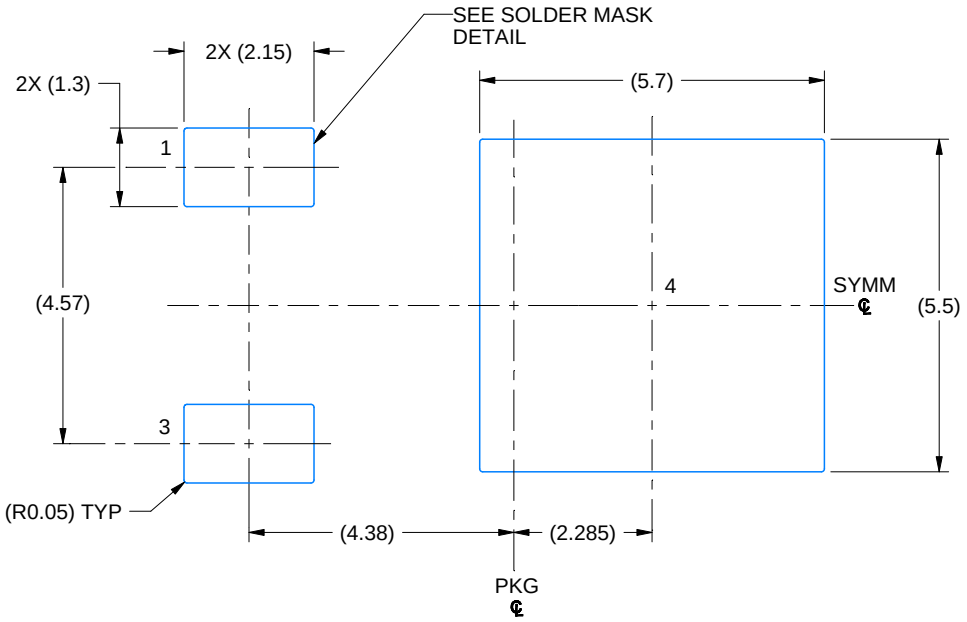

LAND PATTERN EXAMPLE
EXPOSED METAL SHOWN
SCALE: 8X

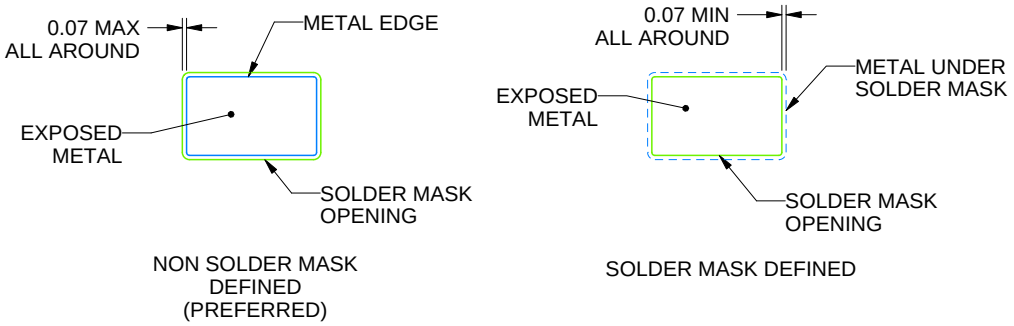

SOLDER MASK DETAIL

4219870/A 03/2018

NOTES: (continued)

4. This package is designed to be soldered to a thermal pad on the board. For more information, see Texas Instruments literature numbers SLMA002(www.ti.com/lit/slm002) and SLMA004 (www.ti.com/lit/slma004).
5. Vias are optional depending on application, refer to device data sheet. It is recommended that vias under paste be filled, plugged or tented.

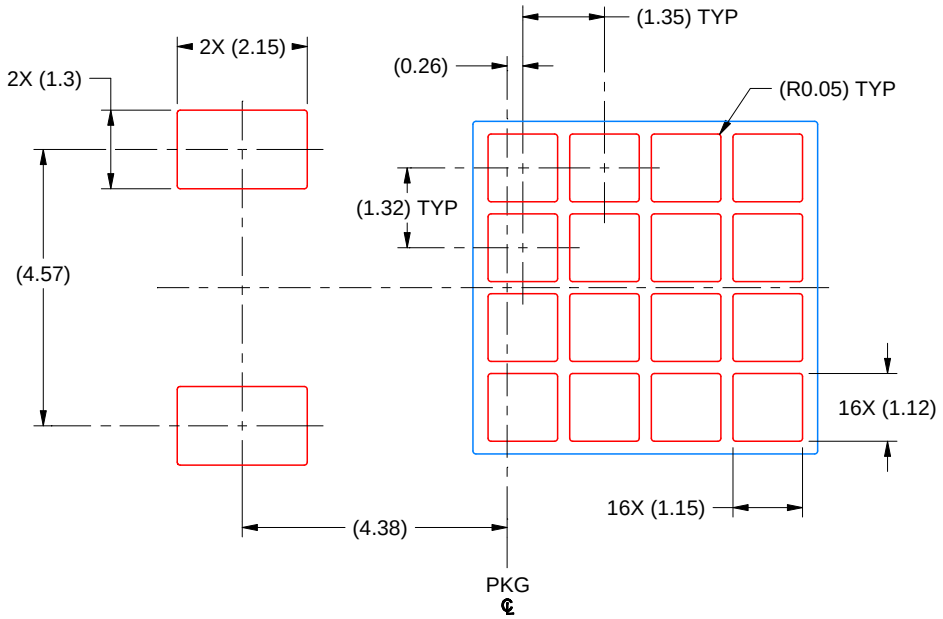

SOLDER PASTE EXAMPLE
BASED ON 0.125 MM THICK STENCIL
SCALE: 8X

4219870/A 03/2018

NOTES: (continued)

6. Laser cutting apertures with trapezoidal walls and rounded corners may offer better paste release. IPC-7525 may have alternate design recommendations.
7. Board assembly site may have different recommendations for stencil design.

NGG0006A

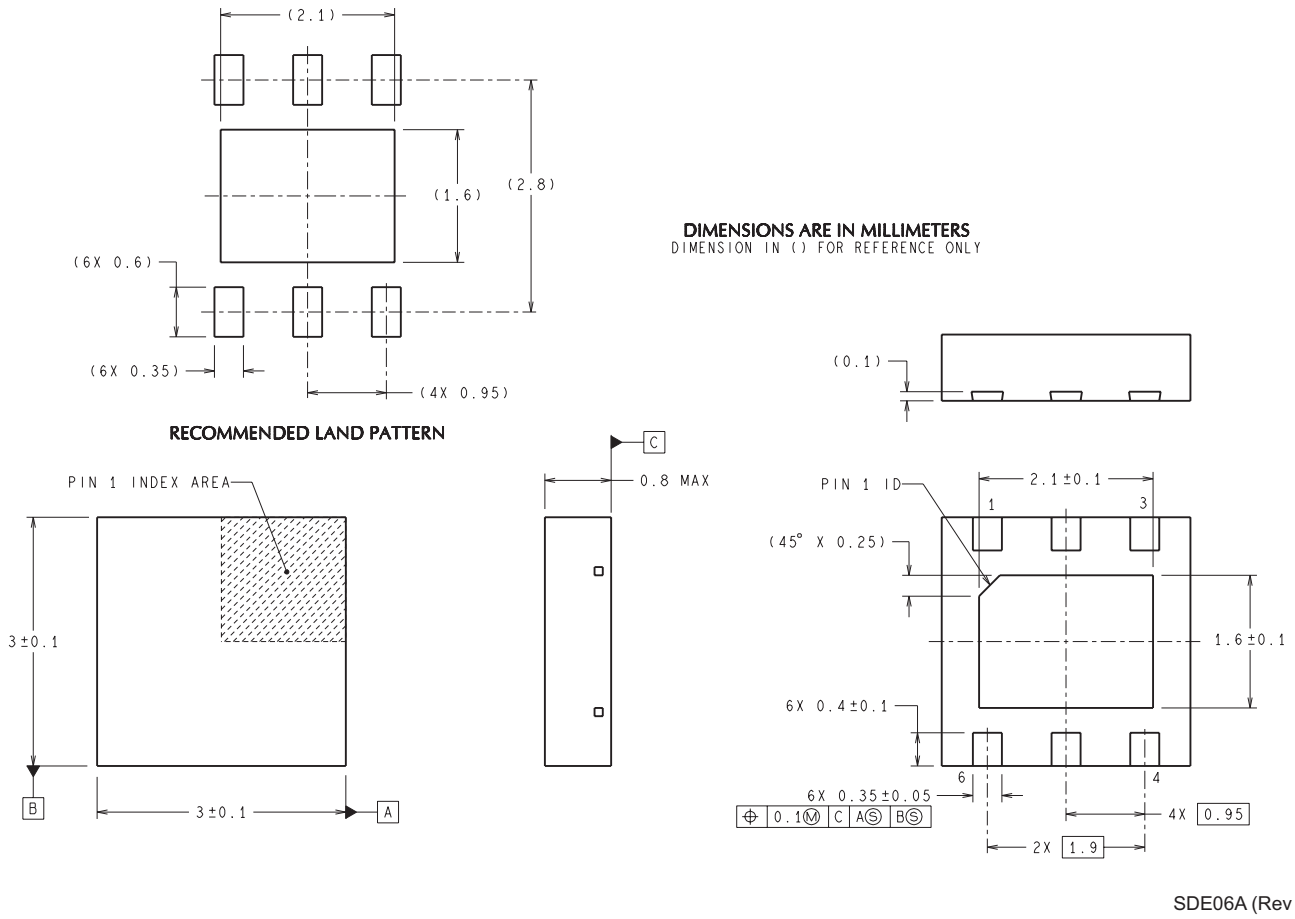
(2.1)
(1.6)
(2.8)
(6X 0.6)
(6X 0.35)
(4X 0.95)
RECOMMENDED LAND PATTERN
DIMENSIONS ARE IN MILLIMETERS
DIMENSION IN () FOR REFERENCE ONLY
(0.1)
PIN 1 INDEX AREA
C
0.8 MAX
3±0.1
B
3±0.1
A
PIN 1 ID
2.1±0.1
1
3
(45° X 0.25)
1.6±0.1
6X 0.4±0.1
6
4
6X 0.35±0.05
0.1 M C A S B S
4X 0.95
2X 1.9
SDE06A (Rev A)

IMPORTANT NOTICE AND DISCLAIMER

TI PROVIDES TECHNICAL AND RELIABILITY DATA (INCLUDING DATASHEETS), DESIGN RESOURCES (INCLUDING REFERENCE DESIGNS), APPLICATION OR OTHER DESIGN ADVICE, WEB TOOLS, SAFETY INFORMATION, AND OTHER RESOURCES “AS IS” AND WITH ALL FAULTS, AND DISCLAIMS ALL WARRANTIES, EXPRESS AND IMPLIED, INCLUDING WITHOUT LIMITATION ANY IMPLIED WARRANTIES OF MERCHANTABILITY, FITNESS FOR A PARTICULAR PURPOSE OR NON-INFRINGEMENT OF THIRD PARTY INTELLECTUAL PROPERTY RIGHTS.

These resources are intended for skilled developers designing with TI products. You are solely responsible for (1) selecting the appropriate TI products for your application, (2) designing, validating and testing your application, and (3) ensuring your application meets applicable standards, and any other safety, security, regulatory or other requirements.

These resources are subject to change without notice. TI grants you permission to use these resources only for development of an application that uses the TI products described in the resource. Other reproduction and display of these resources is prohibited. No license is granted to any other TI intellectual property right or to any third party intellectual property right. TI disclaims responsibility for, and you fully indemnify TI and its representatives against any claims, damages, costs, losses, and liabilities arising out of your use of these resources.

TI’s products are provided subject to TI’s Terms of Sale, TI’s General Quality Guidelines, or other applicable terms available either on ti.com or provided in conjunction with such TI products. TI’s provision of these resources does not expand or otherwise alter TI’s applicable warranties or warranty disclaimers for TI products. Unless TI explicitly designates a product as custom or customer-specified, TI products are standard, catalog, general purpose devices.

TI objects to and rejects any additional or different terms you may propose.

Copyright © 2026, Texas Instruments Incorporated

Last updated 10/2025