LMK1D210x Low Additive Jitter LVDS Buffer

1 Features

- High-performance LVDS clock buffer family: up to 2 GHz
  - Dual 1:6 differential buffer
  - Dual 1:8 differential buffer
- Supply voltage: 1.71 V to 3.465 V
- Low additive jitter: < 60 fs RMS maximum in 12-kHz to 20-MHz at 156.25 MHz
  - Very low phase noise floor: -164 dBc/Hz (typical)
- Very low propagation delay: < 575 ps maximum
- Output skew: 20 ps maximum
- High-swing LVDS (boosted mode): 500-mV VOD typical when AMP_SEL = 1
- Bank enable/disable using the EN pin
- Fail-safe input operation
- Universal inputs accept LVDS, LVPECL, LVCMOS, HCSL and CML signal levels
- LVDS reference voltage, V_{AC_REF}, available for capacitive-coupled inputs
- Industrial temperature range: –40°C to 105°C
- Packaged in
  - LMK1D2106: 6-mm × 6-mm, 40-pin VQFN (RHA)
  - LMK1D2108: 7-mm × 7-mm, 48-pin VQFN (RGZ)

2 Applications

- Telecommunications and networking
- Medical imaging
- Test and measurement
- Wireless infrastructure
- Pro audio, video and signage

3 Description

The LMK1D210x clock buffer distributes two clock inputs (IN0 and IN1) to a total of 16 pairs of differential LVDS clock outputs (OUT0 to OUT15) in the LMK1D2108 and 12 pairs of clock outputs (OUT0 to OUT11) in the LMK1D2106 with minimum skew for clock distribution. Each buffer block consists of one input and a maximum of 6 (LMK1D2106) or 8 (LMK1D2108) LVDS outputs. The inputs can either be LVDS, LVPECL, HCSL, CML, or LVCMOS.

The LMK1D210x is specifically designed for driving 50-Ω transmission lines. When driving inputs in single-ended mode, apply the appropriate bias voltage to the unused negative input pin (see Figure 8-6).

Using the control pin (EN), output banks can either be enable or disabled. If this pin is left open, both bank outputs are enabled. If the control pin is switched to a logic "0", both bank outputs are disabled (static logic "0"). If the control pin is switched to a logic "1", the outputs of one bank are disabled while the outputs of the other bank are enabled. The part also supports a fail-safe function. The device further incorporates an input hysteresis which prevents random oscillation of the outputs in the absence of an input signal.

The device operates in a 1.8-V, 2.5-V, or 3.3-V supply environment and is characterized from –40°C to 105°C (ambient temperature).

Device Information

PART NUMBER(1)	PACKAGE	BODY SIZE (NOM)
LMK1D2106	VQFN (40)	6.00 mm × 6.00 mm
LMK1D2108	VQFN (48)	7.00 mm × 7.00 mm

(1) For all available packages, see the orderable addendum at the end of the data sheet.

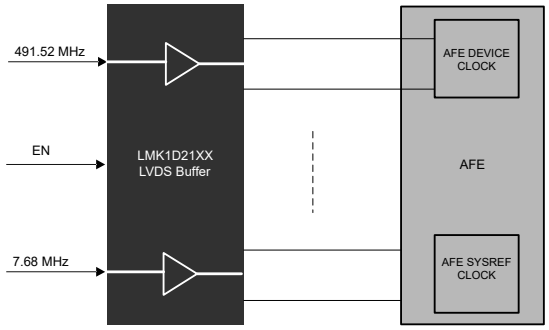

Application Example

An IMPORTANT NOTICE at the end of this data sheet addresses availability, warranty, changes, use in safety-critical applications, intellectual property matters and other important disclaimers. PRODUCTION DATA.

Table of Contents

1 Features....1
2 Applications....1
3 Description....1
4 Revision History....2
5 Pin Configuration and Functions....3
6 Specifications....4
6.1 Absolute Maximum Ratings....4
6.2 ESD Ratings....4
6.3 Recommended Operating Conditions....5
6.4 Thermal Information....5
6.5 Electrical Characteristics....5
6.6 Typical Characteristics....9
7 Parameter Measurement Information....12
8 Detailed Description....14
8.1 Overview....14
8.2 Functional Block Diagram....14
8.3 Feature Description....15
8.4 Device Functional Modes....15
9 Application and Implementation....18
9.1 Application Information....18
9.2 Typical Application....18
10 Power Supply Recommendations....22
11 Layout....23
11.1 Layout Guidelines....23
11.2 Layout Examples....23
12 Device and Documentation Support....24
12.1 Documentation Support....24
12.2 Receiving Notification of Documentation Updates....24
12.3 Support Resources....24
12.4 Trademarks....24
12.5 Electrostatic Discharge Caution....24
12.6 Glossary....24
13 Mechanical, Packaging, and Orderable Information....24

4 Revision History

NOTE: Page numbers for previous revisions may differ from page numbers in the current version.

Changes from Revision * (October 2021) to Revision A (January 2022)	Page
• Added Fail-safe input operation to the *Features*	1
• Added *Fail-Safe Input* section	15

Copyright © 2022 Texas Instruments Incorporated

5 Pin Configuration and Functions

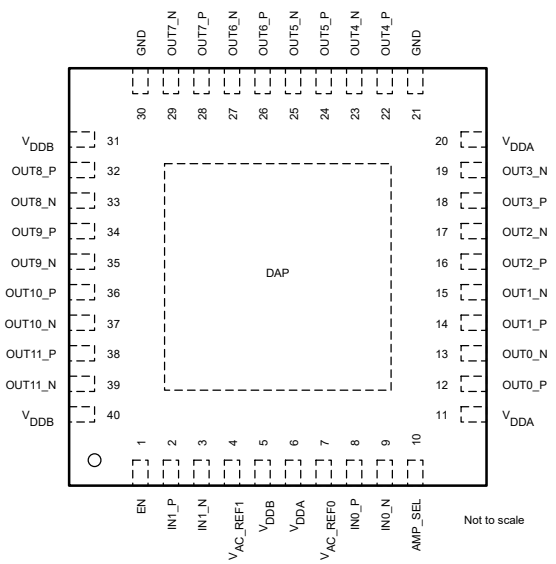

Figure 5-1. LMK1D2106: RHA Package 40-Pin VQFN Top View

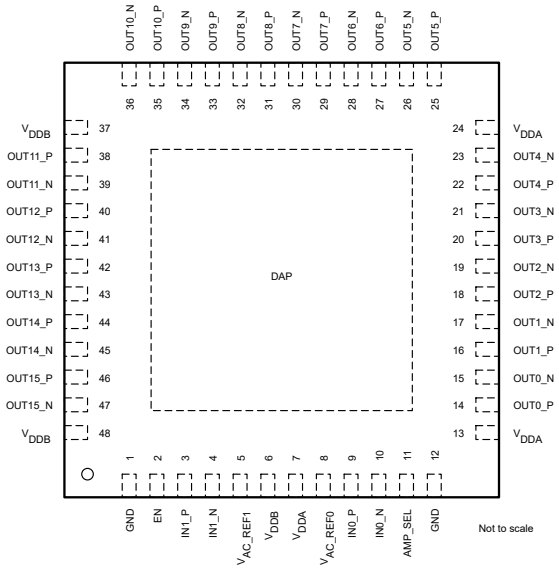

Figure 5-2. LMK1D2108: RGZ Package 48-Pin VQFN Top View

Table 5-1. Pin Functions

PIN			TYPE[(1)]	DESCRIPTION
NAME	LMK1D2106	LMK1D2108		
DIFFERENTIAL/SINGLE-ENDED CLOCK INPUT				
IN0_P, IN0_N	8, 9	9, 10	I	Primary: Differential input pair or single-ended input
IN1_P, IN1_N	2, 3	3, 4	I	Secondary: Differential input pair or single-ended input Note that INP0, INN0 are used indistinguishably with IN0_P, IN0_N.
BANK ENABLE				
EN	1	2	I	Output bank enable/disable with an internal 500-kΩ pullup and 320-kΩ pulldown. See Table 8-2.
AMPLITUDE SELECT				
AMP_SEL	10	11	I	Output amplitude swing select with an internal 500-kΩ pullup and 320-kΩ pulldown. See Table 8-3.
BIAS VOLTAGE OUTPUT				
V_{AC_REF0},V_{AC_REF1}	7, 4	8, 5	O	Bias voltage output for capacitive coupled inputs. If used, TI recommends using a 0.1-µF capacitor to GND on this pin.
DIFFERENTIAL CLOCK OUTPUT				
OUT0_P, OUT0_N	12, 13	14, 15	O	Differential LVDS output pair number 0
OUT1_P, OUT1_N	14, 15	16, 17	O	Differential LVDS output pair number 1
OUT2_P, OUT2_N	16, 17	18, 19	O	Differential LVDS output pair number 2
OUT3_P, OUT3_N	18, 19	20, 21	O	Differential LVDS output pair number 3
OUT4_P, OUT4_N	22, 23	22, 23	O	Differential LVDS output pair number 4
OUT5_P, OUT5_N	24, 25	25, 26	O	Differential LVDS output pair number 5
OUT6_P, OUT6_N	26, 27	27, 28	O	Differential LVDS output pair number 6
OUT7_P, OUT7_N	28, 29	29, 30	O	Differential LVDS output pair number 7
OUT8_P, OUT8_N	32, 33	31, 32	O	Differential LVDS output pair number 8

Copyright © 2022 Texas Instruments Incorporated

Table 5-1. Pin Functions (continued)

PIN			TYPE[1]	DESCRIPTION
NAME	LMK1D2106	LMK1D2108		
OUT9_P, OUT9_N	34, 35	33, 34	O	Differential LVDS output pair number 9
OUT10_P, OUT10_N	36, 37	35, 36	O	Differential LVDS output pair number 10
OUT11_P, OUT11_N	38, 39	38, 39	O	Differential LVDS output pair number 11
OUT12_P, OUT12_N	—	40, 41	O	Differential LVDS output pair number 12
OUT13_P, OUT13_N	—	42, 43	O	Differential LVDS output pair number 13
OUT14_P, OUT14_N	—	44, 45	O	Differential LVDS output pair number 14
OUT15_P, OUT15_N	—	46, 47	O	Differential LVDS output pair number 15
SUPPLY VOLTAGE				
V_{DDA}	6, 11, 20	7, 13, 24	P	Device power supply (1.8 V, 2.5 V, or 3.3 V) for Bank 0
V_{DDB}	5, 31, 40	6, 37, 48	P	Device power supply (1.8 V, 2.5 V, or 3.3 V) for Bank 1
GROUND				
GND	21, 30	1, 12	G	Ground
MISC				
DAP	DAP	DAP	G	Die Attach Pad. Connect to the printed circuit board (PCB) ground plane for heat dissipation.

(1) G = Ground, I = Input, O = Output, P = Power

6 Specifications

6.1 Absolute Maximum Ratings

over operating free-air temperature range (unless otherwise noted)[1]

		MIN	MAX	UNIT
V_{DD}	Supply voltage	–0.3	3.6	V
V_{IN}	Input voltage	–0.3	3.6	V
V_O	Output voltage	–0.3	V_{DD} + 0.3	V
I_{IN}	Input current	–20	20	mA
I_O	Continuous output current	–50	50	mA
T_J	Junction temperature		135	°C
T_{stg}	Storage temperature [2]	–65	150	°C

(1) Stresses beyond those listed under *Absolute Maximum Rating* may cause permanent damage to the device. These are stress ratings only, which do not imply functional operation of the device at these or any other conditions beyond those indicated under *Recommended Operating Condition*. Exposure to absolute-maximum-rated conditions for extended periods may affect device reliability.
(2) Device unpowered

6.2 ESD Ratings

			VALUE	UNIT
$V_{(ESD)}$	Electrostatic discharge	Human body model (HBM), per ANSI/ESDA/JEDEC JS-001, all pins[1]	±3000	V
		Charged device model (CDM), per ANSI/ESDA/JEDEC JS-002, all pins[2]	±1000	

(1) JEDEC document JEP155 states that 500-V HBM allows safe manufacturing with a standard ESD control process.
(2) JEDEC document JEP157 states that 250-V CDM allows safe manufacturing with a standard ESD control process.

Copyright © 2022 Texas Instruments Incorporated

6.3 Recommended Operating Conditions

over operating free-air temperature range (unless otherwise noted)

			MIN	NOM	MAX	UNIT
V_{DD}	Core supply voltage	3.3-V supply	3.135	3.3	3.465	V
		2.5-V supply	2.375	2.5	2.625	
		1.8-V supply	1.71	1.8	1.89	
Supply Ramp	Supply voltage ramp	Requires monotonic ramp (10-90 % of VDD)	0.1		20	ms
T_A	Operating free-air temperature		–40		105	°C
T_J	Operating junction temperature		–40		135	°C

6.4 Thermal Information

THERMAL METRIC[1]		LMK1D2106 RHA (VQFN) 40 PINS	LMK1D2108 RGZ (VQFN) 48 PINS	UNIT
$R_{\theta JA}$	Junction-to-ambient thermal resistance	30.3	30.5	°C/W
$R_{\theta JC(top)}$	Junction-to-case (top) thermal resistance	21.6	21.2	°C/W
$R_{\theta JB}$	Junction-to-board thermal resistance	13.1	12.9	°C/W
Ψ_{JT}	Junction-to-top characterization parameter	0.4	0.4	°C/W
Ψ_{JB}	Junction-to-board characterization parameter	13	12.8	°C/W
$R_{\theta JC(bot)}$	Junction-to-case (bottom) thermal resistance	4.5	4.5	°C/W

(1) For more information about traditional and new thermal metrics, see the Semiconductor and IC Package Thermal Metrics application report.

6.5 Electrical Characteristics

VDD = 1.8 V ± 5 %, –40°C ≤T_A ≤ 105°C. Typical values are at VDD = 1.8 V, 25°C (unless otherwise noted)

PARAMETER		TEST CONDITIONS	MIN	TYP	MAX	UNIT
POWER SUPPLY CHARACTERISTICS						
IDD_{STAT}	Core supply current, static (LMK1D2106)	All outputs enabled and unterminated, f = 0 Hz, AMP_SEL = Open (default)		75		mA
IDD_{STAT}	Core supply current, static (LMK1D2108)	All outputs enabled and unterminated, f = 0 Hz, AMP_SEL = Open (default)		80		mA
IDD_{100M}	Core supply current (LMK1D2106)	All outputs enabled, RL = 100 Ω, f =100 MHz, AMP_SEL = Open (default)		113	140	mA
IDD_{100M}	Core supply current (LMK1D2108)	All outputs enabled, RL = 100 Ω, f =100 MHz, AMP_SEL = Open (default)		134	160	mA
IDD_{STAT}	Core supply current, static (LMK1D2106)	All outputs enabled and unterminated, f = 0 Hz, AMP_SEL = 1		75		mA
IDD_{STAT}	Core supply current, static (LMK1D2108)	All outputs enabled and unterminated, f = 0 Hz, AMP_SEL = 1		80		mA
IDD_{100M}	Core supply current (LMK1D2106)	All outputs enabled, RL = 100 Ω, f =100 MHz, AMP_SEL = 1		130	165	mA
IDD_{100M}	Core supply current (LMK1D2108)	All outputs enabled, RL = 100 Ω, f =100 MHz, AMP_SEL = 1			185	mA
EN/AMP_SEL CONTROL INPUT CHARACTERISTICS (Applies to V_{DD} = 1.8 V ± 5%, 2.5 V ± 5% and 3.3 V ± 5%)						
Vd_{I3}	Tri-state input	Open		0.4 × V_{CC}		V

VDD = 1.8 V ± 5 %, –40°C ≤T_A ≤ 105°C. Typical values are at VDD = 1.8 V, 25°C (unless otherwise noted)

PARAMETER		TEST CONDITIONS	MIN	TYP	MAX	UNIT
V_{IH}	Input high voltage	Minimum input voltage for a logical "1" state in table 1	0.7 × V_{CC}		V_{CC} + 0.3	V
V_{IL}	Input low voltage	Maximum input voltage for a logical "0" state in table 1	–0.3		0.3 × V_{CC}	V
I_{IH}	Input high current	V_{DD} can be 1.8V, 2.5V, or 3.3V with V_{IH} = V_{DD}			30	µA
I_{IL}	Input low current	V_{DD} can be 1.8V, 2.5V, or 3.3V with V_{IH} = V_{DD}	–30			µA
$R_{pull-up}$	Input pullup resistor			500		kΩ
$R_{pull-down}$	Input pulldown resistor			320		kΩ
SINGLE-ENDED LVCMOS/LVTTL CLOCK INPUT (Applies to V_{DD} = 1.8 V ± 5%, 2.5 V ± 5% and 3.3 V ± 5%)						
f_{IN}	Input frequency	Clock input	DC		250	MHz
V_{IN_S-E}	Single-ended Input Voltage Swing	Assumes a square wave input with two levels	0.4		3.465	V
dVIN/dt	Input Slew Rate (20% to 80% of the amplitude)		0.05			V/ns
I_{IH}	Input high current	V_{DD} = 3.465 V, V_{IH} = 3.465 V			60	µA
I_{IL}	Input low current	V_{DD} = 3.465 V, V_{IL} = 0 V	–30			µA
C_{IN_SE}	Input capacitance	at 25°C		3.5		pF
DIFFERENTIAL CLOCK INPUT (Applies to V_{DD} = 1.8 V ± 5%, 2.5 V ± 5% and 3.3 V ± 5%)						
f_{IN}	Input frequency	Clock input			2	GHz
$V_{IN,DIFF(p-p)}$	Differential input voltage peak-to-peak {2 × (V_{INP} – V_{INN})}	V_{ICM} = 1 V (V_{DD} = 1.8 V)	0.3		2.4	V_{PP}
		V_{ICM} = 1.25 V (V_{DD} = 2.5 V/3.3 V)	0.3		2.4	
V_{ICM}	Input common-mode voltage	$V_{IN,DIFF(P-P)}$ > 0.4 V (V_{DD} = 1.8 V/2.5 V/3.3 V)	0.25		2.3	V
I_{IH}	Input high current	V_{DD} = 3.465 V, V_{INP} = 2.4 V, V_{INN} = 1.2 V			30	µA
I_{IL}	Input low current	V_{DD} = 3.465 V, V_{INP} = 0 V, V_{INN} = 1.2 V	–30			µA
C_{IN_SE}	Input capacitance (Single-ended)	at 25°C		3.5		pF
LVDS DC OUTPUT CHARACTERISTICS						
|VOD|	Differential output voltage magnitude | V_{OUTP} - V_{OUTN}|	$V_{IN,DIFF(P-P)}$ = 0.3 V, R_{LOAD} = 100 Ω	250	350	450	mV
|VOD|	Differential output voltage magnitude | V_{OUTP} - V_{OUTN}|	$V_{IN,DIFF(P-P)}$ = 0.3 V, R_{LOAD} = 100 Ω, AMP_SEL = 1	400	500	650	mV
ΔVOD	Change in differential output voltage magnitude	$V_{IN,DIFF(P-P)}$ = 0.3 V, R_{LOAD} = 100 Ω	–15		15	mV
ΔVOD	Change in differential output voltage magnitude	$V_{IN,DIFF(P-P)}$ = 0.3 V, R_{LOAD} = 100 Ω, AMP_SEL = 1	–20		20	mV
$V_{OC(SS)}$	Steady-state, common-mode output voltage	$V_{IN,DIFF(P-P)}$ = 0.3 V, R_{LOAD} = 100 Ω (V_{DD} = 1.8 V)	1		1.2	V
		$V_{IN,DIFF(P-P)}$ = 0.3 V, R_{LOAD} = 100 Ω (V_{DD} = 2.5 V/3.3 V)	1.1		1.375	
$V_{OC(SS)}$	Steady-state, common-mode output voltage	$V_{IN,DIFF(P-P)}$ = 0.3 V, R_{LOAD} = 100 Ω ($_{VDD}$ = 1.8 V), AMP_SEL = 1	0.8		1.05	V
		$V_{IN,DIFF(P-P)}$ = 0.3 V, R_{LOAD} = 100 Ω ($_{VDD}$ = 2.5 V/3.3 V), AMP_SEL = 1	0.9		1.15	
$Δ_{VOC(SS)}$	Change in steady-state, common-mode output voltage	$V_{IN,DIFF(P-P)}$ = 0.3 V, R_{LOAD} = 100 Ω	–15		15	mV
$Δ_{VOC(SS)}$	Change in steady-state, common-mode output voltage	$V_{IN,DIFF(P-P)}$ = 0.3 V, R_{LOAD} = 100 Ω, AMP_SEL = 1	–20		20	mV

Copyright © 2022 Texas Instruments Incorporated

VDD = 1.8 V ± 5 %, –40°C ≤T_A ≤ 105°C. Typical values are at VDD = 1.8 V, 25°C (unless otherwise noted)

PARAMETER		TEST CONDITIONS	MIN	TYP	MAX	UNIT
LVDS AC OUTPUT CHARACTERISTICS						
V_{ring}	Output overshoot and undershoot	$V_{IN,DIFF(P-P)}$ = 0.3 V, R_{LOAD} = 100 Ω, f_{OUT} = 491.52 MHz	–0.1		0.1	V_{OD}
V_{OS}	Output AC common-mode voltage	$V_{IN,DIFF(P-P)}$ = 0.3 V, R_{LOAD} = 100 Ω		50	100	mV_{pp}
V_{OS}	Output AC common-mode voltage	$V_{IN,DIFF(P-P)}$ = 0.3 V, R_{LOAD} = 100 Ω, AMP_SEL = 1		75	150	mV_{pp}
I_{OS}	Short-circuit output current (differential)	V_{OUTP} = V_{OUTN}	–12		12	mA
$I_{OS(cm)}$	Short-circuit output current (common-mode)	V_{OUTP} = V_{OUTN} = 0	–24		24	mA
t_{PD}	Propagation delay	$V_{IN,DIFF(P-P)}$ = 0.3 V, R_{LOAD} = 100 Ω (1)	0.3		0.575	ns
$t_{SK, O}$	Output skew	Skew between outputs with the same load conditions (12 and 16 channels) (2)			20	ps
$t_{SK, b}$	Output bank skew	Skew between the outputs within the same bank (2106/2108) (3)			17.5	ps
$t_{SK, PP}$	Part-to-part skew	Skew between outputs on different parts subjected to the same operating conditions with the same input and output loading.			200	ps
$t_{SK, P}$	Pulse skew	50% duty cycle input, crossing point-to-crossing-point distortion (4)	–20		20	ps
$t_{RJIT(ADD)}$	Random additive Jitter (rms)	f_{IN} = 156.25 MHz with 50% duty-cycle, Input slew rate = 1.5V/ns, Integration range = 12 kHz to 20 MHz, with output load R_{LOAD} = 100 Ω		45	60	fs, RMS
Phase noise	Phase Noise for a carrier frequency of 156.25 MHz with 50% duty-cycle, Input slew rate = 1.5V/ns with output load R_{LOAD} = 100 Ω	PN_{1kHz}		–143		dBc/Hz
		PN_{10kHz}		–150		
		PN_{100kHz}		–157		
		PN_{1MHz}		–160		
		PN_{floor}		–164		
SPUR	Spurious suppression between dual banks	F_{IN0} = 491.52 MHz, F_{IN1} = 61.44 MHz; Measured between neighboring outputs		–60		dB
		F_{IN0} = 491.52 MHz, F_{IN1} = 15.36 MHz; Measured between neighboring outputs		–70		
ODC	Output duty cycle	With 50% duty cycle input	45		55	%
t_R/t_F	Output rise and fall time	20% to 80% with R_{LOAD} = 100 Ω			300	ps
t_R/t_F	Output rise and fall time	20% to 80% with RLOAD = 100 Ω (AMP_SEL= 1)			300	ps
V_{AC_REF}	Reference output voltage	VDD = 2.5 V, I_{LOAD} = 100 µA	0.9	1.25	1.375	V
POWER SUPPLY NOISE REJECTION (PSNR) V_{DD} = 2.5 V/ 3.3 V						
PSNR	Power Supply Noise Rejection ($f_{carrier}$ = 156.25 MHz)	10 kHz, 100 mVpp ripple injected on V_{DD}		–70		dBc
		1 MHz, 100 mVpp ripple injected on V_{DD}		–50		

(1) Measured between single-ended/differential input crossing point to the differential output crossing point.
(2) For the dual bank devices, the inputs are phase aligned and have 50% duty cycle.
(3) Applies to the dual bank family.

(4) Defined as the magnitude of the time difference between the high-to-low and low-to-high propagation delay times at an output.

Copyright © 2022 Texas Instruments Incorporated

6.6 Typical Characteristics

Figure 6-1 (LMK1D2106) and Figure 6-3 (LMK1D2108) capture the variation of the current consumption with input frequency and supply voltage when AMP_SEL = 0. Figure 6-2 (LMK1D2106) and Figure 6-4 (LMK1D2108) show the current consumption variation when AMP_SEL = 1. Figure 6-5 and Figure 6-6 portray the variation of the differential output voltage (VOD) swept across frequency.

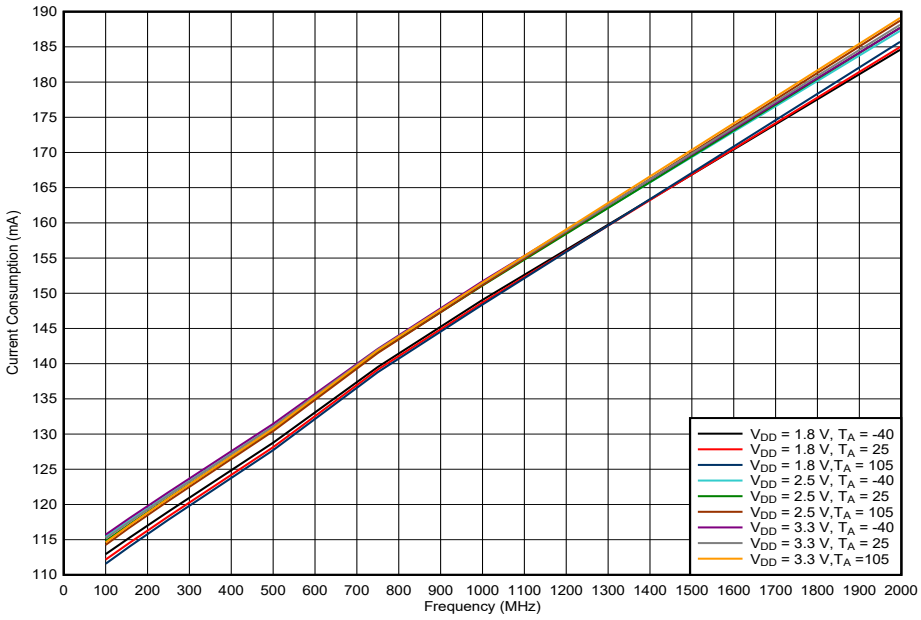

Figure 6-1. LMK1D2106 Current Consumption vs. Frequency, AMP_SEL = 0

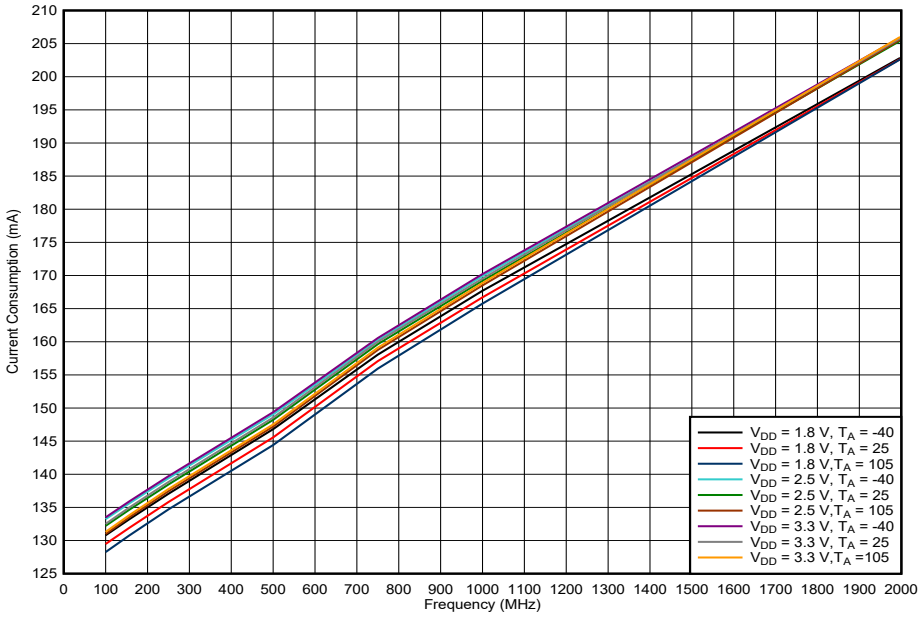

Figure 6-2. LMK1D2106 Current Consumption vs. Frequency, AMP_SEL = 1

6.6 Typical Characteristics

Figure 6-1 (LMK1D2106) and Figure 6-3 (LMK1D2108) capture the variation of the current consumption with input frequency and supply voltage when AMP_SEL = 0. Figure 6-2 (LMK1D2106) and Figure 6-4 (LMK1D2108) show the current consumption variation when AMP_SEL = 1. Figure 6-5 and Figure 6-6 portray the variation of the differential output voltage (VOD) swept across frequency.

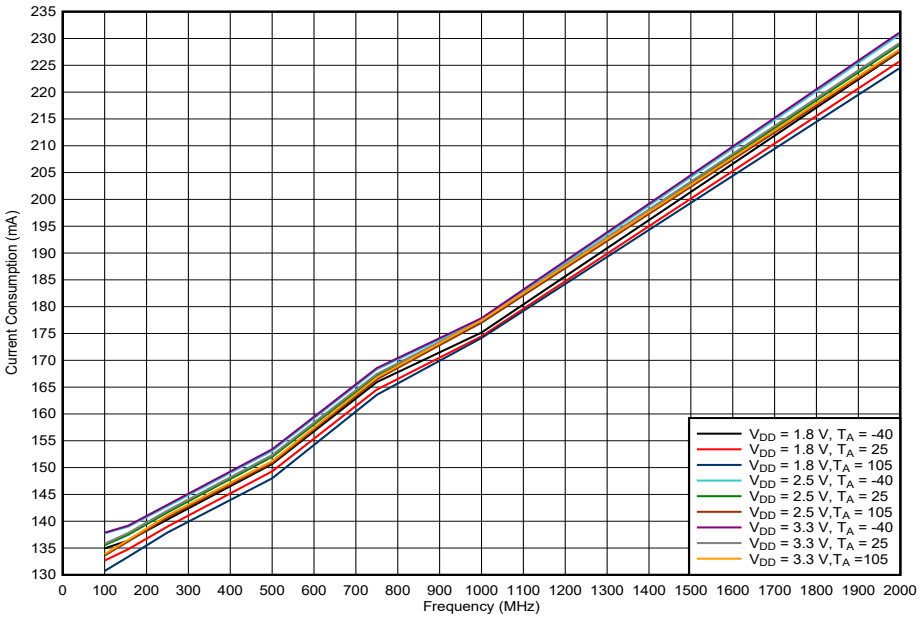

Figure 6-3. LMK1D2108 Current Consumption vs. Frequency, AMP_SEL = 0

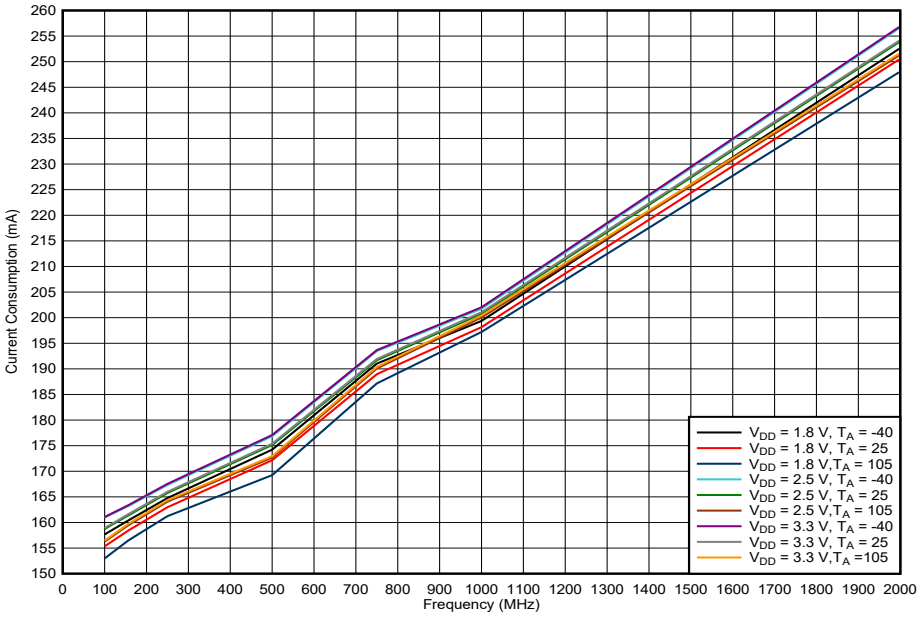

Figure 6-4. LMK1D2108 Current Consumption vs. Frequency, AMP_SEL = 1

Copyright © 2022 Texas Instruments Incorporated

6.6 Typical Characteristics

Figure 6-1 (LMK1D2106) and Figure 6-3 (LMK1D2108) capture the variation of the current consumption with input frequency and supply voltage when AMP_SEL = 0. Figure 6-2 (LMK1D2106) and Figure 6-4 (LMK1D2108) show the current consumption variation when AMP_SEL = 1. Figure 6-5 and Figure 6-6 portray the variation of the differential output voltage (VOD) swept across frequency.

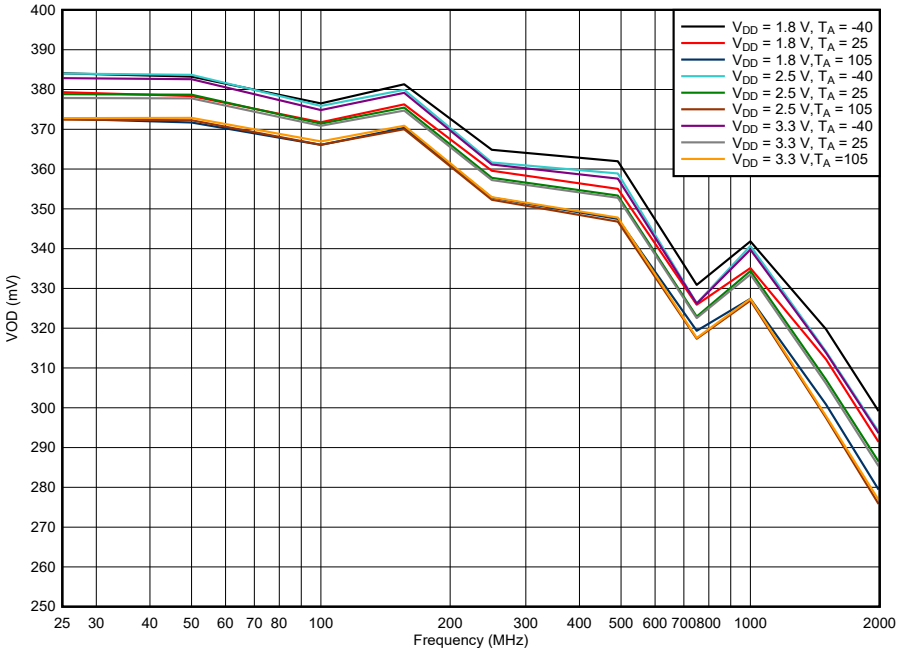

Figure 6-5. LMK1D210x VOD vs. Frequency, AMP_SEL = 0

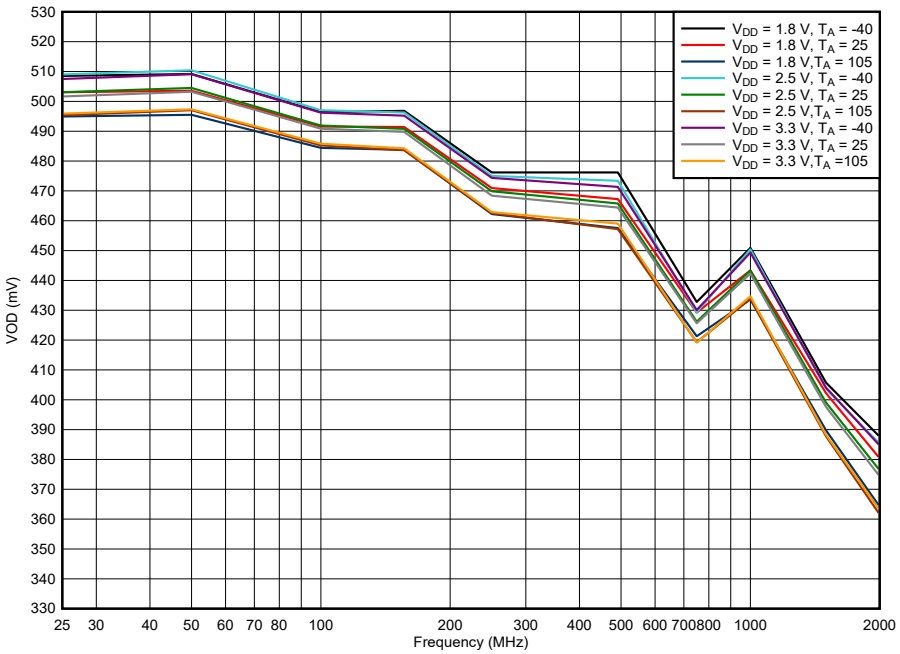

Figure 6-6. LMK1D210x VOD vs. Frequency, AMP_SEL = 1

7 Parameter Measurement Information

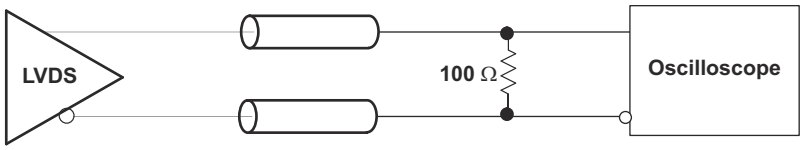

Figure 7-1. LVDS Output DC Configuration During Device Test

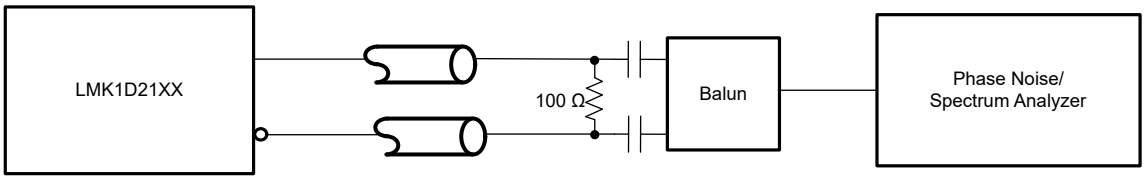

Figure 7-2. LVDS Output AC Configuration During Device Test

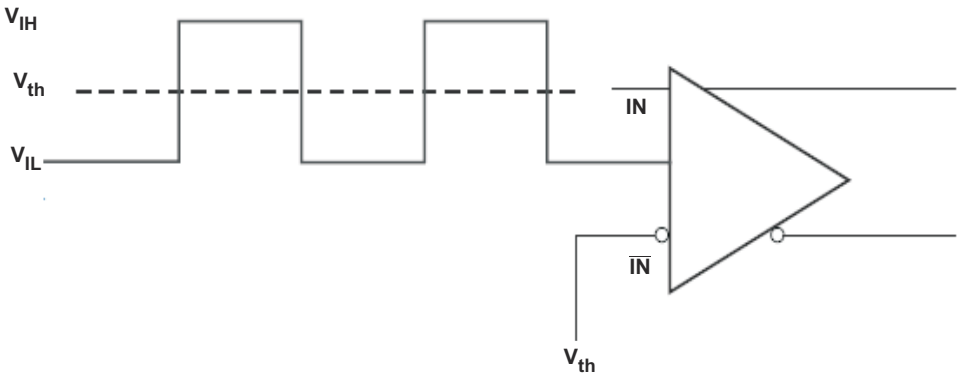

Figure 7-3. DC-Coupled LVCMOS Input During Device Test

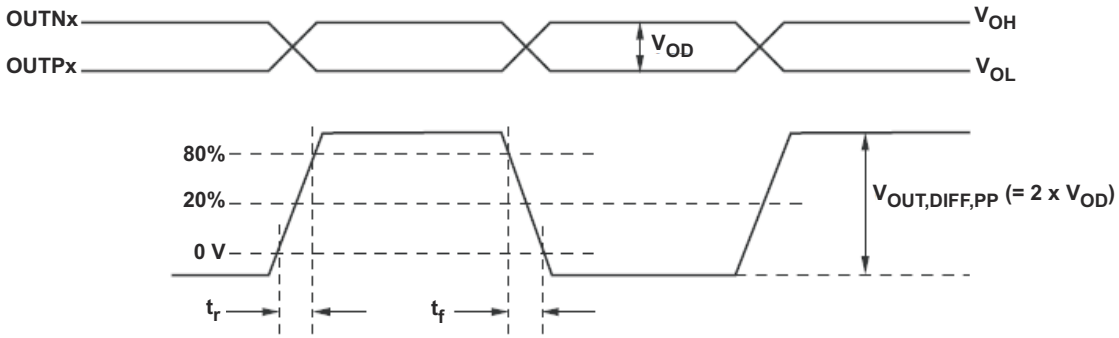

Figure 7-4. Output Voltage and Rise/Fall Time

Copyright © 2022 Texas Instruments Incorporated

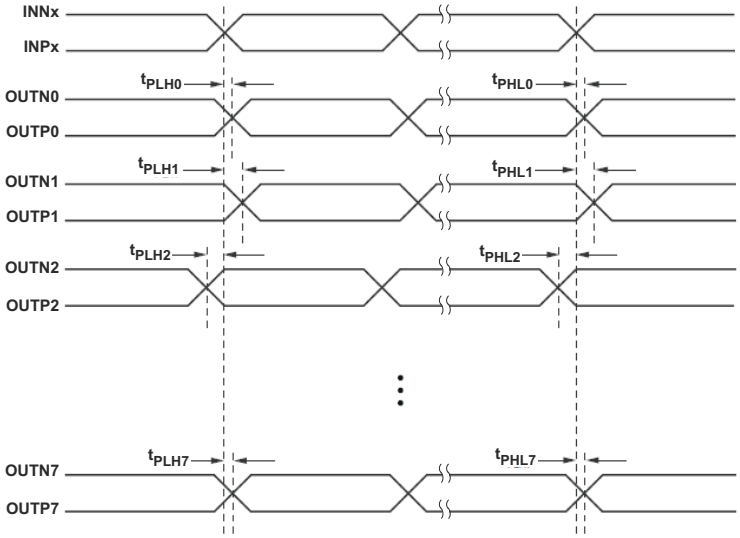

A. Output skew is calculated as the greater of the following: the difference between the fastest and the slowest t_{PLHn} or the difference between the fastest and the slowest t_{PHLn} (n = 0, 1, 2, ..7)

B. Part-to-part skew is calculated as the greater of the following: the difference between the fastest and the slowest t_{PLHn} or the difference between the fastest and the slowest t_{PHLn} across multiple devices (n = 0, 1, 2, ..7)

Figure 7-5. Output Skew and Part-to-Part Skew

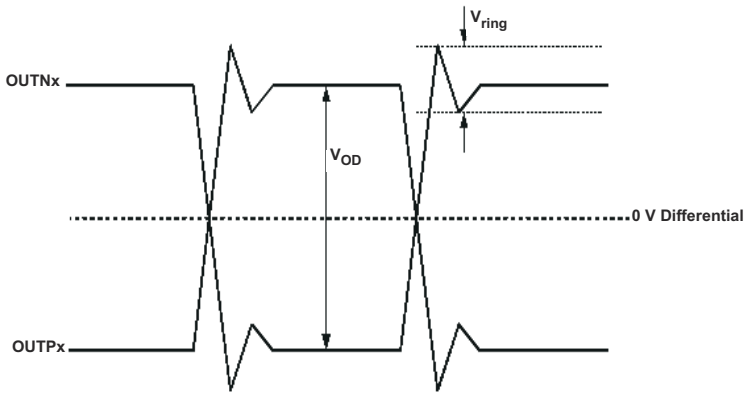

Figure 7-6. Output Overshoot and Undershoot

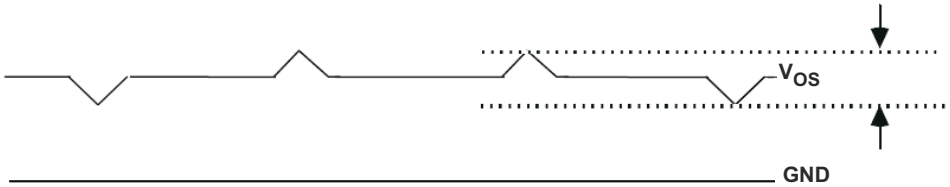

Figure 7-7. Output AC Common Mode

8 Detailed Description

8.1 Overview

The LMK1D210x LVDS drivers use CMOS transistors to control the output current. Therefore, proper biasing and termination are required to ensure correct operation of the device and to maximize signal integrity.

The proper LVDS termination for signal integrity over two 50-Ω lines is 100 Ω between the outputs on the receiver end. Either DC-coupled termination or AC-coupled termination can be used for LVDS outputs. TI recommends placing a termination resistor close to the receiver. If the receiver is internally biased to a voltage different than the output common-mode voltage of the LMK1D210x, AC coupling must be used. If the LVDS receiver has internal 100-Ω termination, external termination must be omitted.

8.2 Functional Block Diagram

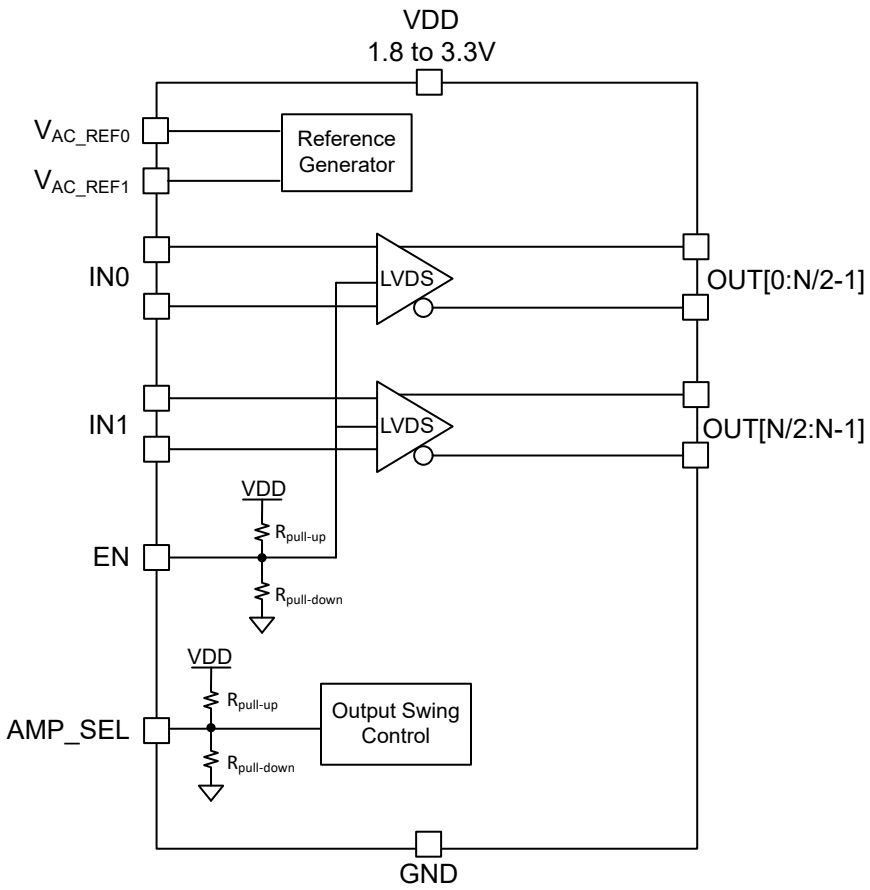

Copyright © 2022 Texas Instruments Incorporated

8.3 Feature Description

The LMK1D210x is a low additive jitter LVDS fan-out buffer that can generate up to 6 (LMK1D2106) or 8 (LMK1D2108) LVDS copies of a single input that is either LVDS, LVPECL, HCSL, CML, or LVCMOS on each of its banks. The device has two banks, therefore this translates to a total of 12 (LMK1D2106) or 16 (LMK1D2108) pairs of outputs. Refer to the Table 8-1 for output bank mapping. The reference clock frequencies can go up to 2 GHz.

Table 8-1. Output Bank

Bank	LMK1D2106	LMK1D2108
0	OUT0 to OUT5	OUT0 to OUT7
1	OUT6 to OUT11	OUT8 to OUT15

Apart from providing a very low additive jitter and low output skew, the LMK1D210x has an output bank enable/disable control pin (EN) and an output amplitude control pin (AMP_SEL).

8.3.1 Fail-Safe Input

The LMK1D210x family of devices is designed to support fail-safe input operation. This feature allows the user to drive the device inputs before VDD is applied without damaging the device. Refer to the *Absolute Maximum Ratings* for more information on the maximum input supported by the device. The device also incorporates an input hysteresis, which prevents random oscillation in absence of an input signal, allowing the input pins to be left open.

8.4 Device Functional Modes

The output banks of the LMK1D210x can be selected through the control pin (see Table 8-2). Unused inputs can be left floating to reduce overall component cost. Both AC- and DC-coupling schemes can be used with the LMK1D210x to provide greater system flexibility.

Table 8-2. Output Control

EN	CLOCK OUTPUTS
0	All bank outputs disabled (static logic "0")
1	Bank 0 outputs enabled and Bank 1 outputs disabled
OPEN	All bank outputs enabled

The output amplitude of the banks of the LMK1D210x can be selected through the amplitude selection pin (see Table 8-3). The higher output amplitude mode (boosted swing LVDS mode) can be used in applications which require higher amplitude either for better noise performance (higher slew rate) or if the receiver has swing requirements which the standard LVDS swing cannot meet.

Table 8-3. Amplitude Selection

AMP_SEL	OUTPUT AMPLITUDE (mV)
0	Bank 0: boosted LVDS swing (500 mV) Bank 1: standard LVDS swing (350 mV)
OPEN	Bank 0: standard LVDS swing (350 mV) Bank 1: standard LVDS swing (350 mV)
1	Bank 0: boosted LVDS swing (500 mV) Bank 1: boosted LVDS swing (500 mV)

8.4.1 LVDS Output Termination

TI recommends unused outputs to be terminated differentially with a 100-Ω resistor for optimum performance, although unterminated outputs are also okay but will result in slight degradation in performance (Output AC common-mode V_{OS}) in the outputs being used.

Copyright © 2022 Texas Instruments Incorporated

The LMK1D210x can be connected to LVDS receiver inputs with DC and AC coupling as shown in Figure 8-1 and Figure 8-2, respectively.

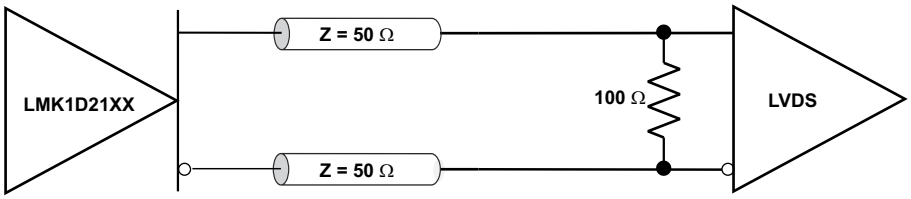

Figure 8-1. Output DC Termination

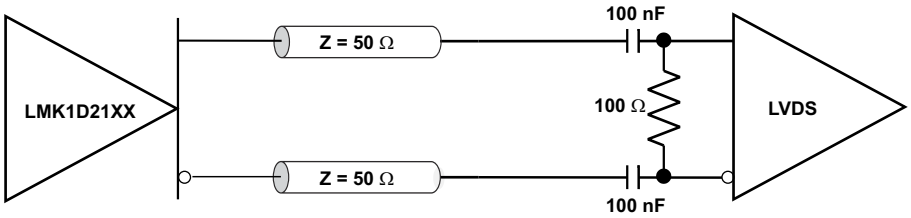

Figure 8-2. Output AC Termination (With the Receiver Internally Biased)

8.4.2 Input Termination

The LMK1D210x inputs can be interfaced with LVDS, LVPECL, HCSL, or LVCMOS drivers.

LVDS drivers can be connected to LMK1D210x inputs with DC and AC coupling as shown Figure 8-3 and Figure 8-4, respectively.

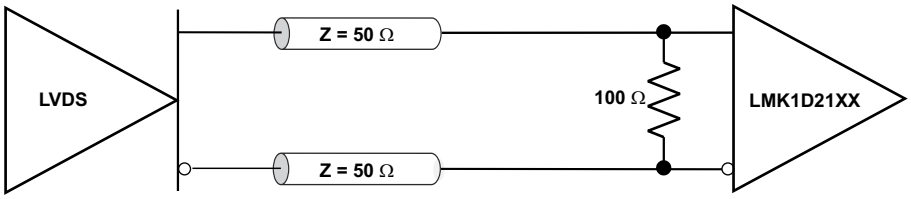

Figure 8-3. LVDS Clock Driver Connected to LMK1D210x Input (DC-Coupled)

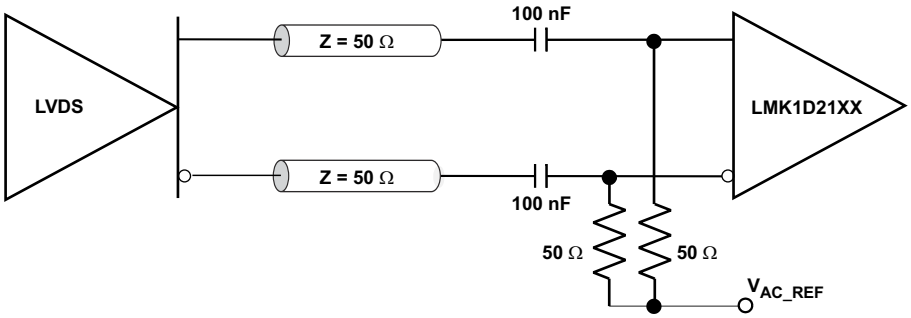

Figure 8-4. LVDS Clock Driver Connected to LMK1D210x Input (AC-Coupled)

Figure 8-5 shows how to connect LVPECL inputs to the LMK1D210x. The series resistors are required to reduce the LVPECL signal swing if the signal swing is >1.6 V_{PP}.

Copyright © 2022 Texas Instruments Incorporated

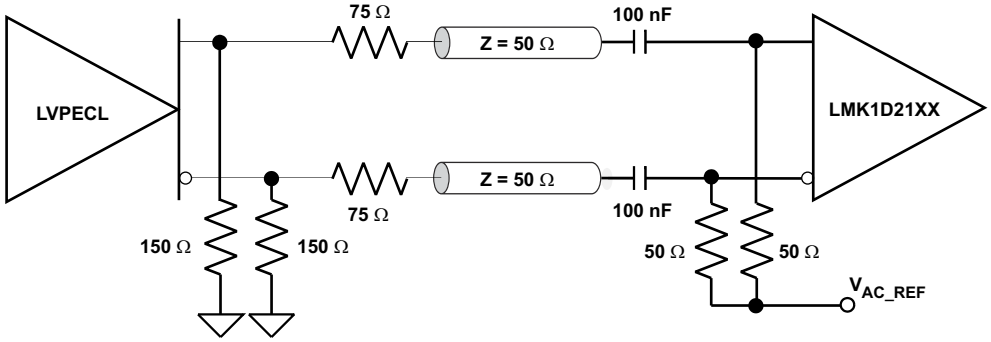

Figure 8-5. LVPECL Clock Driver Connected to LMK1D210x Input

Figure 8-6 shows how to couple a LVCMOS clock input to the LMK1D210x directly.

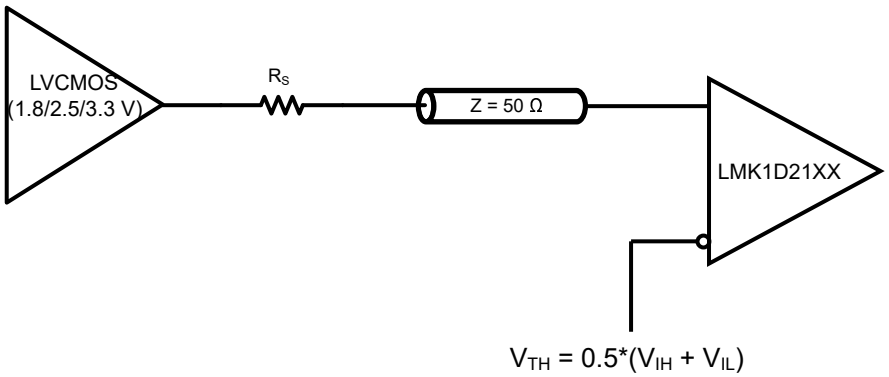

Figure 8-6. 1.8-V, 2.5-V, or 3.3-V LVCMOS Clock Driver Connected to LMK1D210x Input

For unused input, TI recommends grounding both input pins (INP, INN) using 1-kΩ resistors.

9 Application and Implementation

Note

Information in the following applications sections is not part of the TI component specification, and TI does not warrant its accuracy or completeness. TI's customers are responsible for determining suitability of components for their purposes, as well as validating and testing their design implementation to confirm system functionality.

9.1 Application Information

The LMK1D210x is a low additive jitter universal to LVDS fan-out buffer with dual inputs which fan-out to dual outputs banks. Each input can fan-out to six outputs in case of LMK1D2106 and eight outputs in case of LMK1D2108. The small package size, 1.8-V power supply operation, low output skew, and low additive jitter is desgined for applications that require high-performance clock distribution as well as for low-power and space-constraint applications.

9.2 Typical Application

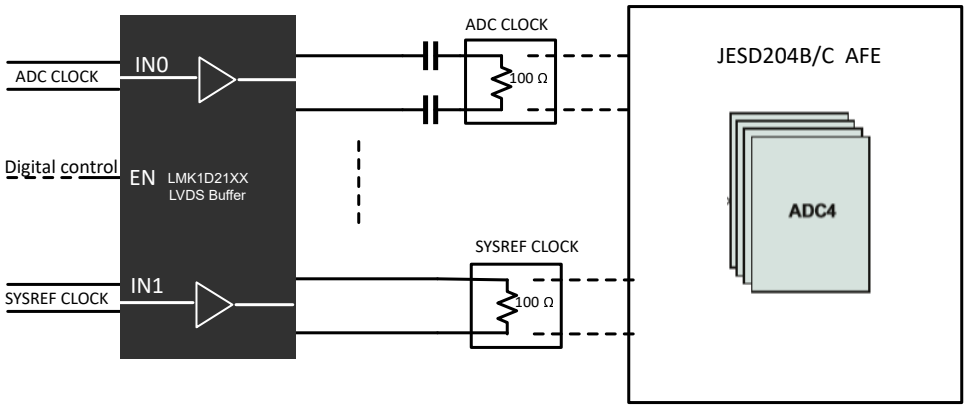

Figure 9-1. Fan-Out Buffer for ADC Device Clock and SYSREF Distribution

9.2.1 Design Requirements

The LMK1D210x shown in Figure 9-1 is configured to fan-out an ADC clock on the first output bank and SYSREF clock on the second output bank for a system using the JESD204B/C ADC. The low output-to-output skew, very low additive jitter and superior spurious suppression between dual banks makes the LMK1D210x a simple, robust and low-cost solution for distributing various clocks to JESD204B/C AFE systems. The configuration example can drive up to 4 ADC clocks and 4 SYSREF clocks for a JESD204B/C receiver with the following properties:

- The ADC clock receiver module is typically AC-coupled with an LVDS driver such as the LMK1D210x due to differences in common-mode voltage between the driver and receiver. Depending on the receiver, there maybe an option for internal 100-Ω differential termination in which case an external termination would not be required for the LMK1D210x.
- The SYSREF clock receiver module is typically DC-coupled provided the common-mode voltage of the LMK1D210x outputs match with the receiver. An external termination may not be needed in case of an internal termination in the receiver.
- Unused outputs of the LMK1D210x device are terminated differentially with a 100-Ω resistor for optimum performance.

Copyright © 2022 Texas Instruments Incorporated

9.2.2 Detailed Design Procedure

See *Input Termination* for proper input terminations, dependent on single-ended or differential inputs.

See *LVDS Output Termination* for output termination schemes depending on the receiver application.

TI recommends unused outputs to be terminated differentially with a 100-Ω resistor for optimum performance, although unterminated outputs are also okay but will result in slight degradation in performance (Output AC common-mode V_{OS}) in the outputs being used.

In this application example, the ADC clock and SYSREF clocks require different output interfacing schemes. Power-supply filtering and bypassing is critical for low-noise applications.

In case of common-mode mismatch between the output voltage of the LMK1D210x and the receiver, one can use AC coupling to get around this. It might not be possible in certain applications, however, to AC-couple the LMK1D210x outputs to the receiver due to the settling time associated with this AC-coupling network (High-pass filter), which can result in non-deterministic behavior during the initial transients. For such applications, DC-coupling the outputs is necessary and thus requires a scheme which can overcome the inherent mismatch between the common-mode voltage of the driver and receiver.

The application report *Interfacing LVDS Driver With a Sub-LVDS Receiver* discusses how to interface between a LVDS driver and sub-LVDS receiver. The same concept can be applied to interface the LMK1D210x outputs to a receiver which has a lower common-mode voltage.

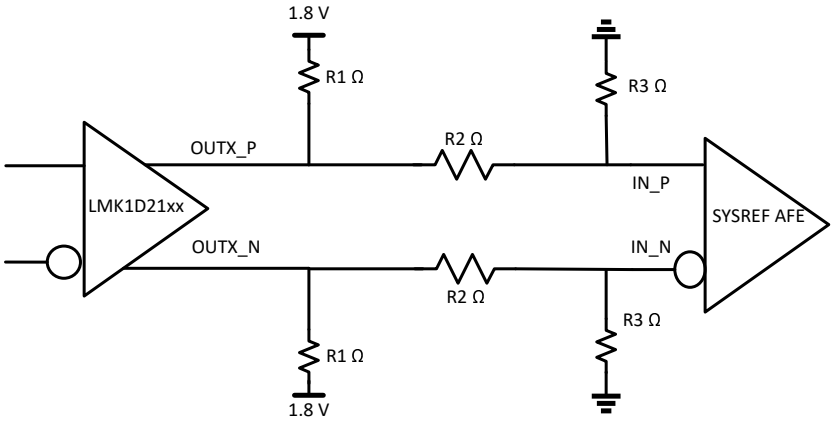

Figure 9-2. Schematic for DC-Coupling LMK1D21xx With Lower Common-Mode Receiver

Figure 9-2 shows the resistor divider network for stepping down the common-mode voltage as explained in the above application report. The resistors R1, R2 and R3 are chosen according to the input common-mode voltage requirements of the receiver. As highlighted before, make sure that the reduced swing is able to meet the requirements of the receiver. Higher swing mode (boosted LVDS swing mode) can be selected using the AMP_SEL pin highlighted in Table 8-3 to compensate for the reduced swing as the result of the resistor voltage divider.

9.2.3 Application Curves

The low additive noise of the LMK1D2108. The low noise 156.25-MHz source with 25-fs RMS jitter, shown in Figure 9-3, drives the LMK1D2108, resulting in 46.9-fs RMS when integrated from 12 kHz to 20 MHz (Figure 9-4). The resultant additive jitter is a low 39.7-fs RMS for this configuration. Note that this result applies to the LMK1D2106 device as well.

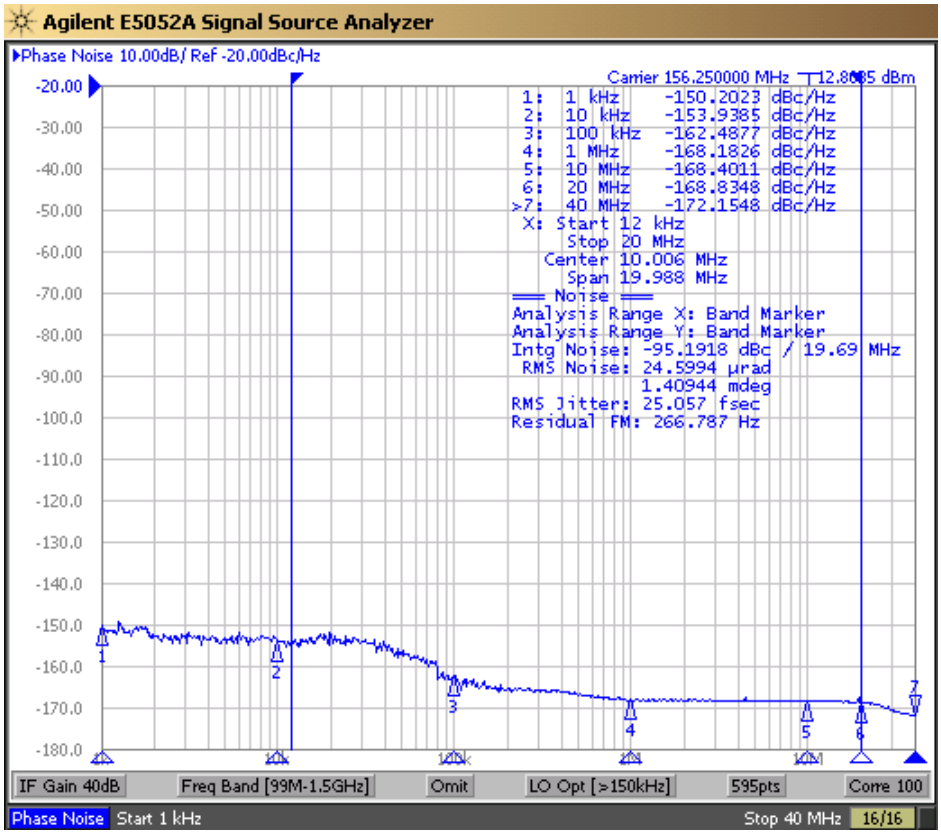

Note: Reference signal is a low-noise Rhode and Schwarz SMA100B

Figure 9-3. LMK1D2108 Reference Phase Noise, 156.25 MHz, 25-fs RMS (12 kHz to 20 MHz)

Copyright © 2022 Texas Instruments Incorporated

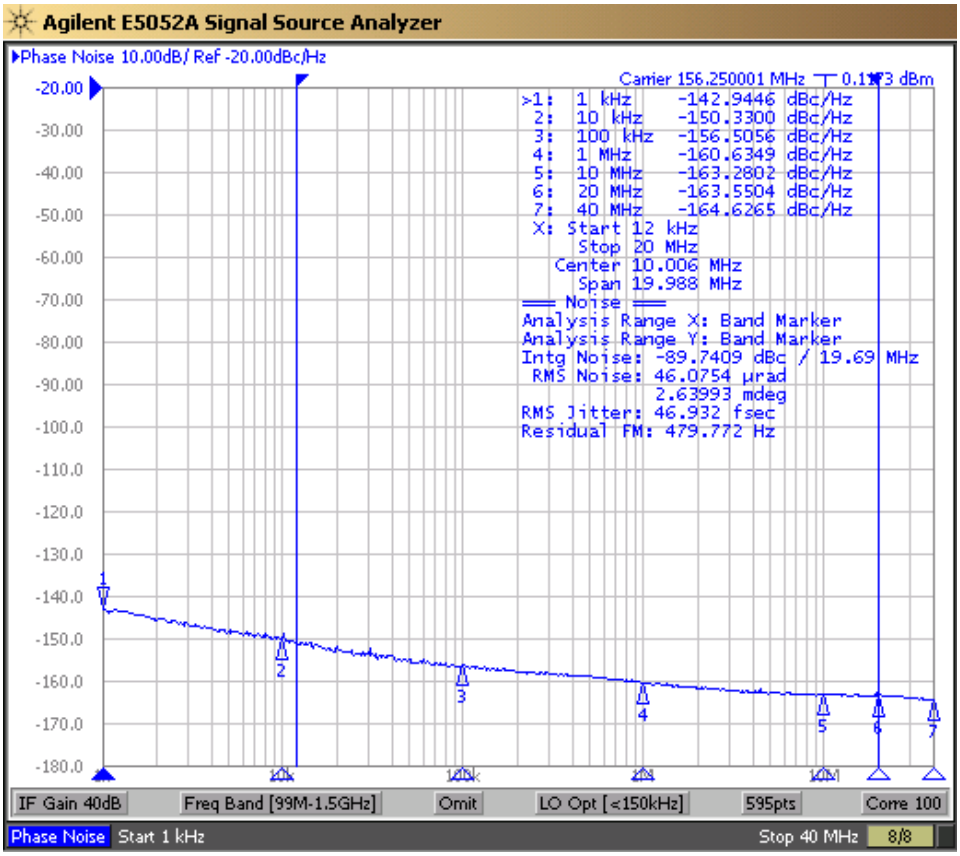

Figure 9-4. LMK1D2108 Output Phase Noise, 156.25 MHz, 46.9-fs RMS (12 kHz to 20 MHz)

10 Power Supply Recommendations

High-performance clock buffers are sensitive to noise on the power supply, which can dramatically increase the additive jitter of the buffer. Thus, it is essential to reduce noise from the system power supply, especially when jitter or phase noise is critical to applications.

Filter capacitors are used to eliminate the low-frequency noise from the power supply, where the bypass capacitors provide the low impedance path for high-frequency noise and guard the power-supply system against the induced fluctuations. These bypass capacitors also provide instantaneous current surges as required by the device and must have low equivalent series resistance (ESR). To properly use the bypass capacitors, they must be placed close to the power-supply pins and laid out with short loops to minimize inductance. TI recommends adding as many high-frequency (for example, 0.1-µF) bypass capacitors as there are supply pins in the package. TI recommends, but does not require, inserting a ferrite bead between the board power supply and the chip power supply that isolates the high-frequency switching noises generated by the clock driver. These ferrite beads prevent the switching noise from leaking into the board supply. Choose an appropriate ferrite bead with low DC resistance because it is imperative to provide adequate isolation between the board supply and the chip supply, as well as to maintain a voltage at the supply pins that is greater than the minimum voltage required for proper operation.

Figure 10-1 shows this recommended power-supply decoupling method.

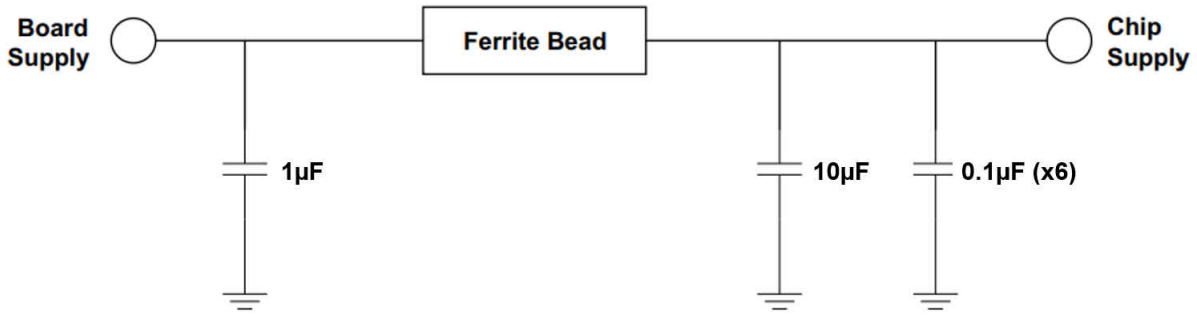

Figure 10-1. Power Supply Decoupling

Copyright © 2022 Texas Instruments Incorporated

11 Layout

11.1 Layout Guidelines

For reliability and performance reasons, the die temperature must be limited to a maximum of 135°C.

The device package has an exposed pad that provides the primary heat removal path to the printed circuit board (PCB). To maximize the heat dissipation from the package, a thermal landing pattern including multiple vias to a ground plane must be incorporated into the PCB within the footprint of the package. The thermal pad must be soldered down to ensure adequate heat conduction to of the package. Figure 11-1 and Figure 11-2 show the recommended top layer and via patterns for the 40-pin package (LMK1D2106).

11.2 Layout Examples

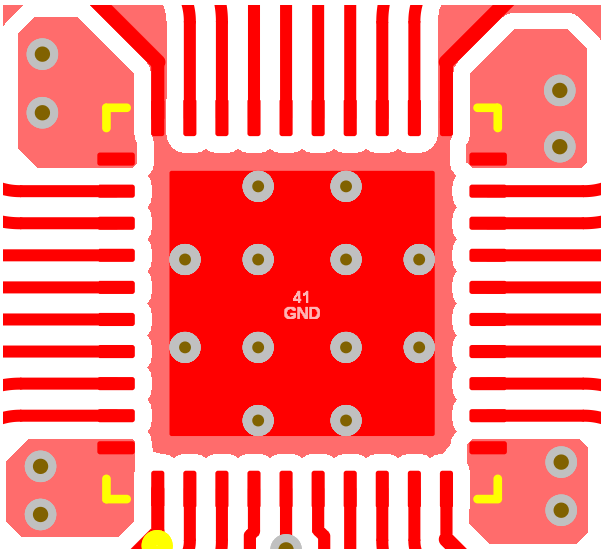

Figure 11-1. PCB layout example for LMK1D2106, Top Layer

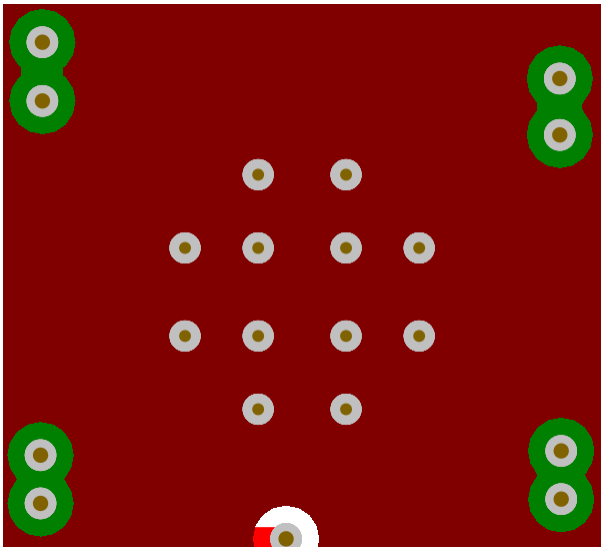

Figure 11-2. PCB Layout Example for LMK1D2106, GND layer

12 Device and Documentation Support

12.1 Documentation Support

12.1.1 Related Documentation

For related documentation see the following:

- Texas Instruments, *Low-Additive Jitter, Four LVDS Outputs Clock Buffer Evaluation Board* user's guide
- Texas Instruments, *Power Consumption of LVPECL and LVDS* Analog design journal
- Texas Instruments, *Using Thermal Calculation Tools for Analog Components* application report

12.2 Receiving Notification of Documentation Updates

To receive notification of documentation updates, navigate to the device product folder on ti.com. Click on *Subscribe to updates* to register and receive a weekly digest of any product information that has changed. For change details, review the revision history included in any revised document.

12.3 Support Resources

TI E2E™ support forums are an engineer's go-to source for fast, verified answers and design help — straight from the experts. Search existing answers or ask your own question to get the quick design help you need.

Linked content is provided "AS IS" by the respective contributors. They do not constitute TI specifications and do not necessarily reflect TI's views; see TI's Terms of Use.

12.4 Trademarks

TI E2E™ is a trademark of Texas Instruments.
All trademarks are the property of their respective owners.

12.5 Electrostatic Discharge Caution

This integrated circuit can be damaged by ESD. Texas Instruments recommends that all integrated circuits be handled with appropriate precautions. Failure to observe proper handling and installation procedures can cause damage.

ESD damage can range from subtle performance degradation to complete device failure. Precision integrated circuits may be more susceptible to damage because very small parametric changes could cause the device not to meet its published specifications.

12.6 Glossary

TI Glossary	This glossary lists and explains terms, acronyms, and definitions.

13 Mechanical, Packaging, and Orderable Information

The following pages include mechanical, packaging, and orderable information. This information is the most current data available for the designated devices. This data is subject to change without notice and revision of this document. For browser-based versions of this data sheet, refer to the left-hand navigation.

Copyright © 2022 Texas Instruments Incorporated

PACKAGING INFORMATION

Orderable part number	Status (1)	Material type (2)	Package | Pins	Package qty | Carrier	RoHS (3)	Lead finish/ Ball material (4)	MSL rating/ Peak reflow (5)	Op temp (°C)	Part marking (6)
LMK1D2106RHAR	Active	Production	VQFN (RHA) | 40	2500 | LARGE T&R	Yes	NIPDAU	Level-1-260C-UNLIM	-40 to 105	LMK1D 2106
LMK1D2106RHAR.B	Active	Production	VQFN (RHA) | 40	2500 | LARGE T&R	Yes	NIPDAU	Level-1-260C-UNLIM	-40 to 105	LMK1D 2106
LMK1D2106RHAT	Active	Production	VQFN (RHA) | 40	250 | SMALL T&R	Yes	NIPDAU	Level-1-260C-UNLIM	-40 to 105	LMK1D 2106
LMK1D2106RHAT.B	Active	Production	VQFN (RHA) | 40	250 | SMALL T&R	Yes	NIPDAU	Level-1-260C-UNLIM	-40 to 105	LMK1D 2106
LMK1D2108RGZR	Active	Production	VQFN (RGZ) | 48	2500 | LARGE T&R	Yes	NIPDAU	Level-2-260C-1 YEAR	-40 to 105	LMK1D 2108
LMK1D2108RGZR.B	Active	Production	VQFN (RGZ) | 48	2500 | LARGE T&R	Yes	NIPDAU	Level-2-260C-1 YEAR	-40 to 105	LMK1D 2108
LMK1D2108RGZT	Active	Production	VQFN (RGZ) | 48	250 | SMALL T&R	Yes	NIPDAU	Level-2-260C-1 YEAR	-40 to 105	LMK1D 2108
LMK1D2108RGZT.B	Active	Production	VQFN (RGZ) | 48	250 | SMALL T&R	Yes	NIPDAU	Level-2-260C-1 YEAR	-40 to 105	LMK1D 2108
LMK1D2108RGZTG4	Active	Production	VQFN (RGZ) | 48	250 | SMALL T&R	Yes	NIPDAU	Level-2-260C-1 YEAR	-40 to 105	LMK1D 2108
LMK1D2108RGZTG4.B	Active	Production	VQFN (RGZ) | 48	250 | SMALL T&R	Yes	NIPDAU	Level-2-260C-1 YEAR	-40 to 105	LMK1D 2108

(1) **Status:** For more details on status, see our product life cycle.

(2) **Material type:** When designated, preproduction parts are prototypes/experimental devices, and are not yet approved or released for full production. Testing and final process, including without limitation quality assurance, reliability performance testing, and/or process qualification, may not yet be complete, and this item is subject to further changes or possible discontinuation. If available for ordering, purchases will be subject to an additional waiver at checkout, and are intended for early internal evaluation purposes only. These items are sold without warranties of any kind.

(3) **RoHS values:** Yes, No, RoHS Exempt. See the TI RoHS Statement for additional information and value definition.

(4) **Lead finish/Ball material:** Parts may have multiple material finish options. Finish options are separated by a vertical ruled line. Lead finish/Ball material values may wrap to two lines if the finish value exceeds the maximum column width.

(5) **MSL rating/Peak reflow:** The moisture sensitivity level ratings and peak solder (reflow) temperatures. In the event that a part has multiple moisture sensitivity ratings, only the lowest level per JEDEC standards is shown. Refer to the shipping label for the actual reflow temperature that will be used to mount the part to the printed circuit board.

(6) **Part marking:** There may be an additional marking, which relates to the logo, the lot trace code information, or the environmental category of the part.

Multiple part markings will be inside parentheses. Only one part marking contained in parentheses and separated by a "~" will appear on a part. If a line is indented then it is a continuation of the previous line and the two combined represent the entire part marking for that device.

Important Information and Disclaimer: The information provided on this page represents TI's knowledge and belief as of the date that it is provided. TI bases its knowledge and belief on information provided by third parties, and makes no representation or warranty as to the accuracy of such information. Efforts are underway to better integrate information from third parties. TI has taken and continues to take reasonable steps to provide representative and accurate information but may not have conducted destructive testing or chemical analysis on incoming materials and chemicals. TI and TI suppliers consider certain information to be proprietary, and thus CAS numbers and other limited information may not be available for release.

In no event shall TI's liability arising out of such information exceed the total purchase price of the TI part(s) at issue in this document sold by TI to Customer on an annual basis.

TAPE AND REEL INFORMATION

REEL DIMENSIONS

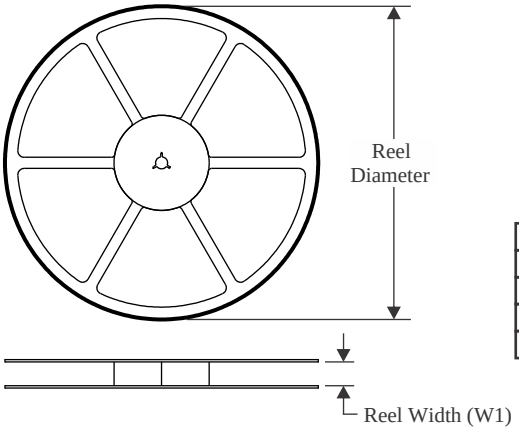

TAPE DIMENSIONS

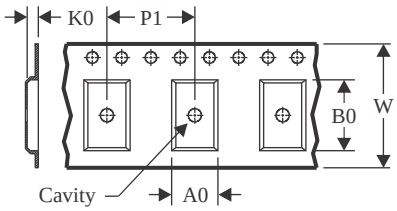

A0	Dimension designed to accommodate the component width
B0	Dimension designed to accommodate the component length
K0	Dimension designed to accommodate the component thickness
W	Overall width of the carrier tape
P1	Pitch between successive cavity centers

QUADRANT ASSIGNMENTS FOR PIN 1 ORIENTATION IN TAPE

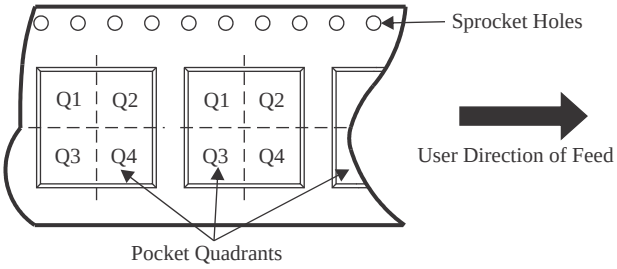

*All dimensions are nominal

Device	Package Type	Package Drawing	Pins	SPQ	Reel Diameter (mm)	Reel Width W1 (mm)	A0 (mm)	B0 (mm)	K0 (mm)	P1 (mm)	W (mm)	Pin1 Quadrant
LMK1D2106RHAR	VQFN	RHA	40	2500	330.0	16.4	6.3	6.3	1.1	12.0	16.0	Q2
LMK1D2106RHAT	VQFN	RHA	40	250	180.0	16.4	6.3	6.3	1.1	12.0	16.0	Q2
LMK1D2108RGZR	VQFN	RGZ	48	2500	330.0	16.4	7.3	7.3	1.1	12.0	16.0	Q2
LMK1D2108RGZT	VQFN	RGZ	48	250	180.0	16.4	7.3	7.3	1.1	12.0	16.0	Q2
LMK1D2108RGZTG4	VQFN	RGZ	48	250	180.0	16.4	7.3	7.3	1.1	12.0	16.0	Q2

TAPE AND REEL BOX DIMENSIONS

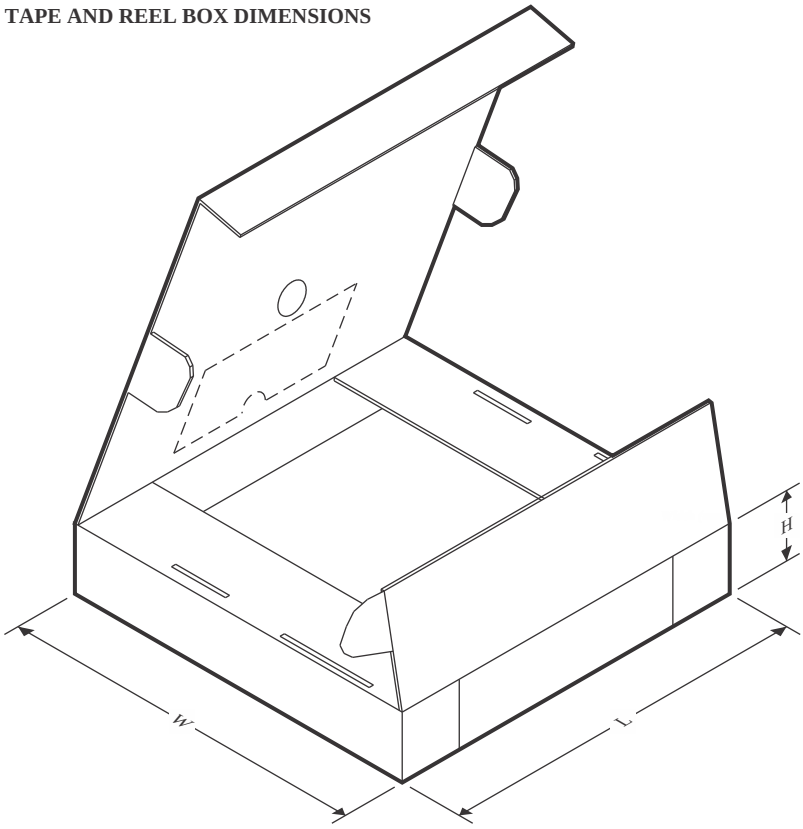

*All dimensions are nominal

Device	Package Type	Package Drawing	Pins	SPQ	Length (mm)	Width (mm)	Height (mm)
LMK1D2106RHAR	VQFN	RHA	40	2500	360.0	360.0	36.0
LMK1D2106RHAT	VQFN	RHA	40	250	210.0	185.0	35.0
LMK1D2108RGZR	VQFN	RGZ	48	2500	360.0	360.0	36.0
LMK1D2108RGZT	VQFN	RGZ	48	250	210.0	185.0	35.0
LMK1D2108RGZTG4	VQFN	RGZ	48	250	210.0	185.0	35.0

GENERIC PACKAGE VIEW

RHA 40

VQFN - 1 mm max height

6 x 6, 0.5 mm pitch

PLASTIC QUAD FLATPACK - NO LEAD

This image is a representation of the package family, actual package may vary.
Refer to the product data sheet for package details.

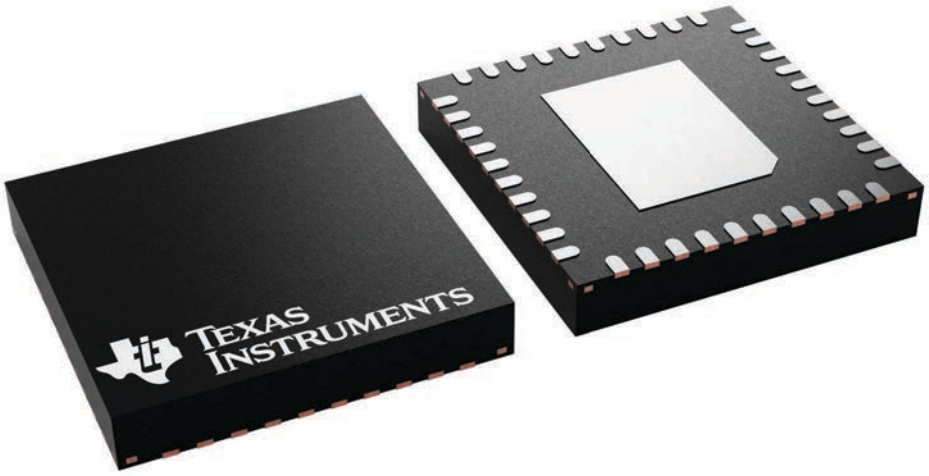

4225870/A

PACKAGE OUTLINE

RHA0040B

VQFN - 1 mm max height

PLASTIC QUAD FLATPACK - NO LEAD

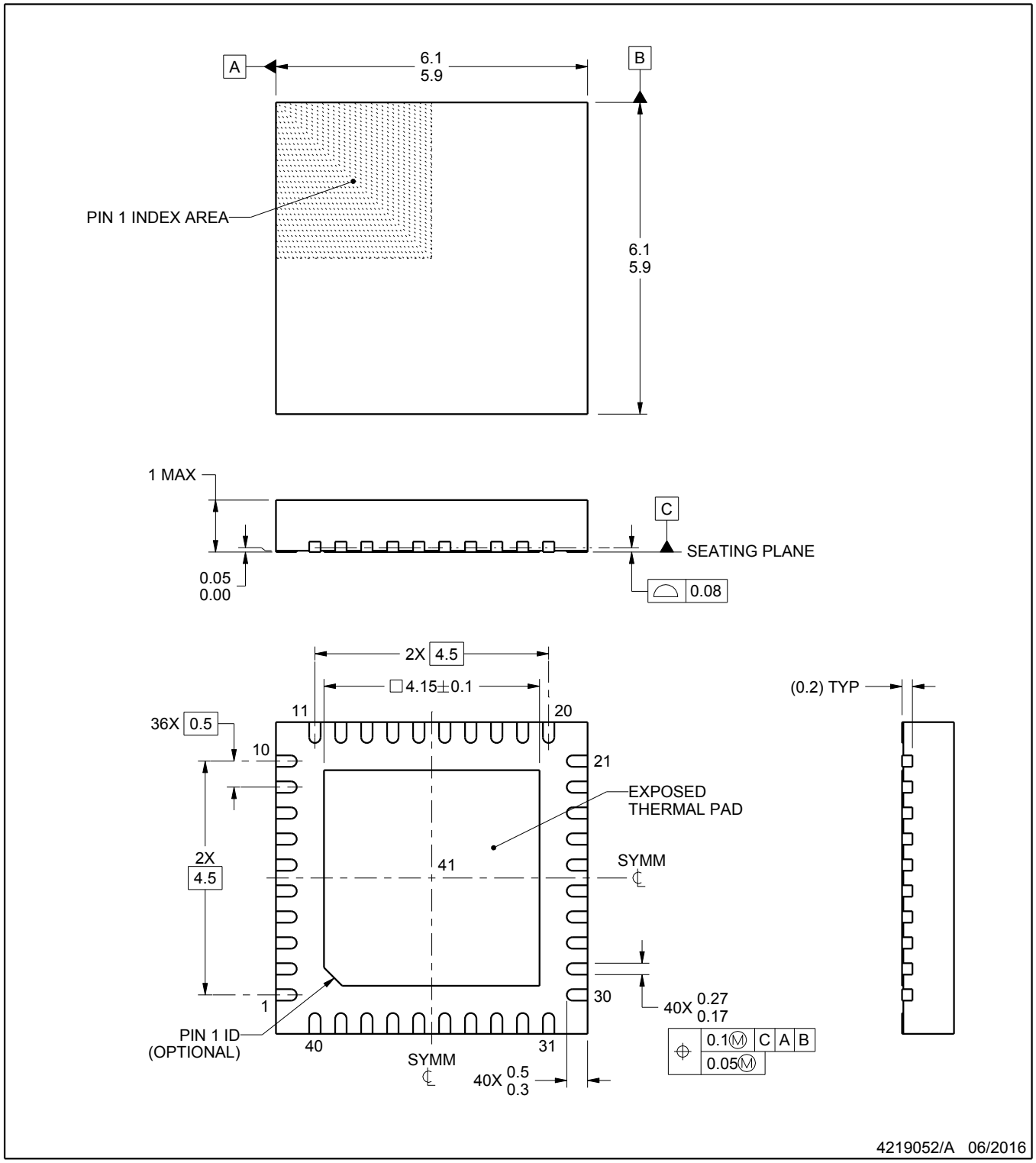

NOTES:

1. All linear dimensions are in millimeters. Any dimensions in parenthesis are for reference only. Dimensioning and tolerancing per ASME Y14.5M.
2. This drawing is subject to change without notice.
3. The package thermal pad must be soldered to the printed circuit board for thermal and mechanical performance.

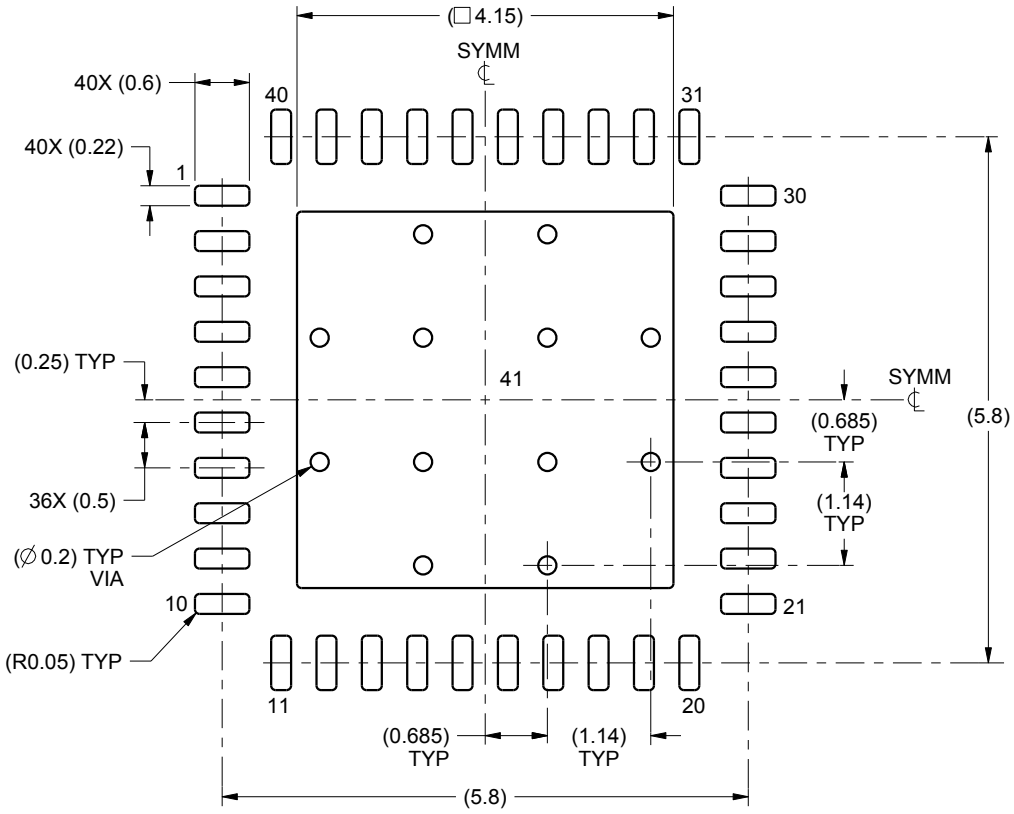

LAND PATTERN EXAMPLE
SCALE:12X

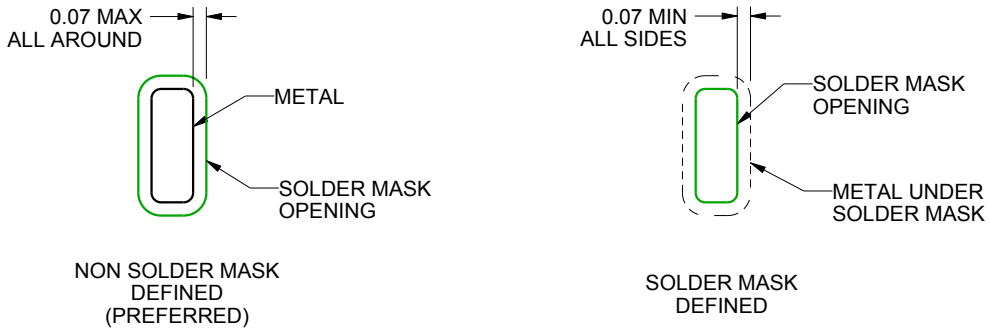

SOLDER MASK DETAILS

4219052/A 06/2016

NOTES: (continued)

4. This package is designed to be soldered to a thermal pad on the board. For more information, see Texas Instruments literature number SLUA271 (www.ti.com/lit/slua271).

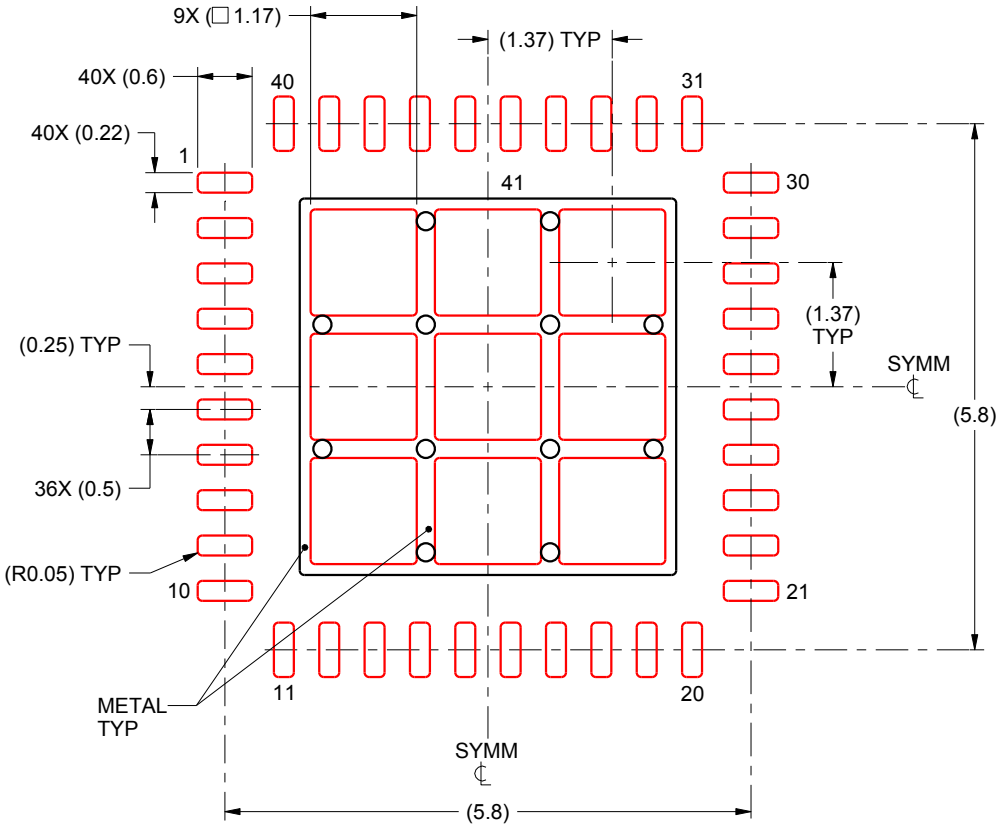

SOLDER PASTE EXAMPLE
BASED ON 0.125 mm THICK STENCIL

EXPOSED PAD 41:
72% PRINTED SOLDER COVERAGE BY AREA UNDER PACKAGE
SCALE:12X

4219052/A 06/2016

NOTES: (continued)

5. Laser cutting apertures with trapezoidal walls and rounded corners may offer better paste release. IPC-7525 may have alternate design recommendations.

GENERIC PACKAGE VIEW

RGZ 48

VQFN - 1 mm max height

7 x 7, 0.5 mm pitch

PLASTIC QUADFLAT PACK- NO LEAD

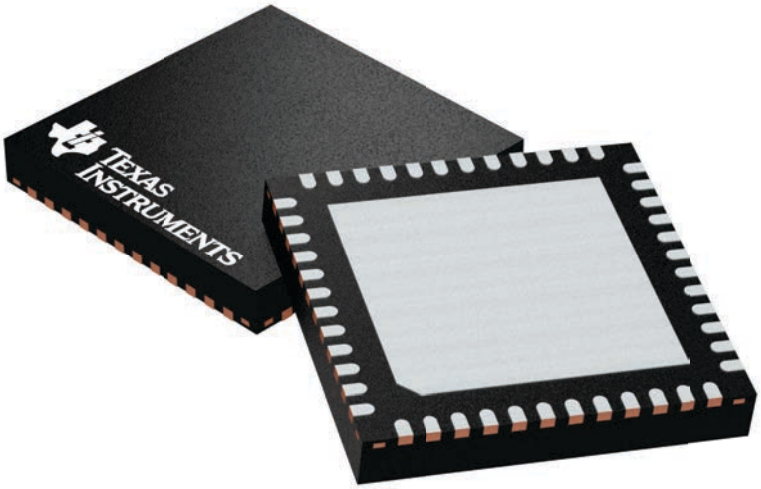

Images above are just a representation of the package family, actual package may vary.
Refer to the product data sheet for package details.

4224671/A

RGZ0048B

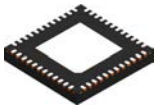

PACKAGE OUTLINE

VQFN - 1 mm max height

PLASTIC QUAD FLATPACK - NO LEAD

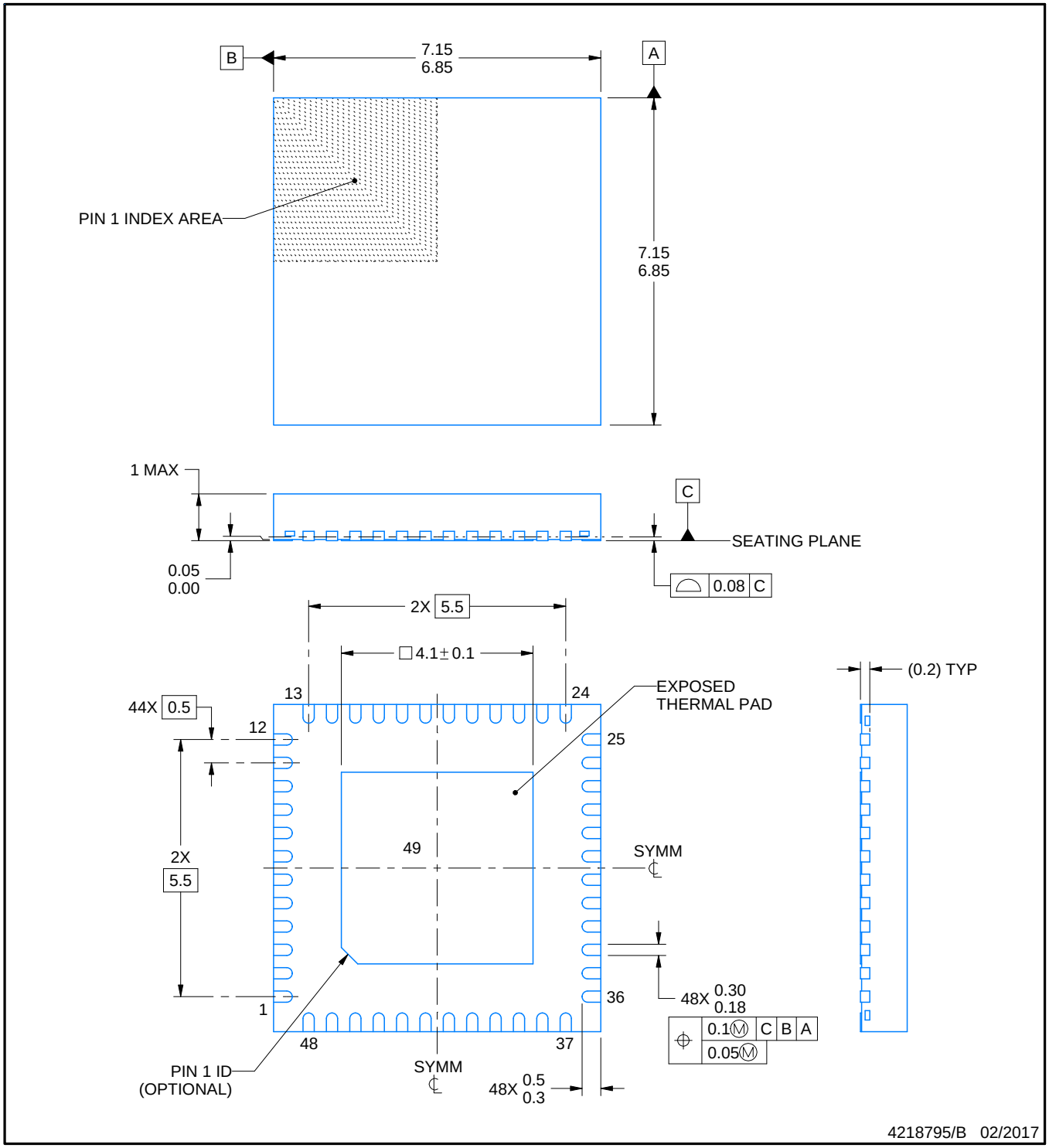

NOTES:

1. All linear dimensions are in millimeters. Any dimensions in parenthesis are for reference only. Dimensioning and tolerancing per ASME Y14.5M.
2. This drawing is subject to change without notice.
3. The package thermal pad must be soldered to the printed circuit board for thermal and mechanical performance.

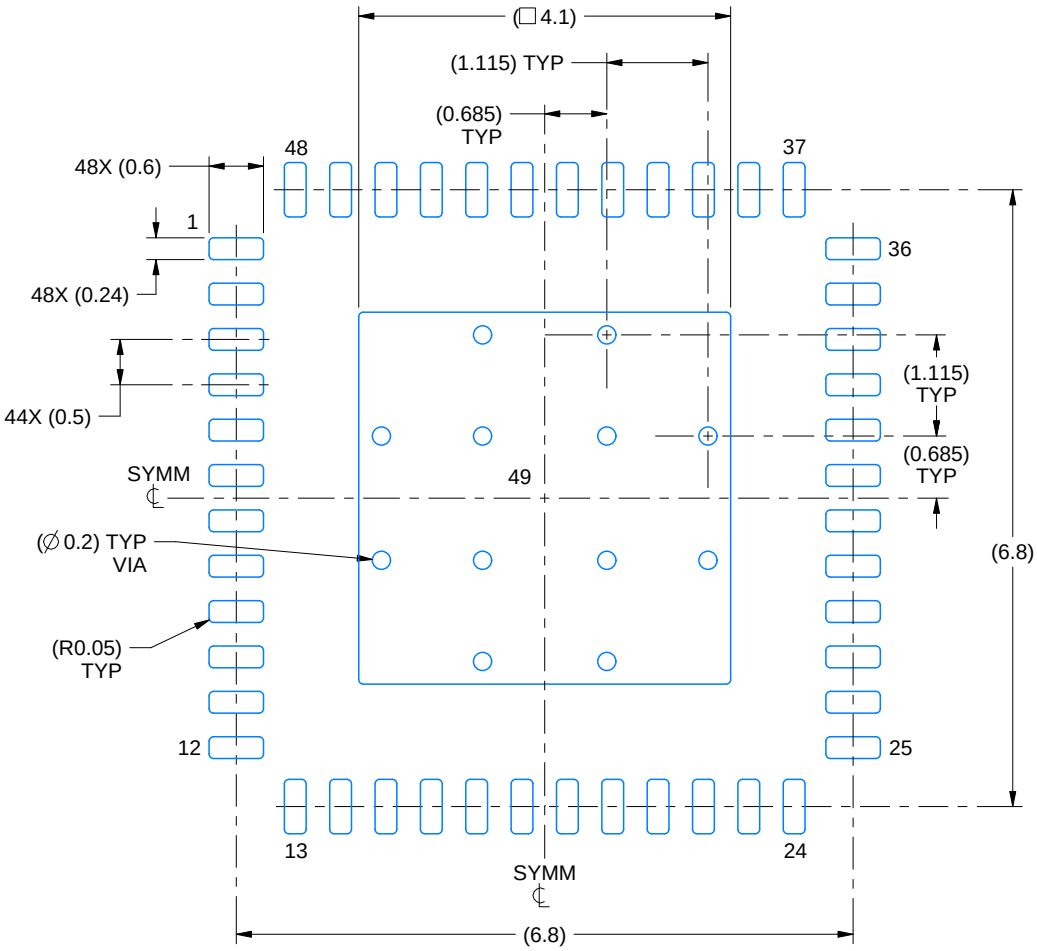

LAND PATTERN EXAMPLE
EXPOSED METAL SHOWN
SCALE:12X

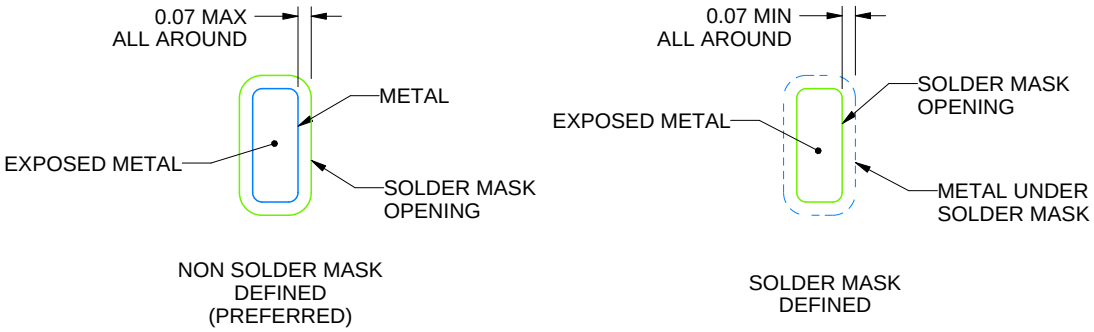

SOLDER MASK DETAILS

4218795/B 02/2017

NOTES: (continued)

4. This package is designed to be soldered to a thermal pad on the board. For more information, see Texas Instruments literature number SLUA271 (www.ti.com/lit/slua271).
5. Vias are optional depending on application, refer to device data sheet. If any vias are implemented, refer to their locations shown on this view. It is recommended that vias under paste be filled, plugged or tented.

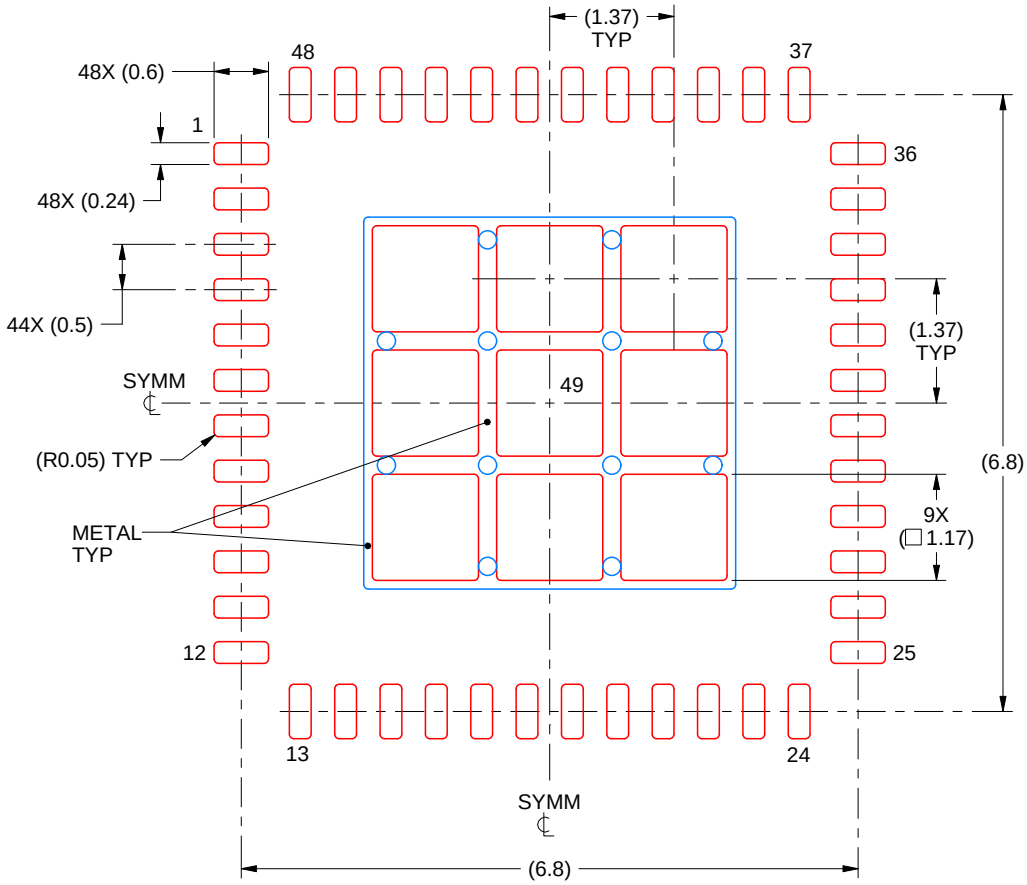

SOLDER PASTE EXAMPLE
BASED ON 0.125 mm THICK STENCIL

EXPOSED PAD 49
73% PRINTED SOLDER COVERAGE BY AREA UNDER PACKAGE
SCALE:12X

4218795/B 02/2017

NOTES: (continued)

6. Laser cutting apertures with trapezoidal walls and rounded corners may offer better paste release. IPC-7525 may have alternate design recommendations.

IMPORTANT NOTICE AND DISCLAIMER

TI PROVIDES TECHNICAL AND RELIABILITY DATA (INCLUDING DATASHEETS), DESIGN RESOURCES (INCLUDING REFERENCE DESIGNS), APPLICATION OR OTHER DESIGN ADVICE, WEB TOOLS, SAFETY INFORMATION, AND OTHER RESOURCES “AS IS” AND WITH ALL FAULTS, AND DISCLAIMS ALL WARRANTIES, EXPRESS AND IMPLIED, INCLUDING WITHOUT LIMITATION ANY IMPLIED WARRANTIES OF MERCHANTABILITY, FITNESS FOR A PARTICULAR PURPOSE OR NON-INFRINGEMENT OF THIRD PARTY INTELLECTUAL PROPERTY RIGHTS.

These resources are intended for skilled developers designing with TI products. You are solely responsible for (1) selecting the appropriate TI products for your application, (2) designing, validating and testing your application, and (3) ensuring your application meets applicable standards, and any other safety, security, regulatory or other requirements.

These resources are subject to change without notice. TI grants you permission to use these resources only for development of an application that uses the TI products described in the resource. Other reproduction and display of these resources is prohibited. No license is granted to any other TI intellectual property right or to any third party intellectual property right. TI disclaims responsibility for, and you fully indemnify TI and its representatives against any claims, damages, costs, losses, and liabilities arising out of your use of these resources.

TI’s products are provided subject to TI’s Terms of Sale, TI’s General Quality Guidelines, or other applicable terms available either on ti.com or provided in conjunction with such TI products. TI’s provision of these resources does not expand or otherwise alter TI’s applicable warranties or warranty disclaimers for TI products. Unless TI explicitly designates a product as custom or customer-specified, TI products are standard, catalog, general purpose devices.

TI objects to and rejects any additional or different terms you may propose.

Copyright © 2026, Texas Instruments Incorporated

Last updated 10/2025