LM34 Precision Fahrenheit Temperature Sensors

1 Features

- Calibrated Directly in Degrees Fahrenheit
- Linear 10.0 mV/°F Scale Factor
- 1.0°F Accuracy Assured (at 77°F)
- Rated for Full −50° to 300°F Range
- Suitable for Remote Applications
- Low Cost Due to Wafer-Level Trimming
- Operates From 5 to 30 Volts
- Less Than 90-µA Current Drain
- Low Self-Heating, 0.18°F in Still Air
- Nonlinearity Only ±0.5°F Typical
- Low-Impedance Output, 0.4 Ω for 1-mA Load

2 Applications

- Power Supplies
- Battery Management
- HVAC
- Appliances

3 Description

The LM34 series devices are precision integrated-circuit temperature sensors, whose output voltage is linearly proportional to the Fahrenheit temperature. The LM34 device has an advantage over linear temperature sensors calibrated in degrees Kelvin, because the user is not required to subtract a large constant voltage from its output to obtain convenient Fahrenheit scaling. The LM34 device does not require any external calibration or trimming to provide typical accuracies of ±1/2°F at room temperature and ±1-1⁄2°F over a full −50°F to 300°F temperature range. Lower cost is assured by trimming and calibration at the wafer level. The low output impedance, linear output, and precise inherent calibration of the LM34 device makes interfacing to readout or control circuitry especially easy. It can be used with single power supplies or with plus and minus supplies. Because the LM34 device draws only 75 µA from its supply, the device has very low self-heating, less than 0.2°F in still air.

The LM34 device is rated to operate over a −50°F to 300°F temperature range, while the LM34C is rated for a −40°F to 230°F range (0°F with improved accuracy). The LM34 devices are series is available packaged in hermetic TO-46 transistor packages; while the LM34C, LM34CA, and LM34D are available in the plastic TO-92 transistor package. The LM34D device is available in an 8-lead, surface-mount, small-outline package. The LM34 device is a complement to the LM35 device (Centigrade) temperature sensor.

Device Information(1)

PART NUMBER	PACKAGE	BODY SIZE (NOM)
LM34	SOIC (8)	4.90 mm × 3.91 mm
	TO-92 (3)	4.30 mm × 4.30 mm
	TO-46 (3)	4.699 mm × 4.699 mm

(1) For all available packages, see the orderable addendum at the end of the data sheet.

Basic Fahrenheit Temperature Sensor (5°F to 300°F)

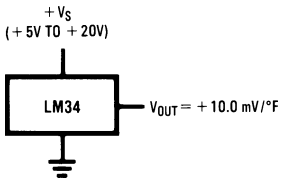

Full-Range Fahrenheit Temperature Sensor

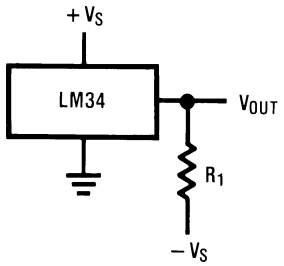

CHOOSE $R_1 = (-V_S)/50\ \mu A$

$V_{OUT} = +3.000$ mV AT $+300$°F

$= +750$ mV AT $+75$°F

$= -500$ mV AT -50°F

An IMPORTANT NOTICE at the end of this data sheet addresses availability, warranty, changes, use in safety-critical applications, intellectual property matters and other important disclaimers. PRODUCTION DATA.

Table of Contents

1 Features ... 1
2 Applications ... 1
3 Description ... 1
4 Revision History ... 2
5 Pin Configuration and Functions ... 3
6 Specifications ... 4
6.1 Absolute Maximum Ratings ... 4
6.2 ESD Ratings ... 4
6.3 Recommended Operating Conditions ... 4
6.4 Thermal Information ... 4
6.5 Electrical Characteristics: LM34A and LM34CA ... 5
6.6 Electrical Characteristics: LM34, LM34C, and LM34D ... 7
6.7 Typical Characteristics ... 9
7 Detailed Description ... 11
7.1 Overview ... 11
7.2 Functional Block Diagram ... 11
7.3 Feature Description ... 11
7.4 Device Functional Modes ... 12
8 Application and Implementation ... 13
8.1 Application Information ... 13
8.2 Typical Application ... 13
8.3 System Examples ... 14
9 Power Supply Recommendations ... 16
10 Layout ... 16
10.1 Layout Guidelines ... 16
10.2 Layout Example ... 17
11 Device and Documentation Support ... 18
11.1 Trademarks ... 18
11.2 Electrostatic Discharge Caution ... 18
11.3 Glossary ... 18
12 Mechanical, Packaging, and Orderable Information ... 18

4 Revision History

Changes from Revision C (January 2015) to Revision D — **Page**

- Changed NDV Package (TO-46) pinout from Top View to Bottom View ... 3

Changes from Revision B (November 2000) to Revision C — **Page**

- Added *ESD Ratings* table, *Feature Description* section, *Device Functional Modes*, *Application and Implementation* section, *Power Supply Recommendations* section, *Layout* section, *Device and Documentation Support* section, and *Mechanical, Packaging, and Orderable Information* section. ... 1

Copyright © 2000–2016, Texas Instruments Incorporated

5 Pin Configuration and Functions

NDV Package
3-Pin TO-46
(Bottom View)

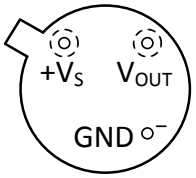

Case is connected to negative pin (GND)

D Package
8-Pin SO8
(Top View)

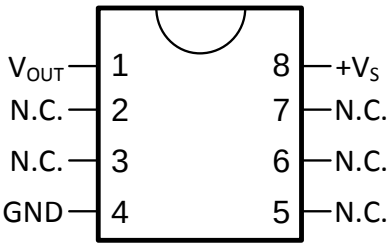

N.C. = No connection

LP Package
3-Pin TO-92
(Bottom View)

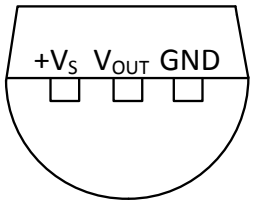

Pin Functions

PIN				TYPE	DESCRIPTION
NAME	TO46/NDV	TO92/LP	SO8/D		
$+V_S$	—	—	8	POWER	Positive power supply pin
V_{OUT}	—	—	1	O	Temperature Sensor Analog Output
GND	—	—	4	GND	Device ground pin, connect to power supply negative terminal
N.C.	—	—	2	—	No Connection
			3		
			5		
			6		
			7		

Copyright © 2000–2016, Texas Instruments Incorporated

6 Specifications

6.1 Absolute Maximum Ratings[1][2]

over operating free-air temperature range (unless otherwise noted)

		MIN	MAX	UNIT
Supply voltage		35	–0.2	V
Output voltage		6	–1	V
Output current			10	mA
Storage temperature, T_{stg}	TO-46 Package	−76	356	°F
	TO-92 Package	−76	300	
	SO-8 Package	−65	150	

(1) Stresses beyond those listed under *Absolute Maximum Ratings* may cause permanent damage to the device. These are stress ratings only, which do not imply functional operation of the device at these or any other conditions beyond those indicated under *Recommended Operating Conditions*. Exposure to absolute-maximum-rated conditions for extended periods may affect device reliability.
(2) If Military/Aerospace specified devices are required, contact the Texas Instruments Sales Office/ Distributors for availability and specifications.

6.2 ESD Ratings

			VALUE	UNIT
$V_{(ESD)}$	Electrostatic discharge	Human-body model (HBM), per ANSI/ESDA/JEDEC JS-001[1]	±2500	V

(1) JEDEC document JEP155 states that 500-V HBM allows safe manufacturing with a standard ESD control process.

6.3 Recommended Operating Conditions

over operating free-air temperature range (unless otherwise noted)

		MIN	MAX	UNIT
Specified operating temperature range ($T_{MIN} \le T_A \le T_{MAX}$)	LM34, LM34A	–50	300	°F
	LM34C, LM34CA	–40	230	
	LM34D	32	212	
Supply Voltage Range ($+V_S$)		4	30	V

6.4 Thermal Information

THERMAL METRIC[1]		LM34			UNIT
		NDV (TO-46)	LP (TO-92)	D (SO8)	
		3 PINS	3 PINS	8 PINS	
$R_{\theta JA}$	Junction-to-ambient thermal resistance	720	324	400	°F/W
$R_{\theta JC}$	Junction-to-case thermal resistance	43	—	—	

(1) For more information about traditional and new thermal metrics, see the *IC Package Thermal Metrics* application report, SPRA953.

Copyright © 2000–2016, Texas Instruments Incorporated

6.5 Electrical Characteristics: LM34A and LM34CA

Unless otherwise noted, these specifications apply: −50°F ≤ T_J ≤ 300°F for the LM34 and LM34A; −40°F ≤ T_J ≤ 230°F for the LM34C and LM34CA; and 32°F ≤ T_J ≤ 212°F for the LM34D. V_S = 5 Vdc and I_{LOAD} = 50 µA in the circuit of *Full-Range Fahrenheit Temperature Sensor*; 6 Vdc for LM34 and LM34A for 230°F ≤ T_J ≤ 300°F. These specifications also apply from 5°F to T_{MAX} in the circuit of *Basic Fahrenheit Temperature Sensor (5°F to 300°F)*.

PARAMETER	TEST CONDITIONS		LM34A			LM34CA			UNIT
			MIN	TYP	MAX	MIN	TYP	MAX	
Accuracy(1)	T_A = 77°F	Tested Limit(2)	–1		1	–1		1	°F
		Design Limit(3)							
				±0.4			±0.4		
	T_A = 0°F	Tested Limit							°F
		Design Limit				–2		2	
				±0.6			±0.6		
	T_A = T_{MAX}	Tested Limit	–2		2	–2		2	°F
		Design Limit							
				±0.8			±0.8		
	T_A = T_{MIN}	Tested Limit	–2		2				°F
		Design Limit				–3		3	
				±0.8			±0.8		
Nonlinearity (4)		Tested Limit							°F
		Design Limit	–0.7		0.7	–0.6		0.6	
	T_A = 77°F			±0.35			±0.3		
Sensor gain (Average Slope)		Tested Limit	9.9		10.1				mV/°F
		Design Limit				+9.9		10.1	
	T_A = 77°F			+10			10		
Load regulation(5)	T_A = 77°F 0 ≤ I_L ≤ 1 mA	Tested Limit	–1		1	–1		1	mV/mA
		Design Limit							
				±0.4			±0.4		
	0 ≤ I_L ≤ 1 mA	Tested Limit							mV/mA
		Design Limit	–3		3	–3		3	
				±0.5			±0.5		
Line regulation(5)	T_A = 77°F 5 V ≤ V_S ≤ 30 V	Tested Limit	–0.05		0.05	–0.05		0.05	mV/V
		Design Limit							
				±0.01			±0.01		
	5 V ≤ V_S ≤ 30 V	Tested Limit							mV/V
		Design Limit	–0.1		0.1	–0.1		0.1	
				±0.02			±0.02		

(1) Accuracy is defined as the error between the output voltage and 10 mV/°F times the device's case temperature at specified conditions of voltage, current, and temperature (expressed in °F).
(2) Tested limits are specified and 100% tested in production.
(3) Design limits are specified (but not 100% production tested) over the indicated temperature and supply voltage ranges. These limits are not used to calculate outgoing quality levels.
(4) Nonlinearity is defined as the deviation of the output-voltage-versus-temperature curve from the best-fit straight line over the rated temperature range of the device.
(5) Regulation is measured at constant junction temperature using pulse testing with a low duty cycle. Changes in output due to heating effects can be computed by multiplying the internal dissipation by the thermal resistance.

Copyright © 2000–2016, Texas Instruments Incorporated

Electrical Characteristics: LM34A and LM34CA (continued)

Unless otherwise noted, these specifications apply: −50°F ≤ T_J ≤ 300°F for the LM34 and LM34A; −40°F ≤ T_J ≤ 230°F for the LM34C and LM34CA; and 32°F ≤ T_J ≤ 212°F for the LM34D. V_S = 5 Vdc and I_{LOAD} = 50 µA in the circuit of *Full-Range Fahrenheit Temperature Sensor*; 6 Vdc for LM34 and LM34A for 230°F ≤ T_J ≤ 300°F. These specifications also apply from 5°F to T_{MAX} in the circuit of *Basic Fahrenheit Temperature Sensor (5°F to 300°F)*.

PARAMETER	TEST CONDITIONS		LM34A			LM34CA			UNIT
			MIN	TYP	MAX	MIN	TYP	MAX	
Quiescent current(6)	V_S = 5 V, T_A = 77°F	Tested Limit			90			90	µA
		Design Limit							
				75		75			
	V_S = 5 V	Tested Limit							µA
		Design Limit			160			139	
				131			116		
	V_S = 30 V, T_A = 77°F	Tested Limit			92			92	µA
		Design Limit							
				76			76		
	V_S = 30 V	Tested Limit							µA
		Design Limit			163			142	
				132			117		
Change of quiescent current(5)	4 V ≤ V_S ≤ 30 V, T_A = 77°F	Tested Limit			2			2	µA
		Design Limit							
				0.5			0.5		
	5 V ≤ V_S ≤ 30 V	Tested Limit							µA
		Design Limit			3			3	
				1			1		
Temperature coefficient of quiescent current		Tested Limit							µA/°F
		Design Limit			0.5			0.5	
				0.3			0.3		
Minimum temperature for rated accuracy	In circuit of *Basic Fahrenheit Temperature Sensor (5°F to 300°F)*, I_L = 0 T_A = 77°F	Tested Limit							°F
		Design Limit			5			5	
				3			3		
Long-term stability	T_J = T_{MAX} for 1000 hours			±0.16			±0.16		°F

(6) Quiescent current is defined in the circuit of *Basic Fahrenheit Temperature Sensor (5°F to 300°F)*.

Copyright © 2000–2016, Texas Instruments Incorporated

6.6 Electrical Characteristics: LM34, LM34C, and LM34D

Unless otherwise noted, these specifications apply: −50°F ≤ T_J ≤ 300°F for the LM34 and LM34A; −40°F ≤ T_J ≤ 230°F for the LM34C and LM34CA; and +32°F ≤ T_J ≤ 212°F for the LM34D. V_S = 5 Vdc and I_{LOAD} = 50 µA in the circuit of *Full-Range Fahrenheit Temperature Sensor*; 6 Vdc for LM34 and LM34A for 230°F ≤ T_J ≤ 300°F. These specifications also apply from 5°F to T_{MAX} in the circuit of *Basic Fahrenheit Temperature Sensor (5°F to 300°F)*.

PARAMETER	CONDITIONS		LM34			LM34C, LM34D			UNIT
			MIN	TYP	MAX	MIN	TYP	MAX	
Accuracy, LM34, LM34C(1)	T_A = 77°F	Tested Limit(2)	–2		2	–2		2	°F
		Design Limit(3)							
				±0.8			±0.8		
	T_A = 0°F	Tested Limit							°F
		Design Limit				–3		3	
				±1			±1		
	T_A = T_{MAX}	Tested Limit	–3		3				°F
		Design Limit				–3		3	
				±1.6			±1.6		
	T_A = T_{MIN}	Tested Limit							°F
		Design Limit	–3		3	–4		4	
				±1.6			±1.6		
Accuracy, LM34D(1)	T_A = 77°F	Tested Limit				–3		3	°F
		Design Limit							
							±1.2		
	T_A = T_{MAX}	Tested Limit							°F
		Design Limit				–4		4	
							±1.8		
	T_A = T_{MIN}	Tested Limit							°F
		Design Limit				–4		4	
							±1.8		
Nonlinearity (4)		Tested Limit							°F
		Design Limit	–1.0		1	–1		1	
				±0.6			±0.4		
Sensor gain (Average Slope)		Tested Limit	9.8		10.2				mV/°F
		Design Limit				9.8		10.2	
				10			10		
Load regulation(5)	T_A = 77°F 0 ≤ I_L ≤ 1 mA	Tested Limit	–2.5		2.5	–2.5		2.5	mV/mA
		Design Limit							
				±0.4			±0.4		
	T_{MIN} ≤ T_A ≤ 150°F 0 ≤ I_L ≤ 1 mA	Tested Limit							mV/mA
		Design Limit	–6.0		6	–6		6	
				±0.5			±0.5		
Line regulation(5)	T_A = 77°F, 5 V ≤ VS ≤ 30 V	Tested Limit	–0.1		0.1	–0.1		0.1	mV/V
		Design Limit							
				±0.01			±0.01		
	5 V ≤ V_S ≤ 30 V	Tested Limit							mV/V
		Design Limit	–0.2		0.2	–0.2		0.2	
				±0.02			±0.02		

(1) Accuracy is defined as the error between the output voltage and 10 mV/˚F times the device's case temperature at specified conditions of voltage, current, and temperature (expressed in ˚F).
(2) Tested limits are specified and 100% tested in production.
(3) Design limits are specified (but not 100% production tested) over the indicated temperature and supply voltage ranges. These limits are not used to calculate outgoing quality levels.
(4) Nonlinearity is defined as the deviation of the output-voltage-versus-temperature curve from the best-fit straight line over the rated temperature range of the device.
(5) Regulation is measured at constant junction temperature using pulse testing with a low duty cycle. Changes in output due to heating effects can be computed by multiplying the internal dissipation by the thermal resistance.

Copyright © 2000–2016, Texas Instruments Incorporated

Electrical Characteristics: LM34, LM34C, and LM34D (continued)

Unless otherwise noted, these specifications apply: −50°F ≤ T_J ≤ 300°F for the LM34 and LM34A; −40°F ≤ T_J ≤ 230°F for the LM34C and LM34CA; and +32°F ≤ T_J ≤ 212°F for the LM34D. V_S = 5 Vdc and I_{LOAD} = 50 µA in the circuit of *Full-Range Fahrenheit Temperature Sensor*; 6 Vdc for LM34 and LM34A for 230°F ≤ T_J ≤ 300°F. These specifications also apply from 5°F to T_{MAX} in the circuit of *Basic Fahrenheit Temperature Sensor (5°F to 300°F)*.

PARAMETER	CONDITIONS		LM34			LM34C, LM34D			UNIT
			MIN	TYP	MAX	MIN	TYP	MAX	
Quiescent current(6)	V_S = 5 V, T_A = 77°F	Tested Limit			100			100	µA
		Design Limit							
				75			75		
	V_S = 5 V	Tested Limit							µA
		Design Limit			176			154	
				131			116		
	V_S = 30 V, T_A = 77°F	Tested Limit			103			103	µA
		Design Limit							
				76			76		
	V_S = 30 V	Tested Limit							µA
		Design Limit			181			159	
				132			117		
Change of quiescent current(5)	4 V ≤ V_S ≤ 30 V, T_A = +77°F	Tested Limit			3			3	µA
		Design Limit							
				0.5			0.5		
	5 V ≤ V_S ≤ 30 V	Tested Limit							µA
		Design Limit			5			5	
				1			1		
Temperature coefficient of quiescent current		Tested Limit							µA/°F
		Design Limit			0.7			0.7	
				0.3			0.3		
Minimum temperature for rated accuracy	In circuit of *Basic Fahrenheit Temperature Sensor (5°F to 300°F)*, I_L = 0	Tested Limit							°F
		Design Limit			5.0			5	
				3			3		
Long-term stability	T_J = T_{MAX} for 1000 hours			±0.16			±0.16		°F

(6) Quiescent current is defined in the circuit of *Basic Fahrenheit Temperature Sensor (5°F to 300°F)*.

Copyright © 2000–2016, Texas Instruments Incorporated

6.7 Typical Characteristics

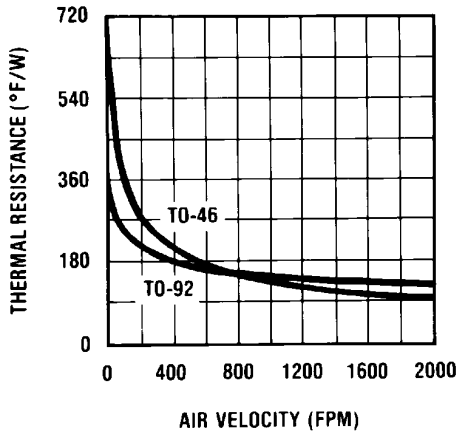

Figure 1. Thermal Resistance Junction to Air

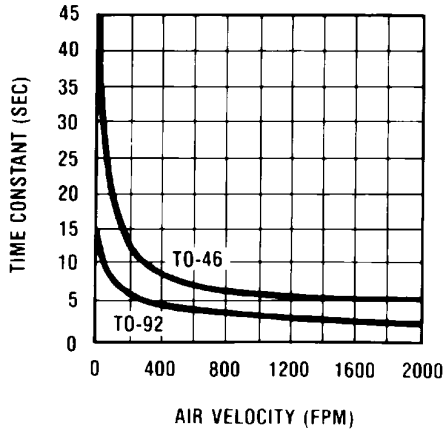

Figure 2. Thermal Time Constant

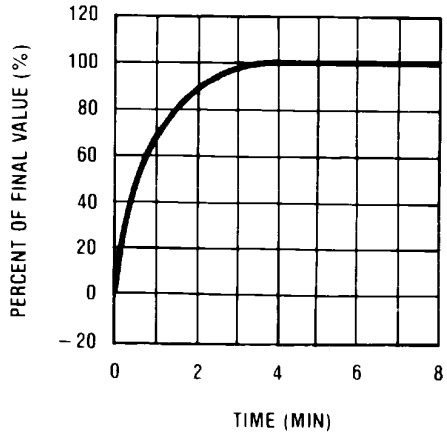

Figure 3. Thermal Response in Still Air

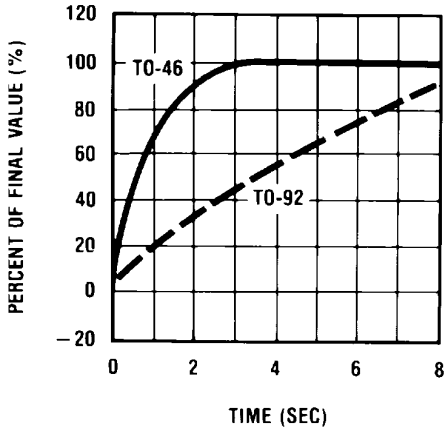

Figure 4. Thermal Response in Stirred Oil Bath

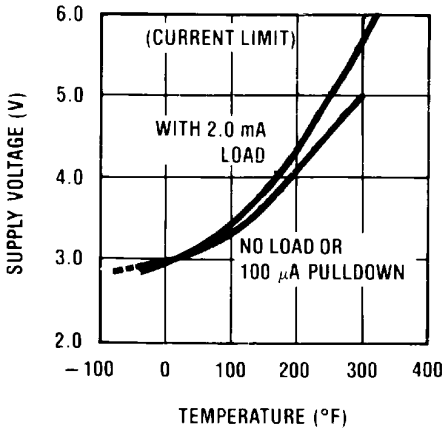

Figure 5. Minimum Supply Voltage vs Temperature

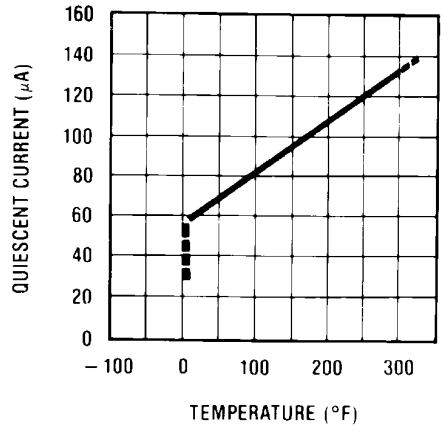

Figure 6. Quiescent Current vs Temperature (in Circuit of *Basic Fahrenheit Temperature Sensor (5°F to 300°F)*)

Typical Characteristics (continued)

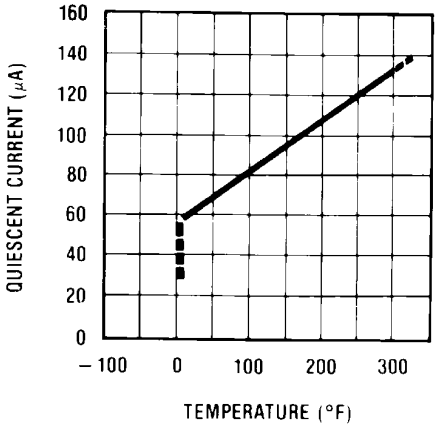

Figure 7. Quiescent Current vs Temperature (in Circuit of *Full-Range Fahrenheit Temperature Sensor*; $-V_S$ = −5V, R1 = 100k)

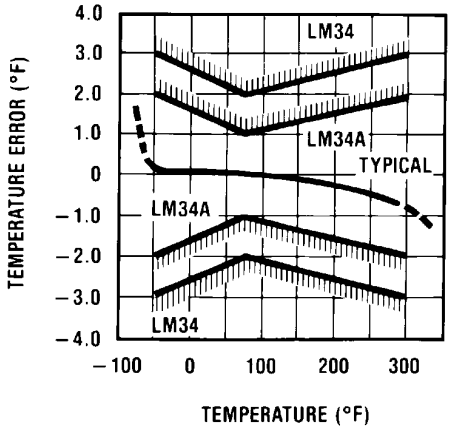

Figure 8. Accuracy vs Temperature (Specified)

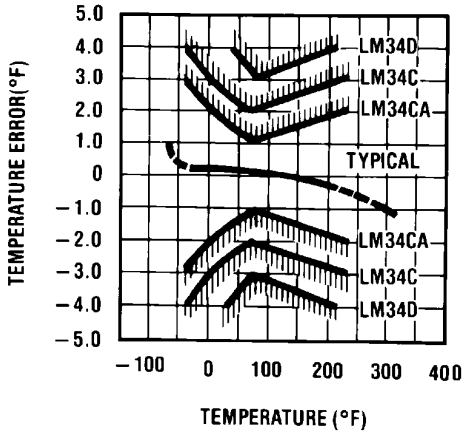

Figure 9. Accuracy vs Temperature (Specified)

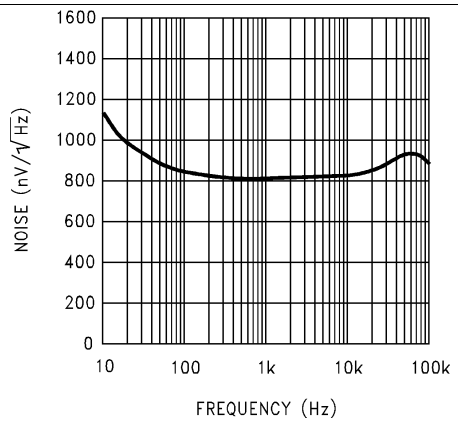

Figure 10. Noise Voltage

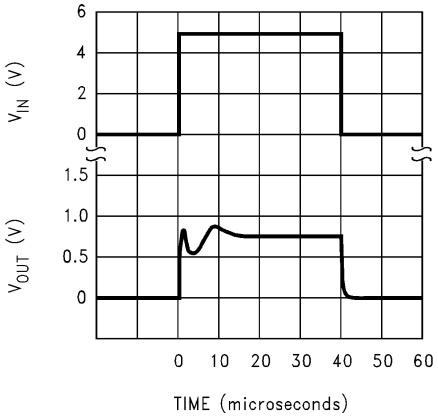

Figure 11. Start-Up Response

Copyright © 2000–2016, Texas Instruments Incorporated

7 Detailed Description

7.1 Overview

The LM34 series devices are precision integrated-circuit temperature sensors, whose output voltage is linearly proportional to the Fahrenheit temperature. The LM34 device has an advantage over linear temperature sensors calibrated in degrees Kelvin, because the user is not required to subtract a large constant voltage from its output to obtain convenient Fahrenheit scaling. The LM34 device does not require any external calibration or trimming to provide typical accuracies of ±1/2°F at room temperature and ±1-1⁄2°F over a full −50°F to 300°F temperature range. Lower cost is assured by trimming and calibration at the wafer level. The low output impedance, linear output, and precise inherent calibration of the LM34 device makes interfacing to readout or control circuitry especially easy. It can be used with single power supplies or with plus and minus supplies. Because the LM34 device draws only 75 µA from its supply, the device has very low self-heating, less than 0.2°F in still air.

The temperature sensing element is comprised of a simple base emitter junction that is forward biased by a current source. The temperature sensing element is buffered by an amplifier and provided to the OUT pin. The amplifier has a simple class-A output stage thus providing a low impedance output that can source 16 µA and sink 1 µA.

The temperature sensing element is comprised of a delta-V_{BE} architecture. The temperature sensing element is then buffered by an amplifier and provided to the V_{OUT} pin. The amplifier has a simple class A output stage with typical 0.5-Ω output impedance as shown in the *Functional Block Diagram*. Therefore, the LM34 device can only source current and the sinking capability of the device is limited to 1 µA.

7.2 Functional Block Diagram

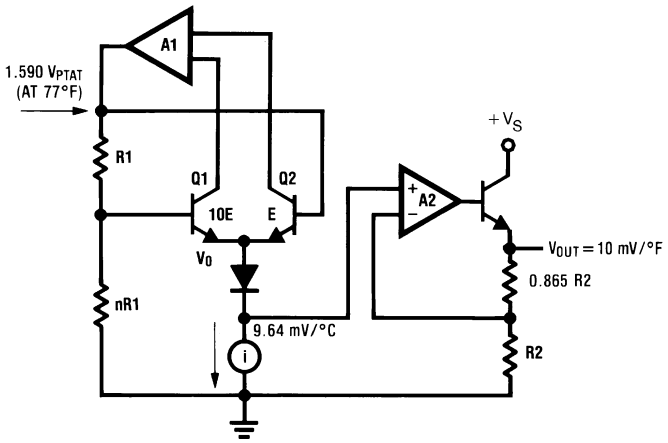

7.3 Feature Description

7.3.1 Capacitive Drive Capability

Like most micropower circuits, the LM34 device has a limited ability to drive heavy capacitive loads. The LM34 device, by itself, is able to drive 50 pF without special precautions. If heavier loads are anticipated, it is easy to isolate or decouple the load with a resistor; see Figure 12. You can improve the tolerance of capacitance with a series R-C damper from output to ground; see Figure 13. When the LM34 is applied with a 499-Ω load resistor (as shown Figure 18 and Figure 19), the device is relatively immune to wiring capacitance because the capacitance forms a bypass from ground to input, not on the output. However, as with any linear circuit connected to wires in a hostile environment, its performance can be affected adversely by intense electromagnetic sources such as relays, radio transmitters, motors with arcing brushes, transients of the SCR, and so on, as the wiring of the device can act as a receiving antenna and the internal junctions can act as rectifiers. For best results in such cases, a bypass capacitor from VIN to ground and a series R-C damper, such as 75 Ω in series with 0.2 µF or 1 µF from output to ground, are often useful. See Figure 23, Figure 24 and Figure 26 for more details.

Copyright © 2000–2016, Texas Instruments Incorporated

Feature Description (continued)

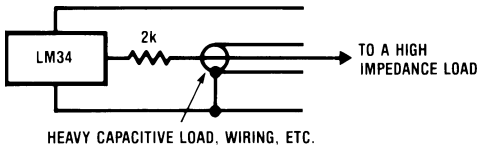

Figure 12. LM34 With Decoupling from Capacitive Load

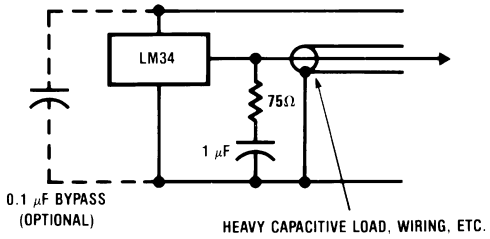

Figure 13. LM34 With R-C Damper

7.3.2 LM34 Transfer Function

The accuracy specifications of the LM34 devices are given with respect to a simple linear transfer function shown in Equation 1:

VOUT = 10 mV/°F × T °F

where

- V_{OUT} is the LM34 output voltage
- T is the temperature in °F

(1)

7.4 Device Functional Modes

The only functional mode of the LM34 device is that it has an analog output directly proportional to temperature.

Copyright © 2000–2016, Texas Instruments Incorporated

8 Application and Implementation

NOTE

Information in the following applications sections is not part of the TI component specification, and TI does not warrant its accuracy or completeness. TI's customers are responsible for determining suitability of components for their purposes. Customers should validate and test their design implementation to confirm system functionality.

8.1 Application Information

The features of the LM34 device make it suitable for many general temperature sensing applications. Multiple package options expand on flexibility of the device.

8.2 Typical Application

8.2.1 Basic Fahrenheit Temperature Sensor Application

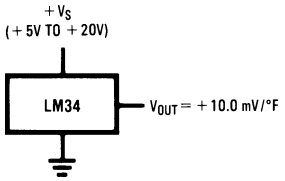

Figure 14. Basic Fahrenheit Temperature Sensor (5°F to 300°F)

8.2.1.1 Design Requirements

Table 1. Key Requirements

PARAMETER	VALUE
Accuracy at 77°F	±2°F
Accuracy from –50°F to 300°F	±3°F
Temperature Slope	10 mV/°F

8.2.1.2 Detailed Design Procedure

Because the LM34 is a simple temperature sensor that provides an analog output, design requirements related to layout are more important than electrical requirements (see *Layout*).

8.2.1.3 Application Curve

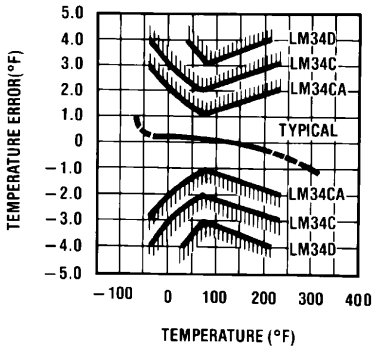

Figure 15. Temperature Error

8.3 System Examples

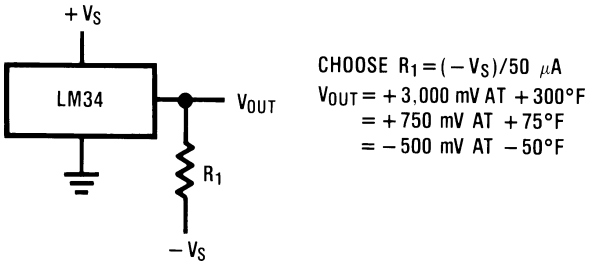

Figure 16. Full-Range Fahrenheit Temperature Sensor

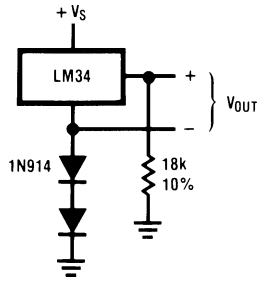

Figure 17. Full Range Farenheit Sensor (–50 °F to 300 °F)

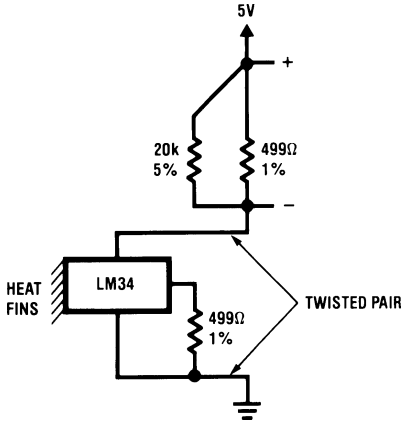

Figure 18. Two-Wire Remote Temperature Sensor (Grounded Sensor)

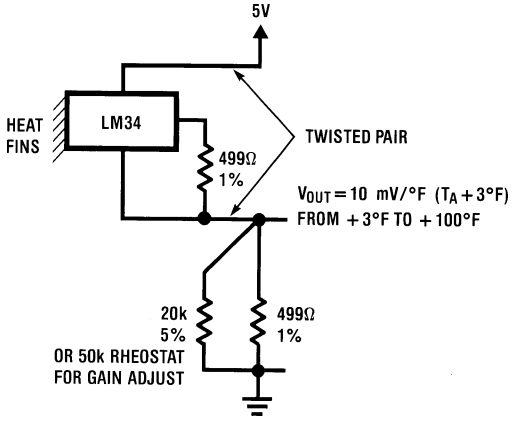

Figure 19. Two-Wire Remote Temperature Sensor (Output Referred to Ground)

V_{OUT} = 10 mV/°F (T_A+3°F) from 3°F to 100°F

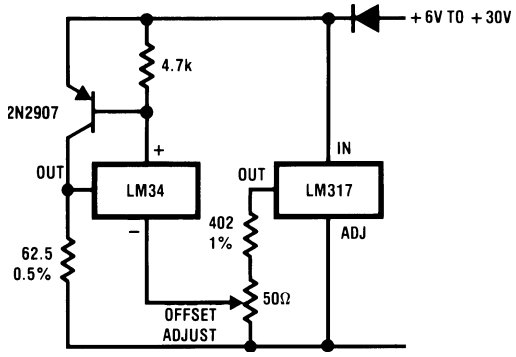

Figure 20. 4- to -20 mA Current Source (0°F to 100°F)

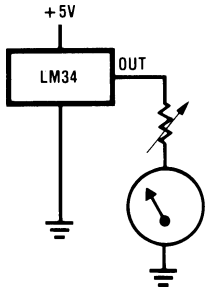

Figure 21. Fahrenheit Thermometer (Analog Meter)

Copyright © 2000–2016, Texas Instruments Incorporated

System Examples (continued)

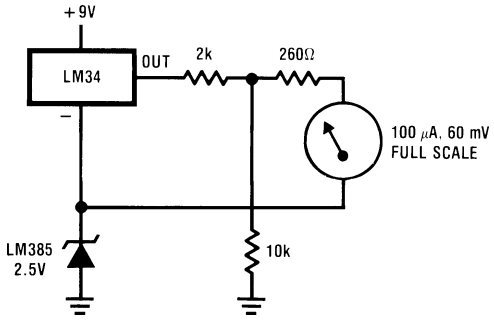

Figure 22. Expanded Scale Thermometer (50°F to 80°F, for Example Shown)

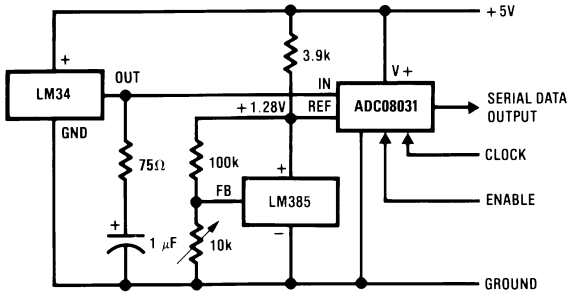

Figure 23. Temperature-to-Digital Converter (Serial Output, 128°F Full Scale)

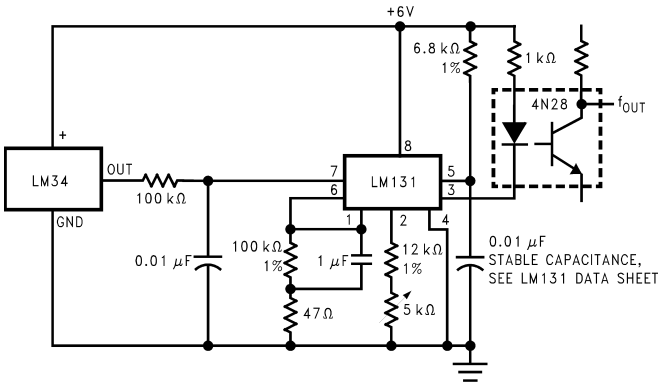

Figure 24. LM34 With Voltage-to-Frequency Converter and Isolated Output (3°F to 300°F; 30 Hz to 3000 Hz)

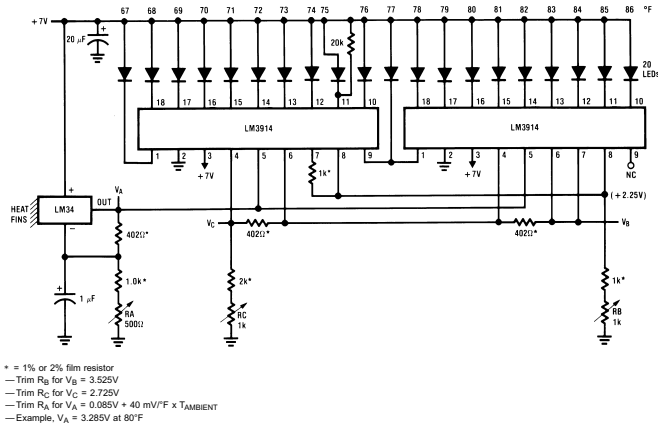

Figure 25. Bar-Graph Temperature Display (Dot Mode)

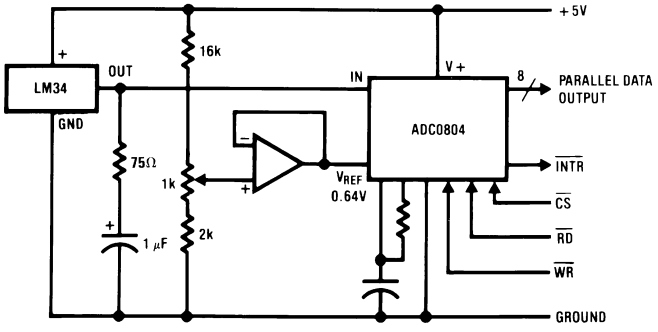

Figure 26. Temperature-to-Digital Converter (Parallel TRI-STATE Outputs for Standard Data Bus to μP Interface, 128°F Full Scale)

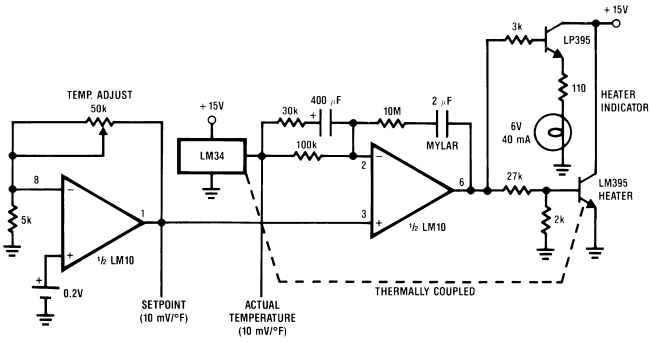

Figure 27. Temperature Controller

9 Power Supply Recommendations

It may be necessary to add a bypass filter capacitor in noisy environments, as shown in as shown in Figure 13.

10 Layout

10.1 Layout Guidelines

The LM34 device can be easily applied in the same way as other integrated-circuit temperature sensors. The device can be glued or cemented to a surface and its temperature will be within about 0.02°F of the surface temperature. This presumes that the ambient air temperature is almost the same as the surface temperature; if the air temperature were much higher or lower than the surface temperature, the actual temperature of the LM34 die would be at an intermediate temperature between the surface temperature and the air temperature. This is especially true for the TO-92 plastic package, where the copper leads are the principal thermal path to carry heat into the device, so its temperature might be closer to the air temperature than to the surface temperature.

To minimize this problem, be sure that the wiring to the LM34, as it leaves the device, is held at the same temperature as the surface of interest. The easiest way to do this is to cover up these wires with a bead of epoxy, which will insure that the leads and wires are all at the same temperature as the surface, and that the die temperature of the LM34 device will not be affected by the air temperature.

The TO-46 metal package can be soldered to a metal surface or pipe without damage. In the case where soldering is used, the V− terminal of the circuit will be grounded to that metal. Alternatively, the LM34 device can be mounted inside a sealed-end metal tube, and can then be dipped into a bath or screwed into a threaded hole in a tank. As with any IC, the LM34 and accompanying wiring and circuits must be kept insulated and dry, to avoid leakage and corrosion. This is especially true if the circuit may operate at cold temperatures where condensation can occur. Printed-circuit coatings and varnishes such as a conformal coating and epoxy paints or dips are often used to insure that moisture cannot corrode the LM34 or its connections.

These devices are sometimes soldered to a small, light-weight heat fin to decrease the thermal time constant and speed up the response in slowly-moving air. On the other hand, a small thermal mass may be added to the sensor to give the steadiest reading despite small deviations in the air temperature.

Table 2. Temperature Rise of LM34 Due to Self-Heating (Thermal Resistance)

CONDITIONS	TO-46 NO HEAT SINK	TO-46, SMALL HEAT Fin(1)	TO-92, NO HEAT SINK	TO-92, SMALL HEAT Fin(2)	SO-8 NO HEAT SINK	SO-8 SMALL HEAT Fin
Still air	720°F/W	180°F/W	324°F/W	252°F/W	400°F/W	200°F/W
Moving air	180°F/W	72°F/W	162°F/W	126°F/W	190°F/W	160°F/W
Still oil	180°F/W	72°F/W	162°F/W	126°F/W	—	—
Stirred oil	90°F/W	54°F/W	81°F/W	72°F/W	—	—
(Clamped to metal, infinite heart sink)	(43°F/W)		—	—	(95°F/W)	

(1) Wakefield type 201 or 1-inch disc of 0.020-inch sheet brass, soldered to case, or similar.
(2) TO-92 and SO-8 packages glued and leads soldered to 1-inch square of 1/16 inches printed circuit board with 2 oz copper foil, or similar.

Copyright © 2000–2016, Texas Instruments Incorporated

10.2 Layout Example

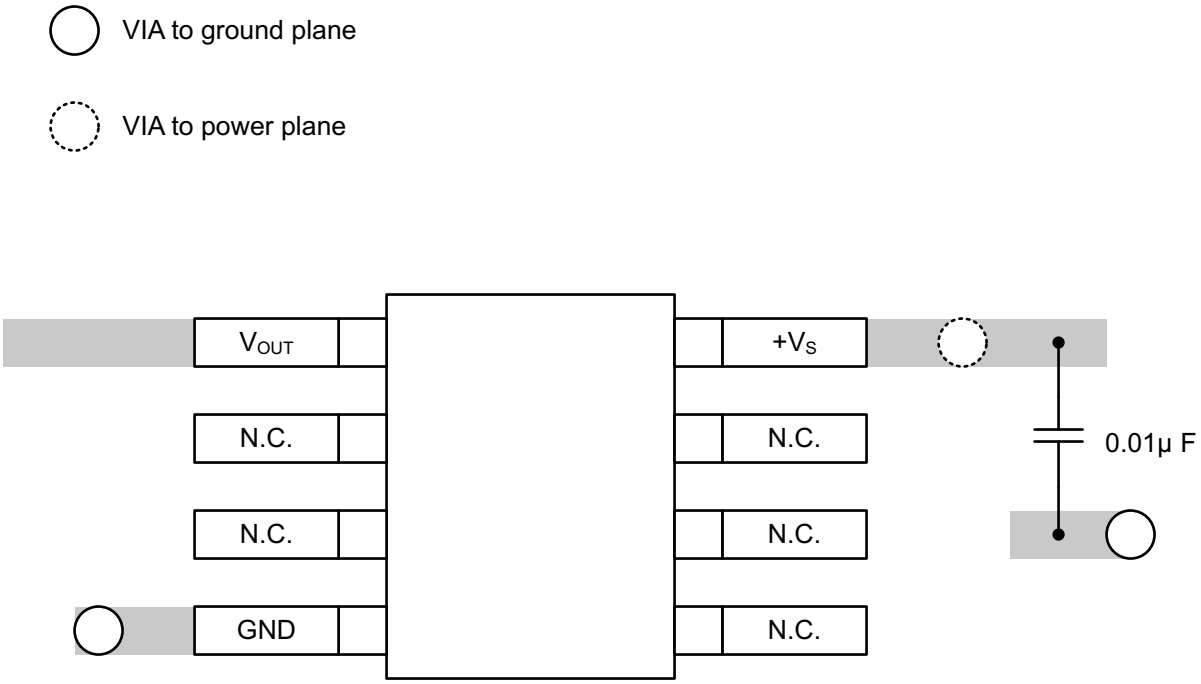

Figure 28. Layout Example

11 Device and Documentation Support

11.1 Trademarks

All trademarks are the property of their respective owners.

11.2 Electrostatic Discharge Caution



These devices have limited built-in ESD protection. The leads should be shorted together or the device placed in conductive foam during storage or handling to prevent electrostatic damage to the MOS gates.

11.3 Glossary

SLYZ022 — *TI Glossary*.

This glossary lists and explains terms, acronyms, and definitions.

12 Mechanical, Packaging, and Orderable Information

The following pages include mechanical, packaging, and orderable information. This information is the most current data available for the designated devices. This data is subject to change without notice and revision of this document. For browser-based versions of this data sheet, refer to the left-hand navigation.

Copyright © 2000–2016, Texas Instruments Incorporated

PACKAGING INFORMATION

Orderable part number	Status (1)	Material type (2)	Package | Pins	Package qty | Carrier	RoHS (3)	Lead finish/ Ball material (4)	MSL rating/ Peak reflow (5)	Op temp (°C)	Part marking (6)
LM34AH	Active	Production	TO (NDV) | 3	500 | OTHER	No	Call TI	Level-1-NA-UNLIM	-45 to 148	(LM34AH, LM34AH)
LM34AH.B	Active	Production	TO (NDV) | 3	500 | OTHER	No	Call TI	Level-1-NA-UNLIM	See LM34AH	(LM34AH, LM34AH)
LM34AH/NOPB	Active	Production	TO (NDV) | 3	500 | SMALL T&R	Yes	Call TI	Level-1-NA-UNLIM	-45 to 148	(LM34AH, LM34AH)
LM34AH/NOPB.B	Active	Production	TO (NDV) | 3	500 | SMALL T&R	Yes	Call TI	Level-1-NA-UNLIM	See LM34AH/NOPB	(LM34AH, LM34AH)
LM34CAH	Active	Production	TO (NDV) | 3	500 | SMALL T&R	No	Call TI	Level-1-NA-UNLIM	-40 to 110	(LM34CAH, LM34CAH)
LM34CAH.B	Active	Production	TO (NDV) | 3	500 | SMALL T&R	No	Call TI	Level-1-NA-UNLIM	See LM34CAH	(LM34CAH, LM34CAH)
LM34CAH/NOPB	Active	Production	TO (NDV) | 3	500 | OTHER	Yes	Call TI	Level-1-NA-UNLIM	-40 to 110	(LM34CAH, LM34CAH)
LM34CAH/NOPB.B	Active	Production	TO (NDV) | 3	500 | OTHER	Yes	Call TI	Level-1-NA-UNLIM	See LM34CAH/NOPB	(LM34CAH, LM34CAH)
LM34CAZ/NOPB	Active	Production	TO-92 (LP) | 3	1800 | BULK	Yes	SN	N/A for Pkg Type	-40 to 110	LM34 CAZ
LM34CAZ/NOPB.B	Active	Production	TO-92 (LP) | 3	1800 | BULK	Yes	SN	N/A for Pkg Type	See LM34CAZ/NOPB	LM34 CAZ
LM34CZ/NOPB	Active	Production	TO-92 (LP) | 3	1800 | BULK	Yes	SN	N/A for Pkg Type	-40 to 110	LM34 CZ
LM34CZ/NOPB.B	Active	Production	TO-92 (LP) | 3	1800 | BULK	Yes	SN	N/A for Pkg Type	See LM34CZ/NOPB	LM34 CZ
LM34DH	Active	Production	TO (NDV) | 3	1000 | SMALL T&R	No	Call TI	Level-1-NA-UNLIM	0 to 100	(LM34DH, LM34DH)
LM34DH.B	Active	Production	TO (NDV) | 3	1000 | SMALL T&R	No	Call TI	Level-1-NA-UNLIM	See LM34DH	(LM34DH, LM34DH)
LM34DH/NOPB	Active	Production	TO (NDV) | 3	1000 | SMALL T&R	Yes	Call TI	Level-1-NA-UNLIM	0 to 100	(LM34DH, LM34DH)
LM34DH/NOPB.B	Active	Production	TO (NDV) | 3	1000 | SMALL T&R	Yes	Call TI	Level-1-NA-UNLIM	See LM34DH/NOPB	(LM34DH, LM34DH)
LM34DM	NRND	Production	SOIC (D) | 8	95 | TUBE	No	SNPB	Level-1-235C-UNLIM	0 to 100	LM34D M
LM34DM.B	NRND	Production	SOIC (D) | 8	95 | TUBE	No	SNPB	Level-1-235C-UNLIM	See LM34DM	LM34D M
LM34DM/NOPB	Obsolete	Production	SOIC (D) | 8	-	-	Call TI	Call TI	0 to 100	LM34D M
LM34DMX/NOPB	Active	Production	SOIC (D) | 8	2500 | LARGE T&R	Yes	SN	Level-1-260C-UNLIM	0 to 100	LM34D M

Orderable part number	Status (1)	Material type (2)	Package | Pins	Package qty | Carrier	RoHS (3)	Lead finish/ Ball material (4)	MSL rating/ Peak reflow (5)	Op temp (°C)	Part marking (6)
LM34DMX/NOPB.B	Active	Production	SOIC (D) | 8	2500 | LARGE T&R	Yes	SN	Level-1-260C-UNLIM	See LM34DMX/NOPB	LM34D M
LM34DZ/LFT7	Active	Production	TO-92 (LP) | 3	2000 | LARGE T&R	Yes	SN	N/A for Pkg Type	-	LM34 DZ
LM34DZ/LFT7.B	Active	Production	TO-92 (LP) | 3	2000 | LARGE T&R	Yes	SN	N/A for Pkg Type	See LM34DZ/LFT7	LM34 DZ
LM34DZ/NOPB	Active	Production	TO-92 (LP) | 3	1800 | BULK	Yes	SN	N/A for Pkg Type	0 to 100	LM34 DZ
LM34DZ/NOPB.B	Active	Production	TO-92 (LP) | 3	1800 | BULK	Yes	SN	N/A for Pkg Type	See LM34DZ/NOPB	LM34 DZ

(1) **Status:** For more details on status, see our product life cycle.

(2) **Material type:** When designated, preproduction parts are prototypes/experimental devices, and are not yet approved or released for full production. Testing and final process, including without limitation quality assurance, reliability performance testing, and/or process qualification, may not yet be complete, and this item is subject to further changes or possible discontinuation. If available for ordering, purchases will be subject to an additional waiver at checkout, and are intended for early internal evaluation purposes only. These items are sold without warranties of any kind.

(3) **RoHS values:** Yes, No, RoHS Exempt. See the TI RoHS Statement for additional information and value definition.

(4) **Lead finish/Ball material:** Parts may have multiple material finish options. Finish options are separated by a vertical ruled line. Lead finish/Ball material values may wrap to two lines if the finish value exceeds the maximum column width.

(5) **MSL rating/Peak reflow:** The moisture sensitivity level ratings and peak solder (reflow) temperatures. In the event that a part has multiple moisture sensitivity ratings, only the lowest level per JEDEC standards is shown. Refer to the shipping label for the actual reflow temperature that will be used to mount the part to the printed circuit board.

(6) **Part marking:** There may be an additional marking, which relates to the logo, the lot trace code information, or the environmental category of the part.

Multiple part markings will be inside parentheses. Only one part marking contained in parentheses and separated by a "~" will appear on a part. If a line is indented then it is a continuation of the previous line and the two combined represent the entire part marking for that device.

Important Information and Disclaimer: The information provided on this page represents TI's knowledge and belief as of the date that it is provided. TI bases its knowledge and belief on information provided by third parties, and makes no representation or warranty as to the accuracy of such information. Efforts are underway to better integrate information from third parties. TI has taken and continues to take reasonable steps to provide representative and accurate information but may not have conducted destructive testing or chemical analysis on incoming materials and chemicals. TI and TI suppliers consider certain information to be proprietary, and thus CAS numbers and other limited information may not be available for release.

In no event shall TI's liability arising out of such information exceed the total purchase price of the TI part(s) at issue in this document sold by TI to Customer on an annual basis.

TAPE AND REEL INFORMATION

REEL DIMENSIONS

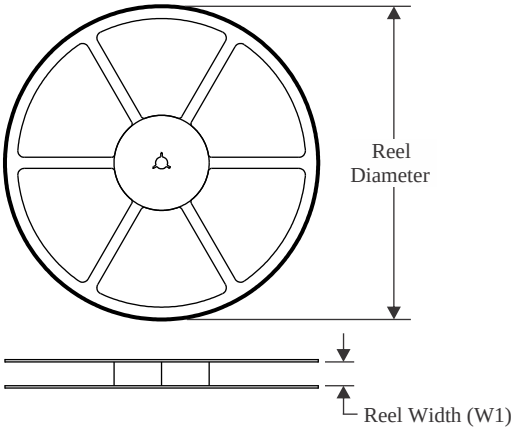

TAPE DIMENSIONS

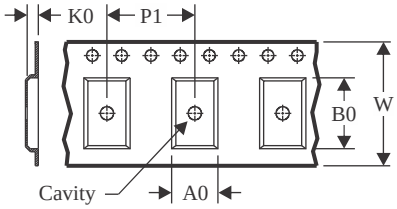

A0	Dimension designed to accommodate the component width
B0	Dimension designed to accommodate the component length
K0	Dimension designed to accommodate the component thickness
W	Overall width of the carrier tape
P1	Pitch between successive cavity centers

QUADRANT ASSIGNMENTS FOR PIN 1 ORIENTATION IN TAPE

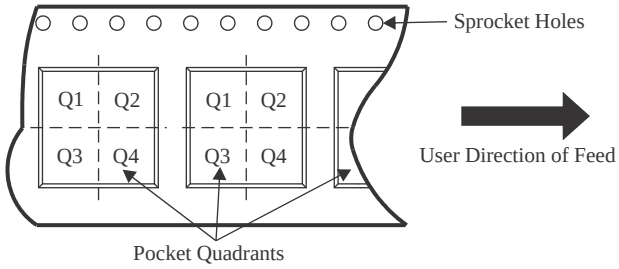

*All dimensions are nominal

Device	Package Type	Package Drawing	Pins	SPQ	Reel Diameter (mm)	Reel Width W1 (mm)	A0 (mm)	B0 (mm)	K0 (mm)	P1 (mm)	W (mm)	Pin1 Quadrant
LM34DMX/NOPB	SOIC	D	8	2500	330.0	12.4	6.4	5.2	2.1	8.0	12.0	Q1

TAPE AND REEL BOX DIMENSIONS

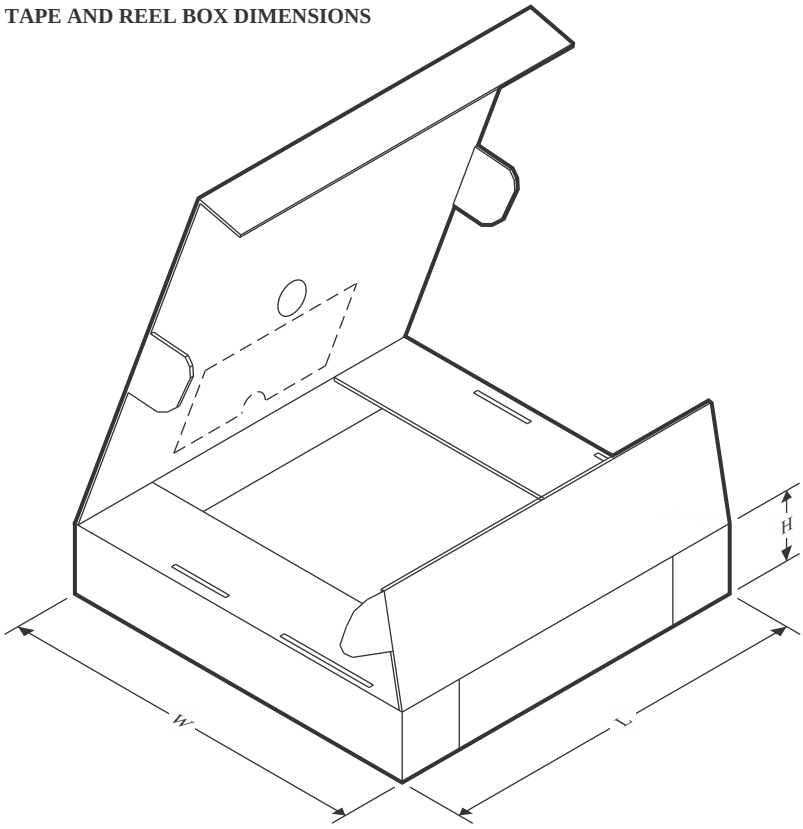

*All dimensions are nominal

Device	Package Type	Package Drawing	Pins	SPQ	Length (mm)	Width (mm)	Height (mm)
LM34DMX/NOPB	SOIC	D	8	2500	367.0	367.0	35.0

TUBE

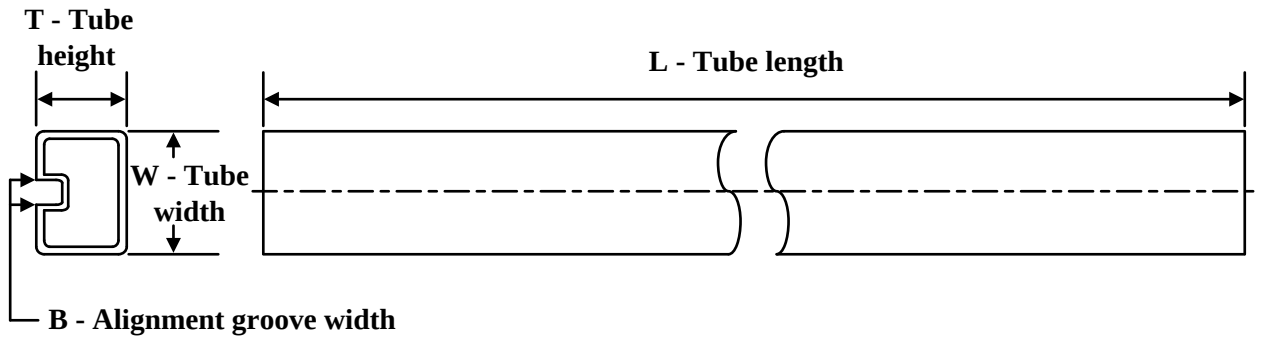

*All dimensions are nominal

Device	Package Name	Package Type	Pins	SPQ	L (mm)	W (mm)	T (µm)	B (mm)
LM34DM	D	SOIC	8	95	495	8	4064	3.05
LM34DM	D	SOIC	8	95	495	8	4064	3.05
LM34DM.B	D	SOIC	8	95	495	8	4064	3.05
LM34DM.B	D	SOIC	8	95	495	8	4064	3.05

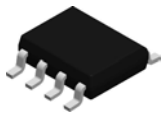

PACKAGE OUTLINE

D0008A

SOIC - 1.75 mm max height

SMALL OUTLINE INTEGRATED CIRCUIT

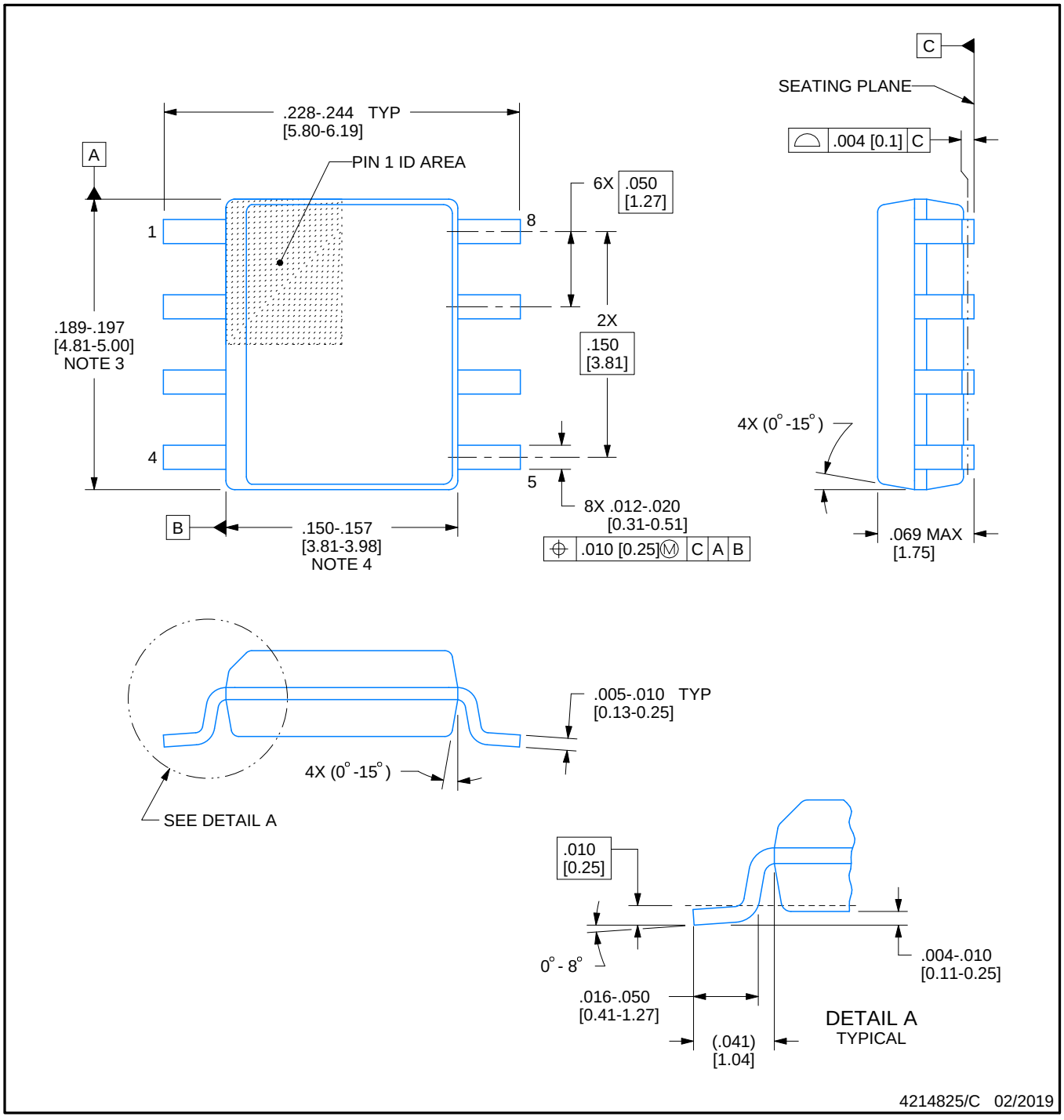

NOTES:

1. Linear dimensions are in inches [millimeters]. Dimensions in parenthesis are for reference only. Controlling dimensions are in inches. Dimensioning and tolerancing per ASME Y14.5M.
2. This drawing is subject to change without notice.
3. This dimension does not include mold flash, protrusions, or gate burrs. Mold flash, protrusions, or gate burrs shall not exceed .006 [0.15] per side.
4. This dimension does not include interlead flash.
5. Reference JEDEC registration MS-012, variation AA.

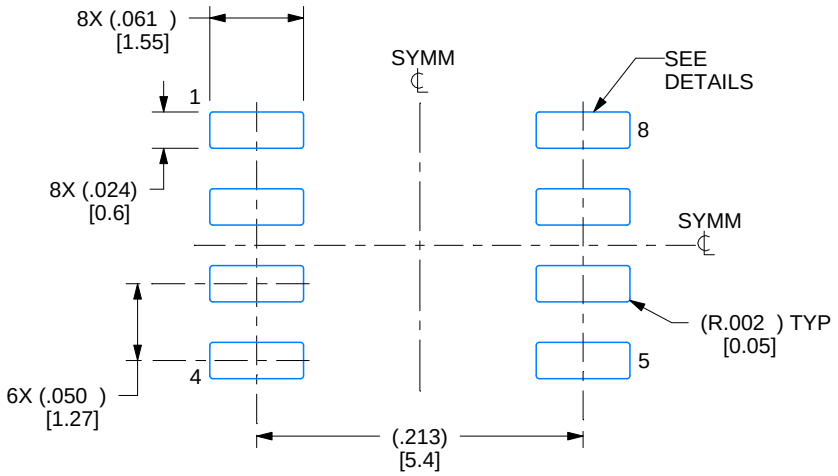

LAND PATTERN EXAMPLE
EXPOSED METAL SHOWN
SCALE:8X

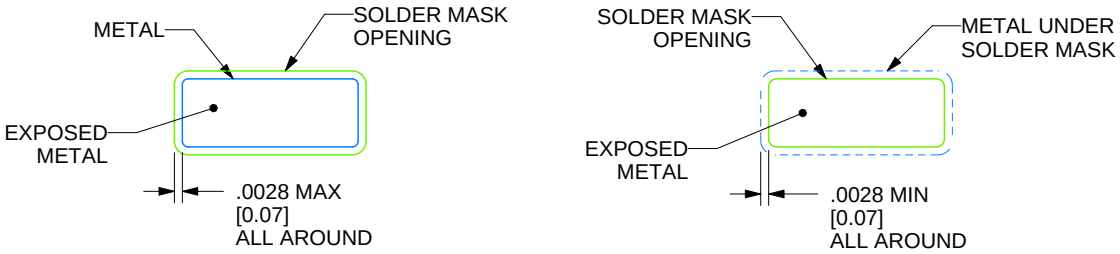

SOLDER MASK DETAILS

4214825/C 02/2019

NOTES: (continued)

6. Publication IPC-7351 may have alternate designs.
7. Solder mask tolerances between and around signal pads can vary based on board fabrication site.

EXAMPLE STENCIL DESIGN

D0008A

SOIC - 1.75 mm max height

SMALL OUTLINE INTEGRATED CIRCUIT

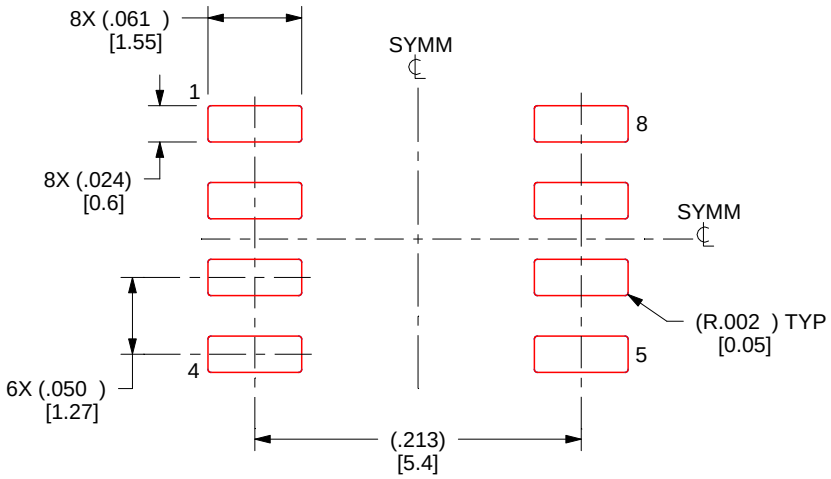

SOLDER PASTE EXAMPLE
BASED ON .005 INCH [0.125 MM] THICK STENCIL
SCALE:8X

4214825/C 02/2019

NOTES: (continued)

8. Laser cutting apertures with trapezoidal walls and rounded corners may offer better paste release. IPC-7525 may have alternate design recommendations.
9. Board assembly site may have different recommendations for stencil design.

LP0003A



PACKAGE OUTLINE

TO-92 - 5.34 mm max height

TO-92

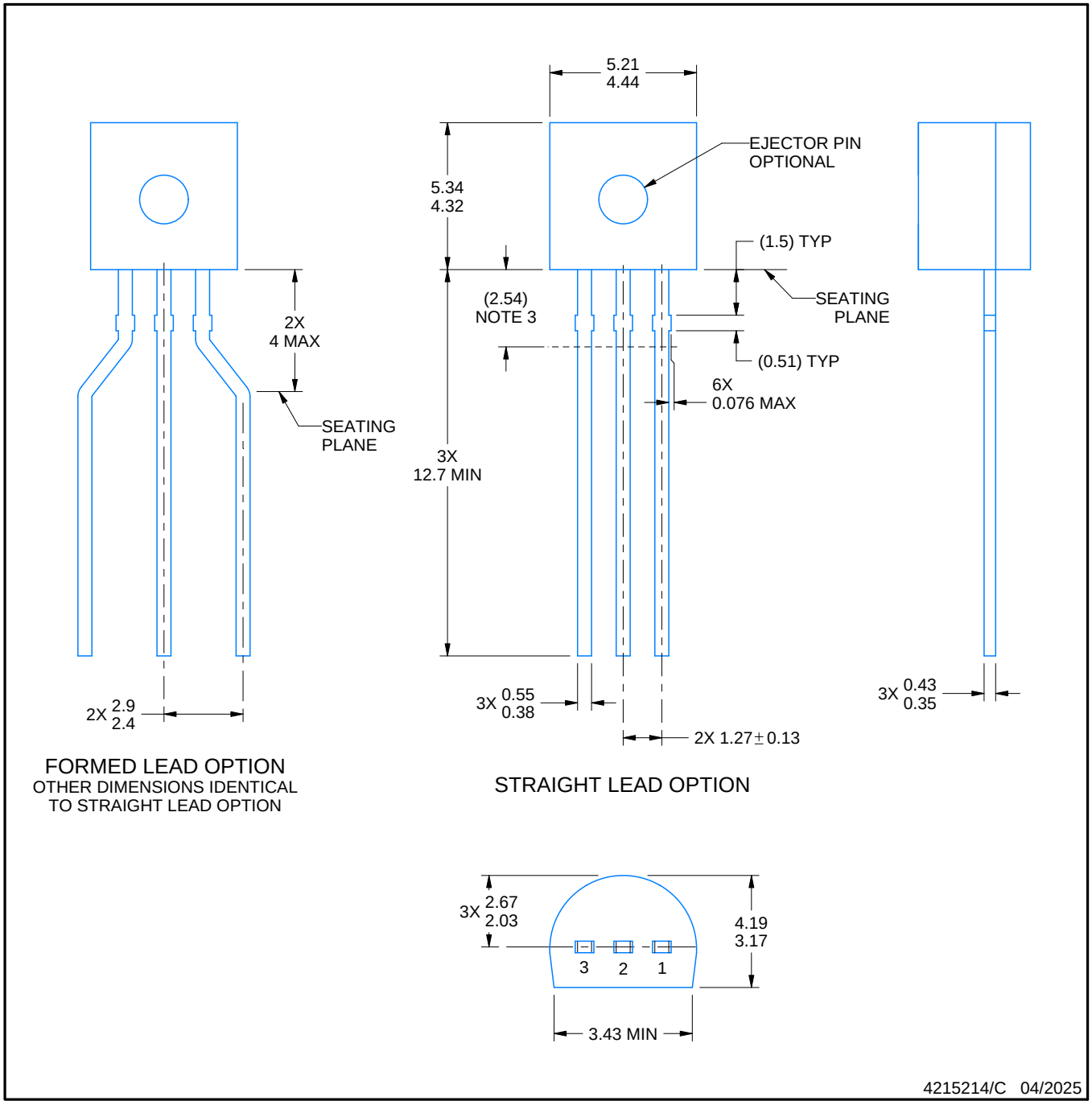

NOTES:

1. All linear dimensions are in millimeters. Any dimensions in parenthesis are for reference only. Dimensioning and tolerancing per ASME Y14.5M.
2. This drawing is subject to change without notice.
3. Lead dimensions are not controlled within this area.
4. Reference JEDEC TO-226, variation AA.
5. Shipping method:
   a. Straight lead option available in bulk pack only.
   b. Formed lead option available in tape and reel or ammo pack.
   c. Specific products can be offered in limited combinations of shipping medium and lead options.
   d. Consult product folder for more information on available options.

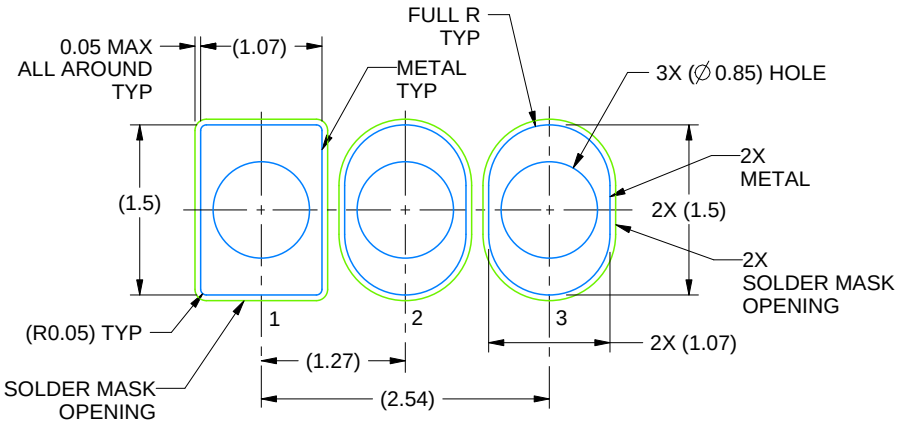

LAND PATTERN EXAMPLE
STRAIGHT LEAD OPTION
NON-SOLDER MASK DEFINED
SCALE:15X

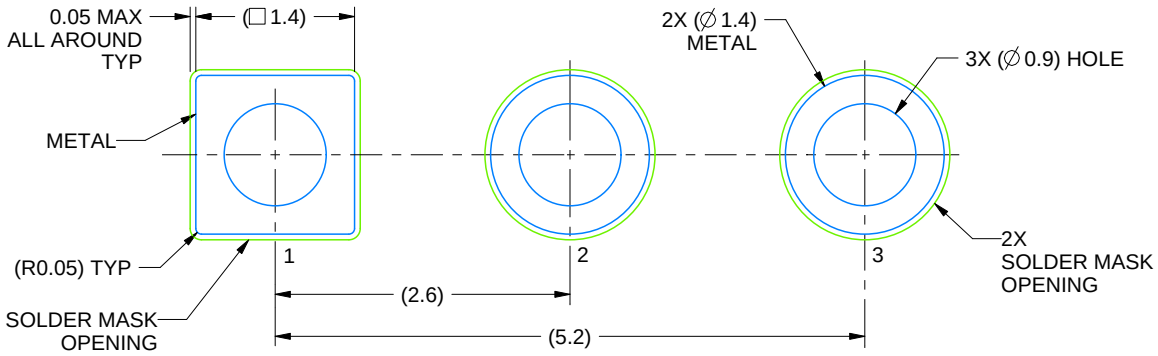

LAND PATTERN EXAMPLE
FORMED LEAD OPTION
NON-SOLDER MASK DEFINED
SCALE:15X

4215214/C 04/2025

LP0003A

TO-92 - 5.34 mm max height

TO-92

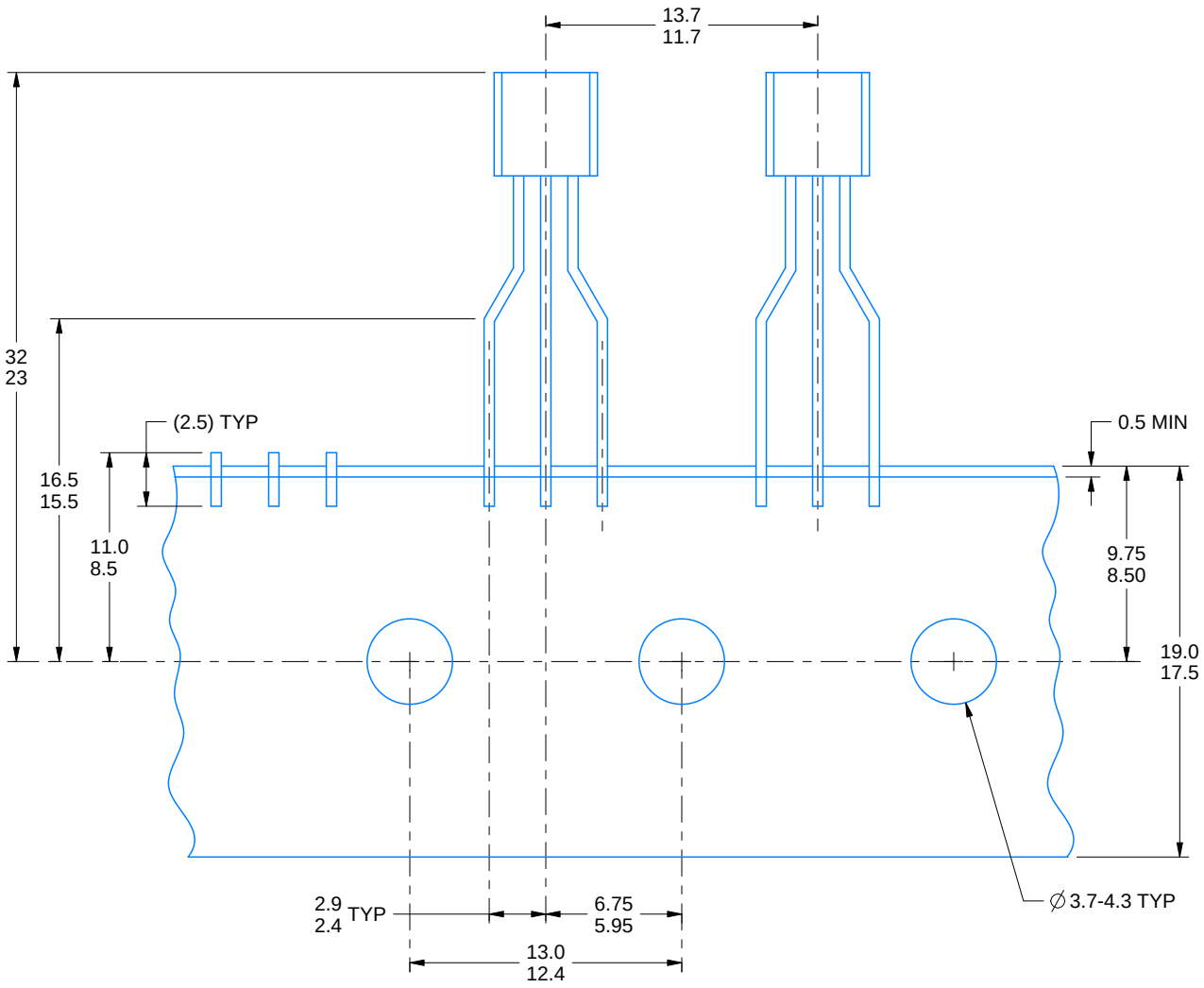

FOR FORMED LEAD OPTION PACKAGE

4215214/C 04/2025

NDV0003H



PACKAGE OUTLINE

TO-CAN - 2.67 mm max height

TRANSISTOR OUTLINE

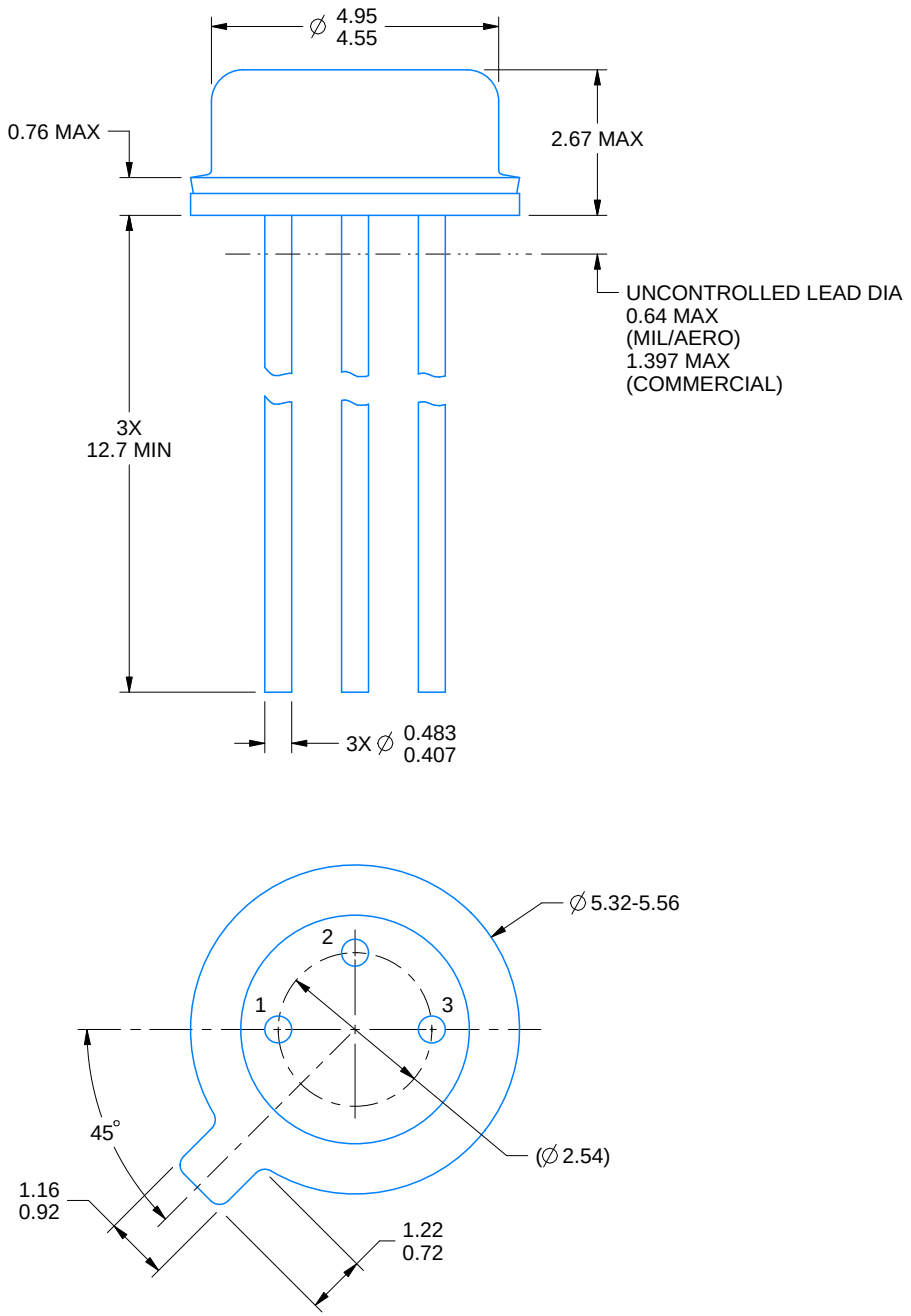

4219876/B 09/2024

NOTES:

1. All linear dimensions are in millimeters. Any dimensions in parenthesis are for reference only. Dimensioning and tolerancing per ASME Y14.5M.
2. This drawing is subject to change without notice.
3. Reference JEDEC registration TO-46.

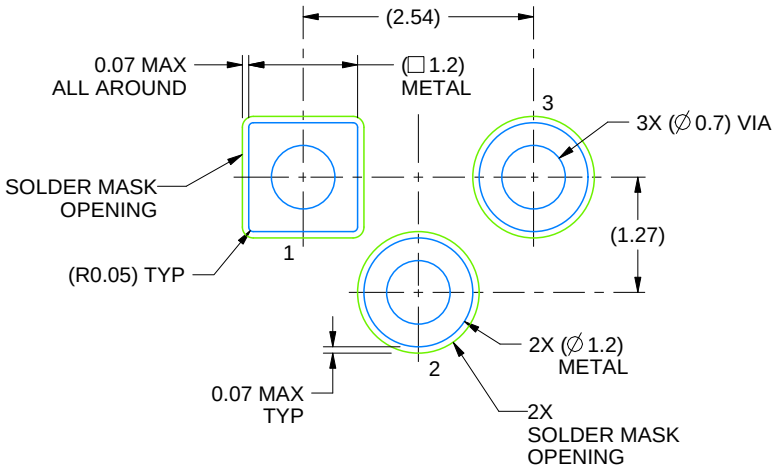

LAND PATTERN EXAMPLE
NON-SOLDER MASK DEFINED
SCALE:12X

4219876/B 09/2024

IMPORTANT NOTICE AND DISCLAIMER

TI PROVIDES TECHNICAL AND RELIABILITY DATA (INCLUDING DATASHEETS), DESIGN RESOURCES (INCLUDING REFERENCE DESIGNS), APPLICATION OR OTHER DESIGN ADVICE, WEB TOOLS, SAFETY INFORMATION, AND OTHER RESOURCES “AS IS” AND WITH ALL FAULTS, AND DISCLAIMS ALL WARRANTIES, EXPRESS AND IMPLIED, INCLUDING WITHOUT LIMITATION ANY IMPLIED WARRANTIES OF MERCHANTABILITY, FITNESS FOR A PARTICULAR PURPOSE OR NON-INFRINGEMENT OF THIRD PARTY INTELLECTUAL PROPERTY RIGHTS.

These resources are intended for skilled developers designing with TI products. You are solely responsible for (1) selecting the appropriate TI products for your application, (2) designing, validating and testing your application, and (3) ensuring your application meets applicable standards, and any other safety, security, regulatory or other requirements.

These resources are subject to change without notice. TI grants you permission to use these resources only for development of an application that uses the TI products described in the resource. Other reproduction and display of these resources is prohibited. No license is granted to any other TI intellectual property right or to any third party intellectual property right. TI disclaims responsibility for, and you fully indemnify TI and its representatives against any claims, damages, costs, losses, and liabilities arising out of your use of these resources.

TI’s products are provided subject to TI’s Terms of Sale, TI’s General Quality Guidelines, or other applicable terms available either on ti.com or provided in conjunction with such TI products. TI’s provision of these resources does not expand or otherwise alter TI’s applicable warranties or warranty disclaimers for TI products. Unless TI explicitly designates a product as custom or customer-specified, TI products are standard, catalog, general purpose devices.

TI objects to and rejects any additional or different terms you may propose.

Copyright © 2026, Texas Instruments Incorporated

Last updated 10/2025