DS26C32AMQML Quad Differential Line Receiver

Check for Samples: DS26C32AMQML

FEATURES

- **CMOS Design for Low Power**
- **±0.2V Sensitivity Over Input Common Mode Voltage Range**
- **Input Fail-Safe Circuitry**
- **Inputs Won't Load Line When V_{CC} = 0V**
- **Meets the Requirements of EIA Standard RS-422**
- **TRI-STATE Outputs for Connection to System Buses**

DESCRIPTION

The DS26C32A is a quad differential line receiver designed to meet the RS-422, RS-423, and Federal Standards 1020 and 1030 for balanced and unbalanced digital data transmission, while retaining the low power characteristics of CMOS.

The DS26C32A has an input sensitivity of 200 mV over the common mode input voltage range of ±7V. The DS26C32A features internal pull-up and pull-down resistors which prevent output oscillation on unused channels.

The DS26C32A provides an enable and disable function common to all four receivers, and features TRI-STATE outputs with 6 mA source and sink capability. This product is pin compatible with the DS26LS32A and the AM26LS32.

CONNECTION DIAGRAMS

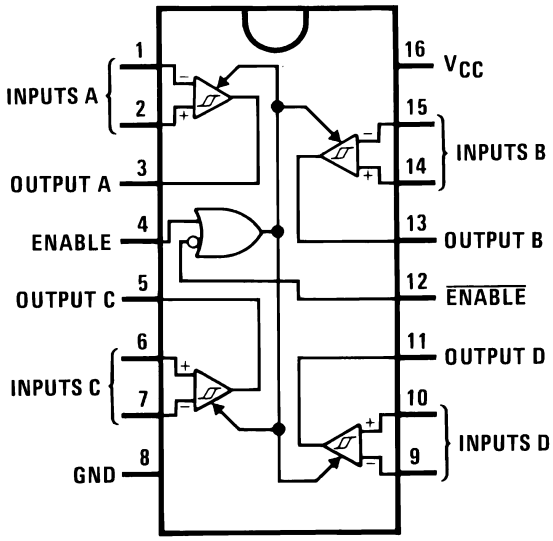

Figure 1. CDIP and CLGA Packages-Top View
See Package Numbers NFE0016A, NAC0016A, or NAD0016A

Please be aware that an important notice concerning availability, standard warranty, and use in critical applications of Texas Instruments semiconductor products and disclaimers thereto appears at the end of this data sheet.

All trademarks are the property of their respective owners.

PRODUCTION DATA information is current as of publication date. Products conform to specifications per the terms of the Texas Instruments standard warranty. Production processing does not necessarily include testing of all parameters.

Copyright © 2010–2013, Texas Instruments Incorporated

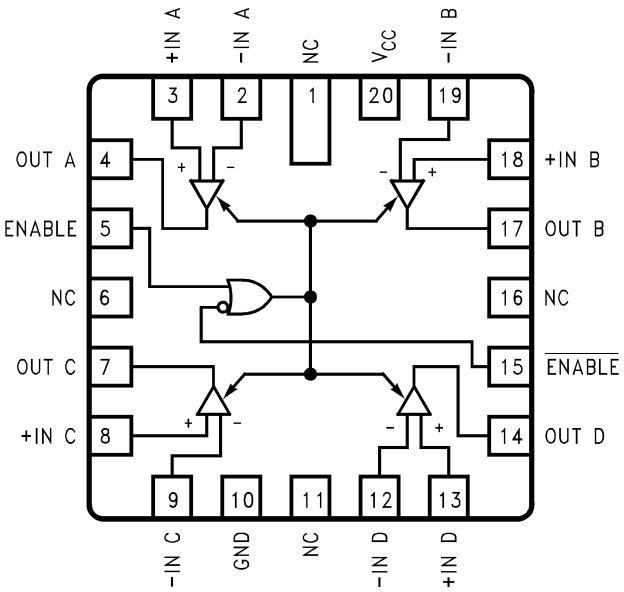

Figure 2. 20-Lead LCCC Package-Top View
See Package Number NAJ0020A

Logic Diagram

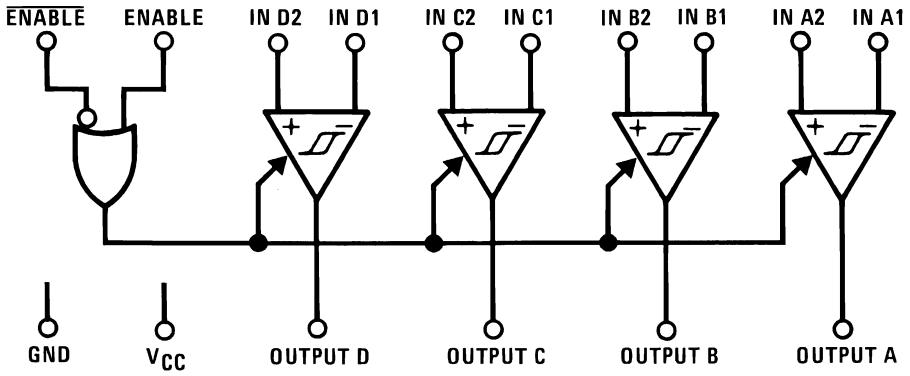

Truth Table (1)

ENABLE	$\overline{\text{ENABLE}}$	Input	Output
L	H	X	Z
All Other Combinations of Enable Inputs		$V_{ID} \geq V_{Th}$ (Max)	H
		$V_{ID} \leq V_{Th}$ (Min)	L
		Open	H

(1) Z = TRI-STATE

These devices have limited built-in ESD protection. The leads should be shorted together or the device placed in conductive foam during storage or handling to prevent electrostatic damage to the MOS gates.

Copyright © 2010–2013, Texas Instruments Incorporated

Absolute Maximum Ratings(1)(2)

Supply Voltage (V_{CC})	7V
Common Mode Range (V_{CM})	±14V
Differential Input Voltage (V_{Diff})	±14V
Enable Input Voltage (V_I)	7V
Storage Temperature Range (T_{Stg})	−65°C ≤ T_A ≤ +150°C
Lead Temperature (Soldering 4 sec.)	260°C

(1) Absolute Maximum Ratings indicate limits beyond which damage to the device may occur. Operating Ratings indicate conditions for which the device is functional, but do not verify specific performance limits. For verified specifications and test conditions, see the Electrical Characteristics. The verified specifications apply only for the test conditions listed. Some performance characteristics may degrade when the device is not operated under the listed test conditions.
(2) Unless otherwise specified, all voltages are referenced to ground.

Recommended Operating Conditions

	Min	Max	Units
Supply Voltage (V_{CC})	4.50	5.50	V
Operating Temperature Range (T_A)	−55	+125	°C

Quality Conformance Inspection

Table 1. Mil-Std-883, Method 5005 - Group A

Subgroup	Description	Temp °C
1	Static tests at	+25
2	Static tests at	+125
3	Static tests at	-55
4	Dynamic tests at	+25
5	Dynamic tests at	+125
6	Dynamic tests at	-55
7	Functional tests at	+25
8A	Functional tests at	+125
8B	Functional tests at	-55
9	Switching tests at	+25
10	Switching tests at	+125
11	Switching tests at	-55
12	Settling time at	+25
13	Settling time at	+125
14	Settling time at	-55

DS26C32AM Electrical Characteristics DC Parameters

Parameter		Test Conditions	Notes	Min	Max	Unit	Sub-groups
V_{TH}	Minimum Differential Input Voltage	V_{CC} = 5V, V_O = V_{OH} or V_{OL}, -7 < V_{CM} < +7		-200	+200	mV	1, 2, 3
R_I	Input Resistance	V_{CC} = 5V, -7 < V_{CM} < +7, One input AC Gnd		4.5	11	KΩ	1, 2, 3
I_I	Input Current	V_{CC} = 5V, V_I = +10V, Other Input = Gnd			+1.8	mA	1, 2, 3
		V_{CC} = 5V, V_I = -10V, Other Input = Gnd			-2.7	mA	1, 2, 3
V_{OH}	Logical "1" Output Voltage	V_{CC} = 4.5V, V_{Diff} = +1V, I_O = -6.0mA		3.8		V	1, 2, 3
V_{OL}	Logical "0" Output Voltage	V_{CC} = 5.5V, V_{CC} = Max, V_{Diff} = -1V, I_O = 6.0mA			0.3	V	1, 2, 3

Copyright © 2010–2013, Texas Instruments Incorporated

DS26C32AM Electrical Characteristics DC Parameters (continued)

Parameter		Test Conditions	Notes	Min	Max	Unit	Sub-groups
V_{IH}	Minimum Enable High Level Voltage		(1)	2.0		V	1, 2, 3
V_{IL}	Maximum Enable Low Level Voltage		(1)		0.8	V	1, 2, 3
I_{OZ}	Maximum TRI-STATE Output Leakage Current	$V_O = V_{CC}$ or Gnd, Enable = V_{IL}, $\overline{\text{Enable}} = V_{IH}$			±5.0	µA	1, 2, 3
I_I	Maximum Enable Input Current	$V_I = V_{CC}$ or Gnd			±1.0	µA	1, 2, 3
I_{CC}	Quiescent Power Supply Current	V_{Diff} = +1V, V_{CC} = 5.5V			25	mA	1, 2, 3

(1) Parameter tested Go-No-Go only.

DS26C32AM Electrical Characteristics AC Parameters - Propagation Delay Time

The following conditions apply, unless otherwise specified. V_{CC} = 5V ±10%, C_{CL} = 50pF, V_{Diff} = 2.5V

Parameter		Test Conditions	Notes	Min	Max	Unit	Sub-groups
t_{PLH}	Input to Output Prop Delay	V_{CM} = 0V			35	ns	9, 10, 11
t_{PHL}	Input to Output Prop Delay	V_{CM} = 0V			35	ns	9, 10, 11
t_{Rise}	Output Rise Time	V_{CM} = 0V			9	ns	9, 10, 11
t_{Fall}	Output Fall Time	V_{CM} = 0V			9	ns	9, 10, 11
t_{PLZ}	Output Disable Time	R_L = 1000Ω			29	ns	9, 10, 11
t_{PZL}	Output Enable Time	R_L = 1000Ω			29	ns	9, 10, 11
t_{PHZ}	Output Disable Time	R_L = 1000Ω			29	ns	9, 10, 11
t_{PZH}	Output Enable Time	R_L = 1000Ω			29	ns	9, 10, 11

Copyright © 2010–2013, Texas Instruments Incorporated

Typical Performance Characteristics

Differential Propagation Delay vs Temperature

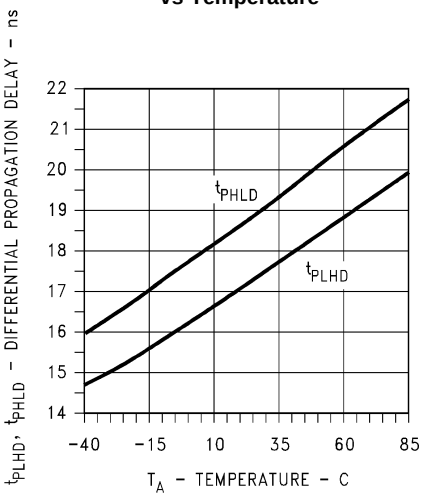

Figure 3.

Differential Propagation Delay vs Power Supply Voltage

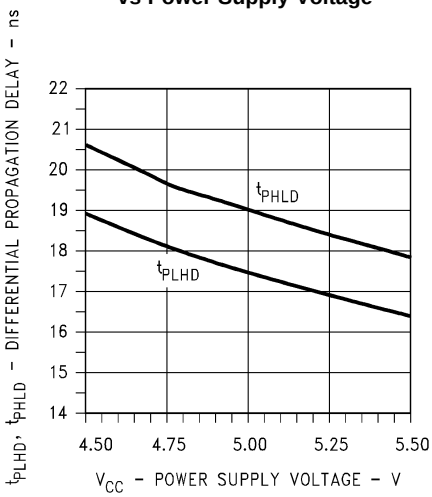

Figure 4.

Differential Skew vs Temperature

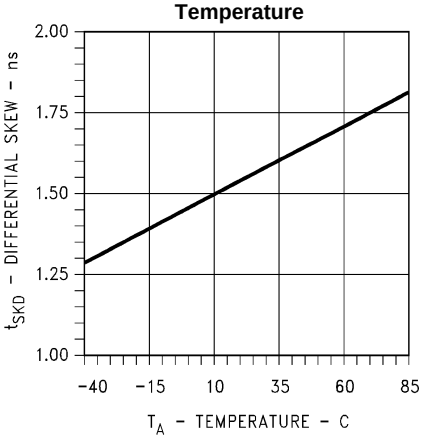

Figure 5.

Differential Skew vs Power Supply Voltage

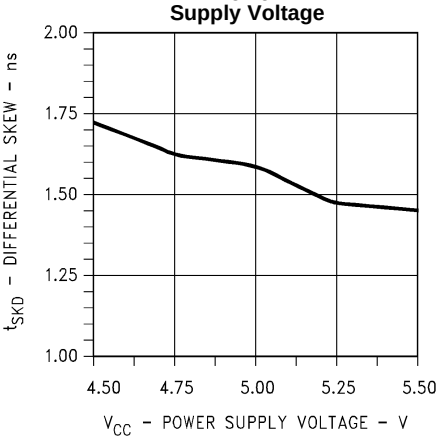

Figure 6.

Output High Voltage vs Output High Current

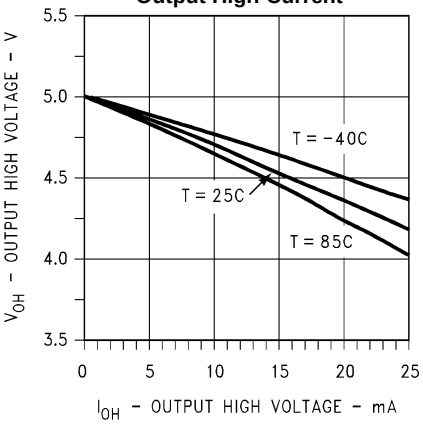

Figure 7.

Output High Voltage vs Output High Current

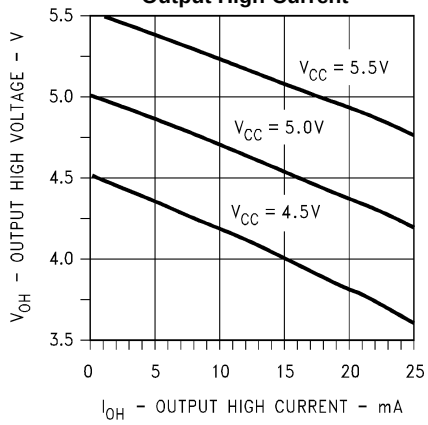

Figure 8.

Copyright © 2010–2013, Texas Instruments Incorporated

Typical Performance Characteristics (continued)

Output Low Voltage vs Output Low Current

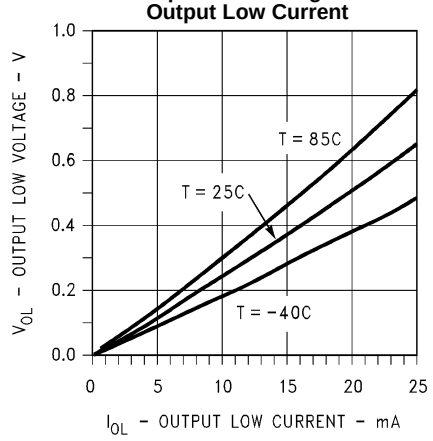

Figure 9.

Output Low Voltage vs Output Low Current

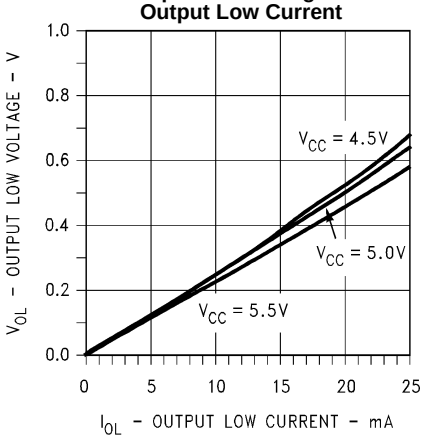

Figure 10.

Input Resistance vs Input Voltage

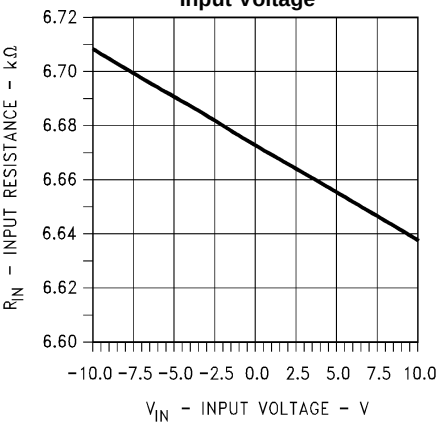

Figure 11.

Input Current vs Power Supply Voltage

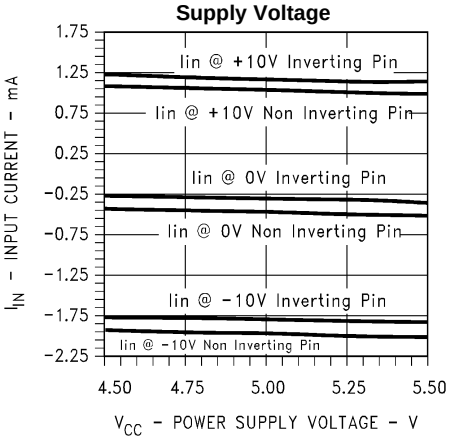

Figure 12.

Hysteresis & Differential Transition Voltage vs Temperature

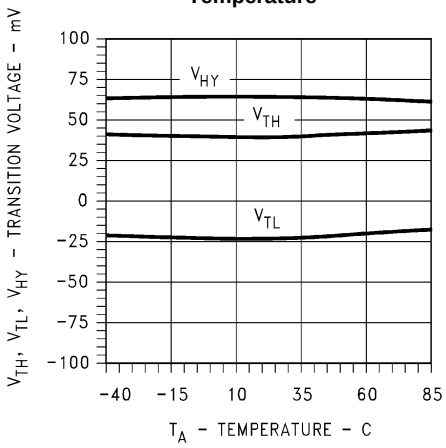

Figure 13.

Hysteresis & Differential Transition Voltage vs Power Supply Voltage

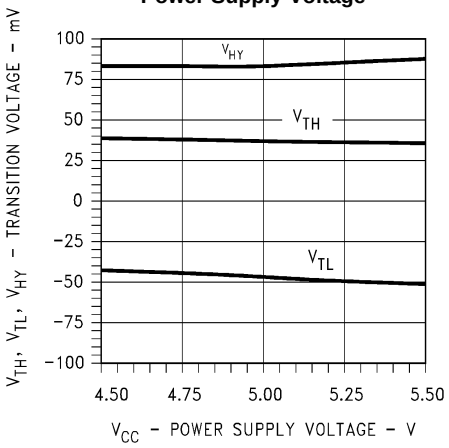

Figure 14.

Copyright © 2010–2013, Texas Instruments Incorporated

Typical Performance Characteristics (continued)

Supply Current vs Temperature

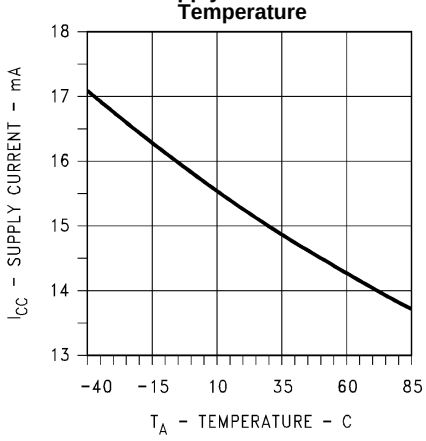

Figure 15.

Disabled Supply Current vs Power Supply Voltage

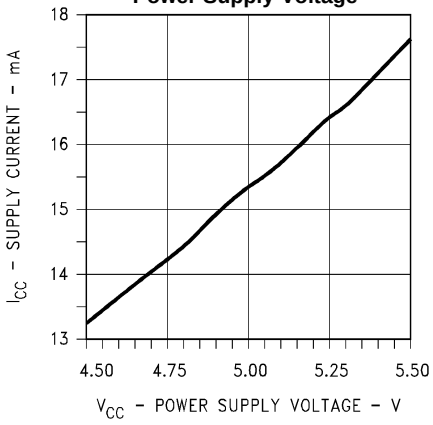

Figure 16.

Supply Current vs Data Rate

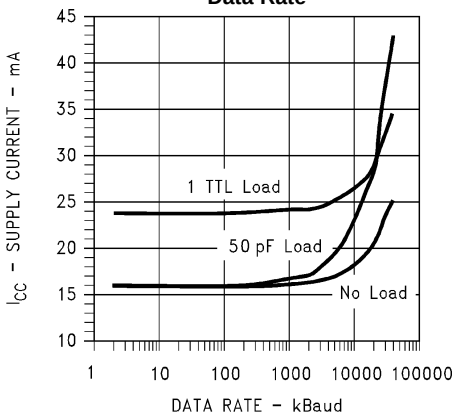

Figure 17.

Copyright © 2010–2013, Texas Instruments Incorporated

AC TEST CIRCUIT AND SWITCHING TIME WAVEFORMS

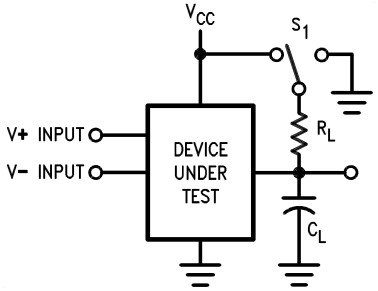

C_L includes load and test jig capacitance.
$S_1 = V_{CC}$ for t_{PZL}, and t_{PLZ} measurements.
S_1 = Gnd for t_{PZH}, and t_{PHZ} measurements.

Figure 18. Test Circuit for TRI-STATE Output Tests

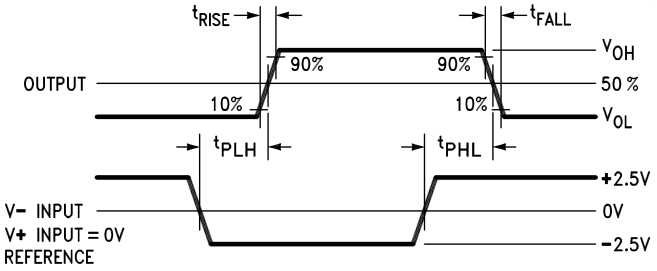

Figure 19. Propagation Delay

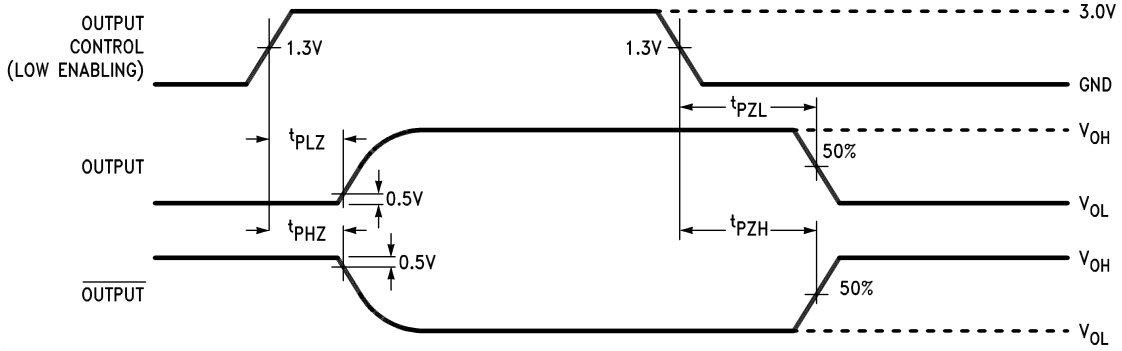

Figure 20. TRI-STATE Output Enable and Disable Waveforms

TYPICAL APPLICATIONS

Figure 21. Two-Wire Balanced Systems, RS-422

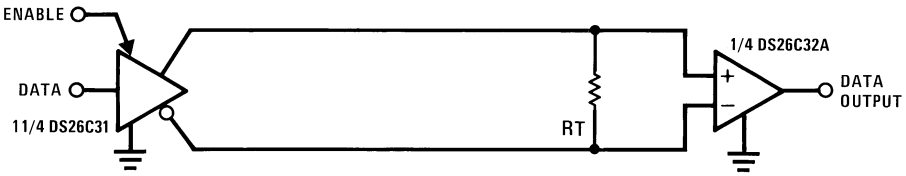

Copyright © 2010–2013, Texas Instruments Incorporated

REVISION HISTORY

Released	Revision	Section	Changes
10/26/2010	*	New Release, Corporate format	MDS data sheets converted into one Corp. data sheet format. MNDS26C32AM-X Rev 0B0 will be archived.
4/15/2013	A		Changed layout of National Data Sheet to TI format

Copyright © 2010–2013, Texas Instruments Incorporated

PACKAGING INFORMATION

Orderable part number	Status (1)	Material type (2)	Package | Pins	Package qty | Carrier	RoHS (3)	Lead finish/ Ball material (4)	MSL rating/ Peak reflow (5)	Op temp (°C)	Part marking (6)
5962-9164001M2A	Active	Production	LCCC (NAJ) | 20	50 | TUBE	Yes	Call TI	Level-1-NA-UNLIM	-55 to 125	DS26C32AME /883 Q 5962-91640 01M2A ACO 01M2A >T
5962-9164001MEA	Active	Production	CDIP (NFE) | 16	25 | TUBE	No	SNPB	Level-1-NA-UNLIM	-55 to 125	DS26C32AMJ/883 5962-9164001MEA Q
5962-9164001MFA	Active	Production	CFP (NAD) | 16	19 | TUBE	No	SNPB	Level-1-NA-UNLIM	-55 to 125	DS26C32AMW /883 Q 5962-91640 01MFA ACO 01MFA >T
5962-9164001MXA	Active	Production	CFP (NAC) | 16	88 | JEDEC TRAY (5+1)	No	SNPB	Level-1-NA-UNLIM	-55 to 125	DS26C32AMWG /883 Q 5962-91640 01MXA ACO 01MXA >T
DS26C32A MD8	Active	Production	DIESALE (Y) | 0	100 | JEDEC TRAY (5+1)	Yes	Call TI	Level-1-NA-UNLIM	-55 to 125	
DS26C32A-MD8.A	Active	Production	DIESALE (Y) | 0	100 | JEDEC TRAY (5+1)	Yes	Call TI	Level-1-NA-UNLIM	-55 to 125	
DS26C32AME/883	Active	Production	LCCC (NAJ) | 20	50 | TUBE	Yes	Call TI	Level-1-NA-UNLIM	-55 to 125	DS26C32AME /883 Q 5962-91640 01M2A ACO 01M2A >T
DS26C32AME/883.A	Active	Production	LCCC (NAJ) | 20	50 | TUBE	Yes	Call TI	Level-1-NA-UNLIM	-55 to 125	DS26C32AME /883 Q 5962-91640 01M2A ACO 01M2A >T
DS26C32AMJ/883	Active	Production	CDIP (NFE) | 16	25 | TUBE	No	SNPB	Level-1-NA-UNLIM	-55 to 125	DS26C32AMJ/883 5962-9164001MEA Q
DS26C32AMJ/883.A	Active	Production	CDIP (NFE) | 16	25 | TUBE	No	SNPB	Level-1-NA-UNLIM	-55 to 125	DS26C32AMJ/883 5962-9164001MEA Q

Orderable part number	Status (1)	Material type (2)	Package | Pins	Package qty | Carrier	RoHS (3)	Lead finish/ Ball material (4)	MSL rating/ Peak reflow (5)	Op temp (°C)	Part marking (6)
DS26C32AMW/883	Active	Production	CFP (NAD) | 16	19 | TUBE	No	SNPB	Level-1-NA-UNLIM	-55 to 125	DS26C32AMW /883 Q 5962-91640 01MFA ACO 01MFA >T
DS26C32AMW/883.A	Active	Production	CFP (NAD) | 16	19 | TUBE	No	SNPB	Level-1-NA-UNLIM	-55 to 125	DS26C32AMW /883 Q 5962-91640 01MFA ACO 01MFA >T
DS26C32AMW/883.B	Active	Production	CFP (NAD) | 16	19 | TUBE	No	SNPB	Level-1-NA-UNLIM	-55 to 125	DS26C32AMW /883 Q 5962-91640 01MFA ACO 01MFA >T
DS26C32AMWG/883	Active	Production	CFP (NAC) | 16	88 | JEDEC TRAY (5+1)	No	SNPB	Level-1-NA-UNLIM	-55 to 125	DS26C32AMWG /883 Q 5962-91640 01MXA ACO 01MXA >T
DS26C32AMWG/883.A	Active	Production	CFP (NAC) | 16	88 | JEDEC TRAY (5+1)	No	SNPB	Level-1-NA-UNLIM	-55 to 125	DS26C32AMWG /883 Q 5962-91640 01MXA ACO 01MXA >T

(1) **Status:** For more details on status, see our product life cycle.

(2) **Material type:** When designated, preproduction parts are prototypes/experimental devices, and are not yet approved or released for full production. Testing and final process, including without limitation quality assurance, reliability performance testing, and/or process qualification, may not yet be complete, and this item is subject to further changes or possible discontinuation. If available for ordering, purchases will be subject to an additional waiver at checkout, and are intended for early internal evaluation purposes only. These items are sold without warranties of any kind.

(3) **RoHS values:** Yes, No, RoHS Exempt. See the TI RoHS Statement for additional information and value definition.

(4) **Lead finish/Ball material:** Parts may have multiple material finish options. Finish options are separated by a vertical ruled line. Lead finish/Ball material values may wrap to two lines if the finish value exceeds the maximum column width.

(5) MSL rating/Peak reflow: The moisture sensitivity level ratings and peak solder (reflow) temperatures. In the event that a part has multiple moisture sensitivity ratings, only the lowest level per JEDEC standards is shown. Refer to the shipping label for the actual reflow temperature that will be used to mount the part to the printed circuit board.

(6) Part marking: There may be an additional marking, which relates to the logo, the lot trace code information, or the environmental category of the part.

Multiple part markings will be inside parentheses. Only one part marking contained in parentheses and separated by a "~" will appear on a part. If a line is indented then it is a continuation of the previous line and the two combined represent the entire part marking for that device.

Important Information and Disclaimer: The information provided on this page represents TI's knowledge and belief as of the date that it is provided. TI bases its knowledge and belief on information provided by third parties, and makes no representation or warranty as to the accuracy of such information. Efforts are underway to better integrate information from third parties. TI has taken and continues to take reasonable steps to provide representative and accurate information but may not have conducted destructive testing or chemical analysis on incoming materials and chemicals. TI and TI suppliers consider certain information to be proprietary, and thus CAS numbers and other limited information may not be available for release.

In no event shall TI's liability arising out of such information exceed the total purchase price of the TI part(s) at issue in this document sold by TI to Customer on an annual basis.

TUBE

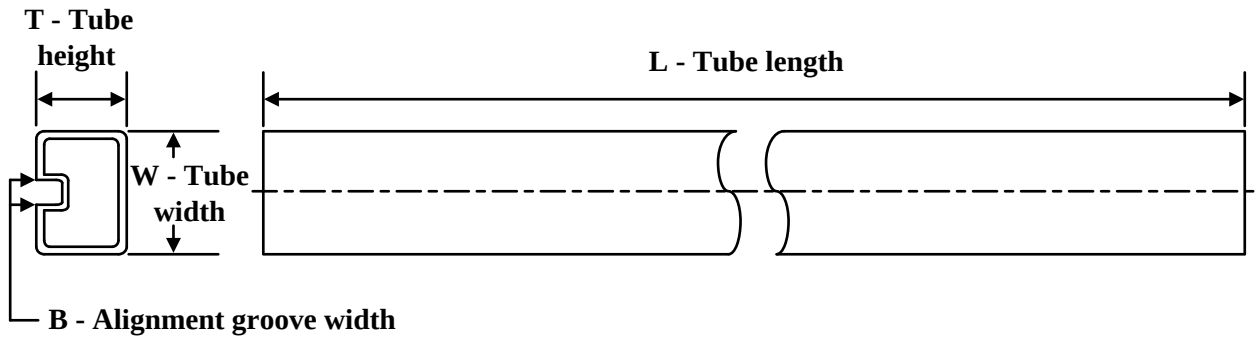

*All dimensions are nominal

Device	Package Name	Package Type	Pins	SPQ	L (mm)	W (mm)	T (µm)	B (mm)
5962-9164001M2A	NAJ	LCCC	20	50	470	11	3810	0
5962-9164001MEA	NFE	CDIP	16	25	506.98	15.24	13440	NA
5962-9164001MFA	NAD	CFP	16	19	502	23	9398	9.78
DS26C32AME/883	NAJ	LCCC	20	50	470	11	3810	0
DS26C32AME/883.A	NAJ	LCCC	20	50	470	11	3810	0
DS26C32AMJ/883	NFE	CDIP	16	25	506.98	15.24	13440	NA
DS26C32AMJ/883.A	NFE	CDIP	16	25	506.98	15.24	13440	NA
DS26C32AMW/883	NAD	CFP	16	19	502	23	9398	9.78
DS26C32AMW/883.A	NAD	CFP	16	19	502	23	9398	9.78
DS26C32AMW/883.B	NAD	CFP	16	19	502	23	9398	9.78

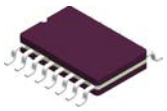

PACKAGE OUTLINE

NAC0016A

CFP - 2.33mm max height

CERAMIC FLATPACK

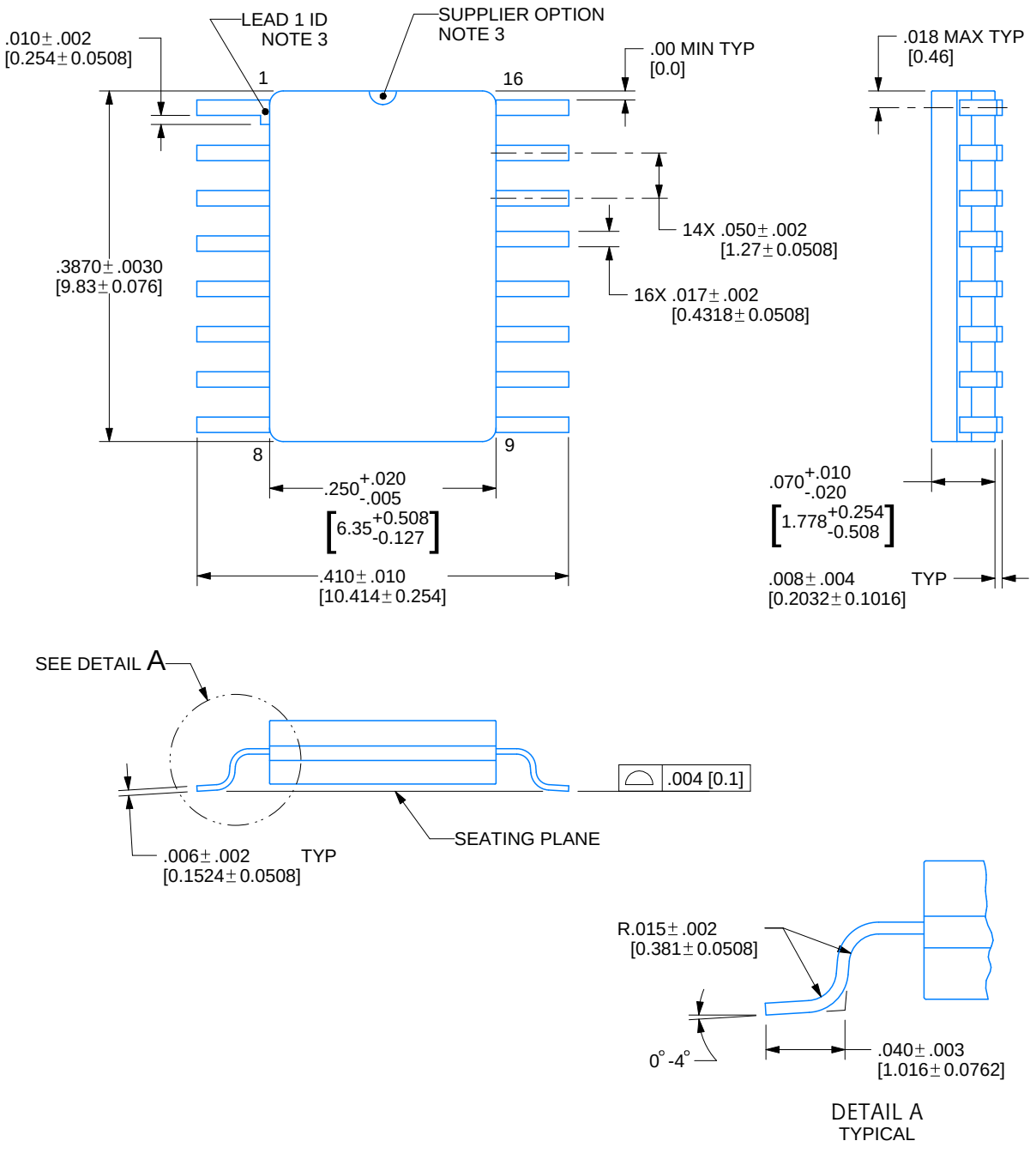

4215198/C 08/2022

NOTES:

1. Controlling dimension is Inch. Values in [ ] are milimeters. Dimensions in ( ) for reference only.
2. For solder thickness and composition, see the "Lead Finish Composition/Thickness" link in the packaging section of the Texas Instruments website
3. Lead 1 identification shall be:
   a) A notch or other mark within this area
   b) A tab on lead 1, either side
4. No JEDEC registration as of December 2021

EXAMPLE BOARD LAYOUT

NAC0016A

CFP - 2.33mm max height

CERAMIC FLATPACK

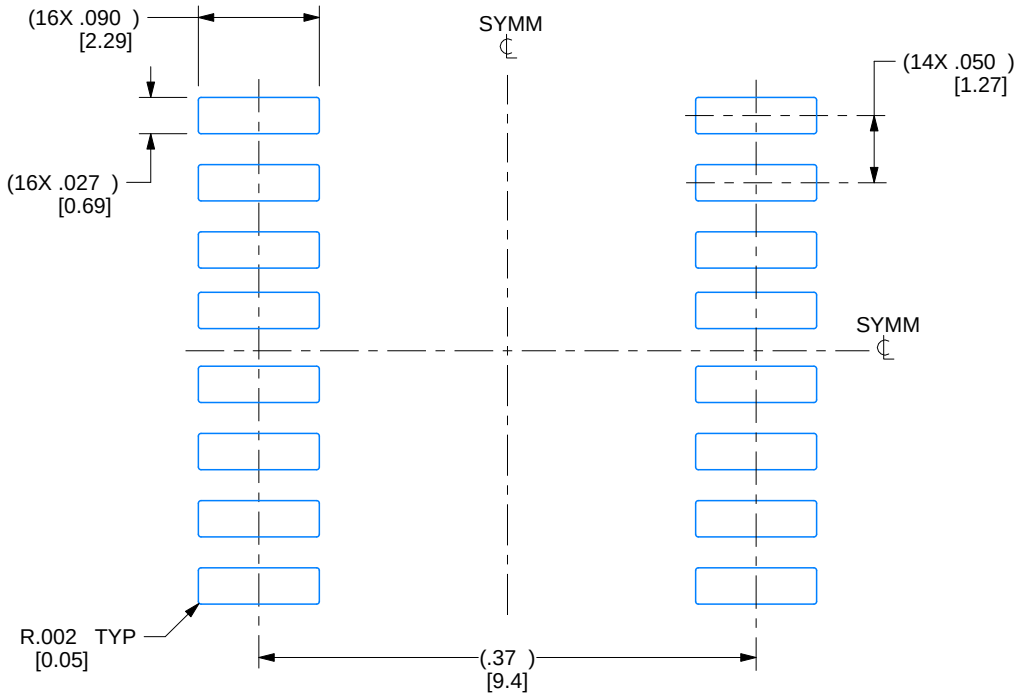

RECOMMENDED LAND PATTERN

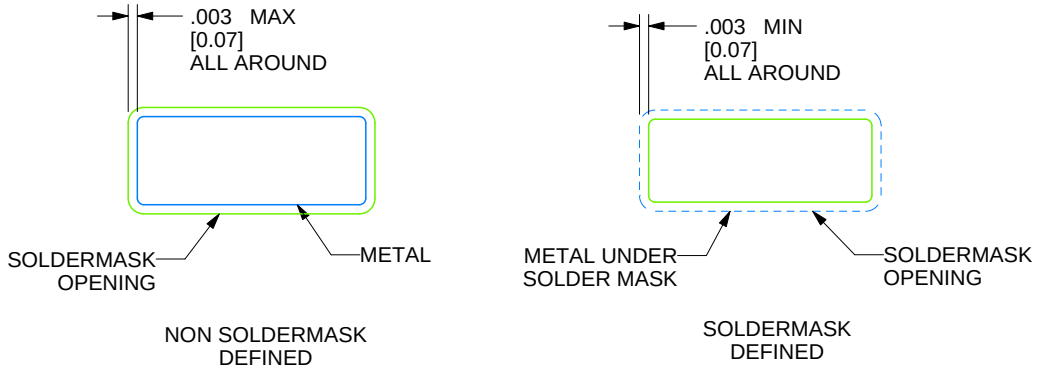

4215198/C 08/2022

REVISIONS

REV	DESCRIPTION	E.C.N.	DATE	BY/APP'D
A	RELEASE TO DOCUMENT CONTROL	2197879	12/30/2021	TINA TRAN / ANIS FAUZI
B	NO CHANGE TO DRAWING; REVISION FOR YODA RELEASE;	2198832	02/15/2022	K. SINCERBOX
C	.387± .003 WAS .39000± .00012;	2200917	08/08/2022	D. CHIN / K. SINCERBOX

NFE0016A

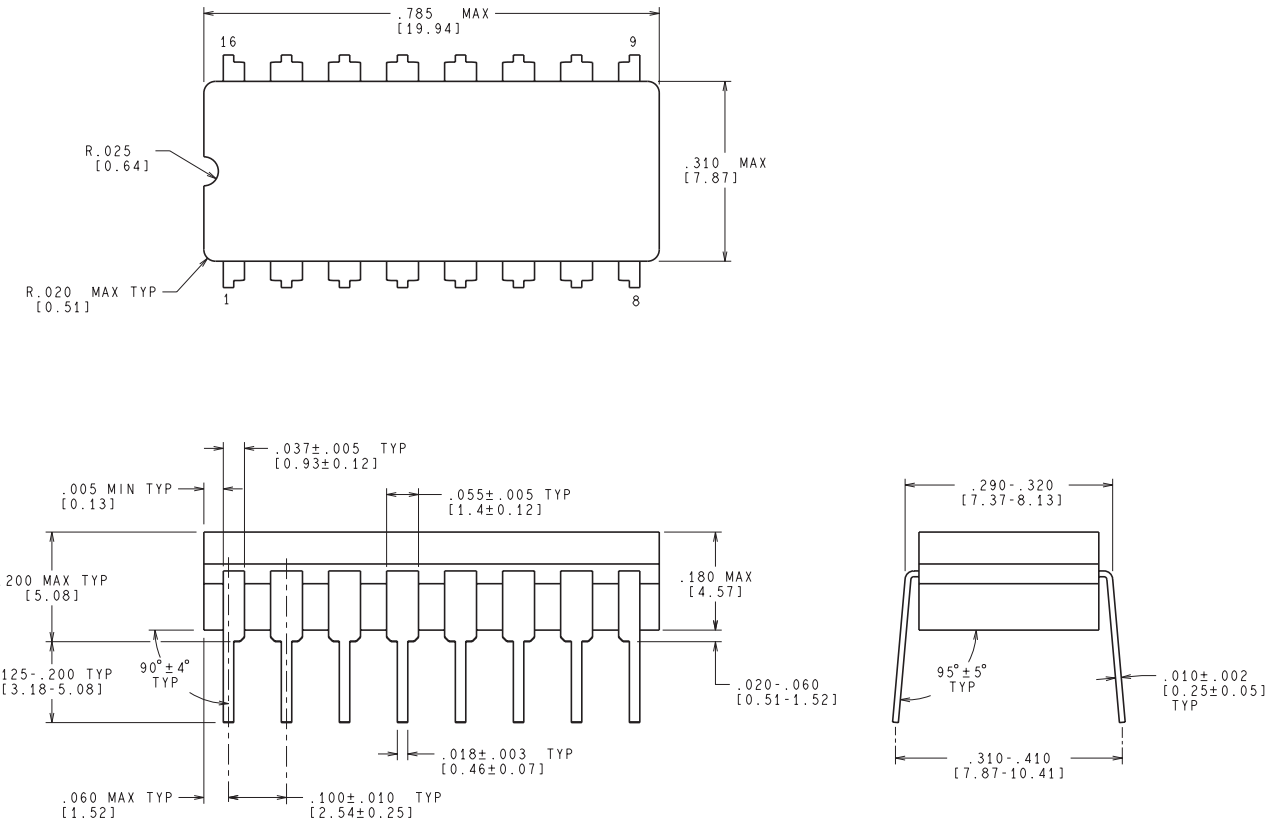

CONTROLLING DIMENSION IS INCH
VALUES IN [ ] ARE MILLIMETERS

J16A (REV L)

NAD0016A



PACKAGE OUTLINE

CFP - 2.03 mm max height

CERAMIC FLATPACK

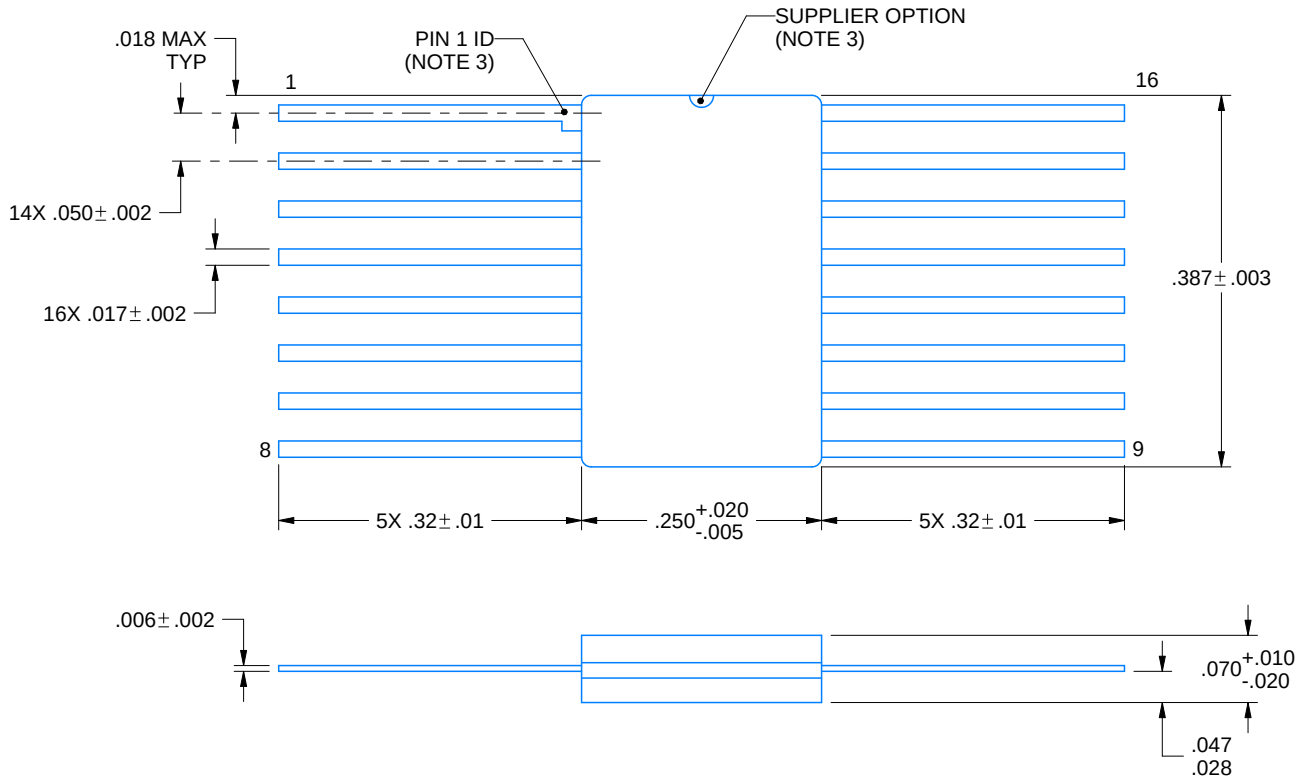

4215193/A 07/2026

NOTES:

1. All linear dimensions are in inches. Any dimensions in parenthesis are for reference only. Dimensioning and tolerancing per ASME Y14.5M.
2. This drawing is subject to change without notice.
3. Lead 1 identification shall be:
   a) A notch or other mark within this area
   b) A tab on lead 1, either side

NAJ0020A

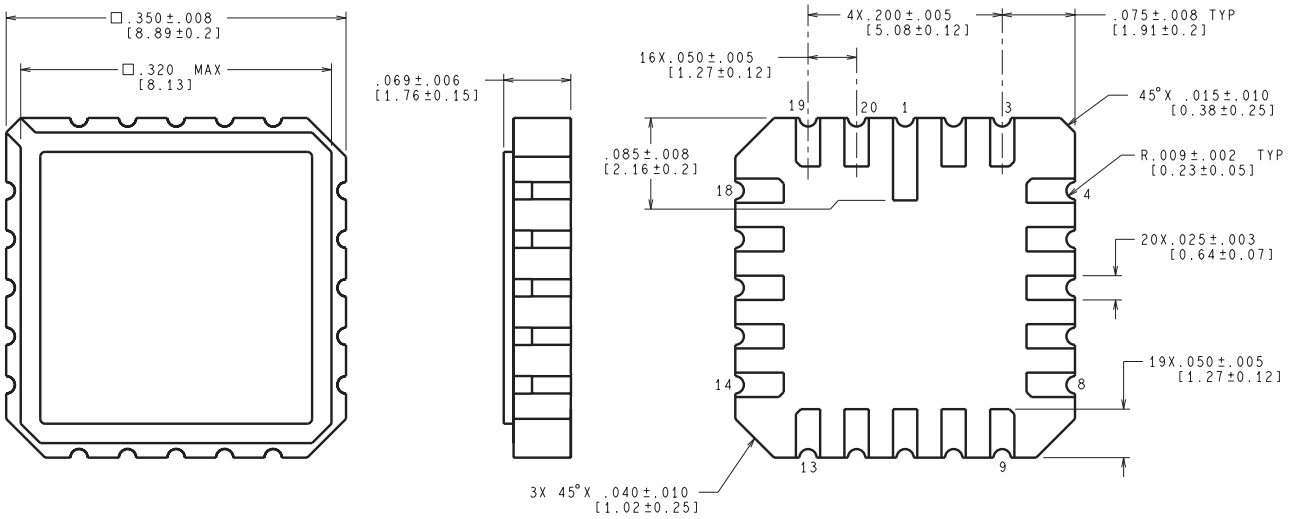

CONTROLLING DIMENSION IS INCH
VALUES IN [ ] ARE MILLIMETERS

E20A (Rev F)

IMPORTANT NOTICE AND DISCLAIMER

TI PROVIDES TECHNICAL AND RELIABILITY DATA (INCLUDING DATASHEETS), DESIGN RESOURCES (INCLUDING REFERENCE DESIGNS), APPLICATION OR OTHER DESIGN ADVICE, WEB TOOLS, SAFETY INFORMATION, AND OTHER RESOURCES “AS IS” AND WITH ALL FAULTS, AND DISCLAIMS ALL WARRANTIES, EXPRESS AND IMPLIED, INCLUDING WITHOUT LIMITATION ANY IMPLIED WARRANTIES OF MERCHANTABILITY, FITNESS FOR A PARTICULAR PURPOSE OR NON-INFRINGEMENT OF THIRD PARTY INTELLECTUAL PROPERTY RIGHTS.

These resources are intended for skilled developers designing with TI products. You are solely responsible for (1) selecting the appropriate TI products for your application, (2) designing, validating and testing your application, and (3) ensuring your application meets applicable standards, and any other safety, security, regulatory or other requirements.

These resources are subject to change without notice. TI grants you permission to use these resources only for development of an application that uses the TI products described in the resource. Other reproduction and display of these resources is prohibited. No license is granted to any other TI intellectual property right or to any third party intellectual property right. TI disclaims responsibility for, and you fully indemnify TI and its representatives against any claims, damages, costs, losses, and liabilities arising out of your use of these resources.

TI’s products are provided subject to TI’s Terms of Sale, TI’s General Quality Guidelines, or other applicable terms available either on ti.com or provided in conjunction with such TI products. TI’s provision of these resources does not expand or otherwise alter TI’s applicable warranties or warranty disclaimers for TI products. Unless TI explicitly designates a product as custom or customer-specified, TI products are standard, catalog, general purpose devices.

TI objects to and rejects any additional or different terms you may propose.

Copyright © 2026, Texas Instruments Incorporated

Last updated 10/2025