2.4 GHz RF SoC FOR WIRELESS DIGITAL AUDIO STREAMING CC8520, CC8521, CC8530 & CC8531 - PurePath™ Wireless

APPLICATIONS

- Wireless high-quality digital audio
- Wireless point-to-point audio link
- Wireless (USB) headphones / headsets
- Wireless (USB) loudspeakers
- Wireless (USB) microphones
- Wireless 2.1 speaker systems
- CC852x supports up to 2 channels
- CC853x supports up to 4 channels
- CC85x1 supports USB

FEATURES

Built-in audio protocol

- CD-quality uncompressed audio
- Excellent robustness and co-existence through multiple techniques
  - Adaptive Frequency Hopping
  - Forward Error Correction
  - Buffering and Retransmission
  - Error Concealment
  - Optional high quality audio compression
- No software development needed when used in autonomous mode

External system

- Can be used autonomously, or can be controlled by an external host MCU for greatest flexibility
- Seamless connection and control of external audio codecs, DACs/ADCs and digital audio amplifiers using I2S and I2C
- HID functions like power control, pairing, volume control, audio channel selection etc. can be mapped to I/Os
- RoHS compliant 6mm x 6mm QFN-40 package

RF section

- 5 or 2 Mbps over-the-air data rate
- Bandwidth-efficient modulation format
- Excellent link budget with programmable output power up to +3.5 dBm and -83/-86 dBm sensitivity
- Seamless support for CC2590 range extender (+11dBm output power, -87dBm sensitivity)
- Suited for systems targeting compliance with worldwide radio frequency regulations: ETSI EN 300 328 and EN 300 440 class 2 (Europe), FCC CFR47 Part 15 (US) and ARIB STD-T66 (Japan)

Digital audio support

- Digital I2S audio interface supports 1 or 2 audio channels for the CC8520 and 1 to 4 audio channels for the CC8530 at sample rates of 32, 40.275, 44.1 and 48 kHz, and supports 16 and 24 bit word-widths
- USB audio support for 32, 44.1 and 48 kHz, and supports 16 and 24 bit word-widths
- Audio latency down to 10.7 ms
- Data side-channel allows data to be sent alongside the audio between external host processors

USB

- Full-speed USB Audio device
- USB Basic Audio Device Class: HT1, HS1 and MT topologies (headphone, headset and microphone)
- USB Audio Device Class.
- Basic USB HID device class support for remote control, mouse and keyboard functionality
- Autonomous operation only.

Development tools

- PC-based PurePath™ Wireless Configurator for CC85xx configuration
- CC85xx Family User Guide
- CC85XXDK audio development kit
- CC85XXDK-HEADSET development kit

QFN-40 PIN CONFIGURATION (TOP VIEW)

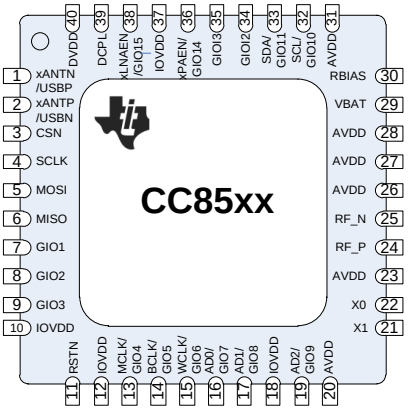

PRODUCTION DATA information is current as of publication date. Products conform to specifications per the terms of Texas Instruments standard warranty. Production processing does not necessarily include testing of all parameters.
Please be aware that an important notice concerning availability, standard warranty, and use in critical applications of Texas Instruments semiconductor products and disclaimers thereto appears at the end of this data sheet.
PurePath™ is a trademark for Texas Instruments
All other trademarks are the property of their respective owners.

Copyright © 2010, Texas Instruments Incorporated

DESCRIPTION

The PurePath™ Wireless platform is a cost-effective and low-power solution optimized for wireless transmission of high-quality digital audio.

The CC85xx includes a robust built-in wireless audio transmission protocol and can control selected external audio devices. Utilizing numerous coexistence mechanisms allows the CC85xx to avoid interfering with, or being interfered by other 2.4 GHz radio systems.

The CC85xx operates autonomously, and can be used with or without an external MCU. An external host processor can be connected through SPI and control some aspects of its operation. The CC85xx interfaces easily with other TI audio ICs and DSPs (using I2S and DSP/TDM interfaces). More details can be found in the CC85xx Family User Guide [2].

ABBREVIATIONS

ADC	Analog to Digital Converter	LED	Light Emitting Diode
ARIB	Association of Radio Industries and Businesses	LNA	Low Noise Amplifier
BER	Bit Error Rate	MISO	Master In Slave Out
CODEC	Coder/Decoder	MOSI	Master Out Slave In
DAC	Digital to Analog Converter	MCU	Microcontroller
DSP	Digital Signal Processor	PA	Power Amplifier
EHIF	External Host Interface	PCM	Pulse Code Modulation
ESD	Electro Static Discharge	PER	Packet Error Rate
ETSI	European Telecommunications Standard Institute	PLL	Phase Lock Loop
FCC	Federal Communications Commission	PM	Protocol Master
FEC	Forward Error Correction	PPW	PurePath™ Wireless
FSK	Frequency Shift Keying	PS	Protocol Slave
FW	Firmware	RoHS	Restriction of Hazardous Substances
HID	Human Interface Device	RF	Radio Frequency
I2C	Inter-Integrated Circuit (serial communications bus)	SLAC	Slightly Lossy Compression Algorithm
I2S	Inter-IC Sound (serial bus for digital audio signals)	SPI	Serial Peripheral Interface
IEEE	Institute of Electrical and Electronics Engineers	SoC	System-on-Chip
ISM	Industrial, Scientific, Medical	STD	Standard
JEDEC	Joint Electron Device Engineering Council	TDM	Time-Division Multiplexing
LDO	Low-Dropout Regulator		

Copyright © 2010, Texas Instruments Incorporated

This integrated circuit can be damaged by ESD. Texas Instruments recommends that all integrated circuits be handled with appropriate precautions. Failure to observe proper handling and installation procedures can cause damage.

ESD damage can range from subtle performance degradation to complete device failure. Precision integrated circuits may be more susceptible to damage because very small parametric changes could cause the device not to meet its published specifications.

ABSOLUTE MAXIMUM RATINGS[1]

PARAMETER	TEST CONDITIONS	Min	Max	Unit
Supply voltage [2]	All supply pins must have the same voltage	–0.3	3.9	V
Voltage on any digital pin		–0.3	min(VDD + 0.3, 3.9)	V
Input RF level			10	dBm
Storage temperature range		-40	125	°C
ESD [3]	All pads, according to human-body model (HBM), JEDEC STD 22, method A114		2000	V
	According to charged-device model (CDM), JEDEC STD 22, method C101E		400	V

[1] Stresses beyond those listed under Absolute Maximum Ratings may cause permanent damage to the device. These are stress ratings only, and functional operation of the device at these or any other conditions beyond those indicated under Recommended Operating Conditions is not implied. Exposure to absolute-maximum-rated conditions for extended periods may affect device reliability.

[2] For CC8521 and CC8531 running on USB power, a LDO is needed to comply with these ratings.

[3] CAUTION: ESD sensitive device. Precaution should be used when handing the device in order to prevent permanent damage.

RECOMMENDED OPERATING CONDITIONS, CC8520/CC8530

PARAMETER	TEST CONDITIONS	Min	Max	Unit
Operating ambient temperature range, T_A		-40	+85	°C
Operating supply voltage		2.0	3.6	V

RECOMMENDED OPERATING CONDITIONS, CC8521/CC8531

PARAMETER	TEST CONDITIONS	Min	Max	Unit
Operating ambient temperature range, T_A		-40	+85	°C
Operating supply voltage [1]		3.0	3.6	V

[1] For CC8521 and CC8531 running on USB power, an LDO is needed to comply with these ratings.

Copyright © 2010, Texas Instruments Incorporated

GENERAL CHARACTERISTICS

Measured on Texas Instruments CC85xxEM reference designs with T_A = 25°C and VDD = 3.3 V, unless otherwise noted.

PARAMETER	TEST CONDITION	MIN	TYP	MAX	UNIT
RF frequency range		2400		2483.5	MHz
Data rate	Shaped 8FSK Shaped 2FSK		5 2		Mbps
Audio latency	Latency between I2S interface on audio source and I2S interface on audio sink. Uncompressed 16 or 24 bit. Audio latency is programmable using the PurePath Wireless Configurator [1].	512(1)		2048	Samples
Audio sample rate	Audio sample rate is programmable using the PurePath Wireless Configurator [1] (2)		48 44.1 40.275(3) 32		kHz

(1) Latencies below 768 samples only supported for some configurations

(2) ±2000ppm tolerance

(3) Not supported in USB mode. For USB Headset, dynamic sample rate change is not allowed.

ELECTRICAL CHARACTERISTICS, CC8520/CC8521/CC8530/CC8531

Measured on Texas Instruments CC85xxEM reference designs with T_A = 25°C and VDD = 3.3 V, unless otherwise noted.

PARAMETER	TEST CONDITION	MIN	TYP	MAX	UNIT
Current consumption, power down state	Voltage regulator / crystal oscillator off – status lost (POWERED_DOWN state)		1		µA
Current consumption, headphone master(1)	Average current for a PurePath Wireless master with I2S interface active, sourcing two PCM16 channels with maximum output power.		29		mA
Current consumption, headphone slave(1)	Average current for a PurePath Wireless slave with I2S interface active, sinking two PCM16 channels with maximum output power		25		mA

(1) Measured on Texas Instruments CC85xx EM reference designs and CC85XXDK. Sample rate 48 kHz, MCLK disabled. 5 Mbit mode

RF CHARACTERISTICS, CC8520/CC8521/CC8530/CC8531

Measured on Texas Instruments CC85xx EM reference designs with T_A = 25°C and VDD = 3.3 V, unless otherwise noted.

PARAMETER	TEST CONDITION	MIN	TYP	MAX	UNIT
Output power	Maximum output power setting		3.5		dBm
Receiver sensitivity(1)	5 Mbps 2 Mbps(2)		-83 -86		dBm
Saturation (maximum input level) (1)	5 Mbps 2 Mbps(2)		-2 6		dBm
Selectivity	Adjacent channel, ±4MHz, wanted 3dB above sensitivity. 5 Mbps Adjacent channel, ±4MHz, wanted 3dB above sensitivity. 2 Mbps(2)		8 20		dB
	Alternate channel, ±8MHz, wanted 3dB above sensitivity. 5 Mbps Alternate channel, ±8MHz, wanted 3dB above sensitivity. 2 Mbps(2)		35 43		dB
Occupied bandwidth	99% energy bandwidth. 5 Mbps 99% energy bandwidth. 2 Mbps(2)		3.8 3.2		MHz
Optimum load impedance	Differential impedance seen from the RF port (RF_P and RF_N) towards the antenna	70 + j30			Ω
Spurious emission	Suitable for systems targeting compliance with EN 300 328, EN 300 440(3), FCC CFR47 Part 15 and ARIB STD-T-66				

(1) Measured using data packets with 40 byte payload, 0.1% BER for 5 Mbit and 125 byte payload, 0.001% BED for 2 Mbit

(2) Typical data measured across 6 devices at room temperature.

(3) Systems with external antenna connector: Margins for passing conducted requirements at sub 1GHz frequencies can be improved by using a simple band-pass filter connected between matching network and RF connector (1.6 pF in parallel with 1.6 nH); this filter must be connected to a good RF ground.

Copyright © 2010, Texas Instruments Incorporated

ELECTRICAL CHARACTERISTICS, CC8520/CC8521/CC8530/CC8531+CC2590

Measured on Texas Instruments CC85xx+CC2590 EM reference designs with T_A = 25°C and VDD = 3.3 V, unless otherwise noted.

PARAMETER	TEST CONDITION	MIN	TYP	MAX	UNIT
Current consumption, power down state[1]	Voltage regulator / crystal oscillator off – status lost (POWERED_DOWN state)		1		µA
Current consumption, headphone master[2]	Average current for a PurePath Wireless master with I2S interface active, sourcing two PCM16 channels.		38		mA
Current consumption, headphone slave[2]	Average current for a PurePath Wireless slave with I2S interface active, sinking two PCM16 channels		28		mA

(1) CC2590 power down current is 100 nA[4]

(2) Measured on Texas Instruments CC85xx+CC2590 EM reference designs and CC85XXDK. Sample rate 48 kHz, MCLK disabled. 5 Mbit mode

RF CHARACTERISTICS, CC8520/CC8521/CC8530/CC8531+CC2590

Measured on Texas Instruments CC85xx+CC2590 EM reference designs with T_A = 25°C and VDD = 3.3 V, unless otherwise noted.

PARAMETER	TEST CONDITION	MIN	TYP	MAX	UNIT
Output power	Maximum output power setting		11		dBm
Receiver sensitivity[1]	5 Mbps 2 Mbps[2]		-87 -90		dBm
Saturation (maximum input level)[1]	5 Mbps		-12		dBm
Selectivity	Adjacent channel, ±4MHz, wanted 3dB above sensitivity. 5 Mbps		9		dB
	Alternate channel, ±8MHz, wanted 3dB above sensitivity. 5 Mbps		34		
Spurious emission	Suitable for systems targeting compliance with EN 300 328, EN 300 440[3], FCC CFR47 Part 15 and ARIB STD-T-66				

(1) Measured using data packets with 40 byte payload, 0.1% BER for 5 Mbit and 125 byte payload, 0.001% BER for 2 Mbit

(2) Typical data measured across 6 devices at room temperature.

(3) Systems with external antenna connector: Margins for passing conducted requirements at sub 1GHz frequencies can be improved by using a simple band-pass filter connected between matching network and RF connector (1.6 pF in parallel with 1.6 nH); this filter must be connected to a good RF ground.

48-MHz CRYSTAL REQUIREMENTS

General parameters with T_A = 25°C and VDD = 3.3 V, unless otherwise noted.

PARAMETER	TEST CONDITION	MIN	TYP	MAX	UNIT
Crystal frequency			48		MHz
Crystal frequency accuracy requirement[1]		-50		50	ppm
ESR Equivalent series resistance		-		60	ohm
C_0 Crystal shunt capacitance		-		3	pF
C_L Crystal load capacitance		15	16	17	pF

(1) Including aging and temperature dependency

AUDIO CLOCK CHARACTERISTICS

T_A = 25°C and VDD = 3.3 V, unless otherwise noted.

PARAMETER	TEST CONDITION	MIN	TYP	MAX	UNIT
MCLK Frequency range	Programmable using the PurePath Wireless Configurator [1]	$32 \cdot F_{WCLK}$		$512 \cdot F_{WCLK}$	
BCLK Frequency range	Programmable using the PurePath Wireless Configurator [1]	$32 \cdot F_{WCLK}$		$256 \cdot F_{WCLK}$	
WCLK Frequency range		31.936		48.096	kHz
RMS jitter **(Output clocks)**	RMS period jitter for 1000 periods		80	200	ps

Copyright © 2010, Texas Instruments Incorporated

SPI INTERFACE CHARACTERISTICS

T_A = 25°C and VDD = 3.3 V, unless otherwise noted.

PARAMETER	TEST CONDITION	MIN	TYP	MAX	UNIT
SCLK frequency		0		20	MHz
SCLK low		25			ns
SCLK high		25			ns
CSN high	Minimum time CSN must be high, if brought high, between commands (it is not necessary to bring CSN high between commands).	50			ns
CSN falling edge to SCLK rising edge	Distance from CSN asserted until first rising edge on SCLK.	25			ns
SCLK falling edge to CSN rising edge	Distance from last negative edge of SCLK in last word until CSN can be de-asserted.	100			ns
Inter-word spacing	Minimum distance in time from rising edge of SCLK for last bit in word *n* and the rising edge of SCLK for the first bit in word *n*+1. Properly handles abutting words.	50			ns
Hysteresis on SCLK	Hysteresis around trigger point of input buffer using a Schmitt trigger		100		mV
Slew rate on SCLK	Slew rate from 0.1·IOVDD to 0.9·IOVDD	10			V/µs

VBAT CHARACTERISTICS

T_A = 25°C and VDD = 3.3 V, unless otherwise noted.

PARAMETER	TEST CONDITIONS	Min	Max	Unit
Input voltage		0	4.5	V

FLASH CHARACTERISTICS

T_A = 25°C and VDD = 3.3 V, unless otherwise noted.

PARAMETER	TEST CONDITIONS	Min	TYP	Max	Unit
Program/erase endurance				1000	Cycles

Copyright © 2010, Texas Instruments Incorporated

1 PIN DESCRIPTION

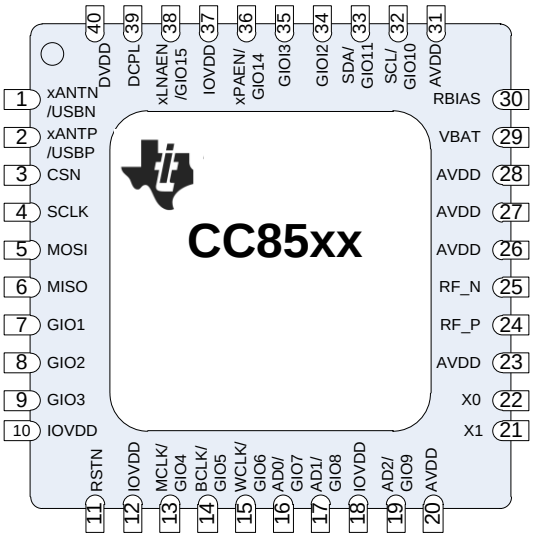

Figure 1 - CC85xx QFN-40 PIN CONFIGURATION

PIN	PIN NAME	PIN TYPE	DESCRIPTION
-	GND	Ground	The exposed die attach pad must be connected to a solid ground plane underneath the chip
1	xANTN USBN	Digital I/O[1]	CC85x0 Slaves: External antenna switch control CC85x1: USB D- data line
2	xANTP USBP	Digital I/O[1]	CC85x0 Slaves: External antenna switch control CC85x1: USB D+ data line
3	CS_N	Digital Input (pull-up)	Serial SPI configuration interface, active low chip select
4	SCLK	Digital I/O[1]	Serial SPI configuration interface, clock input/output
5	MOSI	Digital I/O[1]	Serial SPI configuration interface, master data output, slave data input
6	MISO	Digital I/O[1]	Serial SPI configuration interface, master data input, slave data output.
7	GIO1	Digital I/O[1]	General-purpose digital I/O pin 1 Configurable with PurePath™ Wireless Configurator
8	GIO2	Digital I/O[1]	General-purpose digital I/O pin 2
9	GIO3	Digital I/O[2]	General-purpose digital I/O pin 3 Configurable with PurePath™ Wireless Configurator
10	IOVDD	Power (I/O pads)	Digital power supply for the digital I/Os in the SPI interface and GIO1-GIO3.
11	RSTN	Digital Input (pull-up)	Active-low device reset
12	IOVDD	Power (I/O pins)	Digital power supply for the RSTN and MCLK digital I/O pins.
13	MCLK GIO4	Digital I/O[1]	Master clock output for external audio devices General-purpose digital I/O pin 4

Copyright © 2010, Texas Instruments Incorporated

PIN	PIN NAME	PIN TYPE	DESCRIPTION
14	BCLK GIO5	Digital I/O[1]	I2S/DSP audio interface bit clock (in/out) General-purpose digital I/O pin 5
15	WCLK GIO6	Digital I/O[1]	I2S/DSP audio interface word clock (in/out) General-purpose digital I/O pin 6
16	AD0 GIO7	Digital I/O[1]	I2S/DSP audio interface data line 0 (in/out) General-purpose digital I/O pin 7
17	AD1 GIO8	Digital I/O[1]	I2S/DSP audio interface data line 1 (in/out) General-purpose digital I/O pin 8
18	IOVDD	Power (I/O pins)	Digital power supply for the digital I/Os in audio interface (BCLK-AD2).
19	AD2 GIO9	Digital I/O[2]	I2S/DSP audio interface data line 2 (in/out) Configurable with PurePath™ Wireless Configurator
20	AVDD	Power (Analog)	2.0-3.6V analog power supply connection
21	X1	Analog I/O	Crystal oscillator pin input, or external clock input (48 MHz)
22	X0	Analog I/O	Crystal oscillator pin output (48 MHz)
23	AVDD	Power (Analog)	Analog power supply connection
24	RF_P	RF I/O	Positive differential RF input signal to LNA in receive mode Positive differential RF output signal from PA in transmit mode
25	RF_N	RF I/O	Negative differential RF input signal to LNA in receive mode Negative differential RF output signal from PA in transmit mode
26	AVDD	Power (Analog)	Analog power supply connection
27	AVDD	Power (Analog)	Analog power supply connection
28	AVDD	Power (Analog)	Analog power supply connection
29	VBAT	Analog input	Battery voltage supervisor (threshold level programmable by external resistor to positive battery terminal)
30	RBIAS	Analog output	External precision bias resistor for reference current. 56 kΩ, ±1%
31	AVDD	Power (Analog)	Analog power supply connection (Guard ring AVDD connection for digital noise isolation)
32	SCL GIO10	Digital I/O[1]	I2C master clock line. Must be connected to external pull-up General-purpose digital I/O pin 10
33	SDA GIO11	Digital I/O[1]	I2C master data line. Must be connected to external pull-up General-purpose digital I/O pin 11
34	GIO12	Digital I/O[1]	General-purpose digital I/O pin 12
35	GIO13	Digital I/O[1]	General-purpose digital I/O pin 13
36	xPAEN GIO14	Digital I/O[2]	Control external PA General-purpose digital I/O pin 14
37	IOVDD	Power (I/O pads)	Digital power supply for SCL-GIO15 pins.
38	xLNAEN GIO15	Digital I/O[2]	Control external LNA General-purpose digital I/O pin 15
39	DCPL	Power (Digital)	1.7V-1.85 V linear voltage regulator output to which a 1 uF decoupling capacitor should be attached. For test-purposes an external digital supply voltage (1.62-1.98 V) can be applied here, bypassing the voltage regulator. NOTE: The voltage regulator is intended for use with the CC85xx chip only. It cannot be used to provide supply voltage to other devices.
40	DVDD	Power (Digital)	Digital power supply for the linear voltage regulator.

[1] Digital I/O pad with 4 mA source/sink capability.
[2] Digital I/O pad with 20 mA source/sink capability.

Copyright © 2010, Texas Instruments Incorporated

2 APPLICATION CIRCUIT

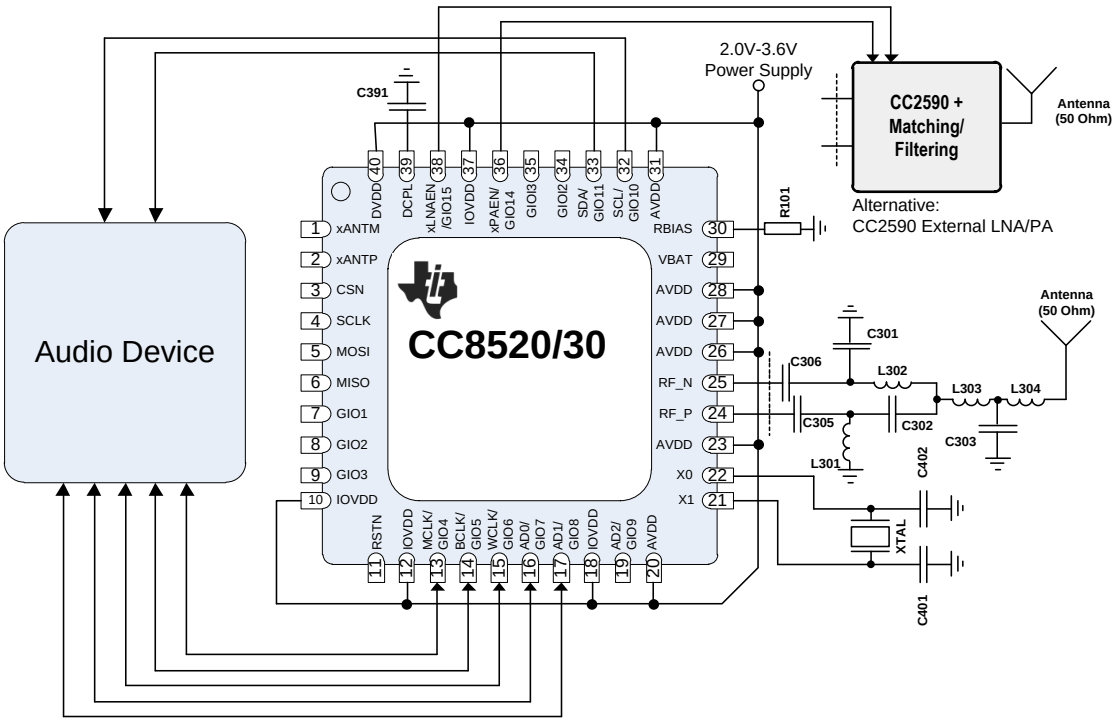

Figure 2 - CC8520/CC8530 Application Circuit

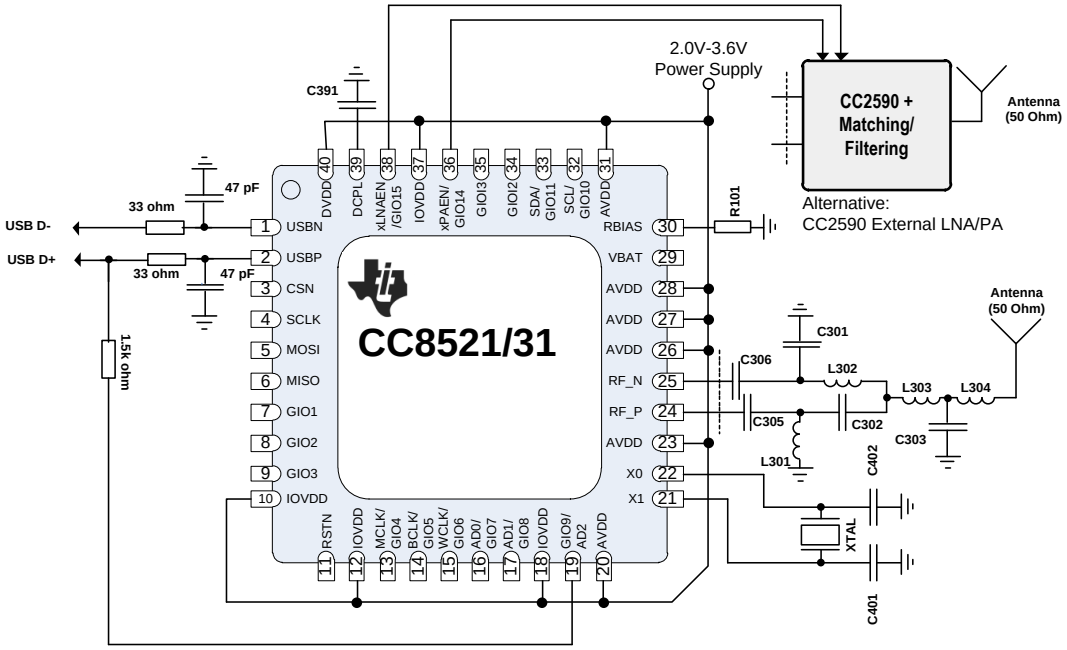

Figure 3 - CC8521/CC8531 Application Circuit

Copyright © 2010, Texas Instruments Incorporated

3 SYSTEM DESCRIPTION

By employing proprietary technology, referred to as PurePath Wireless, the CC85xx device family provides robust, high-quality, short-range 2.4 GHz wireless digital audio streaming in low-cost single chip solutions.

Two or more devices form a PurePath Wireless audio network. Great care has been taken to ensure that this audio network provides gap-less and robust audio streaming in varied environments and that it can coexist amicably with existing wireless technologies in the crowded 2.4 GHz ISM band.

Most applications can be implemented without any software development and only require the CC85xx to be connected to an external audio source or sink (such as an audio codec, S/PDIF interface or class-D amplifier) and a few push buttons, switches or LED for human interaction. Advanced applications can interface a host processor or DSP directly to the CC85xx and directly stream audio and control most aspects of device and audio network operation. The complete list of supported audio devices can be found in the PurePath Wireless Configurator [1].

The PurePath Wireless Configurator [1], a PC-based configuration tool, is used to set up the desired functionality and parameters of the target system and then produces firmware images that subsequently must be programmed into the embedded flash memory of each CC85xx.

All devices in the CC85xx family interface seamlessly with the CC2590 RF range extender device to allow for even wider RF coverage and improved robustness in difficult environments.

4 DOCUMENT HISTORY

Revision	Date	Description/Changes
SWRS091F	June 2012	Added 2 Mbit mode (throughout document) and flash endurance numbers. Lowered minimum latency. Added support for 24 bit data width . Updated pin description.
SWRS091E	Dec 2011	Added VBAT voltage info
SWRS091D	July 2011	Added info on CC8521 and CC8531
SWRS091C	March 2011	Added info on CC8530. Updated current consumption numbers and how they are measured. Storage temperature updated. Info on supported codecs now in PurePath Wireless Configurator.
SWRS091B	Sept 2010	Add RF Characteristics for CC8520+CC2590EM. Moved the sections; Network topology, Coexistence, Audio Interface, Human Interaction drivers and external host interface to the **CC85xx Family User's Guide [2].** Updated pin-out table and fig 1.
SWRS091A	March 2010	First release

5 REFERENCES

[1] PurePath™ Wireless Configurator

[2] CC85xx Family User Guide

[3] CC-Debugger

[4] CC2590 Product folder

Copyright © 2010, Texas Instruments Incorporated

PACKAGING INFORMATION

Orderable part number	Status (1)	Material type (2)	Package | Pins	Package qty | Carrier	RoHS (3)	Lead finish/ Ball material (4)	MSL rating/ Peak reflow (5)	Op temp (°C)	Part marking (6)
CC8520RHAR	Active	Production	VQFN (RHA) | 40	2500 | LARGE T&R	Yes	NIPDAU	Level-3-260C-168 HR	-40 to 85	CC8520
CC8520RHAR.B	Active	Production	VQFN (RHA) | 40	2500 | LARGE T&R	Yes	NIPDAU	Level-3-260C-168 HR	-40 to 85	CC8520
CC8520RHAT	Active	Production	VQFN (RHA) | 40	250 | SMALL T&R	Yes	NIPDAU	Level-3-260C-168 HR	-40 to 85	CC8520
CC8520RHAT.B	Active	Production	VQFN (RHA) | 40	250 | SMALL T&R	Yes	NIPDAU	Level-3-260C-168 HR	-40 to 85	CC8520
CC8521RHAR	Active	Production	VQFN (RHA) | 40	2500 | LARGE T&R	Yes	NIPDAU	Level-3-260C-168 HR	-40 to 85	CC8521
CC8521RHAR.B	Active	Production	VQFN (RHA) | 40	2500 | LARGE T&R	Yes	NIPDAU	Level-3-260C-168 HR	-40 to 85	CC8521
CC8521RHAT	Active	Production	VQFN (RHA) | 40	250 | SMALL T&R	Yes	NIPDAU	Level-3-260C-168 HR	-40 to 85	CC8521
CC8521RHAT.B	Active	Production	VQFN (RHA) | 40	250 | SMALL T&R	Yes	NIPDAU	Level-3-260C-168 HR	-40 to 85	CC8521
CC8530RHAR	Active	Production	VQFN (RHA) | 40	2500 | LARGE T&R	Yes	NIPDAU	Level-3-260C-168 HR	-40 to 85	CC8530
CC8530RHAR.B	Active	Production	VQFN (RHA) | 40	2500 | LARGE T&R	Yes	NIPDAU	Level-3-260C-168 HR	-40 to 85	CC8530
CC8530RHAT	Active	Production	VQFN (RHA) | 40	250 | SMALL T&R	Yes	NIPDAU	Level-3-260C-168 HR	-40 to 85	CC8530
CC8530RHAT.B	Active	Production	VQFN (RHA) | 40	250 | SMALL T&R	Yes	NIPDAU	Level-3-260C-168 HR	-40 to 85	CC8530
CC8531RHAR	Active	Production	VQFN (RHA) | 40	2500 | LARGE T&R	Yes	NIPDAU	Level-3-260C-168 HR	-40 to 85	CC8531
CC8531RHAR.B	Active	Production	VQFN (RHA) | 40	2500 | LARGE T&R	Yes	NIPDAU	Level-3-260C-168 HR	-40 to 85	CC8531
CC8531RHARG4	Active	Production	VQFN (RHA) | 40	2500 | LARGE T&R	Yes	NIPDAU	Level-3-260C-168 HR	-40 to 85	CC8531
CC8531RHARG4.B	Active	Production	VQFN (RHA) | 40	2500 | LARGE T&R	Yes	NIPDAU	Level-3-260C-168 HR	-40 to 85	CC8531
CC8531RHAT	Active	Production	VQFN (RHA) | 40	250 | SMALL T&R	Yes	NIPDAU	Level-3-260C-168 HR	-40 to 85	CC8531
CC8531RHAT.B	Active	Production	VQFN (RHA) | 40	250 | SMALL T&R	Yes	NIPDAU	Level-3-260C-168 HR	-40 to 85	CC8531

(1) **Status:** For more details on status, see our product life cycle.

(2) **Material type:** When designated, preproduction parts are prototypes/experimental devices, and are not yet approved or released for full production. Testing and final process, including without limitation quality assurance, reliability performance testing, and/or process qualification, may not yet be complete, and this item is subject to further changes or possible discontinuation. If available for ordering, purchases will be subject to an additional waiver at checkout, and are intended for early internal evaluation purposes only. These items are sold without warranties of any kind.

(3) **RoHS values:** Yes, No, RoHS Exempt. See the TI RoHS Statement for additional information and value definition.

(4) **Lead finish/Ball material:** Parts may have multiple material finish options. Finish options are separated by a vertical ruled line. Lead finish/Ball material values may wrap to two lines if the finish value exceeds the maximum column width.

(5) **MSL rating/Peak reflow:** The moisture sensitivity level ratings and peak solder (reflow) temperatures. In the event that a part has multiple moisture sensitivity ratings, only the lowest level per JEDEC standards is shown. Refer to the shipping label for the actual reflow temperature that will be used to mount the part to the printed circuit board.

(6) **Part marking:** There may be an additional marking, which relates to the logo, the lot trace code information, or the environmental category of the part.

Multiple part markings will be inside parentheses. Only one part marking contained in parentheses and separated by a "~" will appear on a part. If a line is indented then it is a continuation of the previous line and the two combined represent the entire part marking for that device.

Important Information and Disclaimer: The information provided on this page represents TI's knowledge and belief as of the date that it is provided. TI bases its knowledge and belief on information provided by third parties, and makes no representation or warranty as to the accuracy of such information. Efforts are underway to better integrate information from third parties. TI has taken and continues to take reasonable steps to provide representative and accurate information but may not have conducted destructive testing or chemical analysis on incoming materials and chemicals. TI and TI suppliers consider certain information to be proprietary, and thus CAS numbers and other limited information may not be available for release.

In no event shall TI's liability arising out of such information exceed the total purchase price of the TI part(s) at issue in this document sold by TI to Customer on an annual basis.

TAPE AND REEL INFORMATION

REEL DIMENSIONS

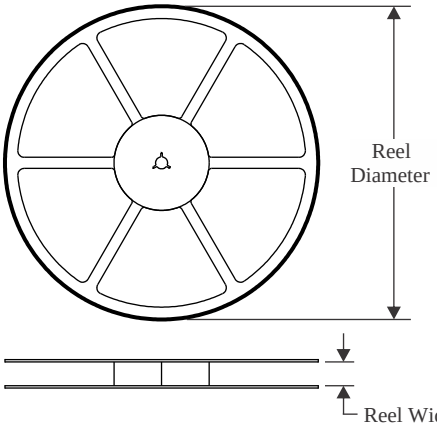

TAPE DIMENSIONS

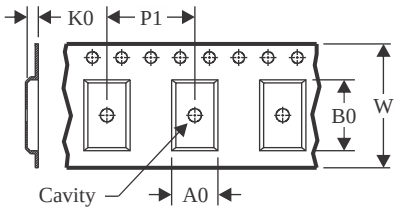

A0	Dimension designed to accommodate the component width
B0	Dimension designed to accommodate the component length
K0	Dimension designed to accommodate the component thickness
W	Overall width of the carrier tape
P1	Pitch between successive cavity centers

QUADRANT ASSIGNMENTS FOR PIN 1 ORIENTATION IN TAPE

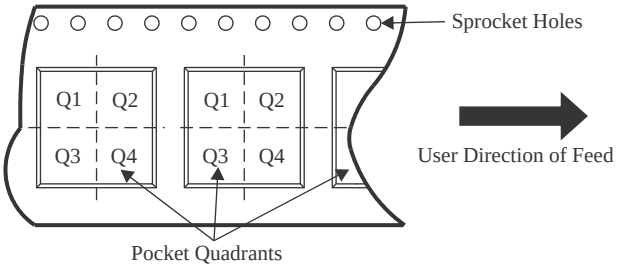

*All dimensions are nominal

Device	Package Type	Package Drawing	Pins	SPQ	Reel Diameter (mm)	Reel Width W1 (mm)	A0 (mm)	B0 (mm)	K0 (mm)	P1 (mm)	W (mm)	Pin1 Quadrant
CC8520RHAR	VQFN	RHA	40	2500	330.0	16.4	6.3	6.3	1.1	12.0	16.0	Q2
CC8520RHAT	VQFN	RHA	40	250	180.0	16.4	6.3	6.3	1.1	12.0	16.0	Q2
CC8521RHAR	VQFN	RHA	40	2500	330.0	16.4	6.3	6.3	1.1	12.0	16.0	Q2
CC8521RHAT	VQFN	RHA	40	250	180.0	16.4	6.3	6.3	1.1	12.0	16.0	Q2
CC8530RHAR	VQFN	RHA	40	2500	330.0	16.4	6.3	6.3	1.1	12.0	16.0	Q2
CC8530RHAT	VQFN	RHA	40	250	180.0	16.4	6.3	6.3	1.1	12.0	16.0	Q2
CC8531RHAR	VQFN	RHA	40	2500	330.0	16.4	6.3	6.3	1.1	12.0	16.0	Q2
CC8531RHARG4	VQFN	RHA	40	2500	330.0	16.4	6.3	6.3	1.1	12.0	16.0	Q2
CC8531RHAT	VQFN	RHA	40	250	180.0	16.4	6.3	6.3	1.1	12.0	16.0	Q2

TAPE AND REEL BOX DIMENSIONS

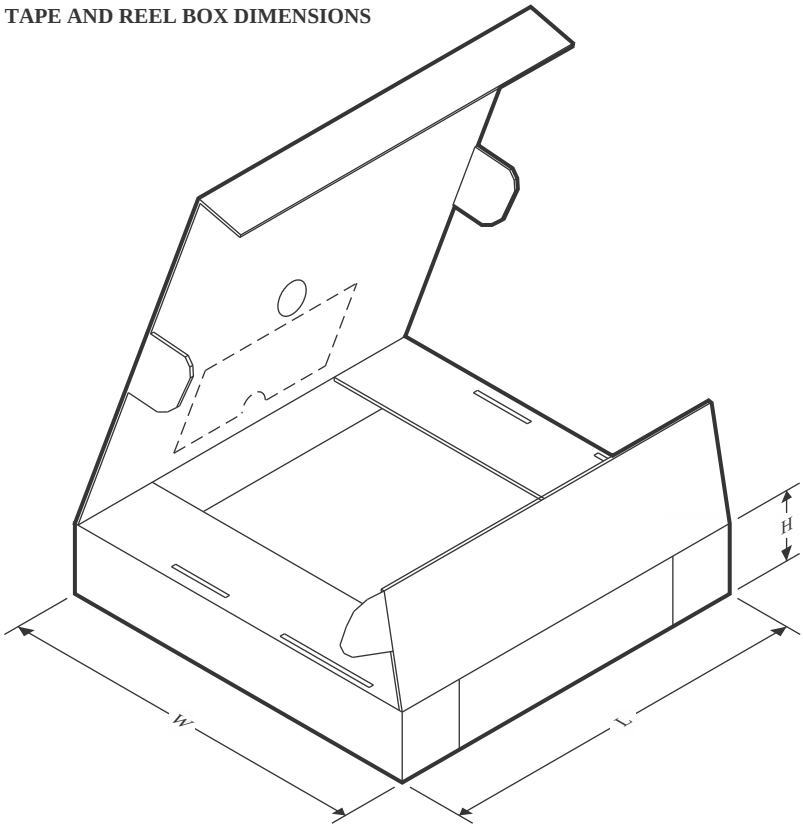

*All dimensions are nominal

Device	Package Type	Package Drawing	Pins	SPQ	Length (mm)	Width (mm)	Height (mm)
CC8520RHAR	VQFN	RHA	40	2500	360.0	360.0	36.0
CC8520RHAT	VQFN	RHA	40	250	210.0	185.0	35.0
CC8521RHAR	VQFN	RHA	40	2500	367.0	367.0	35.0
CC8521RHAT	VQFN	RHA	40	250	210.0	185.0	35.0
CC8530RHAR	VQFN	RHA	40	2500	360.0	360.0	36.0
CC8530RHAT	VQFN	RHA	40	250	210.0	185.0	35.0
CC8531RHAR	VQFN	RHA	40	2500	360.0	360.0	36.0
CC8531RHARG4	VQFN	RHA	40	2500	367.0	367.0	35.0
CC8531RHAT	VQFN	RHA	40	250	210.0	185.0	35.0

GENERIC PACKAGE VIEW

RHA 40

VQFN - 1 mm max height

6 x 6, 0.5 mm pitch

PLASTIC QUAD FLATPACK - NO LEAD

This image is a representation of the package family, actual package may vary.
Refer to the product data sheet for package details.

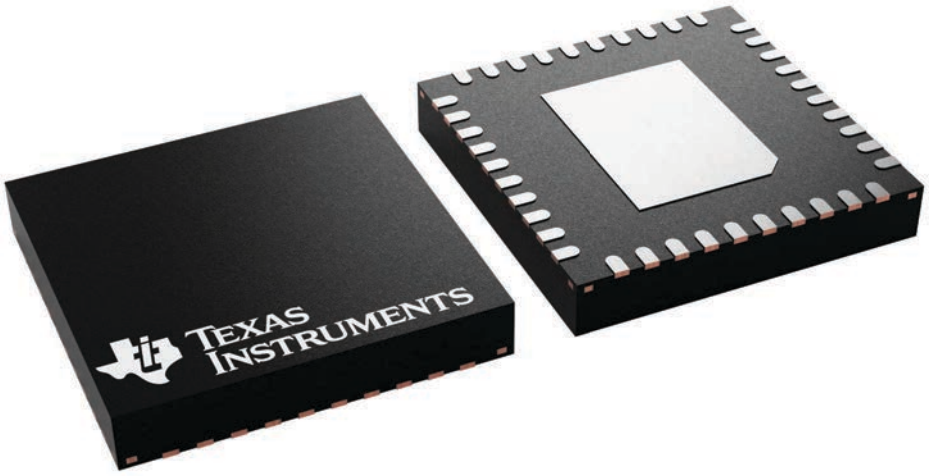

4225870/A

RHA0040H

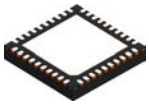

PACKAGE OUTLINE

VQFN - 1 mm max height

PLASTIC QUAD FLATPACK - NO LEAD

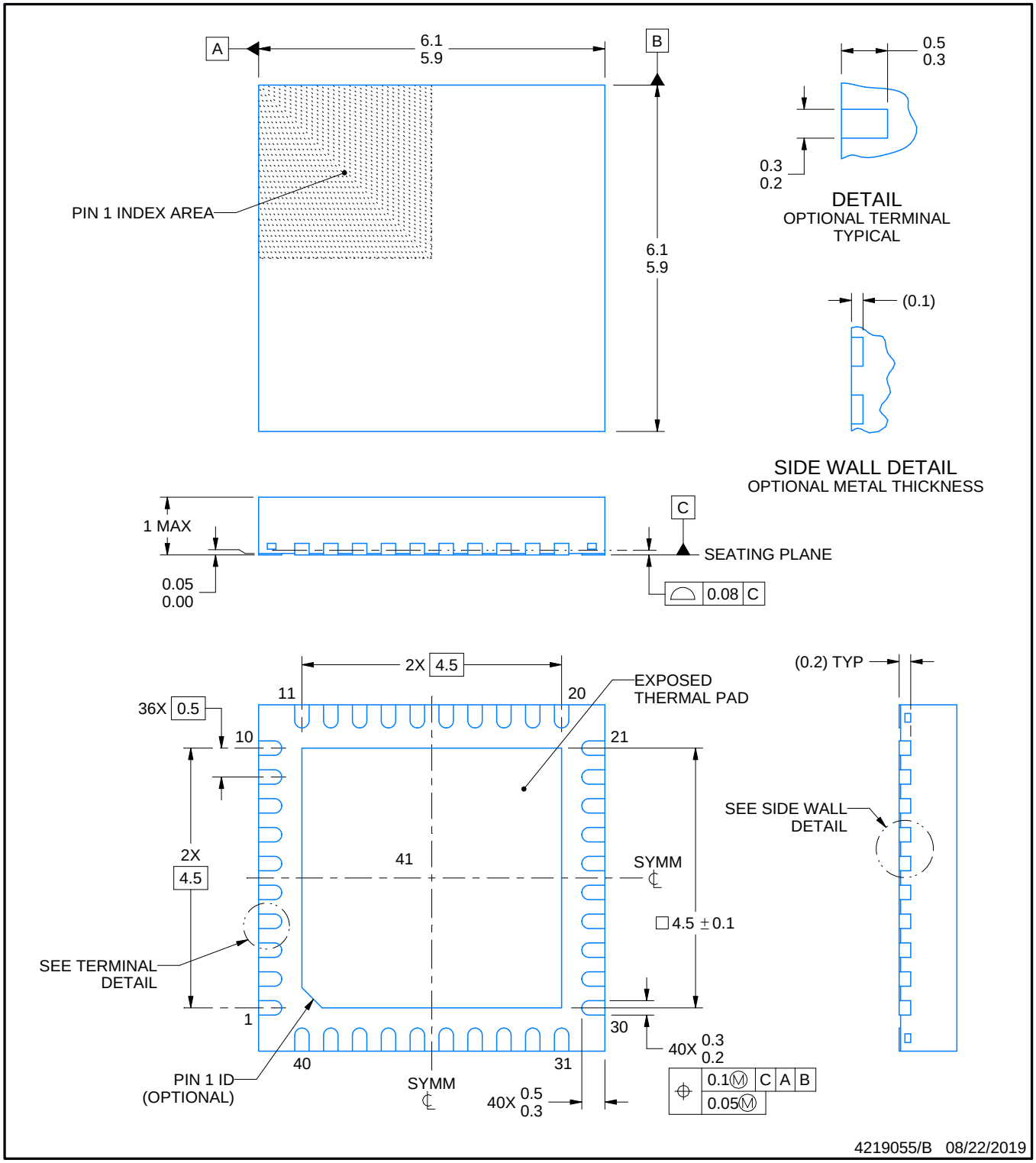

NOTES:

1. All linear dimensions are in millimeters. Any dimensions in parenthesis are for reference only. Dimensioning and tolerancing per ASME Y14.5M.
2. This drawing is subject to change without notice.
3. The package thermal pad must be soldered to the printed circuit board for thermal and mechanical performance.

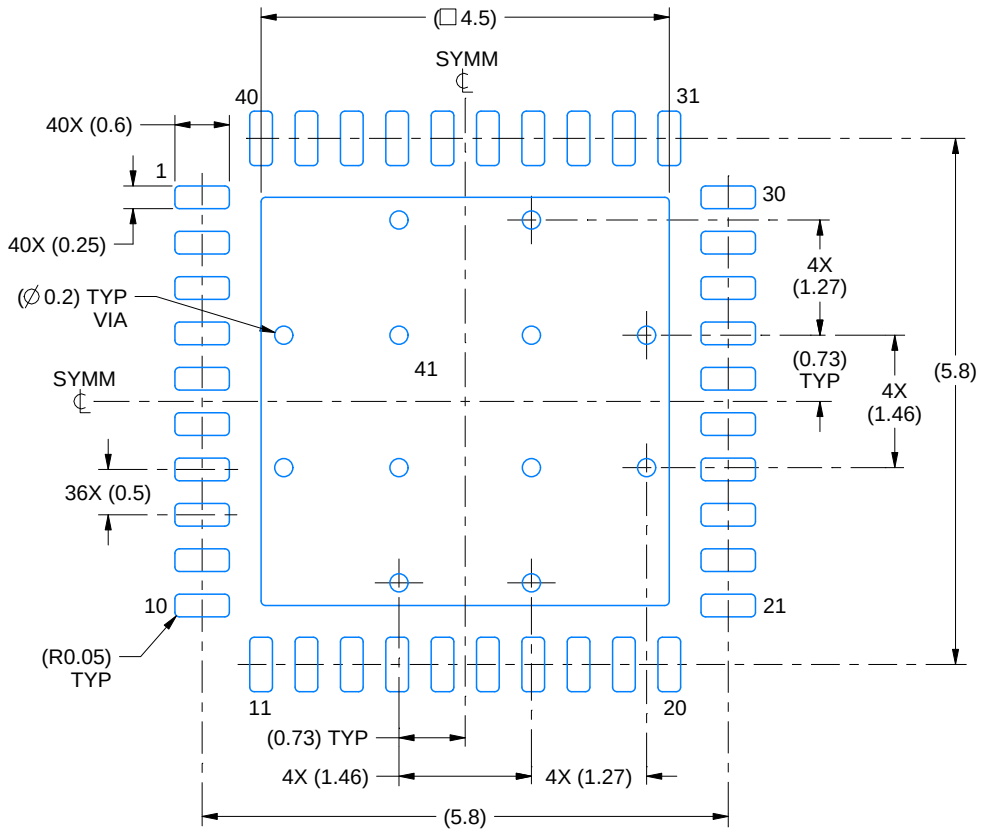

LAND PATTERN EXAMPLE
EXPOSED METAL SHOWN
SCALE:12X

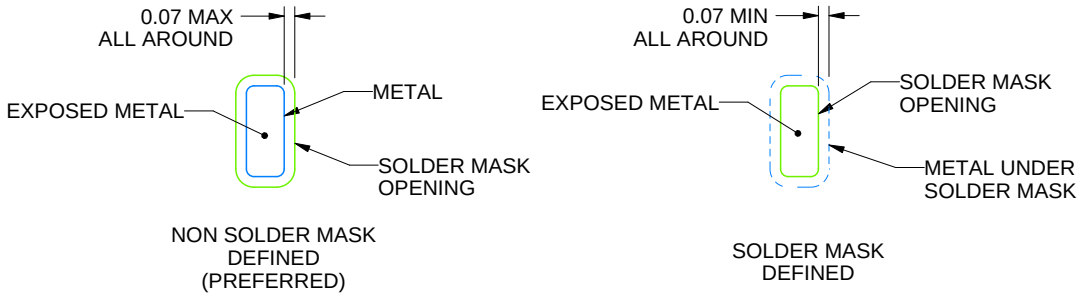

SOLDER MASK DETAILS

4219055/B 08/22/2019

NOTES: (continued)

4. This package is designed to be soldered to a thermal pad on the board. For more information, see Texas Instruments literature number SLUA271 (www.ti.com/lit/slua271).
5. Vias are optional depending on application, refer to device data sheet. If any vias are implemented, refer to their locations shown on this view. It is recommended that vias under paste be filled, plugged or tented.

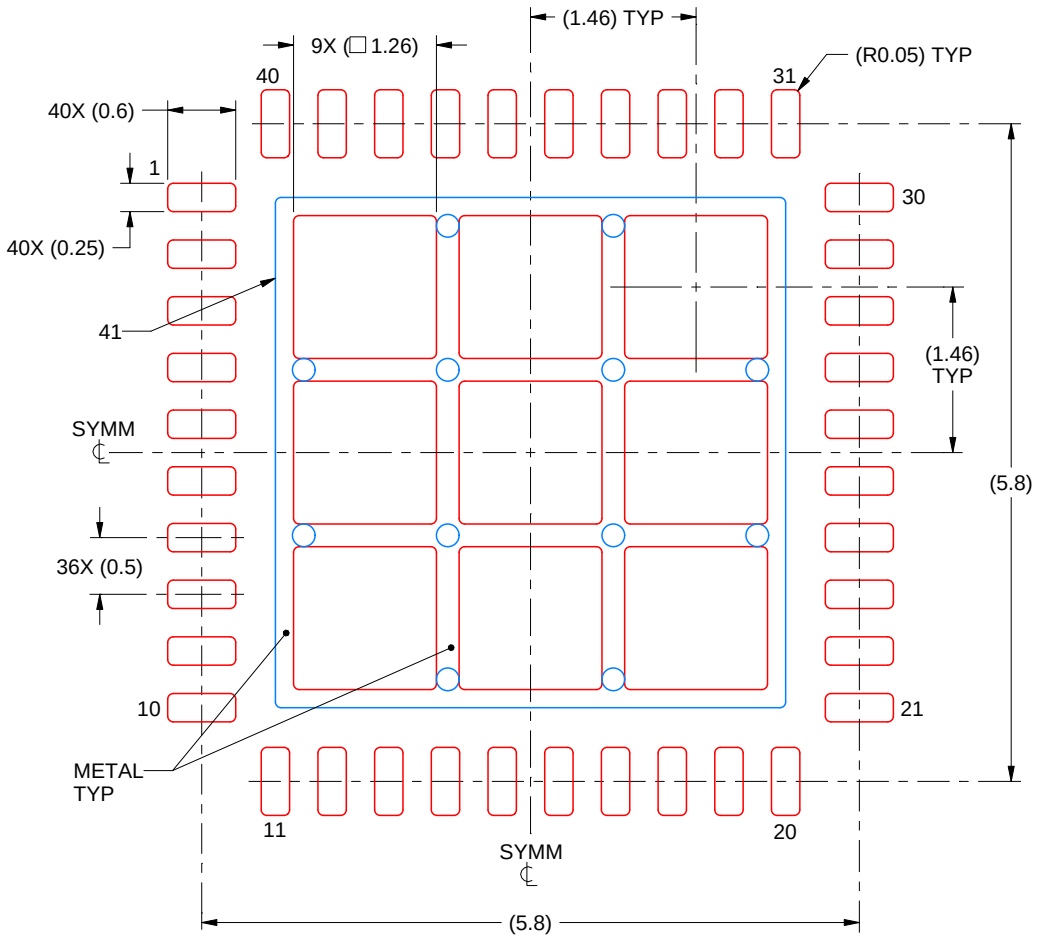

SOLDER PASTE EXAMPLE
BASED ON 0.125 mm THICK STENCIL

EXPOSED PAD 41:
70% PRINTED SOLDER COVERAGE BY AREA
SCALE:15X

4219055/B 08/22/2019

NOTES: (continued)

6. Laser cutting apertures with trapezoidal walls and rounded corners may offer better paste release. IPC-7525 may have alternate design recommendations.

IMPORTANT NOTICE AND DISCLAIMER

TI PROVIDES TECHNICAL AND RELIABILITY DATA (INCLUDING DATASHEETS), DESIGN RESOURCES (INCLUDING REFERENCE DESIGNS), APPLICATION OR OTHER DESIGN ADVICE, WEB TOOLS, SAFETY INFORMATION, AND OTHER RESOURCES “AS IS” AND WITH ALL FAULTS, AND DISCLAIMS ALL WARRANTIES, EXPRESS AND IMPLIED, INCLUDING WITHOUT LIMITATION ANY IMPLIED WARRANTIES OF MERCHANTABILITY, FITNESS FOR A PARTICULAR PURPOSE OR NON-INFRINGEMENT OF THIRD PARTY INTELLECTUAL PROPERTY RIGHTS.

These resources are intended for skilled developers designing with TI products. You are solely responsible for (1) selecting the appropriate TI products for your application, (2) designing, validating and testing your application, and (3) ensuring your application meets applicable standards, and any other safety, security, regulatory or other requirements.

These resources are subject to change without notice. TI grants you permission to use these resources only for development of an application that uses the TI products described in the resource. Other reproduction and display of these resources is prohibited. No license is granted to any other TI intellectual property right or to any third party intellectual property right. TI disclaims responsibility for, and you fully indemnify TI and its representatives against any claims, damages, costs, losses, and liabilities arising out of your use of these resources.

TI’s products are provided subject to TI’s Terms of Sale, TI’s General Quality Guidelines, or other applicable terms available either on ti.com or provided in conjunction with such TI products. TI’s provision of these resources does not expand or otherwise alter TI’s applicable warranties or warranty disclaimers for TI products. Unless TI explicitly designates a product as custom or customer-specified, TI products are standard, catalog, general purpose devices.

TI objects to and rejects any additional or different terms you may propose.

Copyright © 2026, Texas Instruments Incorporated

Last updated 10/2025