CC330x SimpleLink™ Wi-Fi 6 and Bluetooth® Low Energy Companion IC

1 Features

Key Features

- Wi-Fi 6 (802.11ax)
- Bluetooth® Low Energy 5.4 in CC3301 devices
- Companion IC to any processor or MCU host capable of running a TCP/IP stack
- Integrated 2.4GHz PA for a complete wireless solution with up to +20.5dBm output power.
- Operating temperature: –40°C to +105°C
- Application throughput up to 50Mbps

Extended Features

- Wi-Fi 6
  - 2.4GHz, 20MHz, single spatial stream
  - MAC, baseband, and RF transceiver with support for IEEE 802.11 a/b/g/n/ax
  - OFDMA, trigger frame, MU-MIMO (downlink), basic service set coloring, and target wake time (TWT) for improved efficiency
  - Hardware-based encryption and decryption supporting WPA2 and WPA3
  - Excellent interoperability
  - Support for 4-bit SDIO or SPI host interfaces
- Bluetooth Low Energy 5.4
  - LE coded PHYs (long range), LE 2M PHY (high speed), and advertising extension
  - Host controller interface (HCI) transport with option for UART or shared SDIO
- Enhanced security
  - Secured host interface
  - Firmware authentication
  - Anti-rollback protection
- Multirole support (for example, concurrent STA and AP) to connect with Wi-Fi devices on different RF channels (Wi-Fi networks)
- Optional antenna diversity or selection
- 3-wire or 1-wire PTA for external coexistence with additional 2.4GHz radios (for example, Thread or Zigbee)
- Power management
  - V_{MAIN}, V_{IO}, V_{pp}: 1.8V
  - V_{PA}: 3.3V
- Clock sources
  - 40MHz XTAL fast clock
  - Internal slow clock or external 32.768kHz slow clock
- Small package size
  - Easy to design with 40-pin, 5mm × 5mm quad flat no-leaded (QFN) package, 0.4mm pitch

2 Applications

- Grid infrastructure
  - Electricity meter
  - String inverter
  - Micro inverter
  - Energy storage power conversion system (PCS)
  - EV charging infrastructure
- Building and home automation
  - HVAC controller
  - HVAC gateway
  - Thermostat
  - Building security gateway
  - Garage door system
  - IP network camera and video doorbell
  - Wireless security camera
- Appliances
  - Refrigerator and freezer
  - Oven
  - Washer and dryer
  - Residential water heater and heating system
  - Air purifier and humidifier
  - Coffee machine
  - Air conditioner indoor unit
  - Vacuum robot
  - Robotic lawn mower
- Medical
  - Infusion pump
  - Electronic hospital bed and bed control
  - Multiparameter patient monitor
  - Blood pressure monitor
  - CPAP machine
  - Telehealth systems
  - Ultrasound scanner
  - Ultrasound smart probe
  - Electric toothbrush
- Retail automation and payment
- Printers

An IMPORTANT NOTICE at the end of this data sheet addresses availability, warranty, changes, use in safety-critical applications, intellectual property matters and other important disclaimers. PRODUCTION DATA.

3 Description

The SimpleLink™ Wi-Fi™ CC33xx family of devices is where affordability meets reliability, enabling engineers to connect more applications with confidence. CC33xx are single-chip Wi-Fi 6 and Bluetooth Low Energy 5.4 devices. The CC3300 and CC3301 are the first dual-band devices in this pin-to-pin compatible family.

- CC3300 : A 2.4GHz Wi-Fi 6 companion IC
- CC3301 : A 2.4GHz Wi-Fi 6 and Bluetooth Low Energy 5.4 companion IC

The CC330x offers Wi-Fi 6 and BLE while maintaining compatibility with Wi-Fi 4 (802.11 a/b/g/n) and Wi-Fi 5 (802.11ac). These CC330x devices are the 10th-generation connectivity combination chip from Texas Instruments. As such, the CC330x is based on proven technology. These devices are ideal for cost-sensitive embedded applications with a Linux® or RTOS host running TCP/IP. CC330x brings the efficiency of Wi-Fi 6 to embedded device applications for the Internet of Things (IoT) with a small PCB footprint and a highly optimized bill of materials.

Device Information

PART NUMBER(1)	WI-FI 2.4 SISO	BLUETOOTH LOW ENERGY
CC3300ENJARSBR	✓	
CC3301ENJARSBR	✓	✓

(1) For more information, see the *Mechanical, Packaging, and Orderable* addendum.

Copyright © 2025 Texas Instruments Incorporated

4 System Diagram

Figure 4-1 shows a basic system diagram for the CC3301.

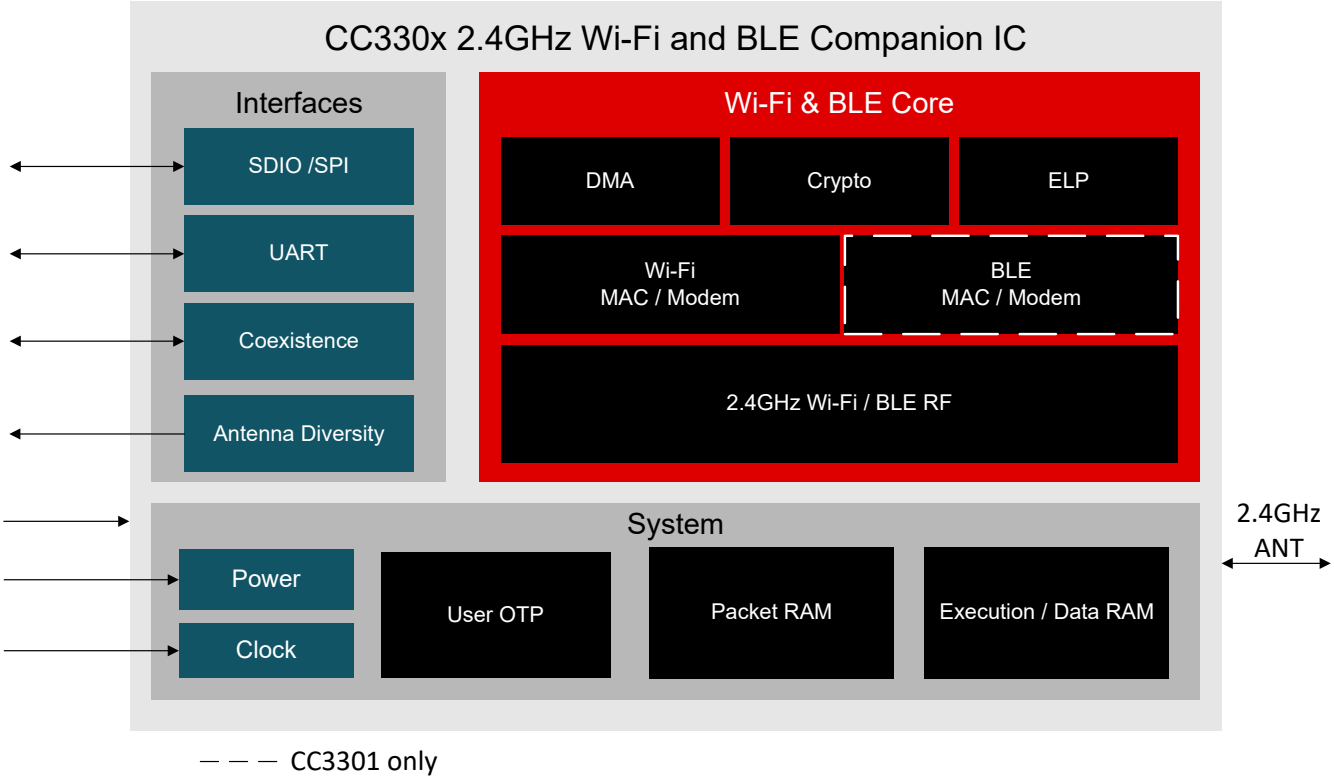

Figure 4-1. CC3301 High-Level System Diagram

Table of Contents

1 Features....1
2 Applications....1
3 Description....2
4 System Diagram....3
5 Pin Configuration and Functions....5
5.1 Pin Diagram....5
5.2 Pin Attributes....6
6 Specifications....8
6.1 Absolute Maximum Ratings....8
6.2 ESD Ratings....8
6.3 Recommended Operating Conditions....8
6.4 Electrical Characteristics....9
6.5 Thermal Resistance Characteristics....9
6.6 WLAN Performance: 2.4GHz Receiver Characteristics....9
6.7 WLAN Performance: 2.4GHz Transmitter Power....10
6.8 BLE Performance: Receiver Characteristics....10
6.9 BLE Performance: Transmitter Characteristics....12
6.10 Current Consumption: WLAN Static Modes....12
6.11 Current Consumption: 2.4GHz WLAN Use Cases....12
6.12 Current Consumption: BLE Static Modes....12
6.13 Current Consumption: BLE Use Cases....13
6.14 Current Consumption: Device Modes....13
6.15 Timing and Switching Characteristics....13
6.16 Interface Timing Characteristics....14
7 Detailed Description....19
7.1 WLAN Features....19
7.2 Bluetooth Low Energy Features....19
8 Applications, Implementation, and Layout....20
9 Device and Documentation Support....21
9.1 Third-Party Products Disclaimer....21
9.2 Device Nomenclature Boilerplate....21
9.3 Tools and Software....22
9.4 Documentation Support....22
9.5 Support Resources....23
9.6 Trademarks....23
9.7 Electrostatic Discharge Caution....23
9.8 Glossary....23
10 Revision History....23
11 Mechanical, Packaging, and Orderable Information....24

Copyright © 2025 Texas Instruments Incorporated

5 Pin Configuration and Functions

5.1 Pin Diagram

Figure 5-1 shows pin assignments for the 40-pin WQFN package.

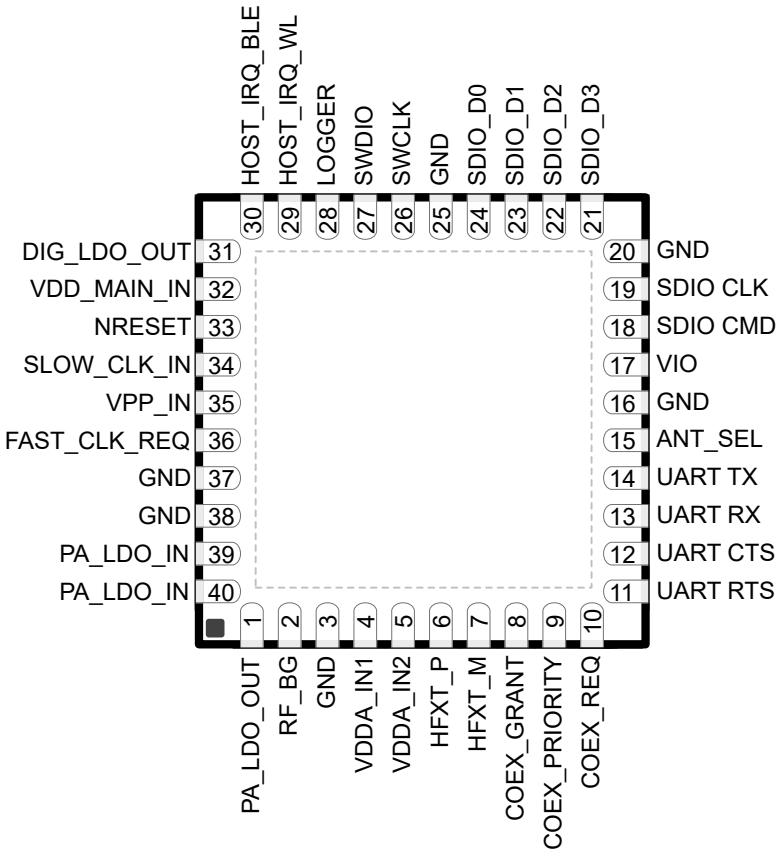

Figure 5-1. CC3301 Pin Diagram

5.2 Pin Attributes

Table 5-1. Pin Attributes

PIN	SIGNAL NAME	TYPE	DIR (I/O)	VOLTAGE LEVEL	SHUTDOWN STATE [1]	STATE AFTER POWER-UP	DESCRIPTION
1	PA_LDO_OUT	Analog					RF power amplifier LDO output
2	RF_BG	RF	I/O				Bluetooth Low Energy and WLAN 2.4GHz RF port
3	GND	GND					GND
4	VDDA_IN1	POW					1.8V supply for analog domain
5	VDDA_IN2	POW					1.8V supply for analog domain
6	HFXT_P	Analog		Sine			XTAL_P
7	HFXT_M	Analog					XTAL_N
8	COEX_GRANT [2]	Digital	O	V_{IO}	PD	PD	External coexistence interface - grant
9	COEX_PRIORITY [2]	Digital	I	V_{IO}	PU	PU	External coexistence interface - priority
10	COEX_REQ [2]	Digital	I	V_{IO}	PU	PU	External coexistence interface - request
11	UART RTS	Digital	O	V_{IO}	PU	PU	Device RTS signal - flow control for BLE HCI
12	UART CTS	Digital	I	V_{IO}	PU	PU	Device CTS signal - flow control for BLE HCI
13	UART RX	Digital	I	V_{IO}	PU	PU	UART RX for BLE HCI
14	UART TX	Digital	O	V_{IO}	PU	PU	UART TX for BLE HCI
15	ANT_SEL [2]	Digital	O	V_{IO}	PD	PD	Antenna select control line
16	GND	GND					GND
17	VIO	POW					1.8V IO supply
18	SDIO CMD	Digital	I/O	V_{IO}	HiZ	HiZ	SDIO command or SPI PICO
19	SDIO CLK	Digital	I	V_{IO}	HiZ	HiZ	SDIO clock or SPI clock
20	GND	GND					GND
21	SDIO D3	Digital	I/O	V_{IO}	HiZ	PU	SDIO data D3 or SPI CS
22	SDIO D2	Digital	I/O	V_{IO}	HiZ	HiZ	SDIO data D2
23	SDIO D1	Digital	I/O	V_{IO}	HiZ	HiZ	SDIO data D1
24	SDIO D0	Digital	I/O	V_{IO}	HiZ	HiZ	SDIO data D0 or SPI POCI
25	GND	GND					GND
26	SWCLK	Digital	I	V_{IO}	PD	PD	Serial wire debug clock
27	SWDIO	Digital	I/O	V_{IO}	PU	PU	Serial wire debug I/O
28	LOGGER [3]	Digital	O	V_{IO}	PU	PU	Tracer (UART TX debug logger)
29	HOST_IRQ_WL [3]	Digital	O	V_{IO}	PD	0	Interrupt request to host for WLAN
30	HOST_IRQ_BLE	Digital	O	V_{IO}	PD	PD	Reserved for future use
31	DIG_LDO_OUT	Analog	O				Digital LDO output to decoupling capacitor
32	VDD_MAIN_IN	POW					1.8V supply input for SRAM and digital

Copyright © 2025 Texas Instruments Incorporated

Table 5-1. Pin Attributes (continued)

PIN	SIGNAL NAME	TYPE	DIR (I/O)	VOLTAGE LEVEL	SHUTDOWN STATE [(1)]	STATE AFTER POWER-UP	DESCRIPTION
33	nRESET	Digital	I	V_{IO}	PD	PD	Reset line for enabling or disabling device (active low)
34	SLOW_CLK_IN	Digital	I	V_{IO}	PD	PD	32.768kHz RTC clock input
35	VPP_IN	POW					1.8V OTP programming input supply
36	FAST_CLK_REQ	Digital	O	V_{IO}	PD	PD	Fast clock request from the device
37	GND	GND					GND
38	GND	GND					GND
39	PA_LDO_IN	POW					3.3V supply for PA
40	PA_LDO_IN	POW					3.3V supply for PA

(1) All digital I/Os (with the exception of SDIO signals) are Hi-Z when the device is in Shutdown mode with internal PU/PD according to the "SHUTDOWN STATE" column.
(2) See software release notes for the support level.
(3) LOGGER and HOST_IRQ_WL pins are sensed by the device during boot, see *CC33xx Hardware Integration*.

6 Specifications

All specifications are given at the CC330x pins. Typical values are measured with a nominal device at 25°C.

6.1 Absolute Maximum Ratings

Over operating free-air temperature range (unless otherwise noted)[1]

PARAMETER		PINS	MIN	MAX	UNIT
V_{PA}	V_{DD} PA Voltage	39,40	–0.5	4.2[2]	V
V_{MAIN}	Main supply voltage for analog and digital - VDD_MAIN_IN, VDDA_IN1, VDDA_IN2	32, 4, 5	–0.5	2.1	V
V_{IO}	VDD IO Voltage	17	–0.5	2.1	V
	Input Voltage to all digital pins		–0.5	V_{IO} + 0.5	V
	HFXT_P Input Voltage	6	–0.5	2.1	V
V_{PP}	VPP OTP Voltage	35	–0.5	2.1	V
T_A	Operating Ambient Temperature		–40	105	°C
T_{stg}	Storage temperature		–55	155	°C

(1) Operation outside the Absolute Maximum Ratings may cause permanent device damage. Absolute Maximum Ratings do not imply functional operation of the device at these or any other conditions beyond those listed under Recommended Operating Conditions. If outside the Recommended Operating Conditions but within the Absolute Maximum Ratings, the device may not be fully functional, and this may affect device reliability, functionality, performance, and shorten the device lifetime.
(2) Above 85°C, conditions beyond those indicated under *Recommended Operating Conditions* may cause permanent damage.

6.2 ESD Ratings

				VALUE	UNIT
$V_{(ESD)}$	Electrostatic discharge	Human body model (HBM), per ANSI/ESDA/JEDEC JS-001[1]	RF pins	±1000	V
			Other pins	±2000	
		Charged device model (CDM), per ANSI/ESDA/JEDEC JS-002[2]	RF pins	±250	
			Other pins	±500	

(1) JEDEC document JEP155 states that 500V HBM allows safe manufacturing with a standard ESD control process.
(2) JEDEC document JEP157 states that 250V CDM allows safe manufacturing with a standard ESD control process.

6.3 Recommended Operating Conditions

PARAMETER		PINS	MIN	TYP	MAX	UNIT
V_{MAIN}	Main supply voltage digital and analog - VDD_MAIN_IN, VDDA_IN1, VDDA_IN2	32,4,5	1.62	1.8	1.98	V
V_{PA}	DC supply rail for PA	39,40	3	3.3	3.6	
V_{IO}	DC supply rail for input/output	17	1.62	1.8	1.98	
V_{PP}	DC supply rail for OTP memory	35	1.62	1.8	1.98	V
T_A	Operating ambient temperature		–40		105[1]	°C
	Maximum power dissipation				2	W

(1) The CC3300 and CC3301 devices may operate at temperatures of up to 105°C. This allows the device to be used reliably in applications that may be exposed to higher ambient temperature over certain periods of the product's life. At temperatures higher than 85°C, the WLAN/BLE performance may degrade. For more information please reference this application note https://www.ti.com/secureresources/CC33XX-THERMAL-GUIDELINES-NDA.

Copyright © 2025 Texas Instruments Incorporated

6.4 Electrical Characteristics

PARAMETER	DESCRIPTION	TEST CONDITION	MIN	TYP	MAX	UNIT
V_{IH}	High Level Input Voltage		0.65 × V_{IO}		V_{IO}	V
V_{IL}	Low Level Input Voltage		0		0.35 × V_{IO}	
V_{OH}	High Level Output Voltage	at 4mA	V_{IO} – 0.45		V_{IO}	
V_{OL}	Low Level Output Voltage	at 4mA	0		0.45	

6.5 Thermal Resistance Characteristics

THERMAL METRIC[1]	DESCRIPTION		UNIT
$R_{\theta JA}$	Junction-to-ambient thermal resistance (According to JEDEC EIA/JESD 51 document)	30.5	°C/W
$R_{\theta JC(top)}$	Junction-to-case (top) thermal resistance	16.7	
$R_{\theta JB}$	Junction-to-board thermal resistance	10	
Ψ_{JT}	Junction-to-top characterization parameter	0.1	
Ψ_{JB}	Junction-to-board characterization parameter	10	
$R_{\theta JC(bot)}$	Junction-to-case (bottom) thermal resistance	1.7	

(1) For more information about traditional and new thermal metrics, see the Semiconductor and IC Package Thermal Metrics application report.

6.6 WLAN Performance: 2.4GHz Receiver Characteristics

PARAMETER	TEST CONDITIONS	MIN	TYP	MAX	UNIT
Operational Frequency Range		2412		2472	MHz
Sensitivity: 8% PER for 11b rates, 10% PER for 11g/n/ax rates	1Mbps DSSS		–98.5		dBm
	2Mbps DSSS		–95.8		
	11Mbps CCK		–90.5		
	6Mbps OFDM		–93.7		
	54Mbps OFDM		–76		
	HT MCS0 MM 4K		–93.5		
	HT MCS7 MM 4K		–73.4		
	HE MCS0 4K		–93.2		
	HE MCS7 4K		–74		
Maximum input level: 8% PER for 11b rates, 10% PER for 11g/n/ax rates	1 DSSS		0		dBm
	OFDM6, HT MCS0, HE MCS0		0		
	OFDM54, HT MCS7, HE MCS7		–9		
Adjacent Channel Rejection	1Mbps DSSS		45		dB
	11Mbps CCK		39		
	6Mbps OFDM		20		
	54Mbps OFDM		3		
	HT MCS0		20		
	HT MCS7		3		
	HE MCS0		16		
	HE MCS7		–1		
RSSI Accuracy	–90dBm to –30dBm	–3		3	dB

Copyright © 2025 Texas Instruments Incorporated

6.7 WLAN Performance: 2.4GHz Transmitter Power

PARAMETER	TEST CONDITIONS	MIN	TYP	MAX	UNIT
Operational Frequency Range		2412		2472	MHz
Maximum output power at V_{PA} > 3.0V	1Mbps DSSS		20.5		dBm
	6Mbps OFDM		20.2		
	54Mbps OFDM		17.4		
	HT MCS0 MM		20.2		
	HT MCS7 MM		17.4		
	HE MCS0		20.2		
	HE MCS7		17.3		

6.8 BLE Performance: Receiver Characteristics

PARAMETER	TEST CONDITION	MIN	TYP	MAX	UNIT
BLE 125Kbps (LE Coded) Receiver Characteristics					
Receiver sensitivity[2]	PER <30.2%		–103.6 – 101.7		dBm
Receiver saturation	PER <30.2%		0 2		dBm
Co-channel rejection[1]	Wanted signal at –79dBm, modulated interferer in channel		10		dB
Selectivity, ±1MHz[1]	Wanted signal at –79dBm, modulated interferer at ±1MHz.		0 / 0		dB
Selectivity, ±2MHz[1]	Wanted signal at –79dBm, modulated interferer at ±2MHz.		–37 / –30		dB
Selectivity, ±3MHz[1]	Wanted signal at –79dBm, modulated interferer at ±3MHz.		–39 / –36		dB
Selectivity, ±4MHz[1]	Wanted signal at –79dBm, modulated interferer at ±4MHz.		–45 / –41		dB
RSSI Accuracy	Dynamic range of –90 to –20dBm	–4		4	dB
BLE 500Kbps (LE Coded) Receiver Characteristics					
Receiver sensitivity	PER <30.2%		–100.7 – 98.8		dBm
Receiver saturation	PER <30.2%		0 2		dBm
Co-channel rejection[1]	Wanted signal at –72dBm, modulated interferer in channel.		10		dB
Selectivity, ±1MHz[1]	Wanted signal at –72dBm, modulated interferer at ±1MHz.		0 / 0		dB
Selectivity, ±2MHz[1]	Wanted signal at –72dBm, modulated interferer at ±2MHz.		–35 / –25		dB
Selectivity, ±3MHz[1]	Wanted signal at –72dBm, modulated interferer at ±3MHz.		–40 / –37		dB
Selectivity, ±4MHz[1]	Wanted signal at –72dBm, modulated interferer at ±4MHz.		–45 / –40		dB
RSSI Accuracy	Dynamic range of –90 to –20dBm	–4		4	dB
BLE 1Mbps (LE 1M) Receiver Characteristics					
Receiver sensitivity[3]	PER <30.2%, 37 byte packets		– 99.4 – 97.4		dBm
Receiver sensitivity[3]	PER <30.2%, 255 byte packets		– 98.1 – 96.2		dBm

Copyright © 2025 Texas Instruments Incorporated

6.8 BLE Performance: Receiver Characteristics (continued)

PARAMETER	TEST CONDITION	MIN	TYP	MAX	UNIT
Receiver saturation	PER <30.2%		0 2		dBm
Co-channel rejection[(1)]	Wanted signal at –67dBm, modulated interferer in channel		10		dB
Selectivity, ±1MHz[(1)]	Wanted signal at –67dBm, modulated interferer at ±1MHz		0 / 0		dB
Selectivity, ±2MHz[(1)]	Wanted signal at –67dBm, modulated interferer at ±2MHz.		–35 / –28		dB
Selectivity, ±3MHz[(1)]	Wanted signal at –67dBm, modulated interferer at ±3MHz		–38 / –32		dB
Selectivity, ±4MHz[(1)]	Wanted signal at –67dBm, modulated interferer at ±4MHz		–45 / –40		dB
Out-of-band blocking	30MHz to 2000MHz, Wanted signal at –67dBm		–23		dBm
Out-of-band blocking	2003MHz to 2399MHz, Wanted signal at –67dBm		–30		dBm
Out-of-band blocking	2484 MHz to 2997 MHz, Wanted signal at –67dBm		–30		dBm
Out-of-band blocking	3000MHz to 6GHz, Wanted signal at –67dBm		–21		dBm
Intermodulation	Wanted signal at 2402MHz, –64dBm. Two interferers at 2405 and 2408MHz respectively, at the given power level		–40		dBm
RSSI accuracy	Dynamic range of –90 to –20dBm	–4		4	dB
BLE 2Mbps (LE 2M) Receiver Characteristics					
Receiver sensitivity[(4)]	PER <30.2%		– 95.2 – 93.3		dBm
Receiver saturation	PER <30.2%		0 2		dBm
Co-channel rejection[(1)]	Wanted signal at –67dBm, modulated interferer in channel		10		dB
Selectivity, ±2MHz[(1)]	Wanted signal at –67dBm, modulated interferer at ±2MHz.		0 / 0		dB
Selectivity, ±4MHz[(1)]	Wanted signal at –67dBm, modulated interferer at ±4MHz		–35 / –28		dB
Selectivity, ±6MHz[(1)]	Wanted signal at –67dBm, modulated interferer at ±6MHz		–35 / –28		dB
Alternate channel rejection, ±8MHz[(1)]	Wanted signal at –67dBm, modulated interferer at ±8MHz		–37 / –32		dB
Out-of-band blocking	30MHz to 2000MHz, Wanted signal at –67dBm		–23		dBm
Out-of-band blocking	2003MHz to 2399MHz, Wanted signal at –67dBm		–30		dBm
Out-of-band blocking	2484MHz to 2997MHz, Wanted signal at –67dBm		–30		dBm
Out-of-band blocking	3000MHz to 6GHz, Wanted signal at –67dBm		–21		dBm
Intermodulation	Wanted signal at 2402MHz, –64dBm. Two interferers at 2405 and 2408MHz respectively, at the given power level		–44		dBm
RSSI Accuracy	Dynamic range of –90 to –20dBm	–4		4	dB

(1) Numbers given as C/I dB
(2) BLE Coded PHY sensitivity on channels 17 may degrade by up to 3dB
(3) BLE 1M PHY sensitivity on channels 17 and 39 may degrade by up to 2.5dB
(4) BLE 2M PHY sensitivity on channel 17 may degrade by up to 1.5dB

Copyright © 2025 Texas Instruments Incorporated

6.9 BLE Performance: Transmitter Characteristics

The CC33X1 devices support BLE TX setting 0,5,10, or 20dBm

PARAMETER	DESCRIPTION	MIN	TYP	MAX	UNIT
Output Power, highest setting			20 17.8		dBm

6.10 Current Consumption: WLAN Static Modes

All results are based on measurements taken using the RadioTool evaluation application (typ values are taken with nominal devices at room temp).

PARAMETER	TEST CONDITIONS		V_{MAIN}		V_{PA}		UNIT
			TYP	MAX	TYP	MAX	
Continuous TX[1]	1 DSSS	TX Power = 20.5dBm	92		250	290[1]	mA
	6 OFDM	TX Power = 20.2dBm	105	170[1] [2]	250	290[1]	
	54 OFDM	TX Power = 17.4dBm	110		180		
	HT MCS0	TX Power = 20.2dBm	105		245		
	HT MCS7	TX Power = 17.4dBm	110		180		
	HE MCS0	TX Power = 20.2dBm	105		240		
	HE MCS7	TX Power = 17.3dBm	110		180		
Continuous RX			62		0		mA
Continuous Listen (For Beacon)			55.5		0		

(1) Peak current V_{PA} can hit 340mA during device calibration.
Peak current V_{MAIN} of 185mA including peripherals and internal CPU when operating up to 85°C. When ambient temperature is 105°C peak current can reach up to 235mA.

(2) The maximum current listed for V_{MAIN} is rated up to 85°C. When operating at 105°C the maximum current can reach up to 230mA. For more information please reference this application note https://www.ti.com/secureresources/CC33XX-THERMAL-GUIDELINES-NDA .

6.11 Current Consumption: 2.4GHz WLAN Use Cases

MODE	DESCRIPTION	TYP[1]	UNIT
System with 3.3V to Ext. DC/DC at 85% Efficiency			
DTIM = 1	WLAN beacon reception every DTIM=1 (~102ms)	562	µA
DTIM = 3	WLAN beacon reception every DTIM=3 (~306ms)	355	
DTIM = 5	WLAN beacon reception every DTIM=5 (~510ms)	313	
System with 1.8V			
DTIM = 1	WLAN beacon reception every DTIM=1 (~102ms)	864	µA
DTIM = 3	WLAN beacon reception every DTIM=3 (~306ms)	546	
DTIM = 5	WLAN beacon reception every DTIM=5 (~510ms)	482	

(1) Current measured on V_{Main} supply

6.12 Current Consumption: BLE Static Modes

All results are based on measurements taken using the RadioTool evaluation application (typ values are taken with nominal devices at room temp).

PARAMETER	TEST CONDITIONS	V_{MAIN}		V_{PA}		UNIT
		TYP	MAX	TYP	MAX	
TX	TX Power = 0dBm	102		35		mA
	TX Power = 10dBm	102		100		
	TX Power = 20dBm	105		250		

Copyright © 2025 Texas Instruments Incorporated

All results are based on measurements taken using the RadioTool evaluation application (typ values are taken with nominal devices at room temp).

PARAMETER	TEST CONDITIONS	V_{MAIN}		V_{PA}		UNIT
		TYP	MAX	TYP	MAX	
RX		62		0		mA

6.13 Current Consumption: BLE Use Cases

over operating free-air temperature range (unless otherwise noted)

MODE	TYP(1)	UNIT
BLE Advertise 100ms	3029	µA
BLE Connection, 1s	633	µA

(1) Current measured on V_{Main} supply

6.14 Current Consumption: Device Modes

Nominal device at room temperature

MODE	DESCRIPTION	V_{MAIN}		V_{PA}		UNIT
		TYP	MAX	TYP	MAX	
Shutdown	External supplies are available, device held in reset (nReset is low)	10		2		µA
Sleep	Low power mode - RAM in retention	330		2		

6.15 Timing and Switching Characteristics

6.15.1 Power Supply Sequencing

For proper operation of the CC330x device, perform the recommended power-up sequencing as follows:

1. All supplies (VDD_MAIN_IN, VDDA, VIO, VPA) must be available before nReset is released.
2. For an external slow clock, confirm that the clock is stable before nReset is deasserted (high).
3. The nReset pin must be held low for at least 10µs after stabilization of the external power supplies.

6.15.2 Clocking Specifications

The CC330x device uses two clocks for operation:

- A fast clock running at 40MHz for WLAN/BLE functions
- A slow clock running at 32.768kHz for low-power modes

The slow clock can be generated internally or externally. The fast clock must be generated externally.

6.15.2.1 Slow Clock Generated Internally

To minimize external components, the slow clock can be generated by an internal oscillator. However, this clock is less accurate and consumes more power than sourcing the slow clock externally. For this scenario, leave the Slow_CLK_IN pin unconnected.

6.15.2.2 Slow Clock Using an External Oscillator

For the best power consumption, the slow clock can be generated externally by an oscillator or sourced from elsewhere in the system. The external source must meet the requirements listed below. This clock must be fed into the CC330x pin Slow_CLK_IN and must be stable before nReset is deasserted and the device is enabled.

6.15.2.2.1 External Slow Clock Requirements

PARAMETER		Description	MIN	TYP	MAX	UNIT
	Input slow clock frequency	Square wave		32768		Hz

PARAMETER		Description	MIN	TYP	MAX	UNIT
	Frequency accuracy	Inital + temperature + aging			±250	ppm
	Input Duty cycle		30%	50%	70%	
T_r/T_f	Rise and fall time	10% to 90% (rise) and 90% to 10% (fall) of digital signal level			100	ns
V_{IL}	Input low level		0		0.35 × V_{IO}	V
V_{IH}	Input high level		0.65 × V_{IO}		1.95	V
	Input impedence		1			MΩ
	Input capacitance				5	pF

6.15.2.3 Fast Clock Using an External Crystal (XTAL)

The CC330x device supports a crystal-based fast clock (XTAL). The crystal is fed directly between HFXT_P and HFXT_M pins with compatible loading capacitors, and must meet the requirements below.

6.15.2.3.1 External Fast Clock XTAL Specifications

PARAMETER	TEST CONDITIONS	MIN	TYP	MAX	UNIT
Supported frequencies			40		MHz
Frequency accuracy	Initial + temperature + aging			±25	ppm
Load Capacitance, C_L (1)		5		13	pF
Equivalent series resistance, ESR				40	Ω
Drive level			100		uW

(1) Load capacitance, C_L= [C1*C2] / [C1 + C2] + C_P, where C1, C2 are the capacitors connected on HFXT_P and HFXT_M, respectively, and C_P is the parasitic capacitance (typically 1 to 2 pF). For example, for C1 = C2 = 6.2pF and C_P = 2pF, then C_L = 5pF.

6.16 Interface Timing Characteristics

6.16.1 SDIO Timing Specifications

SDIO is the main host interface for WLAN, and supports a maximum clock rate of 52MHz. The CC330x device also supports shared SDIO interface for both BLE and WLAN.

6.16.1.1 SDIO Timing Diagram—Default Speed

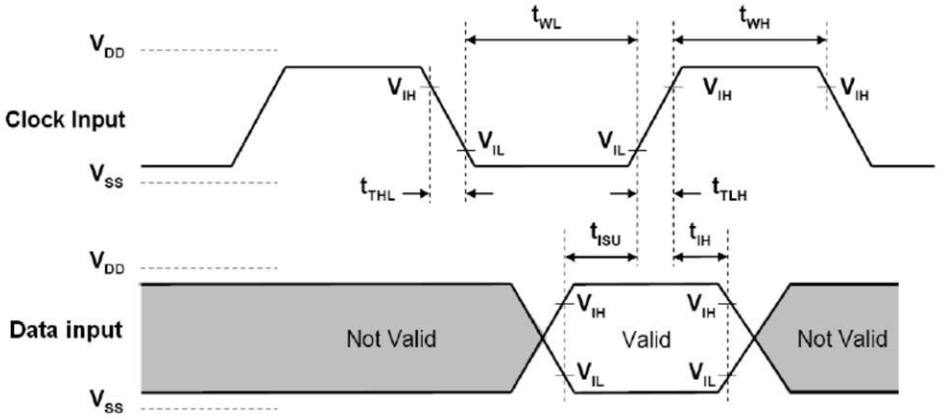

Figure 6-1. SDIO Default Input Timing

Copyright © 2025 Texas Instruments Incorporated

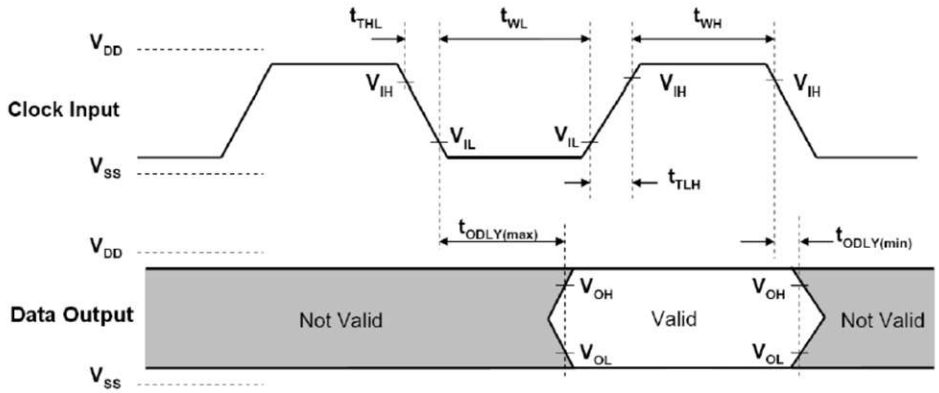

Figure 6-2. SDIO Default Output Timing

6.16.1.2 SDIO Timing Parameters: Default Speed

PARAMETER	DESCRIPTION	MIN	MAX	UNIT
f_{clock}	Clock frequency, CLK		26	MHz
t_{High}	High Period	10		ns
t_{Low}	Low Period	10		
t_{TLH}	Rise time, CLK		10	
t_{THL}	Fall time, CLK		10	
t_{ISU}	Setup time, input valid before CLK ↑	5		
t_{IH}	Hold time, input valid after CLK ↑	5		
t_{ODLY}	Delay time, CLK ↓ to output valid	2	14	
C_L	Capacitive load on outputs	15	40	pF

6.16.1.3 SDIO Timing Diagram—High Speed

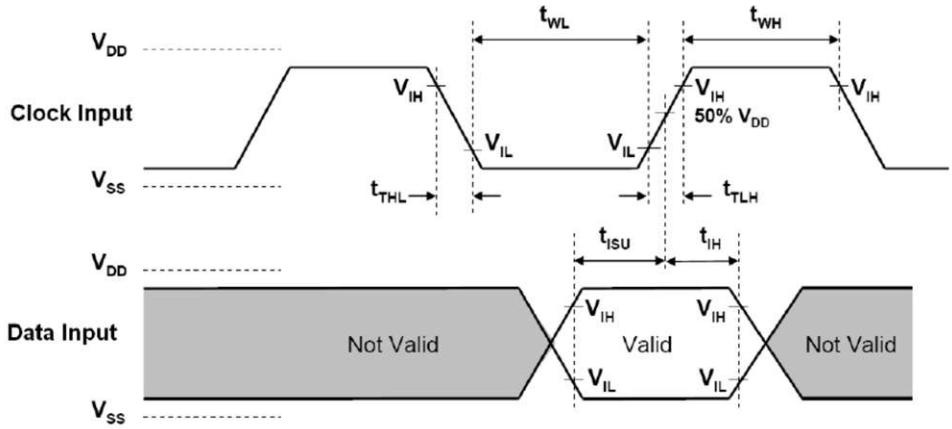

Figure 6-3. SDIO HS Input Timing

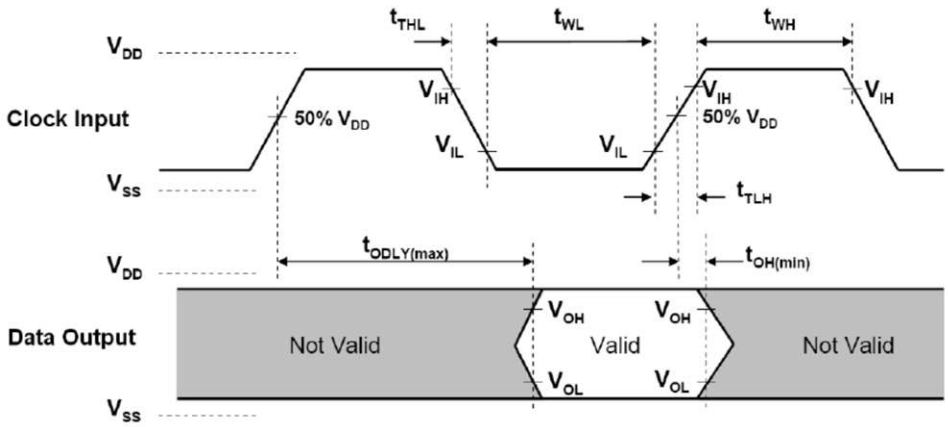

Figure 6-4. SDIO HS Output Timing

6.16.1.4 SDIO Timing Parameters: High Speed

PARAMETER	DESCRIPTION	MIN	MAX	UNIT
f_{clock}	Clock frequency, CLK		52	MHz
t_{High}	High Period	7		ns
t_{Low}	Low Period	7		
t_{TLH}	Rise time, CLK		3	
t_{THL}	Fall time, CLK		3	
t_{ISU}	Setup time, input valid before CLK ↑	6		
t_{IH}	Hold time, input valid after CLK ↑	2		
t_{ODLY}	Delay time, CLK ↑ to output valid	2	14	
C_L	Capacitive load on outputs	15	40	pF

Copyright © 2025 Texas Instruments Incorporated

6.16.2 SPI Timing Specifications

The SPI is another host interface for WLAN. The CC330x devices also support shared SPI interface for both BLE and WLAN.

6.16.2.1 SPI Timing Diagram

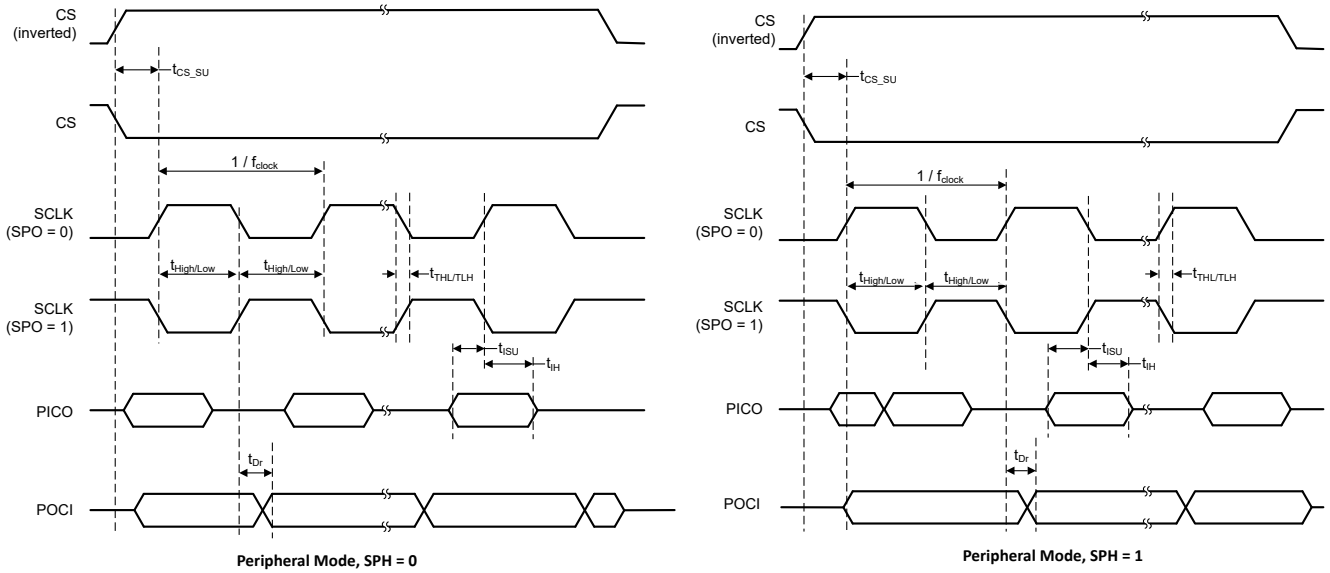

Figure 6-5. SPI Timing

6.16.2.2 SPI Timing Parameters

PARAMETER	DESCRIPTION	MIN	MAX	UNIT
f_{clock}	Clock frequency, CLK		26	MHz
t_{High}	High Period	10		ns
t_{Low}	Low Period	10		
t_{TLH}	Rise time, CLK		3	
t_{THL}	Fall time, CLK		3	
t_{CSsu}	CS Setup time, CS valid before CLK ↑	3		
t_{ISU}	PICO, input valid before CLK ↑	3		
t_{IH}	PICO Hold time, input valid after CLK ↑	3		
t_{Dr}, t_{Df} - Active	Delay time, CLK ↑/↓ to output valid	2	10	
t_{Dr}, t_{Df} - Sleep	Delay time, CLK ↑/↓ to output valid		12	
C_L	Capacitive load on outputs	15	40	pF

6.16.3 UART 4-Wire Interface

UART is the main host interface for BLE, which supports the host controller interface (HCI) transport layer.

6.16.3.1 UART Timing Diagram

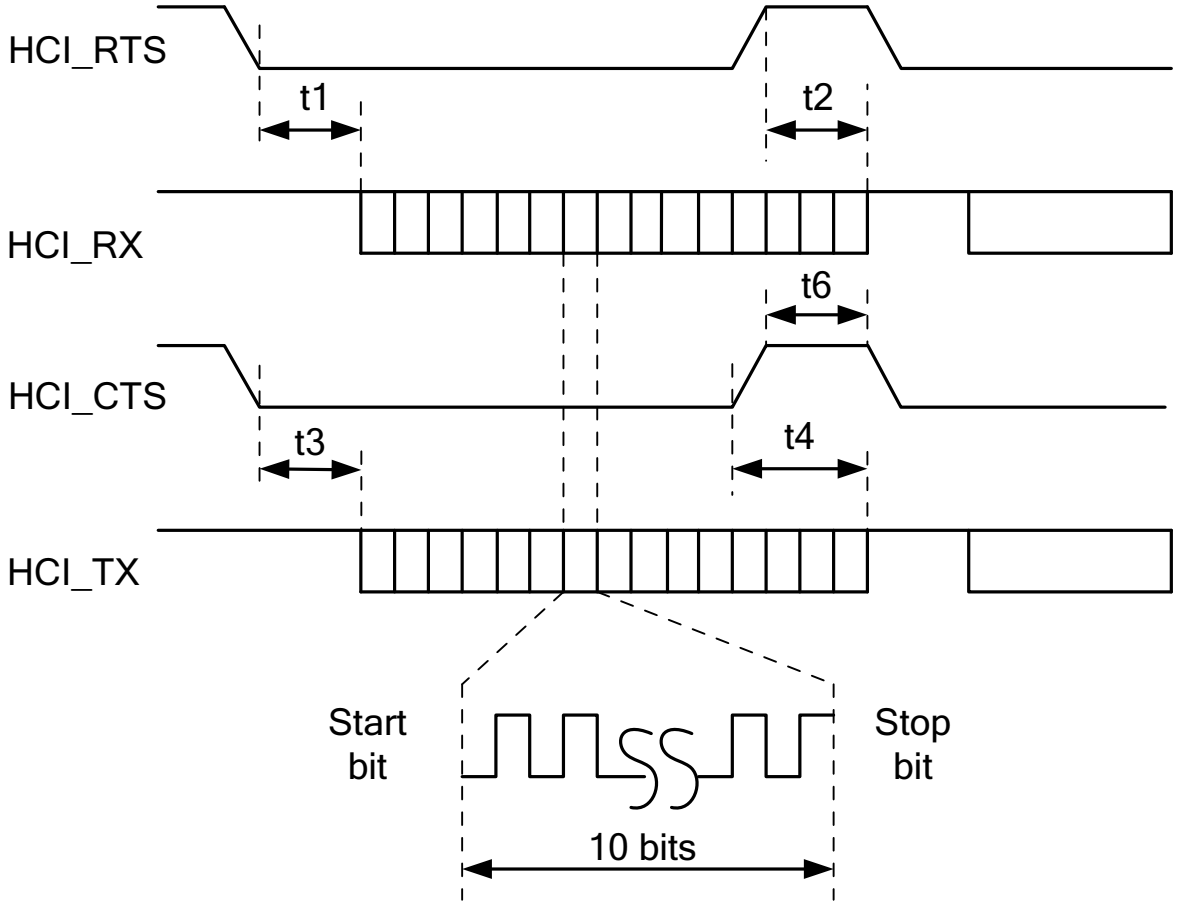

Figure 6-6. UART Timing Diagram

6.16.3.2 UART Timing Parameters

PARAMETER	CONDITION	MIN	TYP	MAX	UNIT
Baud rate		37.5		4364	kbps
Baud rate accuracy per byte	Receive/Transmit	–2.5%		+1.5%	
Baud rate accuracy per bit	Receive/Transmit	–12.5%		+12.5%	
CTS low to TX_DATA on		0	2		ms
CTS high to TX_DATA off	Hardware flow control			1	Byte
CTS high pulse width		1			bit
RTS low to RX_DATA on		0	2		ms
RTS high to RX_DATA off	Interupt set to 1/4 FIFO			16	Byte

Copyright © 2025 Texas Instruments Incorporated

7 Detailed Description

The CC330x offers Wi-Fi 6 (802.11ax) and BLE 5.4 (CC3301 devices) in a single-chip solution while maintaining compatibility with Wi-Fi 4 (802.11 a/b/g/n) and Wi-Fi 5 (802.11ac). These devices are ideal for cost-sensitive embedded applications with a Linux or RTOS host running TCP/IP. CC330x brings the efficiency of Wi-Fi 6 to embedded device applications for the Internet of Things (IoT) with a small PCB footprint and a highly optimized bill of materials. The device features an integrated 2.4GHz PA for a complete wireless solution with up to +20.5dBm output power, operating temperature of –40°C to +105°C, and application throughput up to 50Mbps. The CC330x devices include BSD-3 clause software distributed in integrated ROM. License terms are provided in the product software manifest available in the CC33XX-Software downloadable product.

7.1 WLAN Features

The device supports the following WLAN features:

- 2.4GHz, 20MHz, single spatial stream
- MAC, baseband, and RF transceiver with support for IEEE 802.11 a/b/g/n/ax
- OFDMA, trigger frame, MU-MIMO (downlink), basic service set coloring, and target wake time (TWT) for improved efficiency
- Hardware-based encryption and decryption supporting WPA2 and WPA3
- Multirole support (for example, concurrent STA and AP) to connect with Wi-Fi devices on different RF channels (Wi-Fi networks)
- Optional antenna diversity or selection
- 3-wire or 1-wire PTA for external coexistence with additional 2.4GHz radios (for example, Thread or Zigbee)
- Excellent interoperability
- Support for 4-bit SDIO or SPI host interfaces

7.2 Bluetooth Low Energy Features

The device supports the following Bluetooth low energy features:

- Bluetooth Low Energy 5.4
- LE coded PHYs (long range), LE 2M PHY (high speed), and advertising extension
- Host controller interface (HCI) transport with option for UART or shared SDIO

Copyright © 2025 Texas Instruments Incorporated

8 Applications, Implementation, and Layout

Note

Information in the following applications sections is not part of the TI component specification, and TI does not warrant its accuracy or completeness. TI's customers are responsible for determining suitability of components for their purposes, as well as validating and testing their design implementation to confirm system functionality.

Figure 8-1 shows the reference schematic for the CC3301 using an optimized bill of materials.

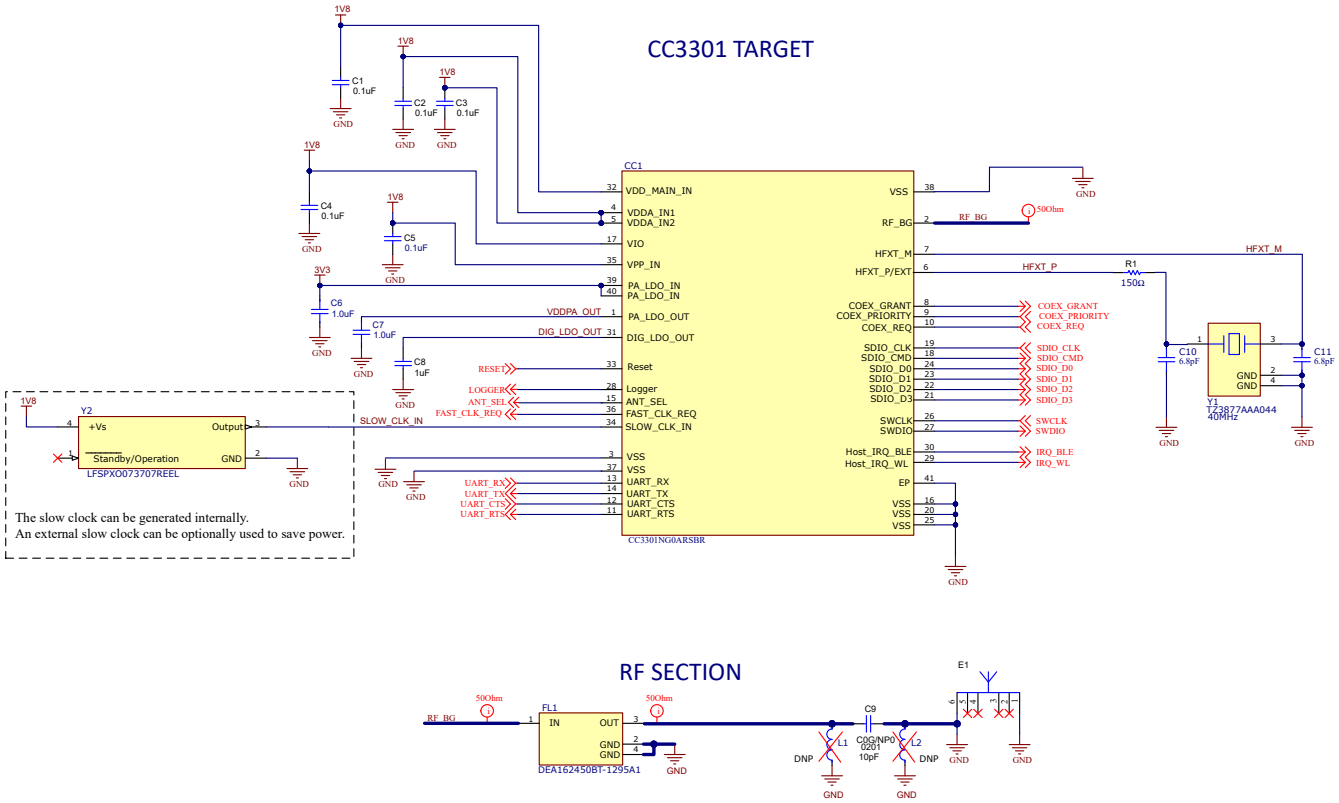

Figure 8-1. CC3301 Reference Schematic

1. The slow clock can be generated internally. An external slow clock can be optionally used to save power.
2. For more information on antenna selection and matching, see the CC33xx Hardware Integration.

Copyright © 2025 Texas Instruments Incorporated

9 Device and Documentation Support

TI offers an extensive line of development tools. Tools and software to evaluate the performance of the device, generate code, and develop systems are listed below.

9.1 Third-Party Products Disclaimer

TI'S PUBLICATION OF INFORMATION REGARDING THIRD-PARTY PRODUCTS OR SERVICES DOES NOT CONSTITUTE AN ENDORSEMENT REGARDING THE SUITABILITY OF SUCH PRODUCTS OR SERVICES OR A WARRANTY, REPRESENTATION OR ENDORSEMENT OF SUCH PRODUCTS OR SERVICES, EITHER ALONE OR IN COMBINATION WITH ANY TI PRODUCT OR SERVICE.

9.2 Device Nomenclature Boilerplate

Device development evolutionary flow:

X Experimental device that is not necessarily representative of the final device's electrical specifications and may not use production assembly flow.

P Prototype device that is not necessarily the final silicon die and may not necessarily meet final electrical specifications.

null Production version of the silicon die that is fully qualified.

Support tool development evolutionary flow:

TMDX Development-support product that has not yet completed Texas Instruments internal qualification testing.

TMDS Fully-qualified development-support product.

X and P devices and TMDX development-support tools are shipped against the following disclaimer:

Device development evolutionary flow:

TMX Experimental device that is not necessarily representative of the final device's electrical specifications and may not use production assembly flow.

TMP Prototype device that is not necessarily the final silicon die and may not necessarily meet final electrical specifications.

TMS Production version of the silicon die that is fully qualified.

Support tool development evolutionary flow:

TMDX Development-support product that has not yet completed Texas Instruments internal qualification testing.

TMDS Fully-qualified development-support product.

TMX and TMP devices and TMDX development-support tools are shipped against the following disclaimer:

"Developmental product is intended for internal evaluation purposes."

Production devices and TMDS development-support tools have been characterized fully, and the quality and reliability of the device have been demonstrated fully. TI's standard warranty applies.

Predictions show that prototype devices (X or P) have a greater failure rate than the standard production devices. Texas Instruments recommends that these devices not be used in any production system because their expected end-use failure rate still is undefined. Only qualified production devices are to be used.

Copyright © 2025 Texas Instruments Incorporated

9.3 Tools and Software

Design Kits and Evaluation Modules

CC330x Reference Design Files	CC330x reference design CAD source files. TI recommends using this design as a reference when creating the layout to achieve the RF performance listed in this data sheet.
CC3351 BoosterPack plug-in module	The CC3351 BoosterPack™ plug-in module (BP-CC3351) is a test and development board that can be easily connected to TI LaunchPad™ development kits or processor boards; thus, enabling rapid software development.
CC3351 M.2 card plug-in module	The CC3351 M.2 card plug-in module (M2-CC3351) is a test and development board that can be easily connected to TI processor boards or other processor boards with an M.2 Key E interface support; thus, enabling rapid software development.

Software

SimpleLink Wi-Fi Toolbox	SimpleLink Wi-Fi Toolbox is a collection of tools to help development and testing of the CC33xx. The Wi-Fi toolbox package provides all the capabilities required to debug and monitor WLAN/Bluetooth® Low Energy firmware with a host, perform RF validation tests, run a pretest for regulatory certification testing, and debug hardware and software platform integration issues.
CC33xx device drivers	The CC33xx devices are single-chip Wi-Fi 6 and Bluetooth Low Energy 5.4 companion devices designed for both Linux and RTOS-based systems. CC33XX-SOFTWARE is a collection of software development sources aimed to facilitate quick setup, out-of-box experience, and accelerate development in Linux or RTOS environments. These devices include BSD-3 Clause software distributed in integrated ROM. License terms are provided in the product software manifest available in the CC33XX-Software downloadable product.

9.4 Documentation Support

To receive notification of documentation updates, navigate to the device product folder on ti.com. Click on *Notifications* to register and receive a weekly digest of any product information that has changed. For change details, review the revision history included in any revised document.

Application Reports

CC33xx Production Line Guide	Texas Instruments™ provides many resources to assist users in quickly examining the functionality and performance of TI devices. This document provides the necessary information to guide the user in production line testing for CC33xx. The device's functions can be checked using tools and software provided by Texas Instruments. Performance testing is more involved as external equipment is required for a thorough examination.
SimpleLink CC33xx Security Features	This document describes the CC33xx security-related features, which are made available to vendors through an ecosystem that incorporates simple and concise APIs, tools, and documentation.

User's Guides

CC33xx WLAN Features User's Guide	This document provides information about CC33xx family of devices and Wi-Fi® features, as well as TI proprietary enhancements. The document does not provide the complete application programming interface (API) set, but a high-level overview of the features.
CC33xx Hardware Integration	This document describes how to integrate the CC33xx into any system and the hardware requirements for this device. Layout and schematic considerations are listed here as well,

Copyright © 2025 Texas Instruments Incorporated

which TI highly recommends following to achieve the device performance listed in this data sheet.

9.5 Support Resources

TI E2E™ support forums are an engineer's go-to source for fast, verified answers and design help — straight from the experts. Search existing answers or ask your own question to get the quick design help you need.

Linked content is provided "AS IS" by the respective contributors. They do not constitute TI specifications and do not necessarily reflect TI's views; see TI's Terms of Use.

9.6 Trademarks

SimpleLink™ is a trademark of TI.
Wi-Fi™ is a trademark of Wi-Fi Alliance.
TI E2E™ is a trademark of Texas Instruments.
Bluetooth® is a registered trademark of Bluetooth SIG, Inc..
Linux® is a registered trademark of Linus Torvalds in the U.S. and other countries..
All trademarks are the property of their respective owners.

9.7 Electrostatic Discharge Caution

This integrated circuit can be damaged by ESD. Texas Instruments recommends that all integrated circuits be handled with appropriate precautions. Failure to observe proper handling and installation procedures can cause damage.

ESD damage can range from subtle performance degradation to complete device failure. Precision integrated circuits may be more susceptible to damage because very small parametric changes could cause the device not to meet its published specifications.

9.8 Glossary

TI Glossary	This glossary lists and explains terms, acronyms, and definitions.

10 Revision History

NOTE: Page numbers for previous revisions may differ from page numbers in the current version.

Changes from July 9, 2025 to October 1, 2025 (from Revision E (July 2025) to Revision F (October 2025)) — **Page**

- Updated BLE Use Cases....13

Changes from December 19, 2023 to July 9, 2025 (from Revision D (December 2023) to Revision E (July 2025)) — **Page**

- Updated specifications and descriptions.... 1
- Updated reference schematic....20

11 Mechanical, Packaging, and Orderable Information

The following pages include mechanical, packaging, and orderable information. This information is the most current data available for the designated devices. This data is subject to change without notice and revision of this document. For browser-based versions of this data sheet, refer to the left-hand navigation.

Copyright © 2025 Texas Instruments Incorporated

PACKAGING INFORMATION

Orderable part number	Status (1)	Material type (2)	Package | Pins	Package qty | Carrier	RoHS (3)	Lead finish/ Ball material (4)	MSL rating/ Peak reflow (5)	Op temp (°C)	Part marking (6)
CC3300ENJARSBR	Active	Production	WQFN (RSB) | 40	3000 | LARGE T&R	Yes	SN	Level-2-260C-1 YEAR	-40 to 105	CC3300 ENJA
CC3300ENJARSBR.A	Active	Production	WQFN (RSB) | 40	3000 | LARGE T&R	Yes	SN	Level-2-260C-1 YEAR	-40 to 105	CC3300 ENJA
CC3300ENJARSBR.B	Active	Production	WQFN (RSB) | 40	3000 | LARGE T&R	Yes	SN	Level-2-260C-1 YEAR	-40 to 105	CC3300 ENJA
CC3301ENJARSBR	Active	Production	WQFN (RSB) | 40	3000 | LARGE T&R	Yes	SN	Level-2-260C-1 YEAR	-40 to 105	CC3301 ENJA
CC3301ENJARSBR.A	Active	Production	WQFN (RSB) | 40	3000 | LARGE T&R	Yes	SN	Level-2-260C-1 YEAR	-40 to 105	CC3301 ENJA
CC3301ENJARSBR.B	Active	Production	WQFN (RSB) | 40	3000 | LARGE T&R	Yes	SN	Level-2-260C-1 YEAR	-40 to 105	CC3301 ENJA

(1) **Status:** For more details on status, see our product life cycle.

(2) **Material type:** When designated, preproduction parts are prototypes/experimental devices, and are not yet approved or released for full production. Testing and final process, including without limitation quality assurance, reliability performance testing, and/or process qualification, may not yet be complete, and this item is subject to further changes or possible discontinuation. If available for ordering, purchases will be subject to an additional waiver at checkout, and are intended for early internal evaluation purposes only. These items are sold without warranties of any kind.

(3) **RoHS values:** Yes, No, RoHS Exempt. See the TI RoHS Statement for additional information and value definition.

(4) **Lead finish/Ball material:** Parts may have multiple material finish options. Finish options are separated by a vertical ruled line. Lead finish/Ball material values may wrap to two lines if the finish value exceeds the maximum column width.

(5) **MSL rating/Peak reflow:** The moisture sensitivity level ratings and peak solder (reflow) temperatures. In the event that a part has multiple moisture sensitivity ratings, only the lowest level per JEDEC standards is shown. Refer to the shipping label for the actual reflow temperature that will be used to mount the part to the printed circuit board.

(6) **Part marking:** There may be an additional marking, which relates to the logo, the lot trace code information, or the environmental category of the part.

Multiple part markings will be inside parentheses. Only one part marking contained in parentheses and separated by a "~" will appear on a part. If a line is indented then it is a continuation of the previous line and the two combined represent the entire part marking for that device.

Important Information and Disclaimer: The information provided on this page represents TI's knowledge and belief as of the date that it is provided. TI bases its knowledge and belief on information provided by third parties, and makes no representation or warranty as to the accuracy of such information. Efforts are underway to better integrate information from third parties. TI has taken and continues to take reasonable steps to provide representative and accurate information but may not have conducted destructive testing or chemical analysis on incoming materials and chemicals. TI and TI suppliers consider certain information to be proprietary, and thus CAS numbers and other limited information may not be available for release.

In no event shall TI's liability arising out of such information exceed the total purchase price of the TI part(s) at issue in this document sold by TI to Customer on an annual basis.

TAPE AND REEL INFORMATION

REEL DIMENSIONS

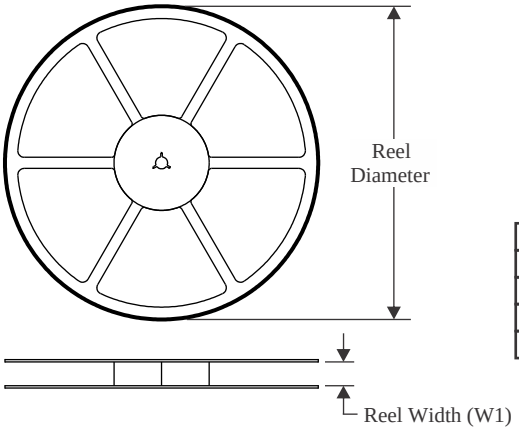

TAPE DIMENSIONS

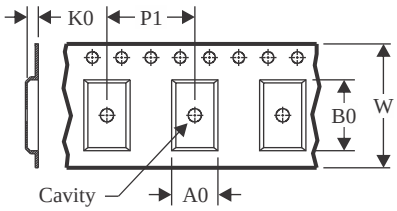

A0	Dimension designed to accommodate the component width
B0	Dimension designed to accommodate the component length
K0	Dimension designed to accommodate the component thickness
W	Overall width of the carrier tape
P1	Pitch between successive cavity centers

QUADRANT ASSIGNMENTS FOR PIN 1 ORIENTATION IN TAPE

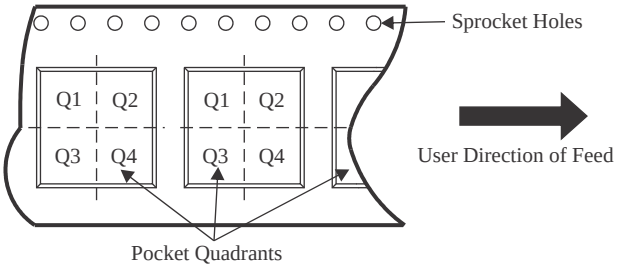

*All dimensions are nominal

Device	Package Type	Package Drawing	Pins	SPQ	Reel Diameter (mm)	Reel Width W1 (mm)	A0 (mm)	B0 (mm)	K0 (mm)	P1 (mm)	W (mm)	Pin1 Quadrant
CC3300ENJARSBR	WQFN	RSB	40	3000	330.0	12.4	5.3	5.3	1.1	8.0	12.0	Q2
CC3301ENJARSBR	WQFN	RSB	40	3000	330.0	12.4	5.3	5.3	1.1	8.0	12.0	Q2

TAPE AND REEL BOX DIMENSIONS

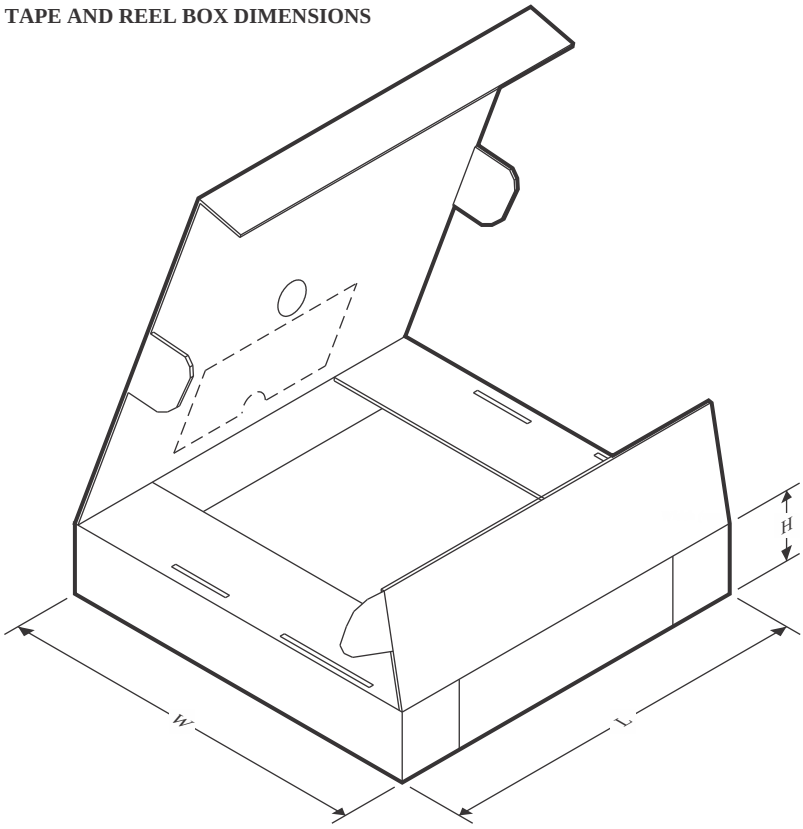

*All dimensions are nominal

Device	Package Type	Package Drawing	Pins	SPQ	Length (mm)	Width (mm)	Height (mm)
CC3300ENJARSBR	WQFN	RSB	40	3000	360.0	360.0	36.0
CC3301ENJARSBR	WQFN	RSB	40	3000	360.0	360.0	36.0

RSB 40

WQFN - 0.8 mm max height

PLASTIC QUAD FLATPACK - NO LEAD

5 x 5 mm, 0.4 mm pitch

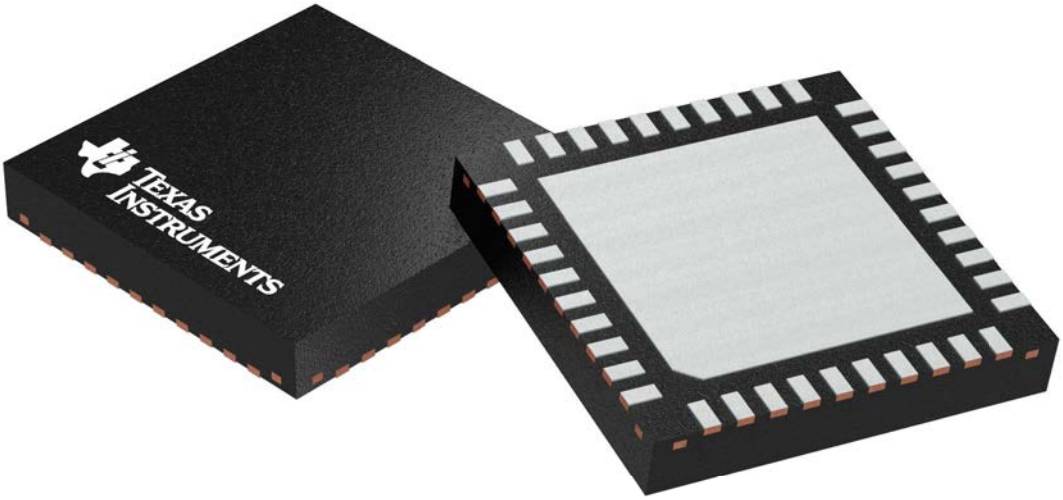

Images above are just a representation of the package family, actual package may vary.
Refer to the product data sheet for package details.

TEXAS INSTRUMENTS

RSB0040B

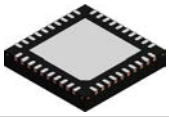

PACKAGE OUTLINE

WQFN - 0.8 mm max height

PLASTIC QUAD FLATPACK - NO LEAD

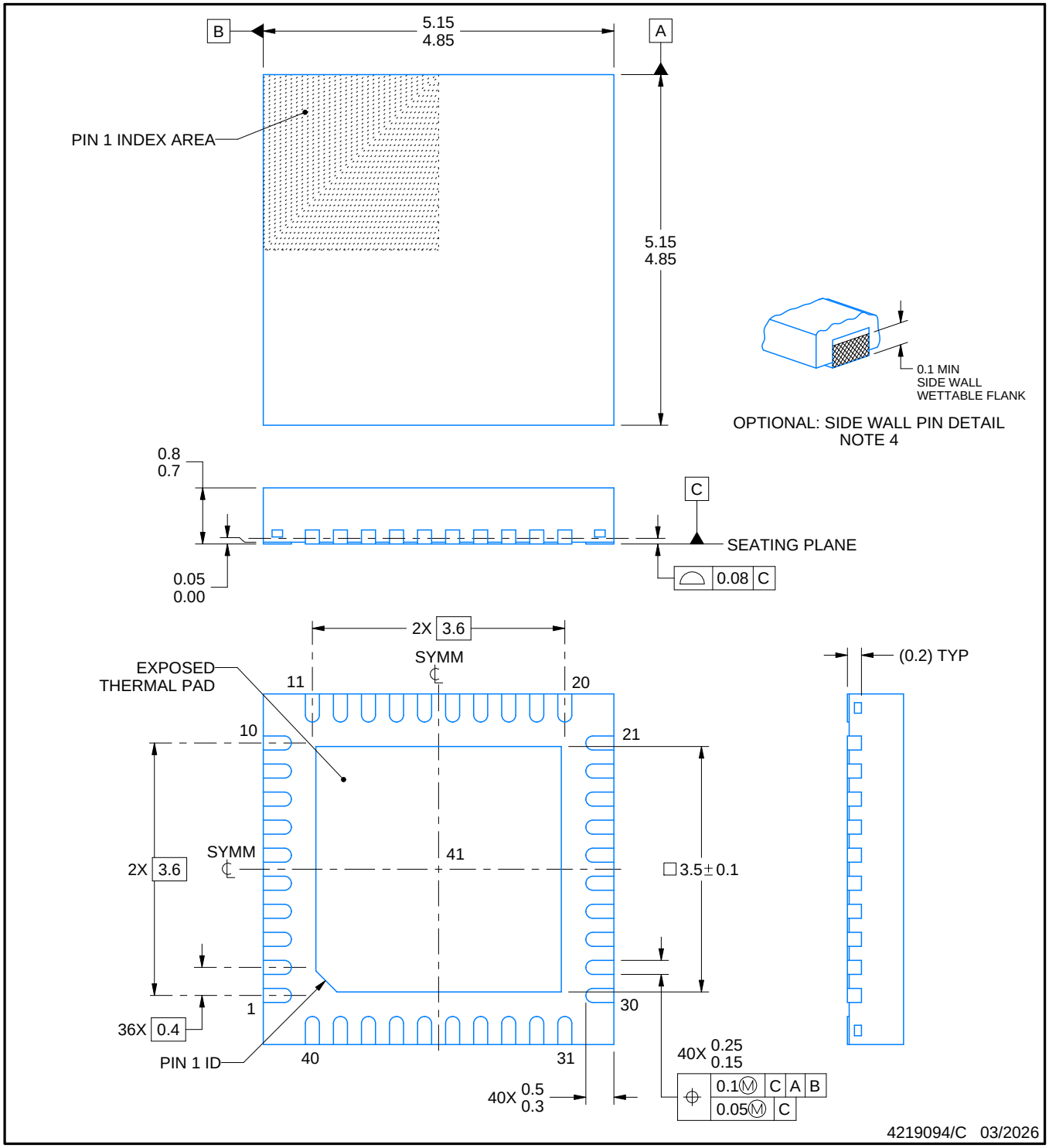

NOTES:

1. All linear dimensions are in millimeters. Any dimensions in parenthesis are for reference only. Dimensioning and tolerancing per ASME Y14.5M.
2. This drawing is subject to change without notice.
3. The package thermal pad must be soldered to the printed circuit board for thermal and mechanical performance.
4. Minimum 0.1 mm solder wetting on pin side wall. Available for wettable flank version only.

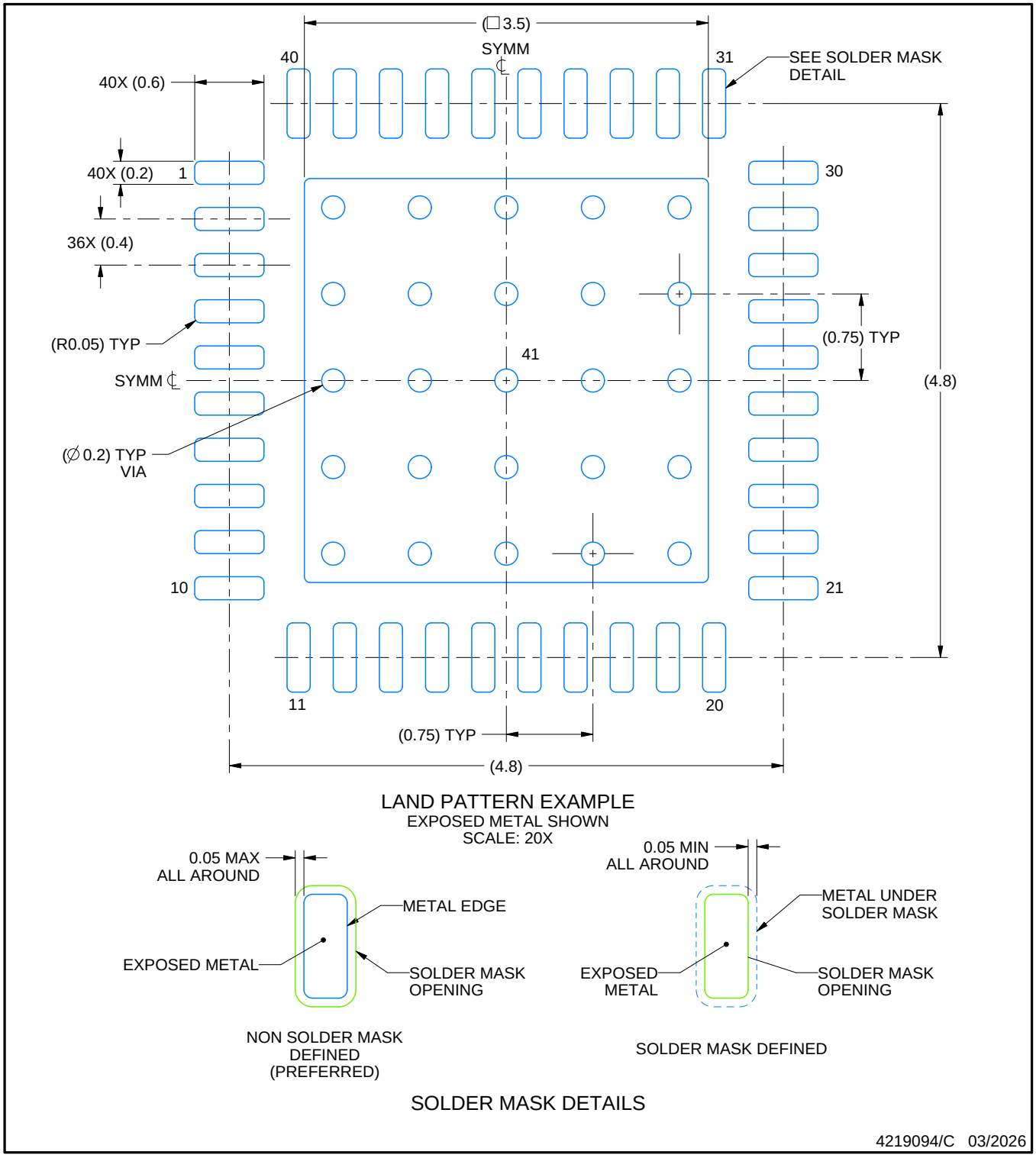

NOTES: (continued)

5. This package is designed to be soldered to a thermal pad on the board. For more information, see Texas Instruments literature number SLUA271 (www.ti.com/lit/slua271).
6. Vias are optional depending on application, refer to device data sheet. If any vias are implemented, refer to their locations shown on this view. It is recommended that vias under paste be filled, plugged or tented.

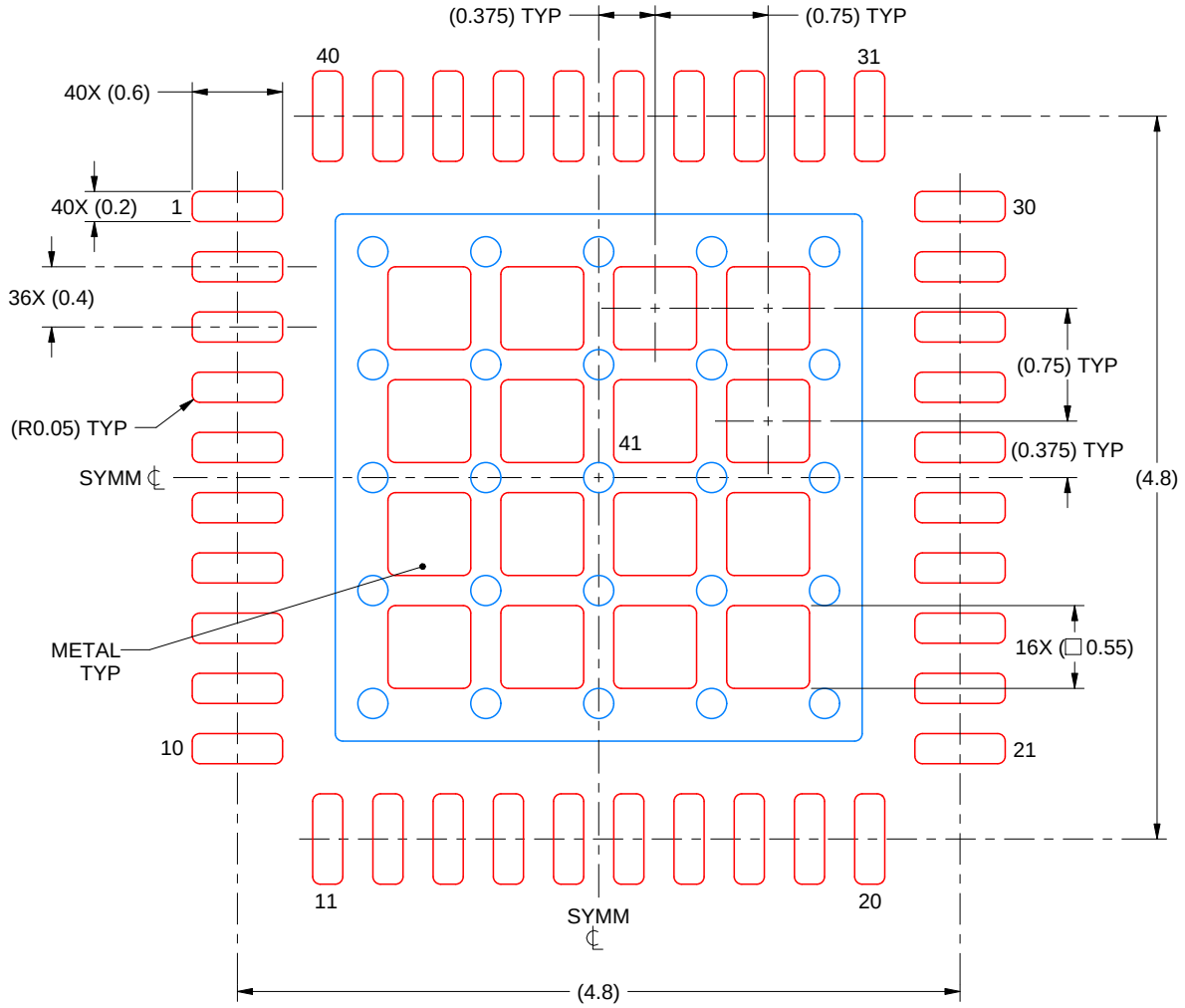

SOLDER PASTE EXAMPLE
BASED ON 0.125 MM THICK STENCIL
SCALE: 20X

EXPOSED PAD 41
40% PRINTED SOLDER COVERAGE BY AREA UNDER PACKAGE

4219094/C 03/2026

NOTES: (continued)

7. Laser cutting apertures with trapezoidal walls and rounded corners may offer better paste release. IPC-7525 may have alternate design recommendations.

IMPORTANT NOTICE AND DISCLAIMER

TI PROVIDES TECHNICAL AND RELIABILITY DATA (INCLUDING DATASHEETS), DESIGN RESOURCES (INCLUDING REFERENCE DESIGNS), APPLICATION OR OTHER DESIGN ADVICE, WEB TOOLS, SAFETY INFORMATION, AND OTHER RESOURCES “AS IS” AND WITH ALL FAULTS, AND DISCLAIMS ALL WARRANTIES, EXPRESS AND IMPLIED, INCLUDING WITHOUT LIMITATION ANY IMPLIED WARRANTIES OF MERCHANTABILITY, FITNESS FOR A PARTICULAR PURPOSE OR NON-INFRINGEMENT OF THIRD PARTY INTELLECTUAL PROPERTY RIGHTS.

These resources are intended for skilled developers designing with TI products. You are solely responsible for (1) selecting the appropriate TI products for your application, (2) designing, validating and testing your application, and (3) ensuring your application meets applicable standards, and any other safety, security, regulatory or other requirements.

These resources are subject to change without notice. TI grants you permission to use these resources only for development of an application that uses the TI products described in the resource. Other reproduction and display of these resources is prohibited. No license is granted to any other TI intellectual property right or to any third party intellectual property right. TI disclaims responsibility for, and you fully indemnify TI and its representatives against any claims, damages, costs, losses, and liabilities arising out of your use of these resources.

TI’s products are provided subject to TI’s Terms of Sale, TI’s General Quality Guidelines, or other applicable terms available either on ti.com or provided in conjunction with such TI products. TI’s provision of these resources does not expand or otherwise alter TI’s applicable warranties or warranty disclaimers for TI products. Unless TI explicitly designates a product as custom or customer-specified, TI products are standard, catalog, general purpose devices.

TI objects to and rejects any additional or different terms you may propose.

Copyright © 2026, Texas Instruments Incorporated

Last updated 10/2025