2.4-GHz *Bluetooth*® low energy System-on-Chip

Check for Samples: CC2540F128, CC2540F256

FEATURES

- **True Single-Chip BLE Solution: CC2540 Can Run Both Application and BLE Protocol Stack, Includes Peripherals to Interface With Wide Range of Sensors, Etc.**
- **6-mm × 6-mm Package**
- **RF**
  - ***Bluetooth* low energy technology Compatible**
  - **Excellent Link Budget (up to 97 dB), Enabling Long-Range Applications Without External Front End**
  - **Accurate Digital Received Signal-Strength Indicator (RSSI)**
  - **Suitable for Systems Targeting Compliance With Worldwide Radio Frequency Regulations: ETSI EN 300 328 and EN 300 440 Class 2 (Europe), FCC CFR47 Part 15 (US), and ARIB STD-T66 (Japan)**
- **Layout**
  - **Few External Components**
  - **Reference Design Provided**
  - **6-mm × 6-mm QFN40 Package**
- **Low Power**
  - **Active Mode RX Down to 19.6 mA**
  - **Active Mode TX (–6 dBm): 24 mA**
  - **Power Mode 1 (3-µs Wake-Up): 235 µA**
  - **Power Mode 2 (Sleep Timer On): 0.9 µA**
  - **Power Mode 3 (External Interrupts): 0.4 µA**
  - **Wide Supply Voltage Range (2 V–3.6 V)**
  - **Full RAM and Register Retention in All Power Modes**
- **TPS62730 Compatible**
  Low Power in Active Mode
  - **RX Down to 15.8 mA (3 V Supply)**
  - **TX (-6 dBm): 18.6 mA (3 V Supply)**
- **Microcontroller**
  - **High-Performance and Low-Power 8051 Microcontroller Core**
  - **In-System-Programmable Flash, 128 KB or 256 KB**
  - **8-KB SRAM**
- **Peripherals**
  - **12-Bit ADC with Eight Channels and Configurable Resolution**
  - **Integrated High-Performance Op-Amp and Ultralow-Power Comparator**
  - **General-Purpose Timers (One 16-Bit, Two 8-Bit)**
  - **21 General-Purpose I/O Pins (19× 4 mA, 2× 20 mA)**
  - **32-kHz Sleep Timer With Capture**
  - **Two Powerful USARTs With Support for Several Serial Protocols**
  - **Full-Speed USB Interface**
  - **IR Generation Circuitry**
  - **Powerful Five-Channel DMA**
  - **AES Security Coprocessor**
  - **Battery Monitor and Temperature Sensor**
  - **Each CC2540 Contains a Unique 48-bit IEEE Address**

Please be aware that an important notice concerning availability, standard warranty, and use in critical applications of Texas Instruments semiconductor products and disclaimers thereto appears at the end of this data sheet.

SmartRF is a trademark of Texas Instruments.
Bluetooth is a registered trademark of Bluetooth SIG, Inc.
Supported by IAR Embedded Workbench is a trademark of IAR Systems AB.
ZigBee is a registered trademark of ZigBee Alliance.
All other trademarks are the property of their respective owners.

PRODUCTION DATA information is current as of publication date. Products conform to specifications per the terms of the Texas Instruments standard warranty. Production processing does not necessarily include testing of all parameters.

Copyright © 2010–2013, Texas Instruments Incorporated

SOFTWARE FEATURES

- ***Bluetooth* v4.0 Compliant Protocol Stack for Single-Mode BLE Solution**
  - **Complete Power-Optimized Stack, Including Controller and Host**
    - **GAP – Central, Peripheral, Observer, or Broadcaster (Including Combination Roles)**
    - **ATT / GATT – Client and Server**
    - **SMP – AES-128 Encryption and Decryption**
    - **L2CAP**
  - **Sample Applications and Profiles**
    - **Generic Applications for GAP Central and Peripheral Roles**
    - **Proximity, Accelerometer, Simple Keys, and Battery GATT Services**
  - **Multiple Configuration options**
    - **Single-Chip Configuration, Allowing Application to Run on CC2540**
    - **Network Processor Interface for Applications Running on an External Microcontroller**
  - **BTool – Windows PC Application for Evaluation, Development, and Test**
- **Development Tools**
  - **CC2540 Mini Development Kit**
  - **SmartRF™ Software**
  - **Supported by IAR Embedded Workbench™ Software for 8051**

APPLICATIONS

- **2.4-GHz *Bluetooth* low energy Systems**
- **Mobile Phone Accessories**
- **Sports and Leisure Equipment**
- **Consumer Electronics**
- **Human Interface Devices (Keyboard, Mouse, Remote Control)**
- **USB Dongles**
- **Health Care and Medical**

CC2540 WITH TPS62730

- **TPS62730 is a 2 MHz Step Down Converter with Bypass Mode**
- **Extends Battery Lifetime by up to 20%**
- **Reduced Current in TX and RX**
- **30 nA Bypass Mode Current to Support Low Power Modes**
- **RF Performance Unchanged**
- **Small Package Allows for Small Solution Size**
- **CC2540 Controllable**

DESCRIPTION

The CC2540 is a cost-effective, low-power, true system-on-chip (SoC) for *Bluetooth* low energy applications. It enables robust BLE master or slave nodes to be built with very low total bill-of-material costs. The CC2540 combines an excellent RF transceiver with an industry-standard enhanced 8051 MCU, in-system programmable flash memory, 8-KB RAM, and many other powerful supporting features and peripherals. The CC2540 is suitable for systems where very low power consumption is required. Very low-power sleep modes are available. Short transition times between operating modes further enable low power consumption.

The CC2540 comes in two different versions: CC2540F128/F256, with 128 and 256 KB of flash memory, respectively.

Combined with the *Bluetooth* low energy protocol stack from Texas Instruments, the CC2540F128/F256 forms the market's most flexible and cost-effective single-mode *Bluetooth* low energy solution.

Copyright © 2010–2013, Texas Instruments Incorporated

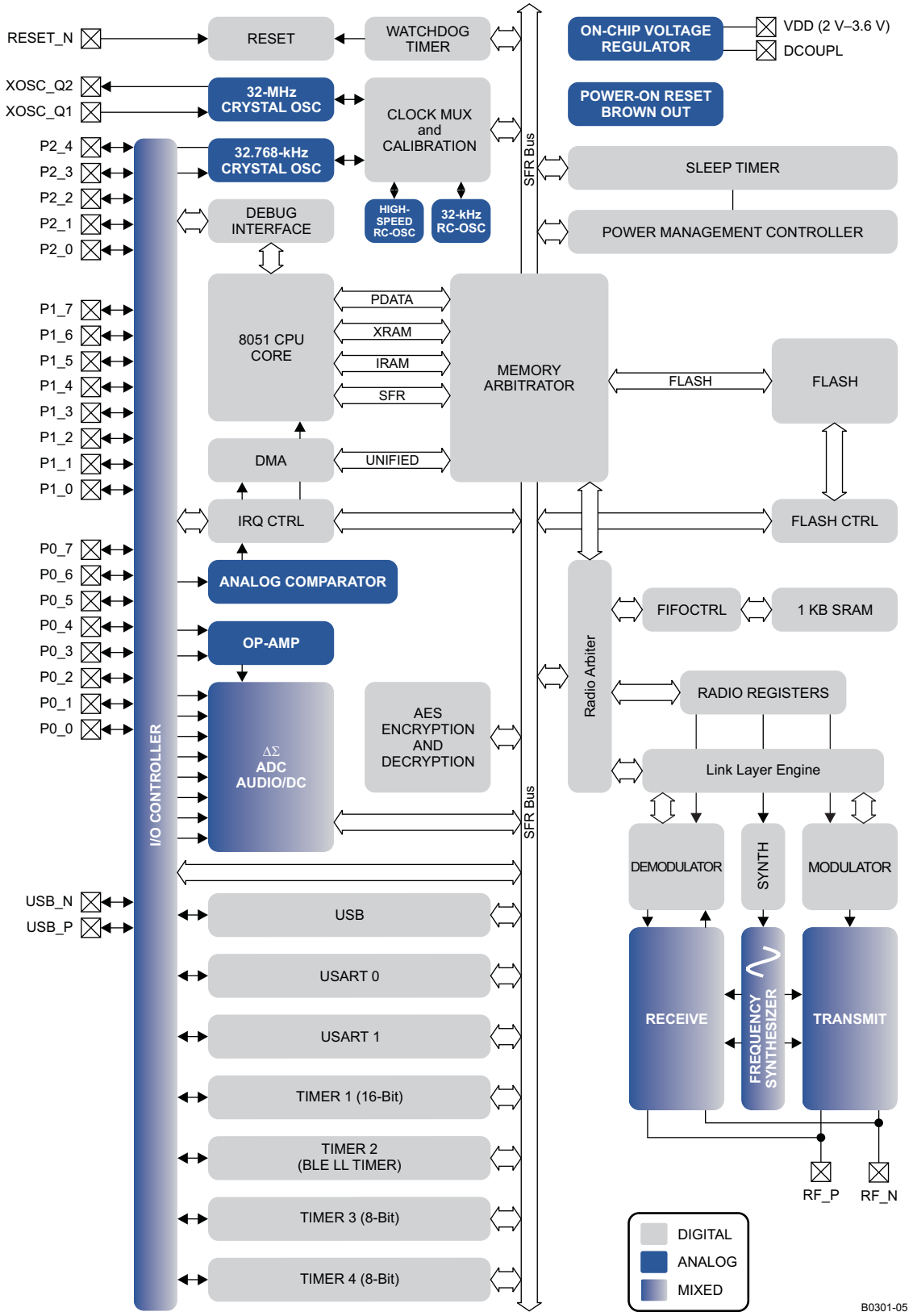
RESET_N
RESET
WATCHDOG TIMER
ON-CHIP VOLTAGE REGULATOR
VDD (2 V–3.6 V)
DCOUPL
XOSC_Q2
XOSC_Q1
32-MHz CRYSTAL OSC
CLOCK MUX and CALIBRATION
POWER-ON RESET BROWN OUT
P2_4
P2_3
P2_2
P2_1
P2_0
32.768-kHz CRYSTAL OSC
SFR Bus
SLEEP TIMER
DEBUG INTERFACE
HIGH-SPEED RC-OSC
32-kHz RC-OSC
POWER MANAGEMENT CONTROLLER
P1_7
P1_6
P1_5
P1_4
P1_3
P1_2
P1_1
P1_0
8051 CPU CORE
PDATA
XRAM
IRAM
SFR
MEMORY ARBITRATOR
FLASH
FLASH
DMA
UNIFIED
IRQ CTRL
FLASH CTRL
P0_7
P0_6
P0_5
P0_4
P0_3
P0_2
P0_1
P0_0
ANALOG COMPARATOR
FIFOCTRL
1 KB SRAM
OP-AMP
Radio Arbiter
RADIO REGISTERS
AES ENCRYPTION AND DECRYPTION
ΔΣ ADC AUDIO/DC
Link Layer Engine
I/O CONTROLLER
SFR Bus
DEMODULATOR
SYNTH
MODULATOR
USB_N
USB_P
USB
USART 0
USART 1
RECEIVE
FREQUENCY SYNTHESIZER
TRANSMIT
TIMER 1 (16-Bit)
TIMER 2 (BLE LL TIMER)
TIMER 3 (8-Bit)
TIMER 4 (8-Bit)
RF_P
RF_N
DIGITAL
ANALOG
MIXED
B0301-05

This integrated circuit can be damaged by ESD. Texas Instruments recommends that all integrated circuits be handled with appropriate precautions. Failure to observe proper handling and installation procedures can cause damage.

ESD damage can range from subtle performance degradation to complete device failure. Precision integrated circuits may be more susceptible to damage because very small parametric changes could cause the device not to meet its published specifications.

ABSOLUTE MAXIMUM RATINGS(1)

		MIN	MAX	UNIT
Supply voltage	All supply pins must have the same voltage	–0.3	3.9	V
Voltage on any digital pin		–0.3	VDD + 0.3, ≤ 3.9	V
Input RF level			10	dBm
Storage temperature range		–40	125	°C
ESD(2)	All pads, according to human-body model, JEDEC STD 22, method A114		2	kV
	According to charged-device model, JEDEC STD 22, method C101		750	V

(1) Stresses beyond those listed under *Absolute Maximum Ratings* may cause permanent damage to the device. These are stress ratings only, and functional operation of the device at these or any other conditions beyond those indicated under *Recommended Operating Conditions* is not implied. Exposure to absolute-maximum-rated conditions for extended periods may affect device reliability.
(2) CAUTION: ESD sensitive device. Precautions should be used when handing the device in order to prevent permanent damage.

RECOMMENDED OPERATING CONDITIONS

	MIN	MAX	UNIT
Operating ambient temperature range, T_A	–40	85	°C
Operating supply voltage	2	3.6	V

ELECTRICAL CHARACTERISTICS

Measured on Texas Instruments CC2540 EM reference design with T_A = 25°C and VDD = 3 V

PARAMETER		TEST CONDITIONS	MIN	TYP	MAX	UNIT
I_{core}	Core current consumption	Power mode 1. Digital regulator on; 16-MHz RCOSC and 32-MHz crystal oscillator off; 32.768-kHz XOSC, POR, BOD and sleep timer active; RAM and register retention		235		µA
		Power mode 2. Digital regulator off; 16-MHz RCOSC and 32-MHz crystal oscillator off; 32.768-kHz XOSC, POR, and sleep timer active; RAM and register retention		0.9		µA
		Power mode 3. Digital regulator off; no clocks; POR active; RAM and register retention		0.4		µA
		Low MCU activity: 32-MHz XOSC running. No radio or peripherals. No flash access, no RAM access.		6.7		mA
I_{peri}	Peripheral current consumption (Adds to core current I_{core} for each peripheral unit activated)	Timer 1. Timer running, 32-MHz XOSC used		90		µA
		Timer 2. Timer running, 32-MHz XOSC used		90		µA
		Timer 3. Timer running, 32-MHz XOSC used		60		µA
		Timer 4. Timer running, 32-MHz XOSC used		70		µA
		Sleep timer, including 32.753-kHz RCOSC		0.6		µA
		ADC, when converting		1.2		mA

Copyright © 2010–2013, Texas Instruments Incorporated

GENERAL CHARACTERISTICS

Measured on Texas Instruments CC2540 EM reference design with T_A = 25°C and VDD = 3 V

PARAMETER	TEST CONDITIONS	MIN	TYP	MAX	UNIT
WAKE-UP AND TIMING					
Power mode 1 → Active	Digital regulator on, 16-MHz RCOSC and 32-MHz crystal oscillator off. Start-up of 16-MHz RCOSC		4		µs
Power mode 2 or 3 → Active	Digital regulator off, 16-MHz RCOSC and 32-MHz crystal oscillator off. Start-up of regulator and 16-MHz RCOSC		120		µs
Active → TX or RX	Crystal ESR = 16 Ω. Initially running on 16-MHz RCOSC, with 32-MHz XOSC OFF		410		µs
	With 32-MHz XOSC initially on		160		µs
RX/TX turnaround			150		µs
RADIO PART					
RF frequency range	Programmable in 2-MHz steps	2402		2480	MHz
Data rate and modulation format	1 Mbps, GFSK, 250 kHz deviation				

RF RECEIVE SECTION

Measured on Texas Instruments CC2540 EM reference design with T_A = 25°C, VDD = 3 V, f_c = 2440 MHz
1 Mbps, GFSK, 250-kHz deviation, *Bluetooth* low energy mode, and 0.1% BER(1)

PARAMETER	TEST CONDITIONS	MIN	TYP	MAX	UNIT
Receiver sensitivity(2)	High-gain mode		–93		dBm
Receiver sensitivity(2)	Standard mode		–87		dBm
Saturation(3)			6		dBm
Co-channel rejection(3)			–5		dB
Adjacent-channel rejection(3)	±1 MHz		–5		dB
Alternate-channel rejection(3)	±2 MHz		30		dB
Blocking(3)			–30		dBm
Frequency error tolerance(4)	Including both initial tolerance and drift	–250		250	kHz
Symbol rate error tolerance(5)		–80		80	ppm
Spurious emission. Only largest spurious emission stated within each band.	Conducted measurement with a 50-Ω single-ended load. Complies with EN 300 328, EN 300 440 class 2, FCC CFR47, Part 15 and ARIB STD-T-66		–75		dBm
Current consumption	RX mode, standard mode, no peripherals active, low MCU activity, MCU at 250 kHz		19.6		mA
	RX mode, high-gain mode, no peripherals active, low MCU activity, MCU at 250 kHz		22.1		mA

(1) 0.1% BER maps to 30.8% PER
(2) The receiver sensitivity setting is programmable using a TI BLE stack vendor-specific API command. The default value is standard mode.
(3) Results based on standard gain mode
(4) Difference between center frequency of the received RF signal and local oscillator frequency
(5) Difference between incoming symbol rate and the internally generated symbol rate

Copyright © 2010–2013, Texas Instruments Incorporated

RF TRANSMIT SECTION

Measured on Texas Instruments CC2540 EM reference design with T_A = 25°C, VDD = 3 V and f_c = 2440 MHz

PARAMETER	TEST CONDITIONS	MIN	TYP	MAX	UNIT
Output power	Delivered to a single-ended 50-Ω load through a balun using maximum recommended output power setting		4		dBm
	Delivered to a single-ended 50-Ω load through a balun using minimum recommended output power setting		–23		
Programmable output power range	Delivered to a single-ended 50 Ω load through a balun		27		dB
Spurious emissions	Conducted measurement with a 50-Ω single-ended load. Complies with EN 300 328, EN 300 440 class 2, FCC CFR47, Part 15 and ARIB STD-T-66 (1)		–41		dBm
Current consumption	TX mode, –23-dBm output power, no peripherals active, low MCU activity, MCU at 250 kHz		21.1		mA
	TX mode, –6-dBm output power, no peripherals active, low MCU activity, MCU at 250 kHz		23.8		
	TX mode, 0-dBm output power, no peripherals active, low MCU activity, MCU at 250 kHz		27		
	TX mode, 4-dBm output power, no peripherals active, low MCU activity, MCU at 250 kHz		31.6		
Optimum load impedance	Differential impedance as seen from the RF port (RF_P and RF_N) toward the antenna		70 + j30		Ω

(1) Designs with antenna connectors that require conducted ETSI compliance at 64 MHz should insert an LC resonator in front of the antenna connector. Use a 1.6-nH inductor in parallel with a 1.8-pF capacitor. Connect both from the signal trace to a good RF ground.

CURRENT CONSUMPTION WITH TPS62730

Measured on Texas Instruments CC2540TPS62730 EM reference design with T_A = 25°C, VDD = 3 V, and f_c = 2440 MHZ.
1 **Mbps, GFSK, 250 kHz deviation, Bluetooth™ low energy mode, 1% BER** (1)

PARAMETER	TEST CONDITIONS	MIN	TYP	MAX	UNIT
Current Consumption	RX mode, standard mode, no peripherals active, low MCU activity, MCU at 1 MHZ		15.8		mA
	RX mode, high-gain mode, no peripherals active, low MCU activity, MCU at 1 MHZ		17.8		
	TX mode, -23 dBm output power, no peripherals active, low MCU activity, MCU at 1 MHZ		16.5		
	TX mode, -6 dBm output power, no peripherals active, low MCU activity, MCU at 1 MHZ		18.6		
	TX mode, 0 dBm output power, no peripherals active, low MCU activity, MCU at 1 MHZ		21		
	TX mode, 4 dBm output power, no peripherals active, low MCU activity, MCU at 1 MHZ		24.6		

(1) 0.1% BER maps to 30.8% PER

Copyright © 2010–2013, Texas Instruments Incorporated

32-MHz CRYSTAL OSCILLATOR

Measured on Texas Instruments CC2540 EM reference design with T_A = 25°C and VDD = 3 V

PARAMETER		TEST CONDITIONS	MIN	TYP	MAX	UNIT
	Crystal frequency			32		MHz
	Crystal frequency accuracy requirement(1)		–40		40	ppm
ESR	Equivalent series resistance		6		60	Ω
C_0	Crystal shunt capacitance		1		7	pF
C_L	Crystal load capacitance		10		16	pF
	Start-up time			0.25		ms
	Power-down guard time	The crystal oscillator must be in power down for a guard time before it is used again. This requirement is valid for all modes of operation. The need for power-down guard time can vary with crystal type and load.	3			ms

(1) Including aging and temperature dependency, as specified by [1]

32.768-kHz CRYSTAL OSCILLATOR

Measured on Texas Instruments CC2540 EM reference design with T_A = 25°C and VDD = 3 V

PARAMETER		TEST CONDITIONS	MIN	TYP	MAX	UNIT
	Crystal frequency			32.768		kHz
	Crystal frequency accuracy requirement(1)		–40		40	ppm
ESR	Equivalent series resistance			40	130	kΩ
C_0	Crystal shunt capacitance			0.9	2	pF
C_L	Crystal load capacitance			12	16	pF
	Start-up time			0.4		s

(1) Including aging and temperature dependency, as specified by [1]

32-kHz RC OSCILLATOR

Measured on Texas Instruments CC2540 EM reference design with T_ω = 25°C and VDD = 3 V.

PARAMETER	TEST CONDITIONS	MIN	TYP	MAX	UNIT
Calibrated frequency(1)			32.753		kHz
Frequency accuracy after calibration			±0.2%		
Temperature coefficient(2)			0.4		%/°C
Supply-voltage coefficient(3)			3		%/V
Calibration time(4)			2		ms

(1) The calibrated 32-kHz RC oscillator frequency is the 32-MHz XTAL frequency divided by 977.
(2) Frequency drift when temperature changes after calibration
(3) Frequency drift when supply voltage changes after calibration
(4) When the 32-kHz RC oscillator is enabled, it is calibrated when a switch from the 16-MHz RC oscillator to the 32-MHz crystal oscillator is performed while SLEEPCMD.OSC32K_CALDIS is set to 0.

Copyright © 2010–2013, Texas Instruments Incorporated

16-MHz RC OSCILLATOR

Measured on Texas Instruments CC2540 EM reference design with T_A = 25°C and VDD = 3 V

PARAMETER	TEST CONDITIONS	MIN	TYP	MAX	UNIT
Frequency(1)			16		MHz
Uncalibrated frequency accuracy			±18%		
Calibrated frequency accuracy			±0.6%		
Start-up time			10		µs
Initial calibration time(2)			50		µs

(1) The calibrated 16-MHz RC oscillator frequency is the 32-MHz XTAL frequency divided by 2.
(2) When the 16-MHz RC oscillator is enabled, it is calibrated when a switch from the 16-MHz RC oscillator to the 32-MHz crystal oscillator is performed while SLEEPCMD.OSC_PD is set to 0.

RSSI CHARACTERISTICS

Measured on Texas Instruments CC2540 EM reference design with T_A = 25°C and VDD = 3 V

PARAMETER	TEST CONDITIONS	MIN	TYP	MAX	UNIT
Useful RSSI range(1)	High-gain mode		–99 to –44		dBm
	Standard mode		–90 to –35		
Absolute uncalibrated RSSI accuracy(1)	High-gain mode		±4		dB
Step size (LSB value)			1		dB

(1) Assuming CC2540 EM reference design. Other RF designs give an offset from the reported value.

FREQUENCY SYNTHESIZER CHARACTERISTICS

Measured on Texas Instruments CC2540 EM reference design with T_A = 25°C, VDD = 3 V and f_c = 2440 MHz

PARAMETER	TEST CONDITIONS	MIN	TYP	MAX	UNIT
Phase noise, unmodulated carrier	At ±1-MHz offset from carrier		–109		dBc/Hz
	At ±3-MHz offset from carrier		–112		
	At ±5-MHz offset from carrier		–119		

ANALOG TEMPERATURE SENSOR

Measured on Texas Instruments CC2540 EM reference design with T_A = 25°C and VDD = 3 V

PARAMETER	TEST CONDITIONS	MIN	TYP	MAX	UNIT
Output	Measured using integrated ADC, internal band-gap voltage reference, and maximum resolution		1480		12-bit
Temperature coefficient			4.5		/1°C
Voltage coefficient			1		/ 0.1 V
Initial accuracy without calibration			±10		°C
Accuracy using 1-point calibration			±5		°C
Current consumption when enabled			0.5		mA

Copyright © 2010–2013, Texas Instruments Incorporated

OP-AMP CHARACTERISTICS

T_A = 25°C, VDD = 3 V, . All measurement results are obtained using the CC2540 reference designs post-calibration.

PARAMETER		TEST CONDITIONS	MIN	TYP	MAX	UNIT
Chopping Configuration, Register APCFG = 0x07, OPAMPMC = 0x03, OPAMPC = 0x01						
	Output maximum voltage			VDD – 0.1		V
	Output minimum voltage			0.1		V
	Open-loop gain			108		dB
	Gain-bandwidth product			2		MHz
	Slew rate			2.6		V/µs
	Input maximum voltage			VDD		V
	Intput minimum voltage			0		mV
	Input offset voltage			40		µV
CMRR	Common-mode rejection ratio			90		dB
	Supply current			0.4		mA
	Input noise voltage	f = 0.01 Hz to 1 Hz		1.1		nV/√(Hz)
		f = 0.1 Hz to 10 Hz		1.7		
Non-Chopping Configuration, Register APCFG = 0x07, OPAMPMC = 0x00, OPAMPC = 0x01						
	Output maximum voltage			VDD – 0.1		V
	Output minimum voltage			0.1		V
	Open-loop gain			108		dB
	Gain-bandwidth product			2		MHz
	Slew rate			2.6		V/µs
	Input maximum voltage			VDD		V
	Intput minimum voltage			0		mV
	Input offset voltage			3.2		mV
CMRR	Common-mode rejection ratio			90		dB
	Supply current			0.4		mA
	Input noise voltage	f = 0.01 Hz to 1 Hz		60		nV/√(Hz)
		f = 0.1 Hz to 10 Hz		65		

COMPARATOR CHARACTERISTICS

T_A = 25°C, VDD = 3 V. All measurement results are obtained using the CC2540 reference designs, post-calibration.

PARAMETER	TEST CONDITIONS	MIN	TYP	MAX	UNIT
Common-mode maximum voltage			VDD		V
Common-mode minimum voltage			–0.3		
Input offset voltage			1		mV
Offset vs temperature			16		µV/°C
Offset vs operating voltage			4		mV/V
Supply current			230		nA
Hysteresis			0.15		mV

Copyright © 2010–2013, Texas Instruments Incorporated

ADC CHARACTERISTICS

T_A = 25°C and VDD = 3 V

PARAMETER		TEST CONDITIONS	MIN	TYP	MAX	UNIT
	Input voltage	VDD is voltage on AVDD5 pin	0		VDD	V
	External reference voltage	VDD is voltage on AVDD5 pin	0		VDD	V
	External reference voltage differential	VDD is voltage on AVDD5 pin	0		VDD	V
	Input resistance, signal	Simulated using 4-MHz clock speed		197		kΩ
	Full-scale signal (1)	Peak-to-peak, defines 0 dBFS		2.97		V
ENOB (1)	Effective number of bits	Single-ended input, 7-bit setting		5.7		bits
		Single-ended input, 9-bit setting		7.5		
		Single-ended input, 10-bit setting		9.3		
		Single-ended input, 12-bit setting		10.3		
		Differential input, 7-bit setting		6.5		
		Differential input, 9-bit setting		8.3		
		Differential input, 10-bit setting		10		
		Differential input, 12-bit setting		11.5		
		10-bit setting, clocked by RCOSC		9.7		
		12-bit setting, clocked by RCOSC		10.9		
	Useful power bandwidth	7-bit setting, both single and differential		0–20		kHz
THD	Total harmonic distortion	Single ended input, 12-bit setting, –6 dBFS (1)		–75.2		dB
		Differential input, 12-bit setting, –6 dBFS (1)		–86.6		
	Signal to nonharmonic ratio	Single-ended input, 12-bit setting (1)		70.2		dB
		Differential input, 12-bit setting (1)		79.3		
		Single-ended input, 12-bit setting, –6 dBFS (1)		78.8		
		Differential input, 12-bit setting, –6 dBFS (1)		88.9		
CMRR	Common-mode rejection ratio	Differential input, 12-bit setting, 1-kHz sine (0 dBFS), limited by ADC resolution		>84		dB
	Crosstalk	Single ended input, 12-bit setting, 1-kHz sine (0 dBFS), limited by ADC resolution		>84		dB
	Offset	Midscale		–3		mV
	Gain error			0.68%		
DNL	Differential nonlinearity	12-bit setting, mean (1)		0.05		LSB
		12-bit setting, maximum (1)		0.9		
INL	Integral nonlinearity	12-bit setting, mean (1)		4.6		LSB
		12-bit setting, maximum (1)		13.3		
		12-bit setting, mean, clocked by RCOSC		10		
		12-bit setting, max, clocked by RCOSC		29		
SINAD (–THD+N)	Signal-to-noise-and-distortion	Single ended input, 7-bit setting (1)		35.4		dB
		Single ended input, 9-bit setting (1)		46.8		
		Single ended input, 10-bit setting (1)		57.5		
		Single ended input, 12-bit setting (1)		66.6		
		Differential input, 7-bit setting (1)		40.7		
		Differential input, 9-bit setting (1)		51.6		
		Differential input, 10-bit setting (1)		61.8		
		Differential input, 12-bit setting (1)		70.8		

(1) Measured with 300-Hz sine-wave input and VDD as reference.

Copyright © 2010–2013, Texas Instruments Incorporated

ADC CHARACTERISTICS (continued)

T_A = 25°C and VDD = 3 V

PARAMETER	TEST CONDITIONS	MIN	TYP	MAX	UNIT
Conversion time	7-bit setting		20		µs
	9-bit setting		36		
	10-bit setting		68		
	12-bit setting		132		
Power consumption			1.2		mA
Internal reference VDD coefficient			4		mV/V
Internal reference temperature coefficient			0.4		mV/10°C
Internal reference voltage			1.24		V

CONTROL INPUT AC CHARACTERISTICS

T_A = –40°C to 85°C, VDD = 2 V to 3.6 V.

PARAMETER	TEST CONDITIONS	MIN	TYP	MAX	UNIT
System clock, f_{SYSCLK} $t_{SYSCLK} = 1/ f_{SYSCLK}$	The undivided system clock is 32 MHz when crystal oscillator is used. The undivided system clock is 16 MHz when calibrated 16-MHz RC oscillator is used.	16		32	MHz
RESET_N low duration	See item 1, Figure 1. This is the shortest pulse that is recognized as a complete reset pin request. Note that shorter pulses may be recognized but do not lead to complete reset of all modules within the chip.	1			µs
Interrupt pulse duration	See item 2, Figure 1.This is the shortest pulse that is recognized as an interrupt request.	20			ns

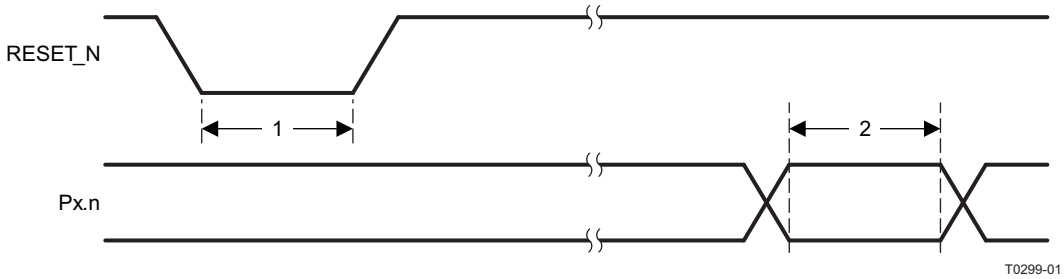

Figure 1. Control Input AC Characteristics

SPI AC CHARACTERISTICS

T_A = –40°C to 85°C, VDD = 2 V to 3.6 V

PARAMETER		TEST CONDITIONS	MIN	TYP	MAX	UNIT
t_1	SCK period	Master, RX and TX	250			ns
		Slave, RX and TX	250			
	SCK duty cycle	Master		50%		
t_2	SSN low to SCK	Master	63			ns
		Slave	63			
t_3	SCK to SSN high	Master	63			ns
		Slave	63			
t_4	MOSI early out	Master, load = 10 pF			7	ns
t_5	MOSI late out	Master, load = 10 pF			10	ns
t_6	MISO setup	Master	90			ns
t_7	MISO hold	Master	10			ns
	SCK duty cycle	Slave		50%		ns
t_{10}	MOSI setup	Slave	35			ns
t_{11}	MOSI hold	Slave	10			ns
t_9	MISO late out	Slave, load = 10 pF			95	ns
	Operating frequency	Master, TX only			8	MHz
		Master, RX and TX			4	
		Slave, RX only			8	
		Slave, RX and TX			4	

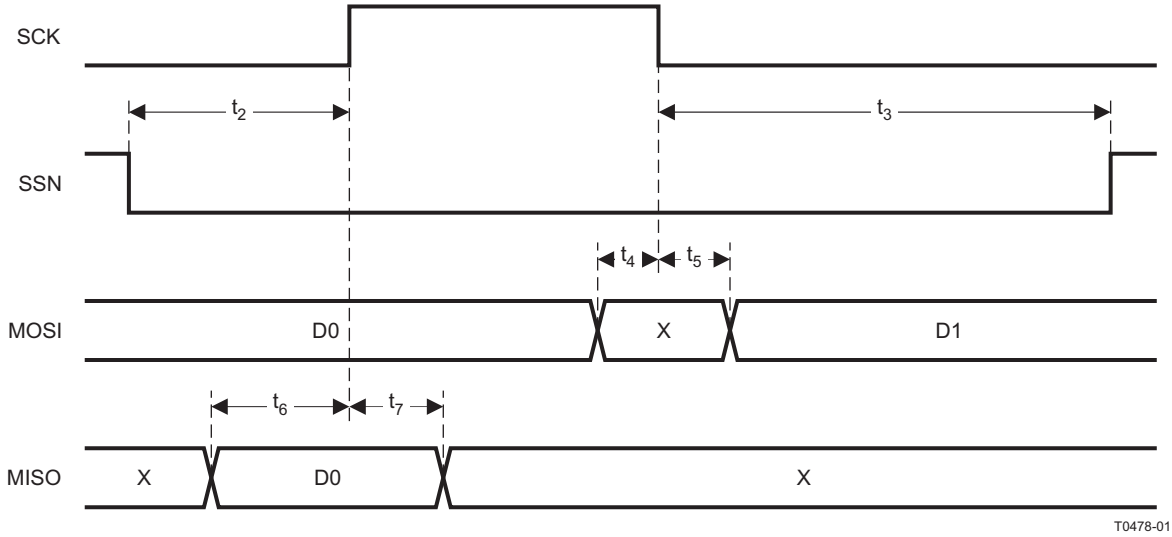

Figure 2. SPI Master AC Characteristics

Copyright © 2010–2013, Texas Instruments Incorporated

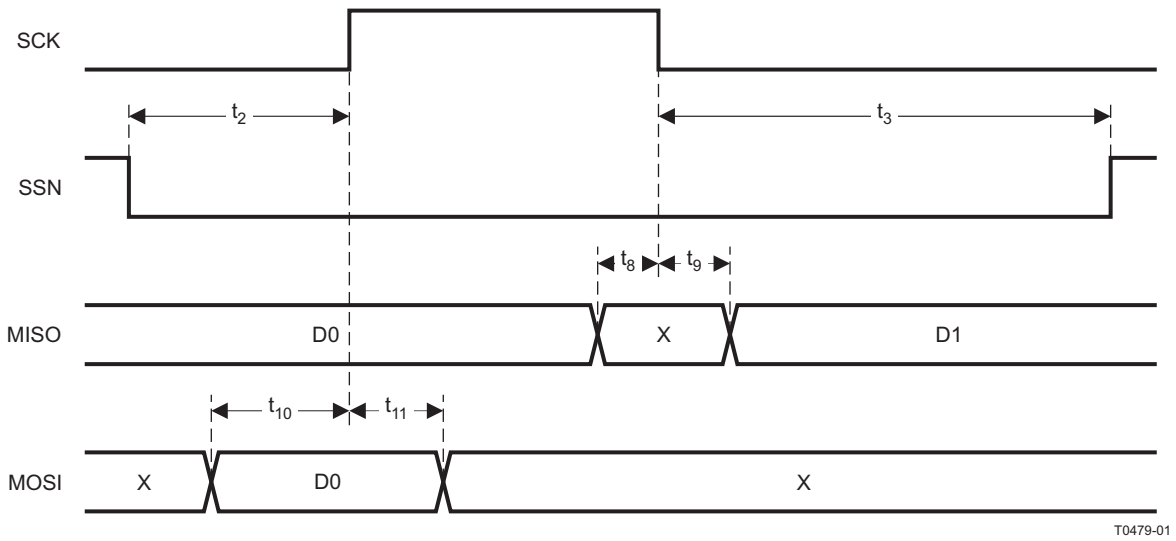

Figure 3. SPI Slave AC Characteristics

DEBUG INTERFACE AC CHARACTERISTICS

T_A = –40°C to 85°C, VDD = 2 V to 3.6 V

PARAMETER		TEST CONDITIONS	MIN	TYP	MAX	UNIT
f_{clk_dbg}	Debug clock frequency (see Figure 4)				12	MHz
t_1	Allowed high pulse on clock (see Figure 4)		35			ns
t_2	Allowed low pulse on clock (see Figure 4)		35			ns
t_3	EXT_RESET_N low to first falling edge on debug clock (see Figure 6)		167			ns
t_4	Falling edge on clock to EXT_RESET_N high (see Figure 6)		83			ns
t_5	EXT_RESET_N high to first debug command (see Figure 6)		83			ns
t_6	Debug data setup (see Figure 5)		2			ns
t_7	Debug data hold (see Figure 5)		4			ns
t_8	Clock-to-data delay (see Figure 5)	Load = 10 pF			30	ns

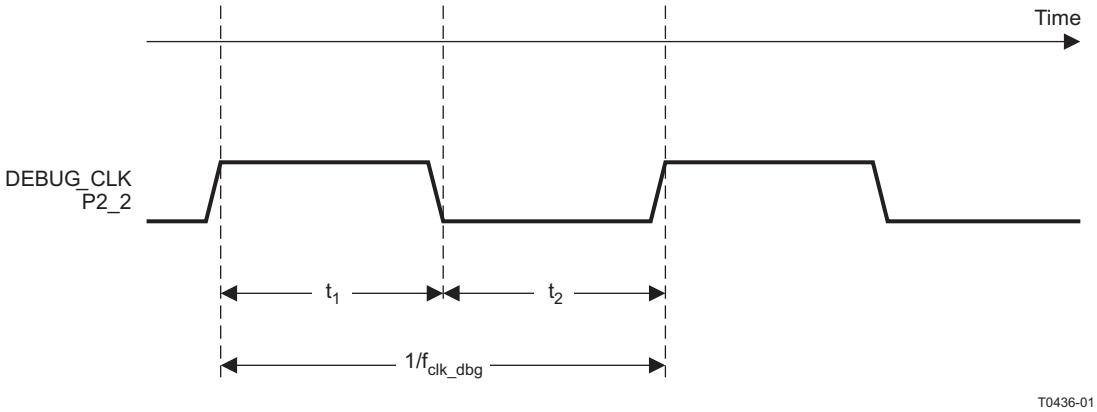

Figure 4. Debug Clock – Basic Timing

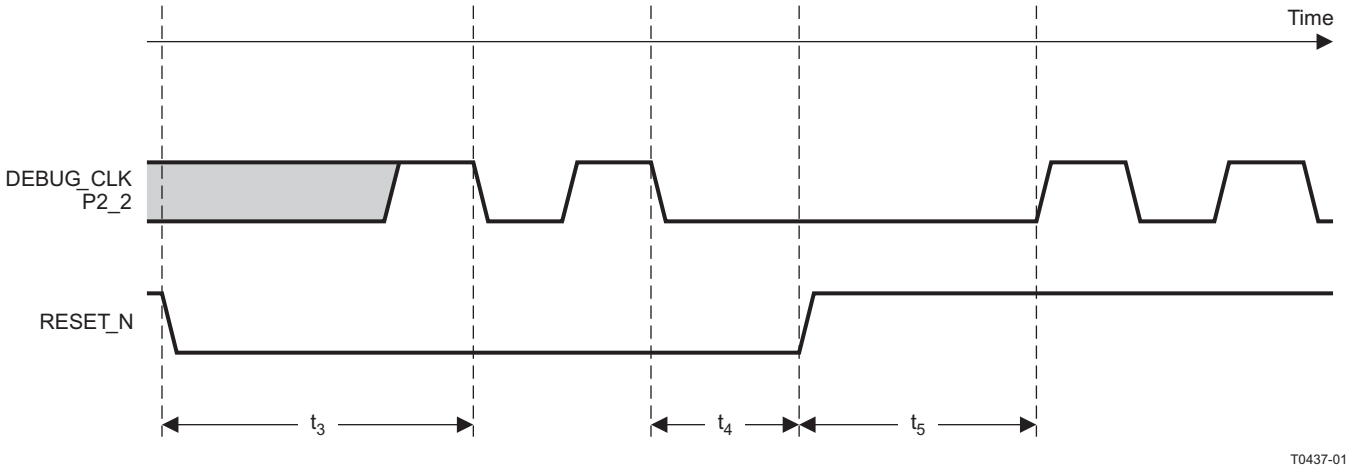

Figure 5. Debug Enable Timing

Copyright © 2010–2013, Texas Instruments Incorporated

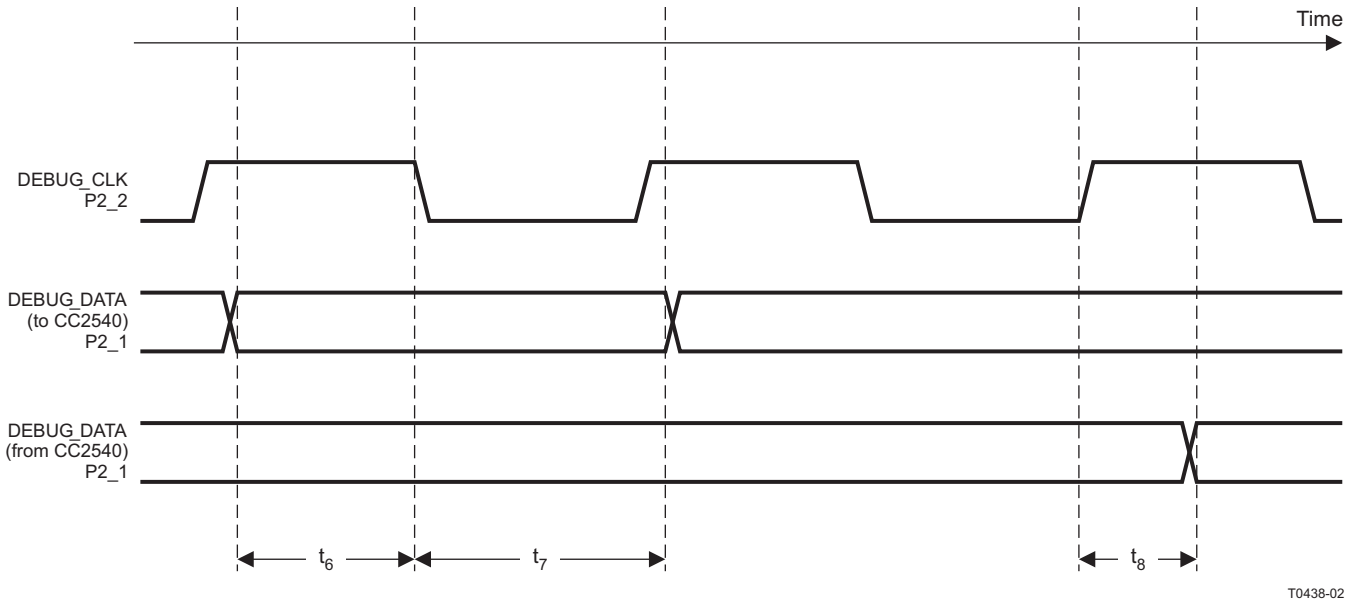

Figure 6. Data Setup and Hold Timing

TIMER INPUTS AC CHARACTERISTICS

T_A = –40°C to 85°C, VDD = 2 V to 3.6 V

PARAMETER	TEST CONDITIONS	MIN	TYP	MAX	UNIT
Input capture pulse duration	Synchronizers determine the shortest input pulse that can be recognized. The synchronizers operate at the current system clock rate (16 MHz or 32 MHz).	1.5			t_{SYSCLK}

DC CHARACTERISTICS

T_A = 25°C, VDD = 3 V

PARAMETER	TEST CONDITIONS	MIN	TYP	MAX	UNIT
Logic-0 input voltage				0.5	V
Logic-1 input voltage		2.5			V
Logic-0 input current	Input equals 0 V	–50		50	nA
Logic-1 input current	Input equals VDD	–50		50	nA
I/O-pin pullup and pulldown resistors			20		kΩ
Logic-0 output voltage, 4- mA pins	Output load 4 mA			0.5	V
Logic-1 output voltage, 4-mA pins	Output load 4 mA	2.4			V

Copyright © 2010–2013, Texas Instruments Incorporated

DEVICE INFORMATION

PIN DESCRIPTIONS

The CC2540 pinout is shown in Figure 7 and a short description of the pins follows.

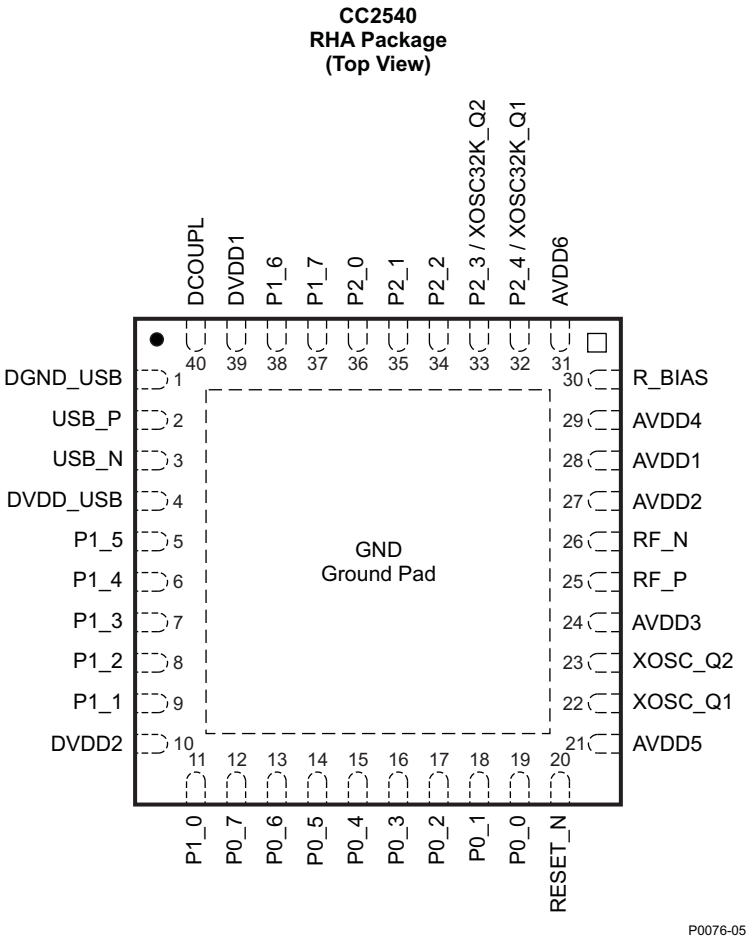

NOTE: The exposed ground pad must be connected to a solid ground plane, as this is the ground connection for the chip.

Figure 7. Pinout Top View

Copyright © 2010–2013, Texas Instruments Incorporated

PIN DESCRIPTIONS

PIN NAME	PIN	PIN TYPE	DESCRIPTION
AVDD1	28	Power (analog)	2-V–3.6-V analog power-supply connection
AVDD2	27	Power (analog)	2-V–3.6-V analog power-supply connection
AVDD3	24	Power (analog)	2-V–3.6-V analog power-supply connection
AVDD4	29	Power (analog)	2-V–3.6-V analog power-supply connection
AVDD5	21	Power (analog)	2-V–3.6-V analog power-supply connection
AVDD6	31	Power (analog)	2-V–3.6-V analog power-supply connection
DCOUPL	40	Power (digital)	1.8-V digital power-supply decoupling. Do not use for supplying external circuits.
DGND_USB	1	Ground pin	Connect to GND
DVDD_USB	4	Power (digital)	2-V–3.6-V digital power-supply connection
DVDD1	39	Power (digital)	2-V–3.6-V digital power-supply connection
DVDD2	10	Power (digital)	2-V–3.6-V digital power-supply connection
GND	—	Ground	The ground pad must be connected to a solid ground plane.
P0_0	19	Digital I/O	Port 0.0
P0_1	18	Digital I/O	Port 0.1
P0_2	17	Digital I/O	Port 0.2
P0_3	16	Digital I/O	Port 0.3
P0_4	15	Digital I/O	Port 0.4
P0_5	14	Digital I/O	Port 0.5
P0_6	13	Digital I/O	Port 0.6
P0_7	12	Digital I/O	Port 0.7
P1_0	11	Digital I/O	Port 1.0 – 20-mA drive capability
P1_1	9	Digital I/O	Port 1.1 – 20-mA drive capability
P1_2	8	Digital I/O	Port 1.2
P1_3	7	Digital I/O	Port 1.3
P1_4	6	Digital I/O	Port 1.4
P1_5	5	Digital I/O	Port 1.5
P1_6	38	Digital I/O	Port 1.6
P1_7	37	Digital I/O	Port 1.7
P2_0	36	Digital I/O	Port 2.0
P2_1	35	Digital I/O	Port 2.1
P2_2	34	Digital I/O	Port 2.2
P2_3/ XOSC32K_Q2	33	Digital I/O, Analog I/O	Port 2.3/32.768 kHz XOSC
P2_4/ XOSC32K_Q1	32	Digital I/O, Analog I/O	Port 2.4/32.768 kHz XOSC
RBIAS	30	Analog I/O	External precision bias resistor for reference current
RESET_N	20	Digital input	Reset, active-low
RF_N	26	RF I/O	Negative RF input signal to LNA during RX Negative RF output signal from PA during TX
RF_P	25	RF I/O	Positive RF input signal to LNA during RX Positive RF output signal from PA during TX
USB_N	3	Digital I/O	USB N
USB_P	2	Digital I/O	USB P
XOSC_Q1	22	Analog I/O	32-MHz crystal oscillator pin 1 or external-clock input
XOSC_Q2	23	Analog I/O	32-MHz crystal oscillator pin 2

Copyright © 2010–2013, Texas Instruments Incorporated

BLOCK DIAGRAM

A block diagram of the CC2540 is shown in Figure 8. The modules can be roughly divided into one of three categories: CPU-related modules; modules related to power, test, and clock distribution; and radio-related modules. In the following subsections, a short description of each module is given.

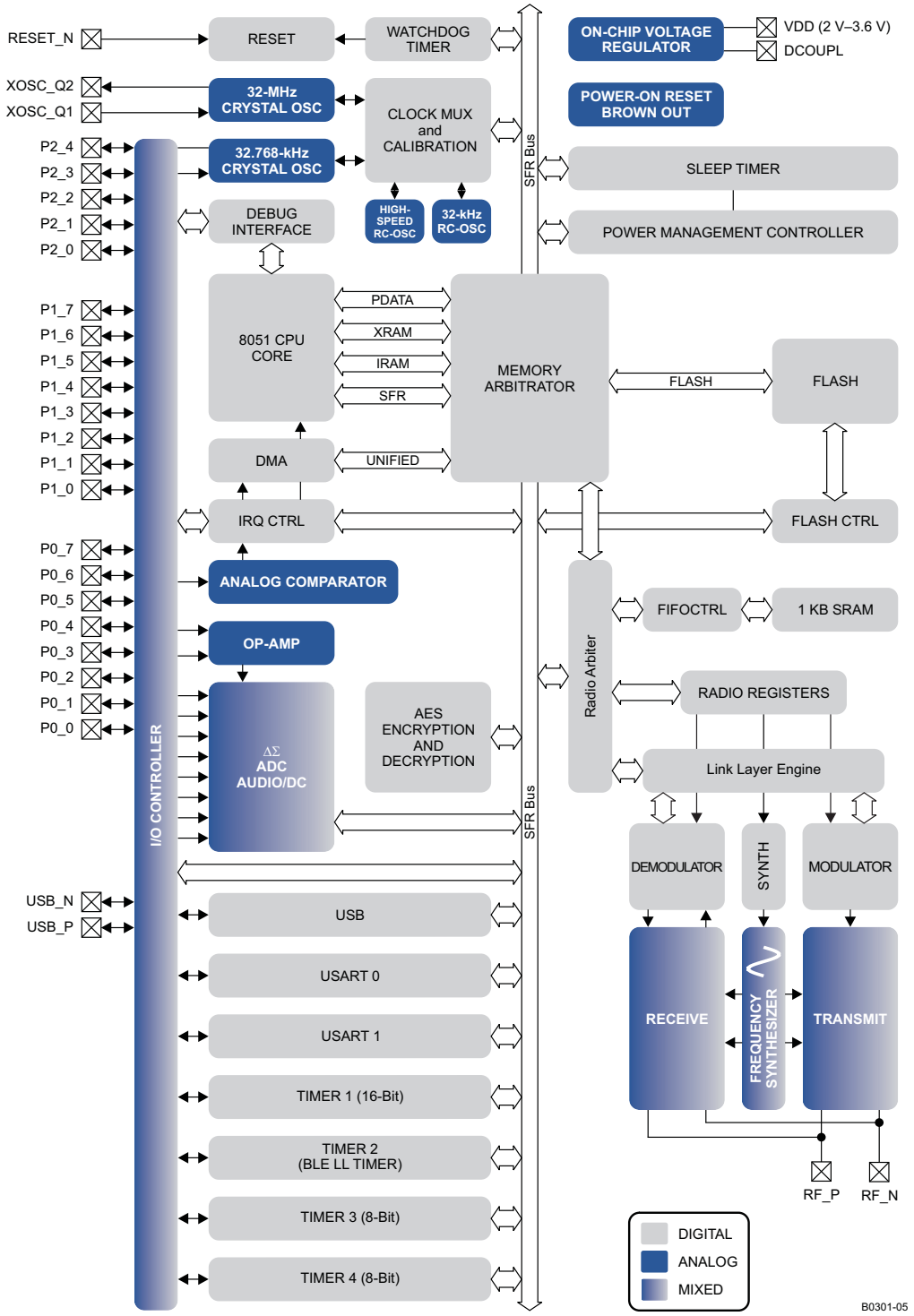

Figure 8. CC2540 Block Diagram

Copyright © 2010–2013, Texas Instruments Incorporated

BLOCK DESCRIPTIONS

CPU and Memory

The **8051 CPU core** is a single-cycle 8051-compatible core. It has three different memory access busses (SFR, DATA, and CODE/XDATA), a debug interface, and an 18-input extended interrupt unit.

The **memory arbiter** is at the heart of the system, as it connects the CPU and DMA controller with the physical memories and all peripherals through the SFR bus. The memory arbiter has four memory-access points, access of which can map to one of three physical memories: an SRAM, flash memory, and XREG/SFR registers. It is responsible for performing arbitration and sequencing between simultaneous memory accesses to the same physical memory.

The **SFR bus** is drawn conceptually in Figure 8 as a common bus that connects all hardware peripherals to the memory arbiter. The SFR bus in the block diagram also provides access to the radio registers in the radio register bank, even though these are indeed mapped into XDATA memory space.

The **8-KB SRAM** maps to the DATA memory space and to parts of the XDATA memory spaces. The SRAM is an ultralow-power SRAM that retains its contents even when the digital part is powered off (power modes 2 and 3).

The **128/256 KB flash block** provides in-circuit programmable non-volatile program memory for the device, and maps into the CODE and XDATA memory spaces.

Peripherals

Writing to the flash block is performed through a **flash controller** that allows page-wise erasure and 4-bytewise programming. See User Guide for details on the flash controller.

A versatile five-channel **DMA controller** is available in the system, accesses memory using the XDATA memory space, and thus has access to all physical memories. Each channel (trigger, priority, transfer mode, addressing mode, source and destination pointers, and transfer count) is configured with DMA descriptors that can be located anywhere in memory. Many of the hardware peripherals (AES core, flash controller, USARTs, timers, ADC interface, etc.) can be used with the DMA controller for efficient operation by performing data transfers between a single SFR or XREG address and flash/SRAM.

Each CC2540 contains a unique 48-bit IEEE address that can be used as the public device address for a *Bluetooth* device. Designers are free to use this address, or provide their own, as described in the *Bluetooth* specfication.

The **interrupt controller** services a total of 18 interrupt sources, divided into six interrupt groups, each of which is associated with one of four interrupt priorities. I/O and sleep timer interrupt requests are serviced even if the device is in a sleep mode (power modes 1 and 2) by bringing the CC2540 back to the active mode.

The **debug interface** implements a proprietary two-wire serial interface that is used for in-circuit debugging. Through this debug interface, it is possible to erase or program the entire flash memory, control which oscillators are enabled, stop and start execution of the user program, execute instructions on the 8051 core, set code breakpoints, and single-step through instructions in the code. Using these techniques, it is possible to perform in-circuit debugging and external flash programming elegantly.

The **I/O controller** is responsible for all general-purpose I/O pins. The CPU can configure whether peripheral modules control certain pins or whether they are under software control, and if so, whether each pin is configured as an input or output and if a pullup or pulldown resistor in the pad is connected. Each peripheral that connects to the I/O pins can choose between two different I/O pin locations to ensure flexibility in various applications.

The **sleep timer** is an ultralow-power timer that can either use an external 32.768-kHz crystal oscillator or an internal 32.753-kHz RC oscillator. The sleep timer runs continuously in all operating modes except power mode 3. Typical applications of this timer are as a real-time counter or as a wake-up timer to get out of power modes 1 or 2.

A built-in **watchdog timer** allows the CC2540 to reset itself if the firmware hangs. When enabled by software, the watchdog timer must be cleared periodically; otherwise, it resets the device when it times out.

Copyright © 2010–2013, Texas Instruments Incorporated

Timer 1 is a 16-bit timer with timer/counter/PWM functionality. It has a programmable prescaler, a 16-bit period value, and five individually programmable counter/capture channels, each with a 16-bit compare value. Each of the counter/capture channels can be used as a PWM output or to capture the timing of edges on input signals. It can also be configured in IR generation mode, where it counts timer 3 periods and the output is ANDed with the output of timer 3 to generate modulated consumer IR signals with minimal CPU interaction.

Timer 2 is a 40-bit timer used by the *Bluetooth* low energy stack. It has a 16-bit counter with a configurable timer period and a 24-bit overflow counter that can be used to keep track of the number of periods that have transpired. A 40-bit capture register is also used to record the exact time at which a start-of-frame delimiter is received/transmitted or the exact time at which transmission ends. There are two 16-bit timer-compare registers and two 24-bit overflow-compare registers that can be used to give exact timing for start of RX or TX to the radio or general interrupts.

Timer 3 and timer 4 are 8-bit timers with timer/counter/PWM functionality. They have a programmable prescaler, an 8-bit period value, and one programmable counter channel with an 8-bit compare value. Each of the counter channels can be used as PWM output.

USART 0 and USART 1 are each configurable as either an SPI master/slave or a UART. They provide double buffering on both RX and TX and hardware flow control and are thus well suited to high-throughput full-duplex applications. Each USART has its own high-precision baud-rate generator, thus leaving the ordinary timers free for other uses. When configured as SPI slaves, the USARTs sample the input signal using SCK directly instead of using some oversampling scheme, and are thus well-suited for high data rates.

The **AES encryption/decryption core** allows the user to encrypt and decrypt data using the AES algorithm with 128-bit keys. The AES core also supports ECB, CBC, CFB, OFB, CTR, and CBC-MAC, as well as hardware support for CCM.

The **ADC** supports 7 to 12 bits of resolution with a corresponding range of bandwidths from 30-kHz to 4-kHz, respectively. DC and audio conversions with up to eight input channels (I/O controller pins) are possible. The inputs can be selected as single-ended or differential. The reference voltage can be internal, AVDD, or a single-ended or differential external signal. The ADC also has a temperature-sensor input channel. The ADC can automate the process of periodic sampling or conversion over a sequence of channels.

The **operational amplifier** is intended to provide front-end buffering and gain for the ADC. Both inputs as well as the output are available on pins, so the feedback network is fully customizable. A chopper-stabilized mode is available for applications that need good accuracy with high gain.

The ultralow-power **analog comparator** enables applications to wake up from PM2 or PM3 based on an analog signal. Both inputs are brought out to pins; the reference voltage must be provided externally. The comparator output is connected to the I/O controller interrupt detector and can be treated by the MCU as a regular I/O pin interrupt.

Copyright © 2010–2013, Texas Instruments Incorporated

TYPICAL CHARACTERISTICS

RX CURRENT IN WAIT FOR SYNC vs TEMPERATURE

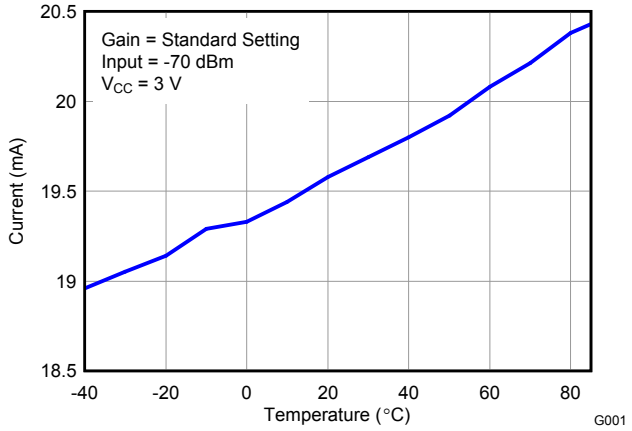

Figure 9.

TX CURRENT vs TEMPERATURE

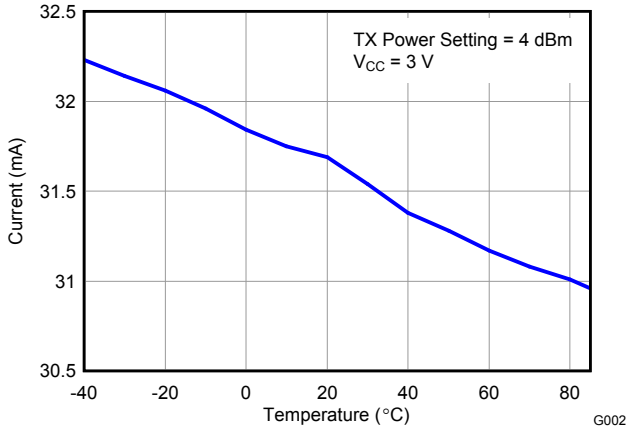

Figure 10.

RX SENSITIVITY vs TEMPERATURE

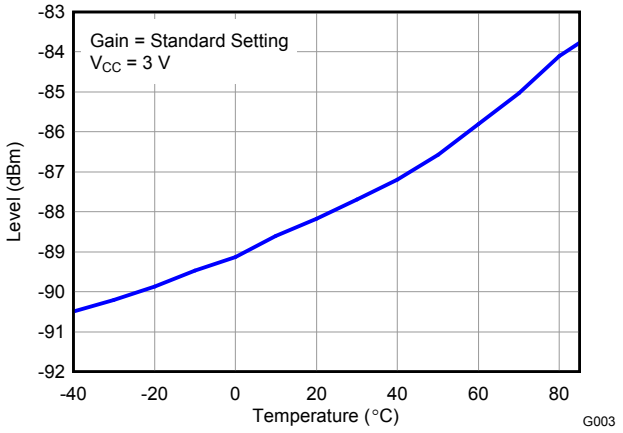

Figure 11.

TX POWER vs TEMPERATURE

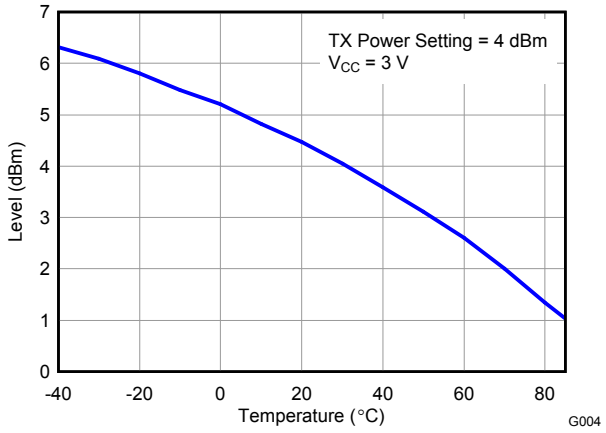

Figure 12.

RX CURRENT IN WAIT FOR SYNC vs SUPPLY VOLTAGE

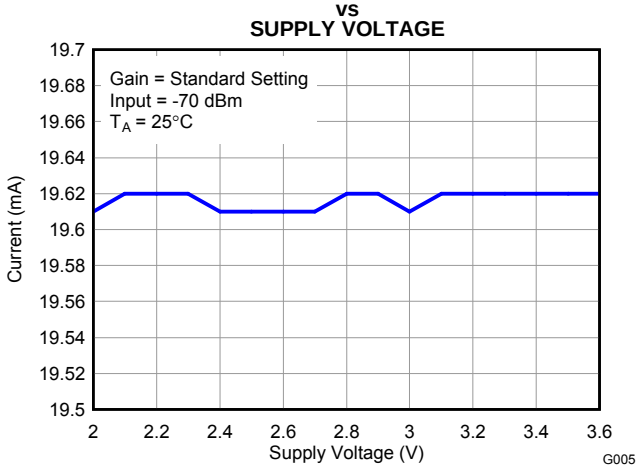

Figure 13.

TX CURRENT vs SUPPLY VOLTAGE

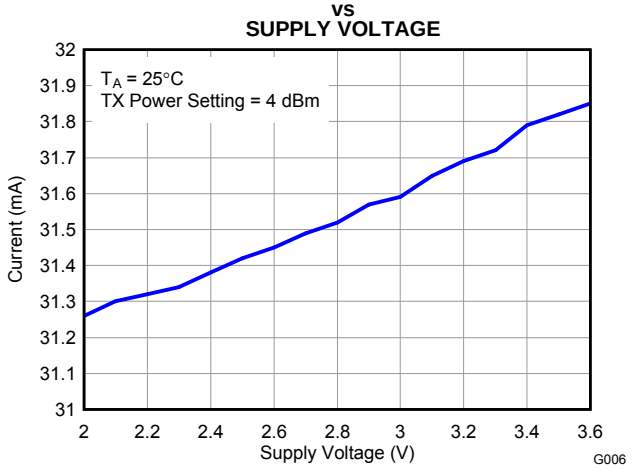

Figure 14.

TYPICAL CHARACTERISTICS (continued)

RX SENSITIVITY vs SUPPLY VOLTAGE

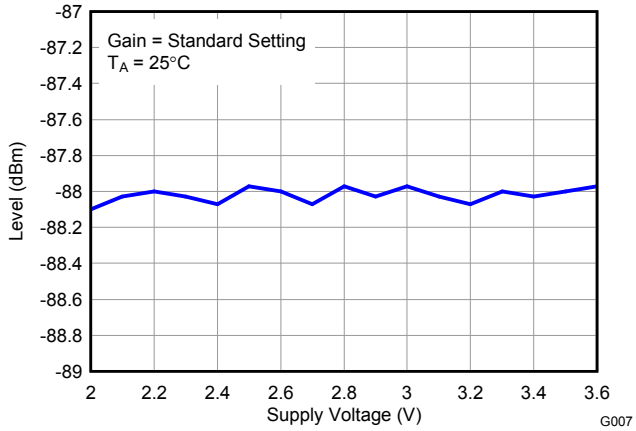

Figure 15.

TX POWER vs SUPPLY VOLTAGE

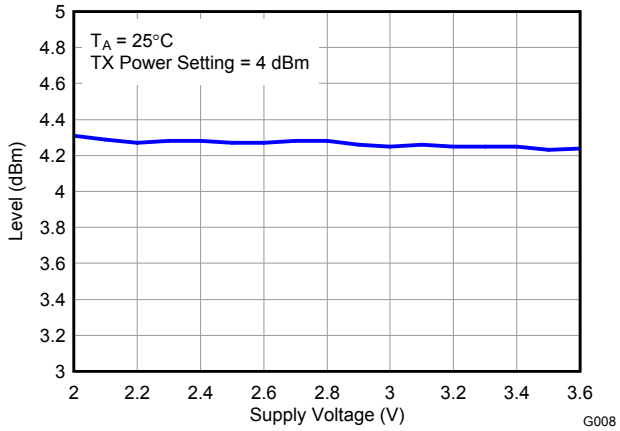

Figure 16.

RX SENSITIVITY vs FREQUENCY

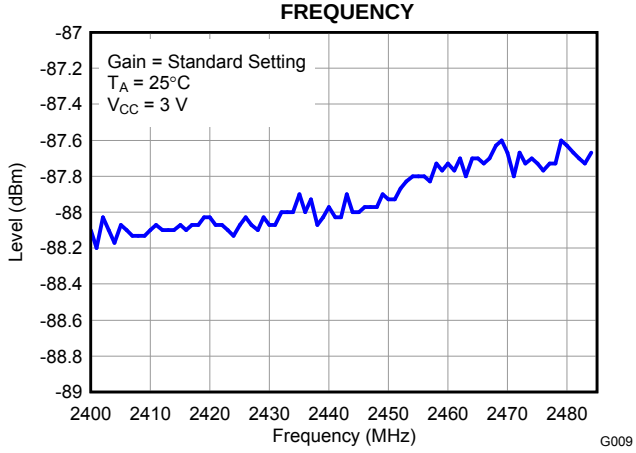

Figure 17.

RX INTERFERER REJECTION (SELECTIVITY) vs INTERFERER FREQUENCY

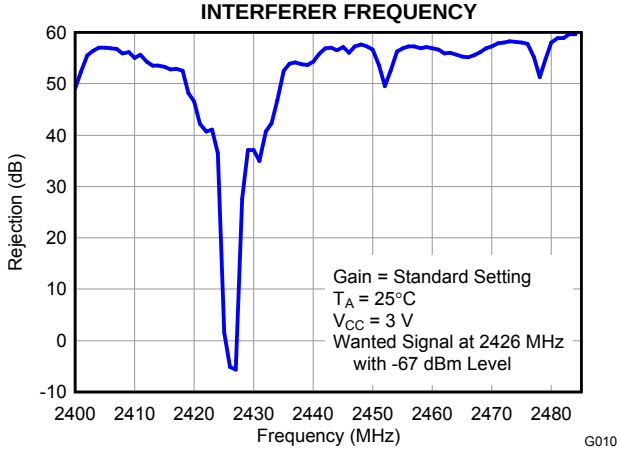

Figure 18.

TX POWER vs FREQUENCY

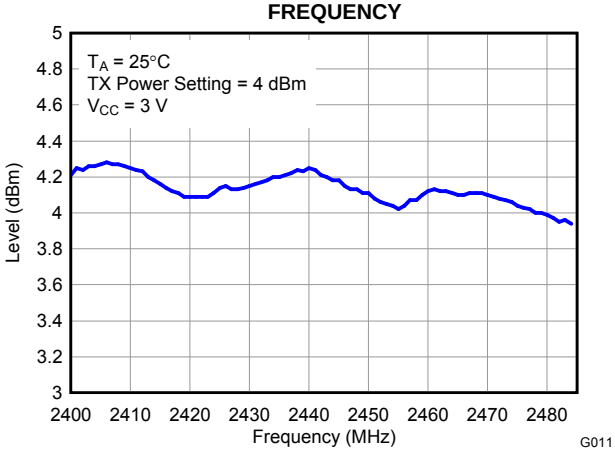

Figure 19.

Copyright © 2010–2013, Texas Instruments Incorporated

TYPICAL CHARACTERISTICS (continued)

Table 1. Output Power and Current Consumption(1)(2)

Typical Output Power (dBm)	Typical Current Consumption (mA)	Typical Current Consumption With TPS62730 (mA)
4	32	24.6
0	27	21
–6	24	18.5
–23	21	16.5

(1) Measured on Texas Instruments CC2540 EM reference design with T_A = 25°C, VDD = 3 V and f_c = 2440 MHz. See SWRU191 for recommended register settings
(2) Measured on Texas Instruments CC2540TPS62730 EM reference design with T_A = 25°C, VDD = 3 V and f_c = 2440 MHz. See SWRU191 for recommended register settings

TYPICAL CURRENT SAVINGS

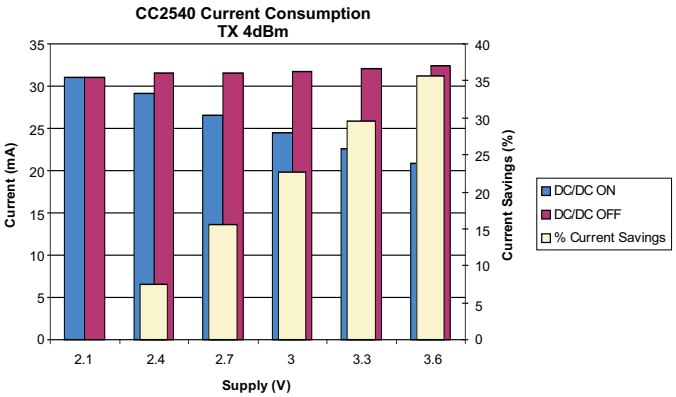

Figure 20. Current Savings in TX at Room Temperature

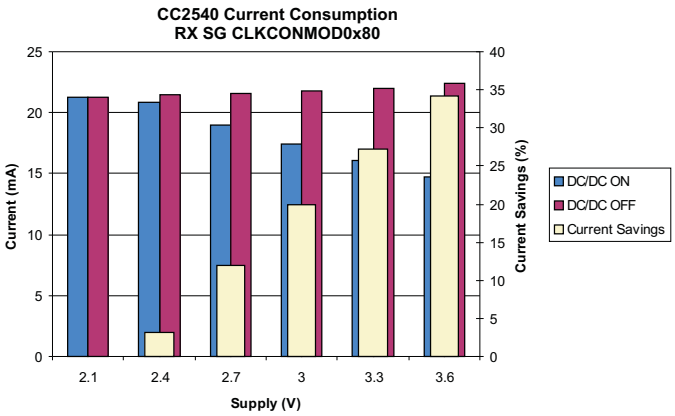

Figure 21. Current Savings in RX at Room Temperature

The application note (SWRA365) has information regarding the CC2540 and TPS62730 como board and the current savings that can be achieved using the como board.

APPLICATION INFORMATION

Few external components are required for the operation of the CC2540. A typical application circuit is shown in Figure 22.

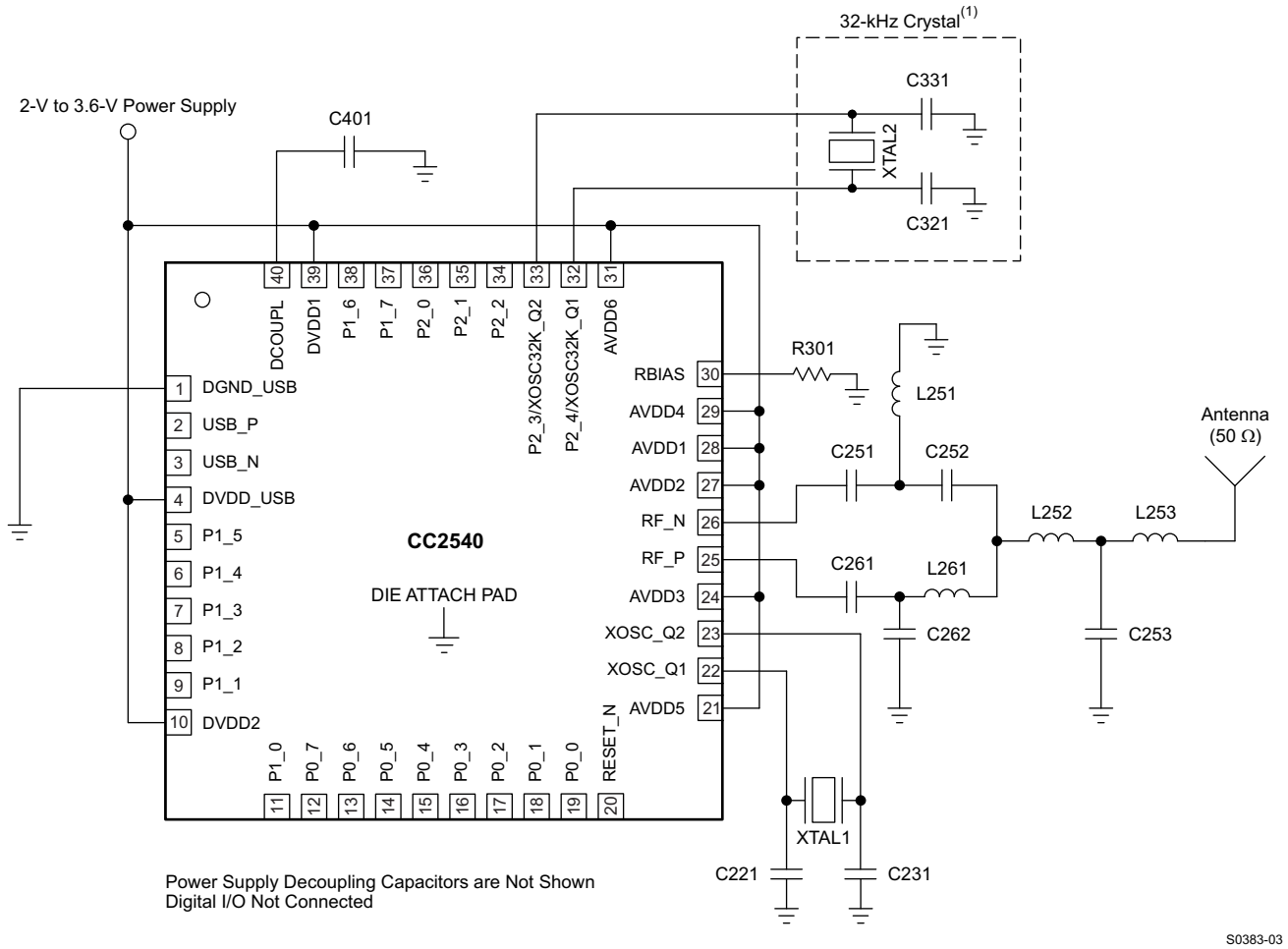

(1) 32-kHz crystal is mandatory when running the chip in low-power modes, except if the link layer is in the standby state (Vol. 6 Part B Section 1.1 in [1]).

NOTE: Different antenna alternatives will be provided as reference designs.

Figure 22. CC2540 Application Circuit

Table 2. Overview of External Components (Excluding Supply Decoupling Capacitors)

Component	Description	Value
C221	32-MHz xtal loading capacitor	12 pF
C231	32-MHz xtal loading capacitor	12 pF
C251	Part of the RF matching network	18 pF
C252	Part of the RF matching network	1 pF
C253	Part of the RF matching network	1 pF
C261	Part of the RF matching network	18 pF
C262	Part of the RF matching network	1 pF
C321	32-kHz xtal loading capacitor	15 pF
C331	32-kHz xtal loading capacitor	15 pF

Copyright © 2010–2013, Texas Instruments Incorporated

Table 2. Overview of External Components (Excluding Supply Decoupling Capacitors) (continued)

Component	Description	Value
C401	Decoupling capacitor for the internal digital regulator	1 µF
L251	Part of the RF matching network	2 nH
L252	Part of the RF matching network	1 nH
L253	Part of the RF matching network	3 nH
L261	Part of the RF matching network	2 nH
R301	Resistor used for internal biasing	56 kΩ

Input/Output Matching

When using an unbalanced antenna such as a monopole, a balun should be used to optimize performance. The balun can be implemented using low-cost discrete inductors and capacitors. The recommended balun shown consists of C262, L261, C252, and L252.

Crystal

An external 32-MHz crystal, XTAL1, with two loading capacitors (C221 and C231) is used for the 32-MHz crystal oscillator. See 32-MHz CRYSTAL OSCILLATOR for details. The load capacitance seen by the 32-MHz crystal is given by:

$$C_L = \frac{1}{\frac{1}{C_{221}} + \frac{1}{C_{231}}} + C_{parasitic} \tag{1}$$

XTAL2 is an optional 32.768-kHz crystal, with two loading capacitors (C321 and C331) used for the 32.768-kHz crystal oscillator. The 32.768-kHz crystal oscillator is used in applications where both very low sleep-current consumption and accurate wake-up times are needed. The load capacitance seen by the 32.768-kHz crystal is given by:

$$C_L = \frac{1}{\frac{1}{C_{321}} + \frac{1}{C_{331}}} + C_{parasitic} \tag{2}$$

A series resistor may be used to comply with the ESR requirement.

On-Chip 1.8-V Voltage Regulator Decoupling

The 1.8-V on-chip voltage regulator supplies the 1.8-V digital logic. This regulator requires a decoupling capacitor (C401) for stable operation.

Power-Supply Decoupling and Filtering

Proper power-supply decoupling must be used for optimum performance. The placement and size of the decoupling capacitors and the power supply filtering are very important to achieve the best performance in an application. TI provides a compact reference design that should be followed very closely.

References

1. *Bluetooth*® Core Technical Specification document, version 4.0
   http://www.bluetooth.com/SiteCollectionDocuments/Core_V40.zip
2. CC253x System-on-Chip Solution for 2.4-GHz IEEE 802.15.4 and ZigBee® Applications/CC2540 System-on-Chip Solution for 2.4-GHz *Bluetooth* low energy Applications (SWRU191)
3. Current Savings in CC254x Using the TPS62730 (SWRA365)

Additional Information

Texas Instruments offers a wide selection of cost-effective, low-power RF solutions for proprietary and standard-based wireless applications for use in industrial and consumer applications. Our selection includes RF transceivers, RF transmitters, RF front ends, and System-on-Chips as well as various software solutions for the sub-1- and 2.4-GHz frequency bands.

In addition, Texas Instruments provides a large selection of support collateral such as development tools, technical documentation, reference designs, application expertise, customer support, third-party and university programs.

The Low-Power RF E2E Online Community provides technical support forums, videos and blogs, and the chance to interact with fellow engineers from all over the world.

With a broad selection of product solutions, end application possibilities, and a range of technical support, Texas Instruments offers the broadest low-power RF portfolio. We make RF easy!

The following subsections point to where to find more information.

Texas Instruments Low-Power RF Web Site

- Forums, videos, and blogs
- RF design help
- E2E interaction

Join us today at www.ti.com/lprf-forum.

Texas Instruments Low-Power RF Developer Network

Texas Instruments has launched an extensive network of low-power RF development partners to help customers speed up their application development. The network consists of recommended companies, RF consultants, and independent design houses that provide a series of hardware module products and design services, including:

- RF circuit, low-power RF, and ZigBee® design services
- Low-power RF and ZigBee module solutions and development tools
- RF certification services and RF circuit manufacturing

Need help with modules, engineering services or development tools?

Search the Low-Power RF Developer Network tool to find a suitable partner.
www.ti.com/lprfnetwork

Low-Power RF eNewsletter

The Low-Power RF eNewsletter keeps the user up-to-date on new products, news releases, developers' news, and other news and events associated with low-power RF products from TI. The Low-Power RF eNewsletter articles include links to get more online information.

Sign up today on
www.ti.com/lprfnewsletter

Copyright © 2010–2013, Texas Instruments Incorporated

REVISION HISTORY

Changes from Revision Original (October 2010) to Revision A	Page
• Changed several items in Features list	1
• Changed upper limit of storage temperature range	4
• Changed ESD rating for charged-device model	4
• Changed adjacent-channel rejection from 5 dB to –5 dB	5

Changes from Revision A (May 2011) to Revision B	Page
• Added the TPS62730 Compatible Features List	1
• Added the CC2540 WITH TPS62730 Applications	2
• Added CURRENT CONSUMPTION WITH TPS62730 characteristics	6
• Changed Table 1	23
• Added the TYPICAL CURRENT SAVINGS section	23

Changes from Revision B (July 2011) to Revision C	Page
• Changed on page 2, under CC2540...item 2 from Application Run Time to Battery Lifetime	2
• Corrected block diagram	3
• In the OP-AMP CHARACTERISTICS table, changed several values in the TYP column	9

Changes from Revision C (November 2011) to Revision D	Page
• Changed the Temperature coefficient Unit value From: mV/°C To: / 0.1°C	8
• Changed Figure 22 text From: Optional 32-kHz Crystal To: 32-kHz Crystal	24

Changes from Revision D (August 2012) to Revision E	Page
• Changed the "Internal reference voltage" TYP value From 1.15 V To: 1.24 V	11

Changes from Revision E (November 2012) to Revision F	Page
• Changed the RF TRANSMIT SECTION, Output power TYP value From: –20 To: –23	6
• Changed the RF TRANSMIT SECTION, Programmable output power range TYP value From: 24 To: 27	6

PACKAGING INFORMATION

Orderable part number	Status (1)	Material type (2)	Package | Pins	Package qty | Carrier	RoHS (3)	Lead finish/ Ball material (4)	MSL rating/ Peak reflow (5)	Op temp (°C)	Part marking (6)
CC2540F128RHAR	Active	Production	VQFN (RHA) | 40	2500 | LARGE T&R	Yes	NIPDAU | NIPDAUAG	Level-3-260C-168 HR	-40 to 85	CC2540 F128
CC2540F128RHAR.A	Active	Production	VQFN (RHA) | 40	2500 | LARGE T&R	Yes	NIPDAU	Level-3-260C-168 HR	-40 to 85	CC2540 F128
CC2540F128RHAR.B	Active	Production	VQFN (RHA) | 40	2500 | LARGE T&R	Yes	NIPDAU	Level-3-260C-168 HR	-40 to 85	CC2540 F128
CC2540F128RHAT	Active	Production	VQFN (RHA) | 40	250 | SMALL T&R	Yes	NIPDAU | NIPDAUAG	Level-3-260C-168 HR	-40 to 85	CC2540 F128
CC2540F128RHAT.A	Active	Production	VQFN (RHA) | 40	250 | SMALL T&R	Yes	NIPDAU	Level-3-260C-168 HR	-40 to 85	CC2540 F128
CC2540F128RHAT.B	Active	Production	VQFN (RHA) | 40	250 | SMALL T&R	Yes	NIPDAU	Level-3-260C-168 HR	-40 to 85	CC2540 F128
CC2540F256RHAR	Active	Production	VQFN (RHA) | 40	2500 | LARGE T&R	Yes	NIPDAU | NIPDAUAG	Level-3-260C-168 HR	-40 to 85	CC2540 F256
CC2540F256RHAR.A	Active	Production	VQFN (RHA) | 40	2500 | LARGE T&R	Yes	NIPDAU	Level-3-260C-168 HR	-40 to 85	CC2540 F256
CC2540F256RHAR.B	Active	Production	VQFN (RHA) | 40	2500 | LARGE T&R	Yes	NIPDAU	Level-3-260C-168 HR	-40 to 85	CC2540 F256
CC2540F256RHAT	Active	Production	VQFN (RHA) | 40	250 | SMALL T&R	Yes	NIPDAU | NIPDAUAG	Level-3-260C-168 HR	-40 to 85	CC2540 F256
CC2540F256RHAT.A	Active	Production	VQFN (RHA) | 40	250 | SMALL T&R	Yes	NIPDAU	Level-3-260C-168 HR	-40 to 85	CC2540 F256
CC2540F256RHAT.B	Active	Production	VQFN (RHA) | 40	250 | SMALL T&R	Yes	NIPDAU	Level-3-260C-168 HR	-40 to 85	CC2540 F256

(1) **Status:** For more details on status, see our product life cycle.

(2) **Material type:** When designated, preproduction parts are prototypes/experimental devices, and are not yet approved or released for full production. Testing and final process, including without limitation quality assurance, reliability performance testing, and/or process qualification, may not yet be complete, and this item is subject to further changes or possible discontinuation. If available for ordering, purchases will be subject to an additional waiver at checkout, and are intended for early internal evaluation purposes only. These items are sold without warranties of any kind.

(3) **RoHS values:** Yes, No, RoHS Exempt. See the TI RoHS Statement for additional information and value definition.

(4) **Lead finish/Ball material:** Parts may have multiple material finish options. Finish options are separated by a vertical ruled line. Lead finish/Ball material values may wrap to two lines if the finish value exceeds the maximum column width.

(5) **MSL rating/Peak reflow:** The moisture sensitivity level ratings and peak solder (reflow) temperatures. In the event that a part has multiple moisture sensitivity ratings, only the lowest level per JEDEC standards is shown. Refer to the shipping label for the actual reflow temperature that will be used to mount the part to the printed circuit board.

(6) **Part marking:** There may be an additional marking, which relates to the logo, the lot trace code information, or the environmental category of the part.

Multiple part markings will be inside parentheses. Only one part marking contained in parentheses and separated by a "~" will appear on a part. If a line is indented then it is a continuation of the previous line and the two combined represent the entire part marking for that device.

Important Information and Disclaimer: The information provided on this page represents TI's knowledge and belief as of the date that it is provided. TI bases its knowledge and belief on information provided by third parties, and makes no representation or warranty as to the accuracy of such information. Efforts are underway to better integrate information from third parties. TI has taken and continues to take reasonable steps to provide representative and accurate information but may not have conducted destructive testing or chemical analysis on incoming materials and chemicals. TI and TI suppliers consider certain information to be proprietary, and thus CAS numbers and other limited information may not be available for release.

In no event shall TI's liability arising out of such information exceed the total purchase price of the TI part(s) at issue in this document sold by TI to Customer on an annual basis.

TRAY

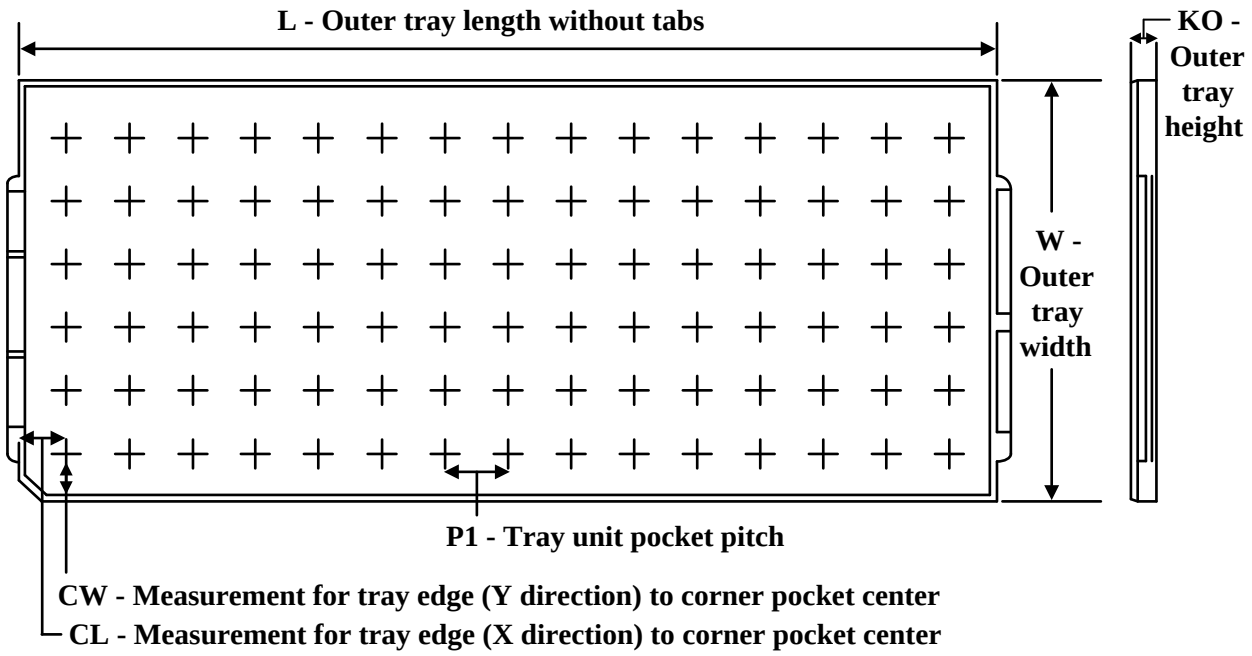

Chamfer on Tray corner indicates Pin 1 orientation of packed units.

*All dimensions are nominal

Device	Package Name	Package Type	Pins	SPQ	Unit array matrix	Max temperature (°C)	L (mm)	W (mm)	K0 (µm)	P1 (mm)	CL (mm)	CW (mm)
CC2540F128RHAR	RHA	VQFN	40	2500	35 X 14	150	315	135.9	7620	8.8	7.9	8.15
CC2540F128RHAR	RHA	VQFN	40	2500	35 X 14	150	315	135.9	7620	8.8	7.9	8.15
CC2540F128RHAR.A	RHA	VQFN	40	2500	35 X 14	150	315	135.9	7620	8.8	7.9	8.15
CC2540F128RHAR.A	RHA	VQFN	40	2500	35 X 14	150	315	135.9	7620	8.8	7.9	8.15
CC2540F128RHAR.B	RHA	VQFN	40	2500	35 X 14	150	315	135.9	7620	8.8	7.9	8.15
CC2540F128RHAR.B	RHA	VQFN	40	2500	35 X 14	150	315	135.9	7620	8.8	7.9	8.15
CC2540F128RHAT	RHA	VQFN	40	250	35 X 14	150	315	135.9	7620	8.8	7.9	8.15
CC2540F128RHAT	RHA	VQFN	40	250	35 X 14	150	315	135.9	7620	8.8	7.9	8.15
CC2540F128RHAT.A	RHA	VQFN	40	250	35 X 14	150	315	135.9	7620	8.8	7.9	8.15
CC2540F128RHAT.A	RHA	VQFN	40	250	35 X 14	150	315	135.9	7620	8.8	7.9	8.15
CC2540F128RHAT.B	RHA	VQFN	40	250	35 X 14	150	315	135.9	7620	8.8	7.9	8.15
CC2540F128RHAT.B	RHA	VQFN	40	250	35 X 14	150	315	135.9	7620	8.8	7.9	8.15
CC2540F256RHAR	RHA	VQFN	40	2500	35 X 14	150	315	135.9	7620	8.8	7.9	8.15
CC2540F256RHAR.A	RHA	VQFN	40	2500	35 X 14	150	315	135.9	7620	8.8	7.9	8.15
CC2540F256RHAR.B	RHA	VQFN	40	2500	35 X 14	150	315	135.9	7620	8.8	7.9	8.15
CC2540F256RHAT	RHA	VQFN	40	250	35 X 14	150	315	135.9	7620	8.8	7.9	8.15
CC2540F256RHAT	RHA	VQFN	40	250	35 X 14	150	315	135.9	7620	8.8	7.9	8.15

Device	Package Name	Package Type	Pins	SPQ	Unit array matrix	Max temperature (°C)	L (mm)	W (mm)	K0 (µm)	P1 (mm)	CL (mm)	CW (mm)
CC2540F256RHAT.A	RHA	VQFN	40	250	35 X 14	150	315	135.9	7620	8.8	7.9	8.15
CC2540F256RHAT.A	RHA	VQFN	40	250	35 X 14	150	315	135.9	7620	8.8	7.9	8.15
CC2540F256RHAT.B	RHA	VQFN	40	250	35 X 14	150	315	135.9	7620	8.8	7.9	8.15
CC2540F256RHAT.B	RHA	VQFN	40	250	35 X 14	150	315	135.9	7620	8.8	7.9	8.15

GENERIC PACKAGE VIEW

RHA 40

VQFN - 1 mm max height

6 x 6, 0.5 mm pitch

PLASTIC QUAD FLATPACK - NO LEAD

This image is a representation of the package family, actual package may vary.
Refer to the product data sheet for package details.

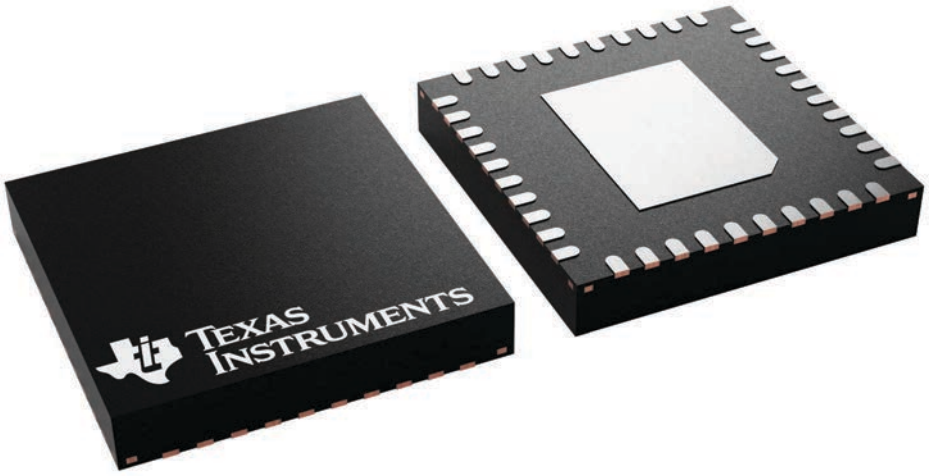

4225870/A

RHA0040H

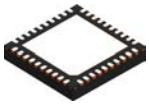

PACKAGE OUTLINE

VQFN - 1 mm max height

PLASTIC QUAD FLATPACK - NO LEAD

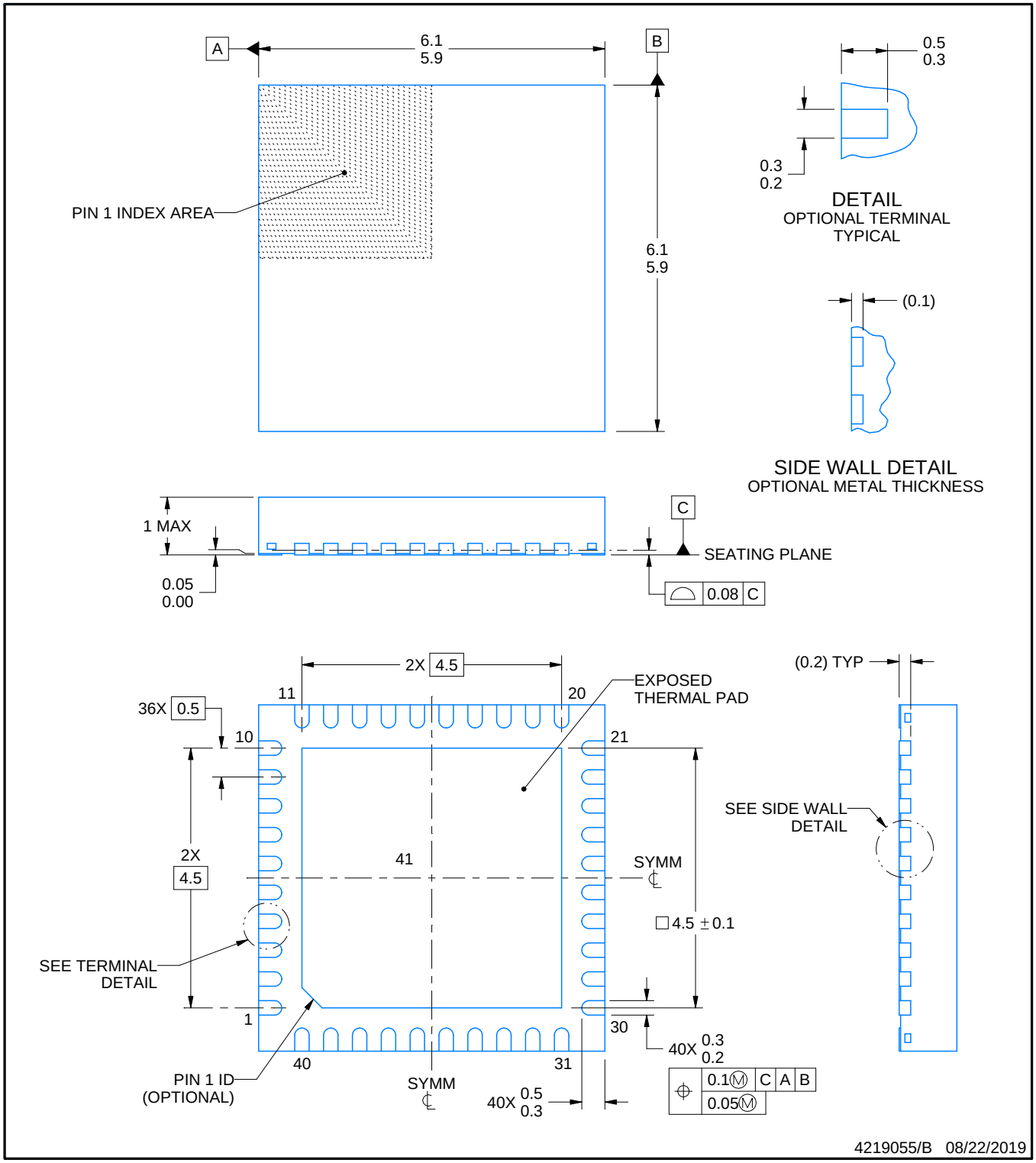

NOTES:

1. All linear dimensions are in millimeters. Any dimensions in parenthesis are for reference only. Dimensioning and tolerancing per ASME Y14.5M.
2. This drawing is subject to change without notice.
3. The package thermal pad must be soldered to the printed circuit board for thermal and mechanical performance.

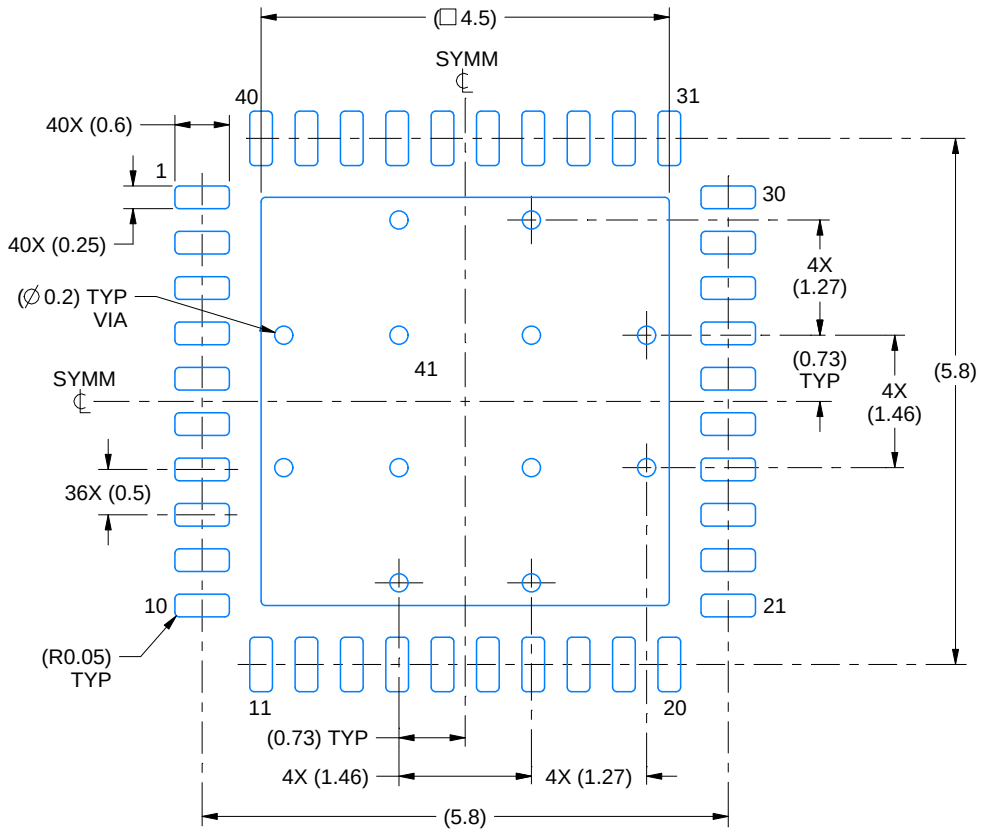

LAND PATTERN EXAMPLE
EXPOSED METAL SHOWN
SCALE:12X

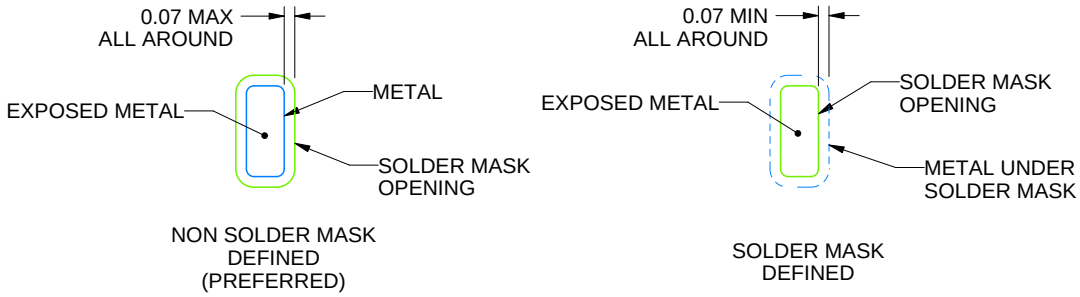

SOLDER MASK DETAILS

4219055/B 08/22/2019

NOTES: (continued)

4. This package is designed to be soldered to a thermal pad on the board. For more information, see Texas Instruments literature number SLUA271 (www.ti.com/lit/slua271).
5. Vias are optional depending on application, refer to device data sheet. If any vias are implemented, refer to their locations shown on this view. It is recommended that vias under paste be filled, plugged or tented.

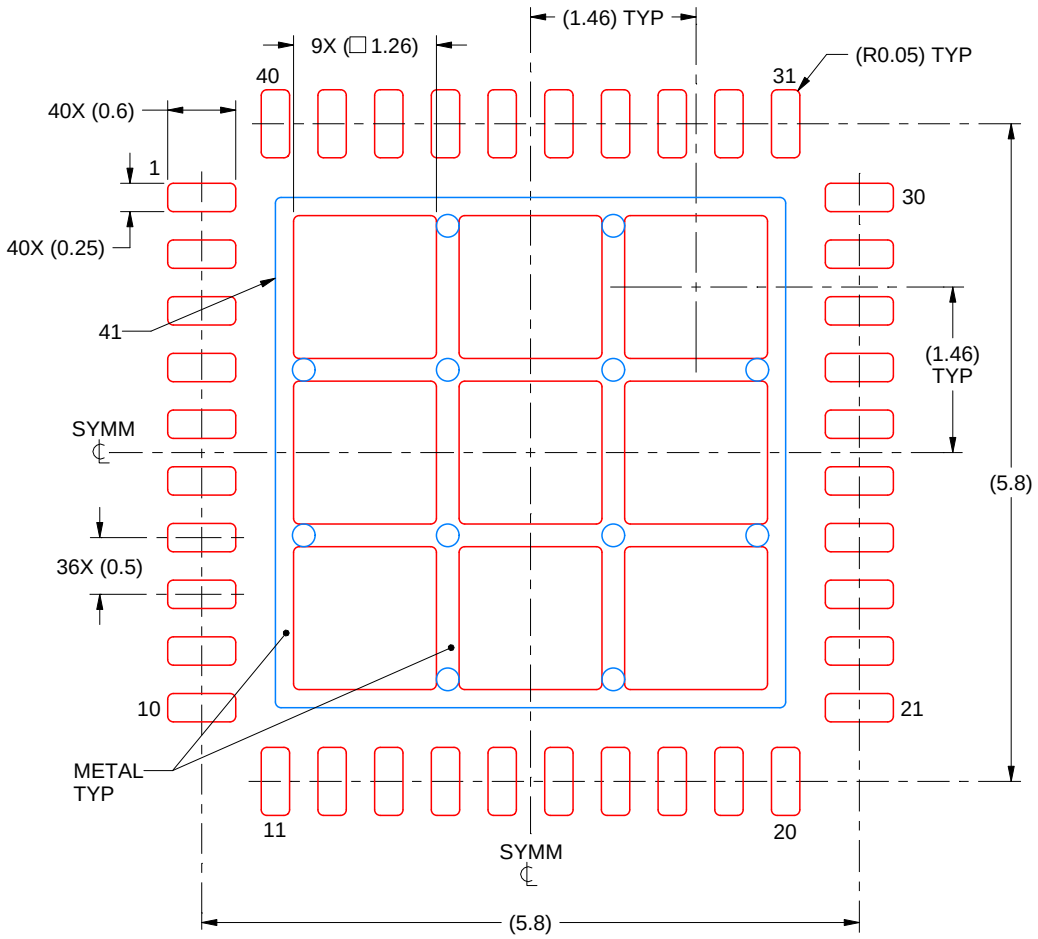

SOLDER PASTE EXAMPLE
BASED ON 0.125 mm THICK STENCIL

EXPOSED PAD 41:
70% PRINTED SOLDER COVERAGE BY AREA
SCALE:15X

4219055/B 08/22/2019

NOTES: (continued)

6. Laser cutting apertures with trapezoidal walls and rounded corners may offer better paste release. IPC-7525 may have alternate design recommendations.

IMPORTANT NOTICE AND DISCLAIMER

TI PROVIDES TECHNICAL AND RELIABILITY DATA (INCLUDING DATASHEETS), DESIGN RESOURCES (INCLUDING REFERENCE DESIGNS), APPLICATION OR OTHER DESIGN ADVICE, WEB TOOLS, SAFETY INFORMATION, AND OTHER RESOURCES “AS IS” AND WITH ALL FAULTS, AND DISCLAIMS ALL WARRANTIES, EXPRESS AND IMPLIED, INCLUDING WITHOUT LIMITATION ANY IMPLIED WARRANTIES OF MERCHANTABILITY, FITNESS FOR A PARTICULAR PURPOSE OR NON-INFRINGEMENT OF THIRD PARTY INTELLECTUAL PROPERTY RIGHTS.

These resources are intended for skilled developers designing with TI products. You are solely responsible for (1) selecting the appropriate TI products for your application, (2) designing, validating and testing your application, and (3) ensuring your application meets applicable standards, and any other safety, security, regulatory or other requirements.

These resources are subject to change without notice. TI grants you permission to use these resources only for development of an application that uses the TI products described in the resource. Other reproduction and display of these resources is prohibited. No license is granted to any other TI intellectual property right or to any third party intellectual property right. TI disclaims responsibility for, and you fully indemnify TI and its representatives against any claims, damages, costs, losses, and liabilities arising out of your use of these resources.

TI’s products are provided subject to TI’s Terms of Sale, TI’s General Quality Guidelines, or other applicable terms available either on ti.com or provided in conjunction with such TI products. TI’s provision of these resources does not expand or otherwise alter TI’s applicable warranties or warranty disclaimers for TI products. Unless TI explicitly designates a product as custom or customer-specified, TI products are standard, catalog, general purpose devices.

TI objects to and rejects any additional or different terms you may propose.

Copyright © 2026, Texas Instruments Incorporated

Last updated 10/2025