CC1402P SimpleLink™ General Purpose FSK Transceiver with Integrated High Power Amplifier

1 Features

RF performance and analog features

- High-performance, software-configurable transceiver with support for IEEE 802.15.4
- Wide RF frequency coverage from 196MHz to 1149MHz
- Supported modulation formats:
  - SUN FSK, 2-(G)FSK, 4-(G) FSK, MSK and OOK
- High linearity PA:
  - Up to +22dBm output power with FSK
- High efficiency PA:
  - +16dBm output power in differential mode
  - +14dBm output power in single-ended mode
  - Supports FSK and OOK
- Receiver sensitivity (w/uLNA enabled):
  - -122dBm at 1.25kbit/s for CC140x Long Range Mode
  - -107dBm at 100kbps SUN FSK #2b, no FEC
- Current consumption:
  - 8.4mA RX in SUN FSK, high performance
  - 6.9mA RX low power mode
  - TX (high linearity PA): 134mA at +22dBm
  - TX (high efficiency PA): 33mA at +16dBm

Digital features

- Software configurable modem and in-field upgradable radio transceiver through a secure serial bootloader (SSBL)
- Includes IEEE and TI proprietary unique IDs
- Factory-calibrated TX power and RSSI measurement
- Sniff mode and dual sync word capabilities
- WaveMatch for improved sync detect performance

Easy-to-use software API

- Device configuration and information
- Action commands and status commands and data transfer commands
- Packet streaming and repeat RX/TX supported with stream store and flush commands

RoHS-compliant package

- 5mm × 5mm RKP VQFN

Peripherals

- 1 × SPI, 8 × GPIO, RF front-end control, AES 128-bit hardware accelerator

Voltage supply

- Voltage range: 1.71V to 3.8V
- Built-in DC/DC converter

Regulations—suitable for systems targeting

- ETSI EN 300 220 receiver category 1, 1.5 and 2
- EN 303 131, EN 303 204
- FCC CFR47 part 15
- ARIB STD-T108

Supported protocols and standards

- Wi-SUN®, IEEE 802.15.4, Wireless M-bus, OMS v5.0.1 (TX burst mode), IPv6-enabled smart objects (6LoWPAN), RF proprietary systems, SimpleLink™ TI 15.4-stack

Development *Tools and Software*

- CC1402P BoosterPack™ development kit
- SimpleLink™ CC140x software host driver plug-in
- SmartRF™ Studio 8 for simple radio configuration

2 Applications

- Building automation
  - Building security systems : Automated door & gate, Building security gateway, Door & window sensor, Electronic smart lock, Garage door system, Glass break detector, IP network camera; Occupancy detection (people tracking, people counting)
  - HVAC system : Air conditioner indoor unit, Air conditioner outdoor unit, HVAC controller, HVAC fluid leak detector, HVAC gateway, HVAC motor control, HVAC valve & actuator control, Thermostat, Wireless environmental sensor
  - Fire safety system : Fire alarm control panel (FACP), Gas detector, Smoke & heat detector
  - Lighting : Area & landscape lighting, Exit & emergency lighting, Lighting sensor, Residential lighting, Smart plug, Wireless control
- Energy infrastructure
  - Energy storage systems : Wireless Battery Management System, Portable power station,
  - Smart meters : Electricity meter, Gas meter, Heat meter, Water meter, Data concentrators
  - Solar energy : solar energy, wireless communications
  - Smart circuit breakers & electrical panels : Smart electrical panel, Solid state circuit breaker (SSCB)
- Industrial automation

ADVANCE INFORMATION

An IMPORTANT NOTICE at the end of this data sheet addresses availability, warranty, changes, use in safety-critical applications, intellectual property matters and other important disclaimers. ADVANCE INFORMATION for preproduction products; subject to change without notice.

  - Field transmitter & sensor : Flow transmitter, Position sensor, Level transmitter, Pressure transmitter, Temperature transmitter,
- Medical & healthcare
  - Hospital patient care : Electrocardiogram (ECG), Electronic bed & chair, Multiparameter patient monitor
- Robotics :
  - Home service robot : Robotic lawn mower, Vacuum robot
  - Humanoid robot : Humanoid robot position sensor, Humanoid robot sensor module

3 Description

The SimpleLink™ CC1402P is a high-performance Sub-1GHz wireless transceiver supporting SUN FSK based on IEEE 802.15.4 as well as a wide variety of proprietary physical layers. The flexible software-defined radio architecture enables easy integration into legacy wireless systems. CC1402P is targeting Wi-SUN, 6LoWPAN and proprietary systems. The highlighted features of this device include:

- Flexible Sub-1GHz radio supporting wide RF frequency coverage
- Supports a variety of protocol stacks in the SimpleLink™ software development kit (SDK), including Wi-SUN®, SimpleLink™ 15.4-stack, and proprietary solutions
- Maximum transmit power of +22dBm for constant envelope signals like FSK and O-QPSK.
- Low power solution enabling battery-operated devices
- Dedicated software-defined radio controller providing flexible low-power RF transceiver capability to support multiple physical layers and RF standards
- Flexible GPIO manager enabling support for control of external Front-End Modules (FEMs)

TI offers drivers within the SimpleLink™ SDK plugin, including a driver for firmware updates. This enables a faster path from design to production. For more information on TI's Sub-1GHz solutions, visit www.ti.com/connectivity.

Device Information

PART NUMBER	PACKAGE(1)	PACKAGE SIZE (NOM)
CC1402PT1RKP	RKP (VQFN40)	5.0mm × 5.0mm
XCC1402PT1RKP	RKP (VQFN40)	5.0mm × 5.0mm

(1) For more information, see the *Mechanical, Packaging, and Orderable* addendum.

ADVANCE INFORMATION

Copyright © 2026 Texas Instruments Incorporated

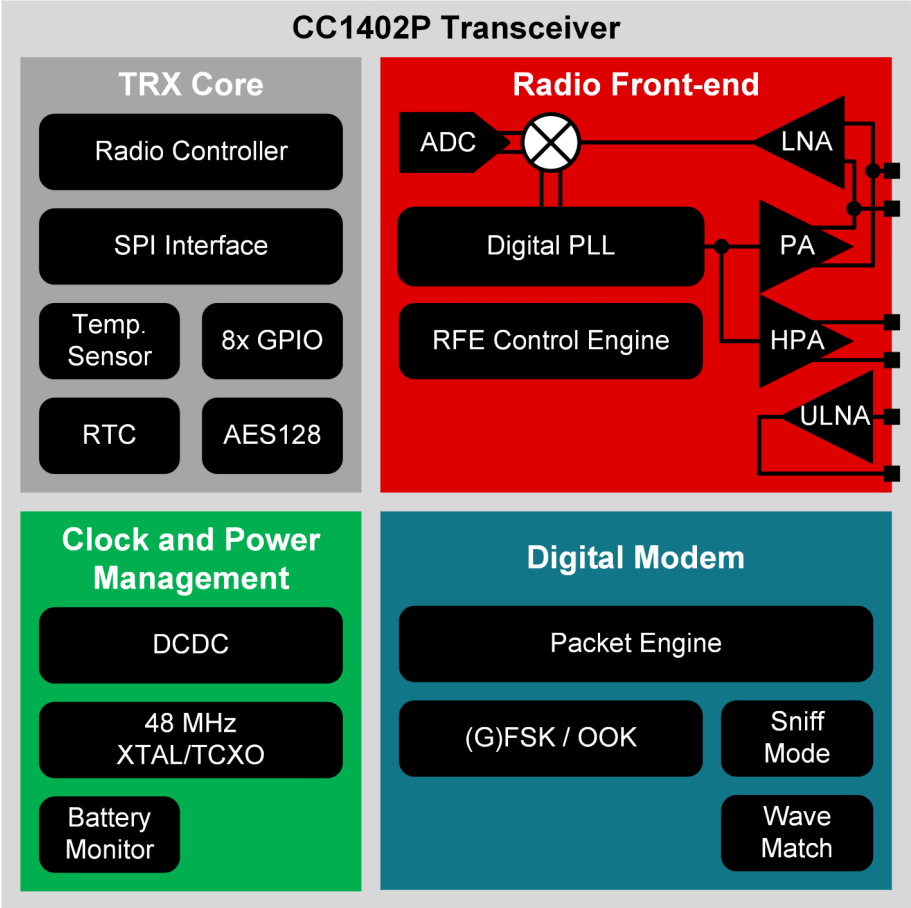

CC1402P Block Diagram

ADVANCE INFORMATION

ADVANCE INFORMATION

Table of Contents

1 Features....1
2 Applications....1
3 Description....2
4 Device Comparison....4
5 Pin Configuration and Functions....5
6 Specifications....7
6.1 Absolute Maximum Ratings....7
6.2 ESD Ratings....7
6.3 Recommended Operating Conditions....7
6.4 Power Consumption (Power Modes)....8
6.5 Power Consumption (Radio Modes)....9
6.6 RF Frequency Bands....9
6.7 Reset Timing....9
6.8 Temperature Sensor....9
6.9 Battery Monitor....9
6.10 GPIO DC Characteristics....9
6.11 SPI Characteristics....10
6.12 DC/DC....10
6.13 48MHz Crystal Oscillator (HFXT)....10
6.14 48MHz Clock Input (TCXO)....10
6.15 32kHz RC Oscillator (LFOSC)....10
6.16 782MHz - 957MHz Receive (RX)....11
6.17 782 MHz - 957 MHz Transmit (TX)....21
6.18 RF PLL Phase Noise and Spurious....23
7 Detailed Description....25
7.1 Radio (RF Core)....25
7.2 Memory....26
7.3 Battery and Temperature Monitor....26
7.4 Proprietary Radio Form....27
7.5 Power Management....28
8 Application, Implementation, and Layout....29
8.1 Reference Designs....29
9 Device and Documentation Support....32
9.1 Device Nomenclature....32
9.2 Tools and Software....32
9.3 Receiving Notification of Documentation Updates....33
9.4 Documentation Support....33
9.5 Trademarks....33
9.6 Electrostatic Discharge Caution....34
9.7 Export Control Notice....34
9.8 Glossary....34
10 Revision History....34
11 Mechanical, Packaging, and Orderable Information....34
11.1 Packaging Information....34

4 Device Comparison

Table 4-1. Device Family Overview

DEVICE	RADIO SUPPORT	MODEM CAPABILITIES	GPIO	PACKAGE SIZE
CC1407P	Sub-1GHz	SUN OFDM, OFDM-Long Range (OFDM-LR), SUN FSK, SUN O-QPSK, 2-(G)FSK, 4-(G) FSK, MSK, O-QPSK and OOK	8	RKP (VQFN40) (5mm × 5mm)
CC1404P	Sub-1GHz	SUN FSK, SUN O-QPSK, 2-(G)FSK, 4-(G) FSK, MSK, O-QPSK and OOK	8	RKP (VQFN40) (5mm × 5mm)
CC1402P	Sub-1GHz	SUN FSK, 2-(G)FSK, 4-(G) FSK and MSK	8	RKP (VQFN40) (5mm × 5mm)

Copyright © 2026 Texas Instruments Incorporated

5 Pin Configuration and Functions

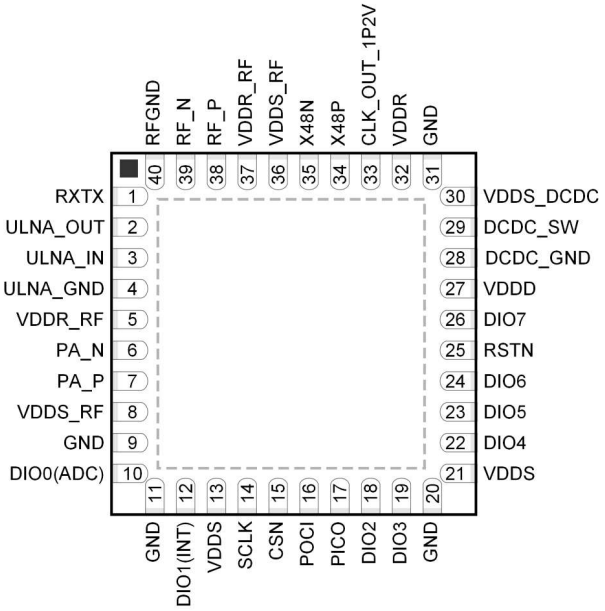

Figure 5-1. RKP (5mm × 5mm) Pinout, 0.4mm Pitch (Top View)

Table 5-1. Pin Functions

PIN		I/O	TYPE	DESCRIPTION
NAME	NO.			
RF_N	39	I/O	RF	Analog Differential TX/RX Port
RF_P	38	I/O	RF	Analog Differential TX/RX Port
PA_P	7	O	RF	Analog Differential TX output
PA_N	6	O	RF	Analog Differential TX output
ULNA_IN	3	I	RF	Analog Single ended port
ULNA_OUT	2	O	RF	Analog Single ended port
RXTX	1	O	RF	Optional bias pin for the RF LNA
DIO0 (ADC)	10	I/O	Digital	Digital GPIO
DIO1 (INT)	12	I/O	Digital	Digital GPIO (SPI Interrupt signal)
DIO2	18	I/O	Digital	Digital GPIO
DIO3	19	I/O	Digital	Digital GPIO
DIO4	22	I/O	Digital	Digital GPIO
DIO5	23	I/O	Digital	Digital GPIO
DIO6	24	I/O	Digital	Digital GPIO
DIO7	26	I/O	Digital	Digital GPIO
CSN	15	I	Digital	SPI active-low chip select
SCLK	14	I	Digital	SPI clock
PICO	17	I	Digital	SPI data in
POCI	16	O	Digital	SPI data out
NC	33	—	—	No Connect

ADVANCE INFORMATION

Copyright © 2026 Texas Instruments Incorporated

ADVANCE INFORMATION

Table 5-1. Pin Functions (continued)

PIN		I/O	TYPE	DESCRIPTION
NAME	NO.			
EGP	—	—	GND	Ground – exposed ground pad
RSTN	25	I	Digital	Reset, active low. No internal pullup resistor
DCDC_SW	29	—	Power	Output from internal DC/DC converter
VDDR	32	—	Power	Internal supply, must be powered from internal DC/DC or LDO
VDDS_RF	8, 36	—	Power	Must be connected to VDDS
VDDR_RF	5,37	—	Power	Internal supply, must be powered from internal DC/DC or LDO
VDDD	27	—	Power	For decoupling of internal supply
VDDS	13, 21	—	Power	Main device supply
VDDS_DCDC	30	—	Power	Supply for DC/DC converter
X48P	34	—	Analog	48MHz crystal oscillator pin P
X48N	35	—	Analog	48MHz crystal oscillator pin N
ULNA_GND	4	—	Power	ULNA Ground
DCDC_GND	28	—	Power	DCDC Ground
RFGND	40	—	Power	RF Ground
GND	9,11,20,31	—	Power	Ground

Copyright © 2026 Texas Instruments Incorporated

6 Specifications

6.1 Absolute Maximum Ratings

Over operating free-air temperature range (unless otherwise noted)[1] [2]

PARAMETER	TEST CONDITIONS	MIN	TYP	MAX	UNIT
VDDS[3]	Supply voltage	–0.3		3.9	V
Input voltage	Voltage on any digital pin[4]	–0.3		VDDS + 0.3, max 3.9	V
Input RF level	Input level, RF pins (RF_N, RF_P)			10	dBm
Input RF level	Input level, ULNA pins			0	dBm
T_{stg}	Storage temperature	–40		125	°C

(1) Operation outside the Absolute Maximum Ratings may cause permanent device damage. Absolute Maximum Ratings do not imply functional operation of the device at these or any other conditions beyond those listed under Recommended Operating Conditions. If outside the Recommended Operating Conditions but within the Absolute Maximum Ratings, the device may not be fully functional, and this may affect device reliability, functionality, performance, and shorten the device lifetime.
(2) All voltage values are with respect to ground, unless otherwise noted.
(3) VDDS_DCDC must be at the same potential as VDDS.
(4) Including analog capable DIOs.

6.2 ESD Ratings

PARAMETER	PARAMETER	TEST CONDITIONS	VALUE	UNIT
V_{ESD}	Human body model (HBM), per ANSI/ESDA/JEDEC JS-001[1]	All pins, except ULNA_OUT	±2000	V
	Human body model (HBM), per ANSI/ESDA/JEDEC JS-001[1]	ULNA_OUT	±1500	V
	Charged device model (CDM), per ANSI/ESDA/JEDEC JS-002[2]	All pins	±500	V

(1) JEDEC document JEP155 states that 500V HBM allows safe manufacturing with a standard ESD control process
(2) JEDEC document JEP157 states that 250V CDM allows safe manufacturing with a standard ESD control process

6.3 Recommended Operating Conditions

Over operating free-air temperature range (unless otherwise noted)

PARAMETER	TEST CONDITIONS	MIN	MAX	UNIT
Operating ambient temperature[1]	Operating ambient temperature[1]	-40	105	°C
Operating supply voltage (VDDS)		1.71	3.8	V
Rising supply voltage slew rate		0	100	mV/µs
Falling supply voltage slew rate[2]		0	1	mV/µs

(1) Operation at or near maximum operating temperature for extended durations will result in a reduction in lifetime.
(2) For small coin-cell batteries, with high worst-case end-of-life equivalent source resistance, a 10µF VDDS input capacitor must be used to ensure compliance with this slew rate.

ADVANCE INFORMATION

ADVANCE INFORMATION

6.4 Power Consumption (Power Modes)

When measured on the BP-CC1402P-8-FE reference design with T_c = 25°C, V_{DDS} = 3.6V. All measurements are performed at the antenna input with a combined RX and TX path and through an RF switch as part of the reference design.
All measurements are performed conducted. All measurements are using 250 byte PSDU < 10% PER unless otherwise noted.

PARAMETER		TEST CONDITIONS	MIN	TYP	MAX	UNIT
Core Current Consumption with DCDC						
I_{core}	Idle with XOSC			1.6		mA
I_{core}	Standby			0.8		µA
Core Current Consumption with GLDO						
I_{core}	Idle with XOSC			2.7		mA
I_{core}	Standby			1.3		µA
Reset, Shutdown Current Consumption						
I_{core}	Reset	Reset. RESET_N pin asserted or VDDS below power-on-reset threshold		165		nA
I_{core}	Shutdown	Shutdown. No clocks running, no retention, IO wakeup enabled. 30 sec measurement delay		165		nA

Copyright © 2026 Texas Instruments Incorporated

6.5 Power Consumption (Radio Modes)

When measured on the BP-CC1402P-8-FE reference design with T_c = 25 °C, V_{DDS} = 3.6 V with DCDC on unless otherwise noted. All measurements are performed at the antenna input with a combined RX and TX path.
All measurements are performed conducted.

PARAMETER	TEST CONDITIONS	MIN	TYP	MAX	UNIT
Radio receive current	915MHz RX current consumption FSK, low-power mode		6.9		mA
Radio transmit current	10dBm FSK output power setting, High Power PA supplied from VDDS, 915MHz		47		mA
Radio transmit current	22dBm FSK output power setting, High Power PA supplied from VDDS, 915MHz		134		mA
Radio receive current	915MHz RX current consumption FSK, ULNA, VDDS 3.6V		8.4		mA
Radio transmit current	14dBm FSK output power setting, single-ended mode, High Efficiency PA, 915MHz, 3.6V		22		mA

6.6 RF Frequency Bands

Over operating free-air temperature range (unless otherwise noted).

PARAMETER	TEST CONDITIONS	MIN	TYP	MAX	UNIT
Start and stop frequency range	RF divider 5	938		1149	MHz
Start and stop frequency range	RF divider 6	782		957	MHz
Start and stop frequency range	RF divider 8	587		718	MHz
Start and stop frequency range	RF divider 10	469		574	MHz
Start and stop frequency range	RF divider 12	391		479	MHz
Start and stop frequency range	RF divider 15	313		383	MHz
Start and stop frequency range	RF divider 16	294		359	MHz
Start and stop frequency range	RF divider 20	235		287	MHz
Start and stop frequency range	RF divider 24	196		239	MHz

6.7 Reset Timing

PARAMETER	TEST CONDITIONS	MIN	TYP	MAX	UNIT
RSTN low duration		1			µs

6.8 Temperature Sensor

Measured on a Texas Instruments reference design with T_c = 25°C, V_{DDS} = 3.6V, unless otherwise noted.

PARAMETER	TEST CONDITIONS	MIN	TYP	MAX	UNIT
Resolution			1.7		°C

6.9 Battery Monitor

Measured on a Texas Instruments reference design with T_c = 25°C, unless otherwise noted.

PARAMETER	TEST CONDITIONS	MIN	TYP	MAX	UNIT
Resolution	VDDS = 3.0V		22		mV
Range		1.7		3.8	V

6.10 GPIO DC Characteristics

Measured on a Texas Instruments reference design with Tc = 25°C, unless otherwise noted.

PARAMETER	TEST CONDITIONS	MIN	TYP	MAX	UNIT
Ambient operating temperature (T_A = 25 °C)					
VIH	Lowest GPIO input voltage reliably interpreted as a *High*	0.8*V_{DDS}			V
VIL	Highest GPIO input voltage reliably interpreted as a *Low*			0.2*V_{DDS}	V

ADVANCE INFORMATION

ADVANCE INFORMATION

6.11 SPI Characteristics

Over operating free-air temperature range (unless otherwise noted)

PARAMETERS		TEST CONDITIONS	MIN	TYP	MAX	UNIT
fSCLK 1/tsclk	SPI clock frequency	Secondary Mode 2.97V < VDDS < 3.8V			12	MHz
		Secondary Mode VDDS < 2.97V			8	
DC_{SCK}	SCK duty cycle		45%	50%	55%	

6.12 DC/DC

When Measured on the BP-CC1402P-8-FE reference design with T_c = 25°C, V_{DDS} = 3.6V.

PARAMETER	TEST CONDITIONS	MIN	TYP	MAX	UNIT
Inductor at VDDR pin			2.2		µH
Load capacitor at VDDR pin			10		µF

6.13 48MHz Crystal Oscillator (HFXT)

Measured on a Texas Instruments reference design with T_c = 25°C, V_{DDS} = 3.6V, unless otherwise noted.

PARAMETER		TEST CONDITIONS	MIN	TYP	MAX	UNIT
	Crystal frequency	Recommended BOM and layout		48		MHz
ESR	Equivalent series resistance 6 pF < C_L ≤ 9 pF			20	60	Ω
ESR	Equivalent series resistance 5 pF < C_L ≤ 6 pF				80	Ω
C_L	Crystal load capacitance[3]		5	7[2]	9	pF
Start-up time[1]	Until clock is qualified, 48MHz crystals only			200		µs

(1) Start-up time using the TI-provided power driver. Start-up time may increase if driver is not used.
(2) On-chip default connected capacitance including reference design parasitic capacitance.
(3) Adjustable load capacitance is integrated into the device. External load capacitors are required for systems targeting compliance with certain regulations.

6.14 48MHz Clock Input (TCXO)

Measured on a Texas Instruments reference design with T_c = 25°C, V_{DDS} = 3.6V, unless otherwise noted.[1]

PARAMETER	TEST CONDITIONS	MIN	TYP	MAX	UNIT
Clock frequency			48		MHz
TCXO clipped sine output, peak-to-peak	TCXO clipped sine output connected to pin X48P through series capacitor	0.6		1.58	V
TCXO with CMOS output, High input voltage	TCXO with CMOS output directly coupled to pin X48P	VDDR-0.3		VDDR	V
TCXO with CMOS output, Low input voltage		0		0.3	V

(1) Probing or otherwise stopping the TCXO while the DC/DC converter is enabled may cause permanent damage to the device.

6.15 32kHz RC Oscillator (LFOSC)

Measured on a Texas Instruments reference design with T_c = 25°C, V_{DDS} = 3.6V, unless otherwise noted.

	MIN	TYP	MAX	UNIT
Calibrated frequency		32.768 [1]		kHz

(1) When using LFOSC as source for the low frequency system clock (LFCLK), the accuracy of the LFCLK derived Real Time Clock (RTC) can be improved by measuring LFOSC relative to HFXT and compensating for the RTC tick speed.

Copyright © 2026 Texas Instruments Incorporated

6.16 782MHz - 957MHz Receive (RX)

When measured on the BP-CC1402P-8-FE reference design with T_c = 25°C, V_{DDS} = 3.6V.All measurements are performed at the antenna input with a combined RX and TX path and through an RF switch as part of the reference design. All measurements are performed conducted. All measurements are using 250 byte PSDU < 10% PER unless otherwise noted.

PARAMETER	TEST CONDITIONS	MIN	TYP	MAX	UNIT
General Parameters					
Digital channel filter programmable receive bandwidth	FSK mode	40		1700	kHz
Data rate	2FSK mode			1000	kbps
Data rate	4FSK mode			1200	kbps
Data rate step size (FSK modem)			1.5		bps
Spurious emissions 25MHz to 1GHz	868MHz Conducted emissions measured according to ETSI EN 300 220		< -57		dBm
Spurious emissions 1GHz to 13GHz			< -47		dBm
Prop FSK, 50kbps, ±25kHz deviation, 85kHz RX BW					
Sensitivity	50kbps, ±25kHz deviation, FSK, 868.3MHz, without uLNA, BER 0.1%		-108		dBm
Radiated sensitivity (Over the air measurement)	50kbps, ±25kHz deviation, FSK, 868.3MHz, with uLNA, with DCDC, BER 0.1%		-110		dBm
Sensitivity	50kbps, ±25kHz deviation, FSK, 868.3MHz, with uLNA, BER 0.1%		-112		dBm
Saturation limit	BER 0.1%		10		dBm
Selectivity, +100kHz	Wanted Level -94dBm, CW interferer, BER 0.1%		42		dB
Selectivity, -100kHz	Wanted Level -94dBm, CW interferer, BER 0.1%		40		dB
Selectivity, +200kHz	Wanted Level -94dBm, CW interferer, BER 0.1%Wanted Level -94dBm, CW interferer, BER 0.1%		50		dB
Selectivity, -200kHz	Wanted Level -94dBm, CW interferer, BER 0.1%		45		dB
Blocking, +1MHz	Wanted Level -94dBm, CW interferer, BER 0.1%		63		dB
Blocking, -1MHz	Wanted Level -94dBm, CW interferer, BER 0.1%		63		dB
Blocking, +2MHz	Wanted Level -94dBm, CW interferer, BER 0.1%		69		dB
Blocking, -2MHz	Wanted Level -94dBm, CW interferer, BER 0.1%		67		dB
Blocking, +5MHz	Wanted Level -94dBm, CW interferer, BER 0.1%		74		dB
Blocking, -5MHz	Wanted Level -94dBm, CW interferer, BER 0.1%		79		dB
Blocking, +10MHz	Wanted Level -94dBm, CW interferer, BER 0.1%		72		dB
Blocking, -10MHz	Wanted Level -94dBm, CW interferer, BER 0.1%		82		dB
Image rejection	Wanted Level -94dBm, CW interferer, BER 0.1%		49		dB
Image rejection	Wanted Level -94dBm, BER 0.1%		20		dB
RSSI accuracy	Starting from the sensitivity limit across the given dynamic range		±3		dB
Frequency error tolerance (ppm)	Measured at 10dB above sensitivity level. Negative offset		-35		ppm
Frequency error tolerance (ppm)	Measured at 10dB above sensitivity level. Positive offset		35		ppm
Low Power FSK 50kbps, ±25kHz deviation, 95kHz RX BW					
Sensitivity	BER = 0.1%, Low Power Mode FSK, 918.2MHz, (wo/uLNA)		-107		dBm
Saturation limit	BER = 0.1%, 918.2MHz, (wo/uLNA)		10		dBm
Selectivity, +200kHz	BER = 0.1%, 918.2MHz, (wo/uLNA), wanted level -91dBm, CW interferer		45		dB
Selectivity, -200kHz	BER = 0.1%, 918.2MHz, (wo/uLNA), wanted level -91dBm, CW interferer		42		dB
Blocking, +2MHz	BER = 0.1%, 918.2MHz, (wo/uLNA), wanted level -91dBm, CW interferer		63		dB
Blocking, -2MHz	BER = 0.1%, 918.2MHz, (wo/uLNA), wanted level -91dBm, CW interferer		63		dB
Blocking, +10MHz	BER = 0.1%, 918.2MHz, (wo/uLNA), wanted level -91dBm, CW interferer		67		dB
Blocking, -10MHz	BER = 0.1%, 918.2MHz, (wo/uLNA), wanted level -91dBm, CW interferer		73		dB
Image rejection	BER = 0.1%, 918.2MHz, (wo/uLNA), wanted level -91dBm		37		dB
RSSI dynamic range	Starting from the sensitivity limit		95		dB
RSSI accuracy	Starting from the sensitivity limit across the given dynamic range		±3		dB
Frequency error tolerance (ppm)	Measured at 10dB above sensitivity level. Negative offset		-40		ppm
Frequency error tolerance (ppm)	Measured at 10dB above sensitivity level. Positive offset		40		ppm
Symbol rate error tolerance (ppm)	Measured at 10dB above sensitivity level. Negative offset		-3000		ppm

ADVANCE INFORMATION

Copyright © 2026 Texas Instruments Incorporated

ADVANCE INFORMATION

6.16 782MHz - 957MHz Receive (RX) (continued)

When measured on the BP-CC1402P-8-FE reference design with T_c = 25°C, V_{DDS} = 3.6V.All measurements are performed at the antenna input with a combined RX and TX path and through an RF switch as part of the reference design. All measurements are performed conducted. All measurements are using 250 byte PSDU < 10% PER unless otherwise noted.

PARAMETER	TEST CONDITIONS	MIN	TYP	MAX	UNIT
Symbol rate error tolerance (ppm)	1% BER, measured at 10dB above sensitivity level Positive offset		3000		ppm
Wi-SUN, 50kbps, ±12.5kHz deviation, FSK, 61kHz RX BW, #1a					
Sensitivity	50kbps, ±12.5kHz deviation, FSK, 866.6MHz, 10% PER, 250 byte payload (w/ uLNA)		-112		dBm
Sensitivity	50ksps (25kbps), ±12.5kHz deviation, FSK, 866.6MHz, 10% PER, 250 byte payload (w/uLNA), FEC enabled		-114		dBm
Saturation limit	10% PER, 250 byte payload, 866.6MHz		10		dBm
Selectivity, +100kHz	10% PER, 250 byte payload, wanted level -88dBm, CW interferer		39		dB
Selectivity, -100kHz	10% PER, 250 byte payload, wanted level -88dBm, CW interferer		39		dB
Selectivity, +200kHz	10% PER, 250 byte payload, wanted level -88dBm, CW interferer		48		dB
Selectivity, -200kHz	10% PER, 250 byte payload, wanted level -88dBm, CW interferer		48		dB
Image rejection (image compensation enabled)	10% PER, 250 byte payload, wanted level -88dBm, CW interferer		38		dB
Blocking, +1MHz	10% PER, 250 byte payload, wanted level -94dBm, CW interferer		62		dB
Blocking, -1MHz	10% PER, 250 byte payload, wanted level -94dBm, CW interferer		62		dB
Blocking, +2MHz	10% PER, 250 byte payload, wanted level -94dBm, CW interferer		69		dB
Blocking, -2MHz	10% PER, 250 byte payload, wanted level -94dBm, CW interferer		67		dB
Blocking, +10MHz	10% PER, 250 byte payload, wanted level -94dBm, CW interferer		70		dB
Blocking, -10MHz	10% PER, 250 byte payload, wanted level -94dBm, CW interferer		80		dB
Blocking + 5% Fc. (43.42MHz)	10% PER, 250 byte payload, wanted level -94dBm, CW interferer		-19		dBm
Blocking - 5% Fc. (-43.42MHz)	10% PER, 250 byte payload, wanted level -94dBm, CW interferer		-15		dBm
RSSI accuracy	Starting from the sensitivity limit across the given dynamic range		±3		dB
Frequency error tolerance (ppm)	10% PER, 250 byte payload, measured at 10dB above sensitivity level. Negative offset		-20		ppm
Frequency error tolerance (ppm)	10% PER, 250 byte payload, measured at 10dB above sensitivity level. Positive offset		20		ppm
Symbol rate error tolerance (ppm)	10% PER, 250 byte payload, measured at 10dB above sensitivity level. Negative offset		-1000		ppm
Symbol rate error tolerance (ppm)	10% PER, 250 byte payload, measured at 10dB above sensitivity level. Positive offset		1000		ppm
Wi-SUN, 50kbps, ±25kHz deviation, FSK, 85kHz RX BW, #1b					
Sensitivity	50kbps, ±25kHz deviation, FSK, 920.1MHz, 10% PER, 250 byte payload (w/ uLNA)		-110		dBm
Sensitivity	50ksps (25kbps), ±25kHz deviation, FSK, 920.1MHz, 10% PER, 250 byte payload (w/uLNA), FEC enabled		-114		dBm
Saturation limit	10% PER, 250 byte payload, 920.1MHz		10		dBm
Selectivity, +200kHz	10% PER, 250 byte payload, wanted level -88dBm, CW interferer		46		dB
Selectivity, -200kHz	10% PER, 250 byte payload, wanted level -88dBm, CW interferer		44		dB
Selectivity, +400kHz	10% PER, 250 byte payload, wanted level -88dBm, CW interferer		51		dB
Selectivity, -400kHz	10% PER, 250 byte payload, wanted level -88dBm, CW interferer		50		dB
Image rejection (image compensation enabled)	10% PER, 250 byte payload, wanted level -88dBm, CW interferer		37		dB
Blocking, +1MHz	10% PER, 250 byte payload, wanted level -91dBm, CW interferer		60		dB
Blocking, -1MHz	10% PER, 250 byte payload, wanted level -91dBm, CW interferer		59		dB
Blocking, +2MHz	10% PER, 250 byte payload, wanted level -91dBm, CW interferer		65		dB
Blocking, -2MHz	10% PER, 250 byte payload, wanted level -91dBm, CW interferer		64		dB
Blocking, +10MHz	10% PER, 250 byte payload, wanted level -91dBm, CW interferer		69		dB
Blocking, -10MHz	10% PER, 250 byte payload, wanted level -91dBm, CW interferer		78		dB
Blocking + 5% Fc. (43.42MHz)	10% PER, 250 byte payload, wanted level -91dBm, CW interferer		-17		dBm
Blocking - 5% Fc. (-43.42MHz)	10% PER, 250 byte payload, wanted level -91dBm, CW interferer		-14		dBm

Copyright © 2026 Texas Instruments Incorporated

6.16 782MHz - 957MHz Receive (RX) (continued)

When measured on the BP-CC1402P-8-FE reference design with T_c = 25°C, V_{DDS} = 3.6V.All measurements are performed at the antenna input with a combined RX and TX path and through an RF switch as part of the reference design. All measurements are performed conducted. All measurements are using 250 byte PSDU < 10% PER unless otherwise noted.

PARAMETER	TEST CONDITIONS	MIN	TYP	MAX	UNIT
RSSI accuracy	Starting from the sensitivity limit across the given dynamic range		±3		dB
Frequency error tolerance (ppm)	10% PER, 250 byte payload, measured at 10dB above sensitivity level. Negative offset		-35		ppm
Frequency error tolerance (ppm)	10% PER, 250 byte payload, measured at 10dB above sensitivity level. Positive offset		35		ppm
Symbol rate error tolerance (ppm)	10% PER, 250 byte payload, measured at 10dB above sensitivity level. Negative offset		-1000		ppm
Symbol rate error tolerance (ppm)	10% PER, 250 byte payload, measured at 10dB above sensitivity level. Positive offset		1000		ppm
Wi-SUN, 100kbps, ±25kHz deviation, FSK, 121kHz RX BW, #2a					
Sensitivity	100kbps, ±25kHz deviation, FSK, 866.5MHz, 10% PER, 250 byte payload (w/ uLNA)		-109		dBm
Sensitivity	100ksps (50kbps), ±25kHz deviation, FSK, 866.5MHz, 10% PER, 250 byte payload (w/uLNA), FEC enabled		-111		dBm
Saturation limit	10% PER, 250 byte payload, 866.6MHz		10		dBm
Selectivity, +200kHz	10% PER, 250 byte payload, wanted level -85dBm, CW interferer		45		dB
Selectivity, -200kHz	10% PER, 250 byte payload, wanted level -85dBm, CW interferer		43		dB
Selectivity, +400kHz	10% PER, 250 byte payload, wanted level -85dBm, CW interferer		51		dB
Selectivity, -400kHz	10% PER, 250 byte payload, wanted level -85dBm, CW interferer		49		dB
Image rejection (image compensation enabled)	10% PER, 250 byte payload, wanted level -85dBm, CW interferer		40		dB
Blocking, +1MHz	10% PER, 250 byte payload, wanted level -91dBm, CW interferer		58		dB
Blocking, -1MHz	10% PER, 250 byte payload, wanted level -91dBm, CW interferer		58		dB
Blocking, +2MHz	10% PER, 250 byte payload, wanted level -91dBm, CW interferer		63		dB
Blocking, -2MHz	10% PER, 250 byte payload, wanted level -91dBm, CW interferer		63		dB
Blocking, +10MHz	10% PER, 250 byte payload, wanted level -91dBm, CW interferer		69		dB
Blocking, -10MHz	10% PER, 250 byte payload, wanted level -91dBm, CW interferer		78		dB
Blocking + 5% Fc. (43.42MHz)	10% PER, 250 byte payload, wanted level -91dBm, CW interferer		-18		dBm
Blocking - 5% Fc. (-43.42MHz)	10% PER, 250 byte payload, wanted level -91dBm, CW interferer		-15		dBm
RSSI accuracy	Starting from the sensitivity limit across the given dynamic range		±3		dB
Frequency error tolerance (ppm)	10% PER, 250 byte payload, measured at 10dB above sensitivity level. Negative offset		-45		ppm
Frequency error tolerance (ppm)	10% PER, 250 byte payload, measured at 10dB above sensitivity level. Positive offset		45		ppm
Symbol rate error tolerance (ppm)	10% PER, 250 byte payload, measured at 10dB above sensitivity level. Negative offset		-1000		ppm
Symbol rate error tolerance (ppm)	10% PER, 250 byte payload, measured at 10dB above sensitivity level Positive offset		1000		ppm
Wi-SUN, 100kbps, ±50kHz deviation, FSK, 160kHz RX BW, #2b					
Sensitivity	100kbps, ±50kHz deviation, FSK, 922.5MHz, 10% PER, 250 byte payload (w/ uLNA)		-107		dBm
Sensitivity	100ksps (50kbps), ±50kHz deviation, FSK, 922.5MHz, 10% PER, 250 byte payload (w/uLNA), FEC enabled		-111		dBm
Saturation limit	10% PER, 250 byte payload, 922.5MHz		10		dBm
Selectivity, +400kHz	10% PER, 250 byte payload, wanted level -85dBm, CW interferer		47		dB
Selectivity, -400kHz	10% PER, 250 byte payload, wanted level -85dBm, CW interferer		44		dB
Selectivity, +800kHz	10% PER, 250 byte payload, wanted level -85dBm, CW interferer		55		dB
Selectivity, -800kHz	10% PER, 250 byte payload, wanted level -85dBm, CW interferer		53		dB
Image rejection (image compensation enabled)	10% PER, 250 byte payload, wanted level -85dBm, CW interferer		40		dB
Blocking, +1MHz	10% PER, 250 byte payload, wanted level -88dBm, CW interferer		56		dB

ADVANCE INFORMATION

ADVANCE INFORMATION

6.16 782MHz - 957MHz Receive (RX) (continued)

When measured on the BP-CC1402P-8-FE reference design with T_c = 25°C, V_{DDS} = 3.6V.All measurements are performed at the antenna input with a combined RX and TX path and through an RF switch as part of the reference design. All measurements are performed conducted. All measurements are using 250 byte PSDU < 10% PER unless otherwise noted.

PARAMETER	TEST CONDITIONS	MIN	TYP	MAX	UNIT
Blocking, -1MHz	10% PER, 250 byte payload, wanted level -88dBm, CW interferer		56		dB
Blocking, +2MHz	10% PER, 250 byte payload, wanted level -88dBm, CW interferer		62		dB
Blocking, -2MHz	10% PER, 250 byte payload, wanted level -88dBm, CW interferer		61		dB
Blocking, +10MHz	10% PER, 250 byte payload, wanted level -88dBm, CW interferer		67		dB
Blocking, -10MHz	10% PER, 250 byte payload, wanted level -88dBm, CW interferer		77		dB
Blocking + 5% Fc. (43.42MHz)	10% PER, 250 byte payload, wanted level -88dBm, CW interferer		-16		dBm
Blocking - 5% Fc. (-43.42MHz)	10% PER, 250 byte payload, wanted level -88dBm, CW interferer		-14		dBm
RSSI accuracy	Starting from the sensitivity limit across the given dynamic range		±3		dB
Frequency error tolerance (ppm)	10% PER, 250 byte payload, measured at 10dB above sensitivity level. Negative offset		-50		ppm
Frequency error tolerance (ppm)	10% PER, 250 byte payload, measured at 10dB above sensitivity level. Positive offset		50		ppm
Symbol rate error tolerance (ppm)	10% PER, 250 byte payload, measured at 10dB above sensitivity level. Negative offset		-1000		ppm
Symbol rate error tolerance (ppm)	10% PER, 250 byte payload, measured at 10dB above sensitivity level Positive offset		1000		ppm
Wi-SUN, 150kbps, ±37.5kHz deviation, FSK, 181kHz RX BW, #3					
Sensitivity	150kbps, ±37.5kHz deviation, FSK, 920.1MHz, 10% PER, 250 byte payload ((w/uLNA)		-107		dBm
Sensitivity	150kbps (75kbps), ±37.5kHz deviation, FSK, 920.1MHz, 10% PER, 250 byte payload ((wo/uLNA), FEC enabled		-109		dBm
Saturation limit	10% PER, 250 byte payload, 920.1MHz		10		dBm
Selectivity, +400kHz	10% PER, 250 byte payload, wanted level -83dBm, CW interferer		48		dB
Selectivity, -400kHz	10% PER, 250 byte payload, wanted level -83dBm, CW interferer		43		dB
Selectivity, +800kHz	10% PER, 250 byte payload, wanted level -83dBm, CW interferer		55		dB
Selectivity, -800kHz	10% PER, 250 byte payload, wanted level -83dBm, CW interferer		51		dB
Image rejection (image compensation enabled)	10% PER, 250 byte payload, wanted level -83dBm, CW interferer		41		dB
Blocking, +1MHz	10% PER, 250 byte payload, wanted level -88dBm, CW interferer		57		dB
Blocking, -1MHz	10% PER, 250 byte payload, wanted level -88dBm, CW interferer		57		dB
Blocking, +2MHz	10% PER, 250 byte payload, wanted level -88dBm, CW interferer		62		dB
Blocking, -2MHz	10% PER, 250 byte payload, wanted level -88dBm, CW interferer		61		dB
Blocking, +10MHz	10% PER, 250 byte payload, wanted level -88dBm, CW interferer		66		dB
Blocking, -10MHz	10% PER, 250 byte payload, wanted level -88dBm, CW interferer		75		dB
Blocking + 5% Fc. (43.42MHz)	10% PER, 250 byte payload, wanted level -88dBm, CW interferer		-16		dBm
Blocking - 5% Fc. (-43.42MHz)	10% PER, 250 byte payload, wanted level -88dBm, CW interferer		-13		dBm
RSSI accuracy	Starting from the sensitivity limit across the given dynamic range		±3		dB
Frequency error tolerance (ppm)	10% PER, 250 byte payload, measured at 10dB above sensitivity level. Negative offset		-60		ppm
Frequency error tolerance (ppm)	10% PER, 250 byte payload, measured at 10dB above sensitivity level. Positive offset		60		ppm
Symbol rate error tolerance (ppm)	10% PER, 250 byte payload, measured at 10dB above sensitivity level. Negative offset		-1000		ppm
Symbol rate error tolerance (ppm)	10% PER, 250 byte payload, measured at 10dB above sensitivity level Positive offset		1000		ppm
Wi-SUN, 200kbps, ±50kHz deviation, FSK, 212kHz RX BW, #4a					
Sensitivity	200kbps, ±50kHz deviation, FSK, 920.1MHz, 10% PER, 250 byte payload (w/ uLNA)		-106		dBm
Sensitivity	200ksps (100kbps) , ±50kHz deviation, FSK, 920.1MHz, 10% PER, 250 byte payload (w/uLNA), FEC enabled		-107		dBm
Saturation limit	10% PER, 250 byte payload, 920.1MHz		10		dBm

Copyright © 2026 Texas Instruments Incorporated

6.16 782MHz - 957MHz Receive (RX) (continued)

When measured on the BP-CC1402P-8-FE reference design with T_c = 25°C, V_{DDS} = 3.6V.All measurements are performed at the antenna input with a combined RX and TX path and through an RF switch as part of the reference design. All measurements are performed conducted. All measurements are using 250 byte PSDU < 10% PER unless otherwise noted.

PARAMETER	TEST CONDITIONS	MIN	TYP	MAX	UNIT
Selectivity, +400kHz	10% PER, 250 byte payload, wanted level -82dBm, CW interferer		47		dB
Selectivity, -400kHz	10% PER, 250 byte payload, wanted level -82dBm, CW interferer		42		dB
Selectivity, +800kHz	10% PER, 250 byte payload, wanted level -82dBm, CW interferer		54		dB
Selectivity, -800kHz	10% PER, 250 byte payload, wanted level -82dBm, CW interferer		50		dB
Image rejection (image compensation enabled)	10% PER, 250 byte payload, wanted level -82dBm, CW interferer		40		dB
Blocking, +1MHz	10% PER, 250 byte payload, wanted level -82dBm, CW interferer		56		dB
Blocking, -1MHz	10% PER, 250 byte payload, wanted level -82dBm, CW interferer		56		dB
Blocking, +2MHz	10% PER, 250 byte payload, wanted level -82dBm, CW interferer		61		dB
Blocking, -2MHz	10% PER, 250 byte payload, wanted level -82dBm, CW interferer		60		dB
Blocking, +10MHz	10% PER, 250 byte payload, wanted level -82dBm, CW interferer		65		dB
Blocking, -10MHz	10% PER, 250 byte payload, wanted level -82dBm, CW interferer		75		dB
Blocking + 5% Fc. (43.42MHz)	10% PER, 250 byte payload, wanted level -82dBm, CW interferer		-17		dBm
Blocking - 5% Fc. (-43.42MHz)	10% PER, 250 byte payload, wanted level -82dBm, CW interferer		-14		dBm
RSSI accuracy	Starting from the sensitivity limit across the given dynamic range		±3		dB
Frequency error tolerance (ppm)	10% PER, 250 byte payload, measured at 10dB above sensitivity level. Negative offset		-75		ppm
Frequency error tolerance (ppm)	10% PER, 250 byte payload, measured at 10dB above sensitivity level. Positive offset		75		ppm
Symbol rate error tolerance (ppm)	10% PER, 250 byte payload, measured at 10dB above sensitivity level. Negative offset		-1000		ppm
Symbol rate error tolerance (ppm)	10% PER, 250 byte payload, measured at 10dB above sensitivity level Positive offset		1000		ppm
Wi-SUN, 200kbps, ±100kHz deviation, FSK, 271kHz RX BW, #4b					
Sensitivity	200kbps, ±100kHz deviation, FSK, 922.6MHz, 10% PER, 250 byte payload (w/uLNA)		-104		dBm
Sensitivity	200ksps (100kbps), ±100kHz deviation, FSK, 922.6MHz, 10% PER, 250 byte payload (w/uLNA), FEC enabled		-109		dBm
Saturation limit	10% PER, 250 byte payload, 922.6MHz		10		dBm
Selectivity, +600kHz	10% PER, 250 byte payload, wanted level -82dBm, CW interferer		49		dB
Selectivity, -600kHz	10% PER, 250 byte payload, wanted level -82dBm, CW interferer		42		dB
Selectivity, +1200kHz	10% PER, 250 byte payload, wanted level -82dBm, CW interferer		54		dB
Selectivity, -1200kHz	10% PER, 250 byte payload, wanted level -82dBm, CW interferer		52		dB
Image rejection (image compensation enabled)	10% PER, 250 byte payload, wanted level -82dBm, CW interferer		39		dB
Blocking, +1MHz	10% PER, 250 byte payload, wanted level -86dBm, CW interferer		55		dB
Blocking, -1MHz	10% PER, 250 byte payload, wanted level -86dBm, CW interferer		37		dB
Blocking, +2MHz	10% PER, 250 byte payload, wanted level -86dBm, CW interferer		59		dB
Blocking, -2MHz	10% PER, 250 byte payload, wanted level -86dBm, CW interferer		58		dB
Blocking, +10MHz	10% PER, 250 byte payload, wanted level -86dBm, CW interferer		64		dB
Blocking, -10MHz	10% PER, 250 byte payload, wanted level -86dBm, CW interferer		70		dB
Blocking + 5% Fc. (43.42MHz)	10% PER, 250 byte payload, wanted level -86dBm, CW interferer		-18		dBm
Blocking - 5% Fc. (-43.42MHz)	10% PER, 250 byte payload, wanted level -86dBm, CW interferer		-14		dBm
RSSI accuracy	Starting from the sensitivity limit across the given dynamic range		±3		dB
Frequency error tolerance (ppm)	10% PER, 250 byte payload, measured at 10dB above sensitivity level. Negative offset		-75		ppm
Frequency error tolerance (ppm)	10% PER, 250 byte payload, measured at 10dB above sensitivity level. Positive offset		70		ppm
Symbol rate error tolerance (ppm)	10% PER, 250 byte payload, measured at 10dB above sensitivity level. Negative offset		-1000		ppm

ADVANCE INFORMATION

ADVANCE INFORMATION

6.16 782MHz - 957MHz Receive (RX) (continued)

When measured on the BP-CC1402P-8-FE reference design with T_c = 25°C, V_{DDS} = 3.6V.All measurements are performed at the antenna input with a combined RX and TX path and through an RF switch as part of the reference design. All measurements are performed conducted. All measurements are using 250 byte PSDU < 10% PER unless otherwise noted.

PARAMETER	TEST CONDITIONS	MIN	TYP	MAX	UNIT
Symbol rate error tolerance (ppm)	10% PER, 250 byte payload, measured at 10dB above sensitivity level Positive offset		1000		ppm
Wi-SUN, 300kbps, ±75kHz deviation, FSK, 339kHz RX BW, #5					
Sensitivity	300kbps, ±75kHz deviation, FSK, 922.6MHz, 10% PER, 250 byte payload (w/ uLNA)		-104		dBm
Sensitivity	300ksps (150kbsp), ±75kHz deviation, FSK, 922.6MHz, 10% PER, 250 byte payload (w/uLNA), FEC enabled		-106		dBm
Saturation limit	10% PER, 250 byte payload, 922.6MHz		10		dBm
Selectivity, +600kHz	10% PER, 250 byte payload, wanted level -80dBm, CW interferer		47		dB
Selectivity, -600kHz	10% PER, 250 byte payload, wanted level -80dBm, CW interferer		40		dB
Selectivity, +1200kHz	10% PER, 250 byte payload, wanted level -80dBm, CW interferer		54		dB
Selectivity, -1200kHz	10% PER, 250 byte payload, wanted level -80dBm, CW interferer		51		dB
Image rejection (image compensation enabled)	10% PER, 250 byte payload, wanted level -80dBm, CW interferer		39		dB
Blocking, +2MHz	10% PER, 250 byte payload, wanted level -86dBm, CW interferer		59		dB
Blocking, -2MHz	10% PER, 250 byte payload, wanted level -86dBm, CW interferer		58		dB
Blocking, +10MHz	10% PER, 250 byte payload, wanted level -86dBm, CW interferer		64		dB
Blocking, -10MHz	10% PER, 250 byte payload, wanted level -86dBm, CW interferer		73		dB
Blocking + 5% Fc. (43.42MHz)	10% PER, 250 byte payload, wanted level -86dBm, CW interferer		-18		dBm
Blocking - 5% Fc. (-43.42MHz)	10% PER, 250 byte payload, wanted level -86dBm, CW interferer		-14		dBm
RSSI accuracy	Starting from the sensitivity limit across the given dynamic range		±3		dB
Frequency error tolerance (ppm)	10% PER, 250 byte payload, measured at 10dB above sensitivity level. Negative offset		-125		ppm
Frequency error tolerance (ppm)	10% PER, 250 byte payload, measured at 10dB above sensitivity level. Positive offset		125		ppm
Symbol rate error tolerance (ppm)	10% PER, 250 byte payload, measured at 10dB above sensitivity level. Negative offset		-1000		ppm
Symbol rate error tolerance (ppm)	10% PER, 250 byte payload, measured at 10dB above sensitivity level Positive offset		1000		ppm
OOK, 4.8kbps, 141kHz RX BW					
Sensitivity	920.8MHz, with uLNA, BER 0.1%		-110		dBm
Sensitivity	868.2MHz, with uLNA, BER 0.1%		-110		dBm
Saturation limit	868.2MHz, BER 0.1%		0		dBm
Selectivity, +400kHz	868.2MHz. Wanted Level -91dBm, CW interferer, BER 0.1%		47		dB
Selectivity, -400kHz	868.2MHz. Wanted Level -91dBm, CW interferer, BER 0.1%		47		dB
Blocking, +2MHz	868.2MHz. Wanted Level -91dBm, CW interferer, BER 0.1%		70		dB
Blocking, -2MHz	868.2MHz. Wanted Level -91dBm, CW interferer, BER 0.1%		70		dB
Blocking, +10MHz	868.2MHz. Wanted Level -91dBm, CW interferer, BER 0.1%		75		dB
Blocking, -10MHz	868.2MHz. Wanted Level -91dBm, CW interferer, BER 0.1%		75		dB
Image rejection (image compensation enabled)	868.2MHz. Wanted Level -91dBm, BER 0.1%		40		dB
RSSI dynamic range	Starting from the sensitivity limit		95		dB
RSSI accuracy	Starting from the sensitivity limit across the given dynamic range		±3		dB
Symbol rate error tolerance (ppm)	868.2MHz. Wanted Level -91dBm, BER 0.1%,		±1000		ppm
OOK, 16.384kkps, 78kHz RX BW					
Sensitivity	16.384kbps OOK, 32.768kcps, 915.0MHz, 0.1% BER, w/uLNA		-115		dBm
Sensitivity	16.384kbps OOK, 32.768kcps, 868.0MHz, 0.1% BER, w/uLNA		-114		dBm
Saturation limit	915.0MHz. Wanted signal 3dB above sensitivity level		0		dBm
Selectivity, +200kHz	915.0MHz. Wanted signal 3dB above sensitivity level		52		dB

Copyright © 2026 Texas Instruments Incorporated

6.16 782MHz - 957MHz Receive (RX) (continued)

When measured on the BP-CC1402P-8-FE reference design with T_c = 25°C, V_{DDS} = 3.6V.All measurements are performed at the antenna input with a combined RX and TX path and through an RF switch as part of the reference design. All measurements are performed conducted. All measurements are using 250 byte PSDU < 10% PER unless otherwise noted.

PARAMETER	TEST CONDITIONS	MIN	TYP	MAX	UNIT
Selectivity, -200kHz	915.0MHz. Wanted signal 3dB above sensitivity level		48		dB
Blocking, +2MHz	915.0MHz. Wanted signal 3dB above sensitivity level		64		dB
Blocking, -2MHz	915.0MHz. Wanted signal 3dB above sensitivity level		59		dB
Blocking, +10MHz	915.0MHz. Wanted signal 3dB above sensitivity level		64		dB
Blocking, -10MHz	915.0MHz. Wanted signal 3dB above sensitivity level		58		dB
Image rejection (image compensation enabled)	915.0MHz. Wanted signal 3dB above sensitivity level		39		dB
Image rejection (image compensation enabled)	915.0MHz. Wanted signal 3dB above sensitivity level		39		dB
Image rejection (image compensation enabled)	-40 to 105℃, 915.0MHz		35		dB
RSSI dynamic range	Starting from the sensitivity limit		95		dB
RSSI accuracy	Starting from the sensitivity limit across the given dynamic range		±3		dB
Frequency error tolerance (ppm)	Measured at 10dB above sensitivity level. Negative offset		-40		ppm
Frequency error tolerance (ppm)	Measured at 10dB above sensitivity level. Positive offset		40		ppm
Frequency error tolerance (ppm)	Measured at 10dB above sensitivity level. Calculated from results above.		±40		ppm
Symbol rate error tolerance (ppm)	Measured at 10dB above sensitivity level. Negative offset		-2000		ppm
Symbol rate error tolerance (ppm)	Measured at 10dB above sensitivity level Positive offset		2000		ppm
Symbol rate error tolerance (ppm)	Measured at 10dB above sensitivity level. Calculated from results above.		±2000		ppm
4GFSK, 1500kbps, ±375kHz deviation, 1185kHz RX BW					
Sensitivity	0.1% BER, 915MHz, w/uLNA		-94		dBm
Saturation limit	0.1% BER, 915MHz, w/uLNA		10		dBm
Selectivity, +2000kHz	915.0MHz		29		dB
Selectivity, -2000kHz	915.0MHz		30		dB
Blocking, +10MHz	915.0MHz		57		dB
Blocking, -10MHz	915.0MHz		60		dB
Blocking + 5% Fc. (43.42MHz)	915.0MHz, wanted signal -84dBm.		60		dB
Blocking - 5% Fc. (-43.42MHz)	915.0MHz, wanted signal -84dBm.		60		dB
Image rejection (image compensation enabled)	915.0MHz. Wanted signal 3dB above sensitivity level.		27		dB
RSSI accuracy	Starting from the sensitivity limit across the given dynamic range		±3		dB
Frequency error tolerance (ppm)	Measured at 10dB above sensitivity level. Negative offset		-80		ppm
Frequency error tolerance (ppm)	Measured at 10dB above sensitivity level. Positive offset		80		ppm
Symbol rate error tolerance (ppm)	Measured at 10dB above sensitivity level. Negative offset		-2000		ppm
Symbol rate error tolerance (ppm)	Measured at 10dB above sensitivity level Positive offset		2000		ppm
GFSK, 1000kbps, ±250kHz deviation, 1185kHz RX BW					
Sensitivity	GFSK, 1000kbps, 2-GFSK, 915.0MHz, 0.1% BER (w/uLNA)		-98		dBm
Saturation limit	915.0MHz		10		dBm
Selectivity, +1000kHz	915.0MHz. Wanted signal at -84dBm		41		dB
Selectivity, -1000kHz	915.0MHz. Wanted signal at -84dBm		27		dB
Blocking, +2MHz	915.0MHz. Wanted signal at -84dBm		43		dB
Blocking, -2MHz	915.0MHz. Wanted signal at -84dBm		40		dB
Blocking, +10MHz	915.0MHz. Wanted signal at -84dBm		62		dB
Blocking, -10MHz	915.0MHz. Wanted signal at -84dBm		61		dB
Blocking + 5% Fc. (43.42MHz)	915.0MHz. Wanted signal at -84dBm		64		dB
Blocking - 5% Fc. (-43.42MHz)	915.0MHz. Wanted signal at -84dBm		63		dB
Image rejection (image compensation enabled)	915.0MHz. Wanted signal at -84dBm		27		dB

ADVANCE INFORMATION

ADVANCE INFORMATION

6.16 782MHz - 957MHz Receive (RX) (continued)

When measured on the BP-CC1402P-8-FE reference design with T_c = 25°C, V_{DDS} = 3.6V.All measurements are performed at the antenna input with a combined RX and TX path and through an RF switch as part of the reference design. All measurements are performed conducted. All measurements are using 250 byte PSDU < 10% PER unless otherwise noted.

PARAMETER	TEST CONDITIONS	MIN	TYP	MAX	UNIT
RSSI accuracy	Starting from the sensitivity limit across the given dynamic range		±3		dB
Frequency error tolerance (ppm)	Measured at 10dB above sensitivity level. Negative offset		-400		ppm
Frequency error tolerance (ppm)	Measured at 10dB above sensitivity level. Positive offset		350		ppm
Symbol rate error tolerance (ppm)	Measured at 10dB above sensitivity level. Negative offset		-1800		ppm
Symbol rate error tolerance (ppm)	Measured at 10dB above sensitivity level Positive offset		1800		ppm
FSK, 10kbps, ±20kHz deviation, 200kHz RX BW					
Sensitivity	FSK, 10kbps, ±20kHz deviation, FSK, 868.3MHz, 20 byte PSDU < 15% PER		-113		dBm
Saturation limit	0.1% BER , 868.3MHz.		10		dBm
Selectivity, +200kHz	0.1% BER , 868.3MHz. Wanted level: -94dBm		43		dB
Selectivity, -200kHz	0.1% BER , 868.3MHz. Wanted level: -94dBm		40		dB
Blocking, +2MHz	0.1% BER , 868.3MHz. Wanted level: -94dBm		70		dB
Blocking, -2MHz	0.1% BER , 868.3MHz. Wanted level: -94dBm		68		dB
Blocking, +10MHz	0.1% BER , 868.3MHz. Wanted level: -94dBm		72		dB
Blocking, -10MHz	0.1% BER , 868.3MHz. Wanted level: -94dBm		81		dB
Blocking + 5% Fc. (45.75MHz)	20 byte PSDU < 10% PER, 866.6MHz, wanted signal -94dBm. 3dB above usable sensitivity limit according to ETSI EN 300 220 V3.1.1 (usable sensitivity -97dBm). Limit is Cat 1.5 requirement.		-14		dBm
Blocking - 5% Fc. (-45.75MHz)	20 byte PSDU < 10% PER, 866.6MHz, wanted signal -94dBm. 3dB above usable sensitivity limit according to ETSI EN 300 220 V3.1.1 (usable sensitivity -97dBm). Limit is Cat 1.5 requirement.		-12		dBm
Image rejection (image compensation enabled)	0.1% BER , 868.3MHz.		41		dB
RSSI accuracy	Starting from the sensitivity limit across the given dynamic range		±3		dB
Symbol rate error tolerance (ppm)	, 868.3MHz. Wanted level: -94dBm. Negative offset		-2000		ppm
Symbol rate error tolerance (ppm)	868.3MHz. Wanted level: -94dBm. Positive offset		2000		ppm
CC14xx Long Range, 1.25/2.5/5kbps (20ksps), ±5kHz deviation, 34kHz RX Bandwidth, FEC = 1:2, CL=4, DSSS = 1:8/1:4/1:2					
Sensitivity	1.25kbps, BER = 0.1%, w/uLNA enabled, 868.3MHz		-122		dBm
Sensitivity	2.5kbps, BER = 0.1%, w/uLNA enabled, 868.3MHz		-121		dBm
Sensitivity	5kbps, BER = 0.1%, w/uLNA enabled, 868.3MHz		-119		dBm
Saturation limit	5kbps, BER = 0.1%, w/uLNA enabled, 868.3MHz		10		dBm
Selectivity, +100kHz	5kbps, BER = 0.1%, 868.3MHz		46		dB
Selectivity, -100kHz	5kbps, BER = 0.1%, 868.3MHz		48		dB
Blocking, +2MHz	5kbps, BER = 0.1%, 868.3MHz		76		dB
Blocking, -2MHz	5kbps, BER = 0.1%, 868.3MHz		73		dB
Blocking, +10MHz	5kbps, BER = 0.1%, 868.3MHz		76		dB
Blocking, -10MHz	5kbps, BER = 0.1%, 868.3MHz		83		dB
Blocking + 5% Fc. (43.42MHz)	5kbps, BER = 0.1%, 868.3MHz		-11		dBm
Blocking - 5% Fc. (43.42MHz)	5kbps, BER = 0.1%, 868.3MHz		-11		dBm
Image rejection (image compensation enabled)	5kbps, BER = 0.1%, 868.3MHz		42		dB
RSSI accuracy	Starting from the sensitivity limit across the given dynamic range		±3		dB
Frequency error tolerance (ppm)	20 byte PSDU < 15% PER, measured at 10dB above sensitivity level. Negative offset		-20		ppm
Frequency error tolerance (ppm)	20 byte PSDU < 15% PER, measured at 10dB above sensitivity level. Positive offset		20		ppm
Symbol rate error tolerance (ppm)	250 byte PSDU < 15% PER, measured at 10dB above sensitivity level. Negative offset		-150		ppm
Symbol rate error tolerance (ppm)	250 byte PSDU < 15% PER, measured at 10dB above sensitivity level. Positive offset		150		ppm
Wireless M-Bus, C1 mode, 100kbps ±45kHz deviation, FSK, 282kHz RX_BW					

Copyright © 2026 Texas Instruments Incorporated

6.16 782MHz - 957MHz Receive (RX) (continued)

When measured on the BP-CC1402P-8-FE reference design with T_c = 25°C, V_{DDS} = 3.6V.All measurements are performed at the antenna input with a combined RX and TX path and through an RF switch as part of the reference design. All measurements are performed conducted. All measurements are using 250 byte PSDU < 10% PER unless otherwise noted.

PARAMETER	TEST CONDITIONS	MIN	TYP	MAX	UNIT
Sensitivity, wM-BUS C1-mode	100kbps ±45kHz, 1% BER (wo/uLNA)		-107		dBm
Sensitivity, wM-BUS C1-mode	100kbps ±45kHz, 1% BER (w/uLNA)		-109		dBm
Saturation limit, wM-BUS C1-mode	100kbps ±45kHz, 1% BER (w/uLNA)		10		dBm
Selectivity, +400kHz	0.1% BER, wanted level -89.5dBm, CW interferer		48		dB
Selectivity, -400kHz	0.1% BER, wanted level -89.5dBm, CW interferer		40		dB
Image rejection (image compensation enabled)	0.1% BER, wanted level -89.5dBm, CW interferer		37		dB
Blocking, +2MHz	0.1% BER, wanted level -89.5dBm, CW interferer		65		dB
Blocking, -2MHz	0.1% BER, wanted level -89.5dBm, CW interferer		63		dB
Blocking, +10MHz	0.1% BER, wanted level -89.5dBm, CW interferer		69		dB
Blocking, -10MHz	0.1% BER, wanted level -89.5dBm, CW interferer		78		dB
Blocking + 5% Fc. (43.42MHz)	0.1% BER, wanted level -89.5dBm, CW interferer		75		dB
Blocking - 5% Fc. (43.42MHz)	0.1% BER, wanted level -89.5dBm, CW interferer		77		dB
RSSI dynamic range	Starting from the sensitivity limit		102		dB
RSSI accuracy	Starting from the sensitivity limit across the given dynamic range		±3		dB
Wireless M-Bus, T mode, 100kbps ±50kHz deviation, FSK, 282kHz RX_BW					
Sensitivity, wM-BUS T1-mode	100kbps ±50kHz, 1% BER (wo/uLNA), 868.95MHz		-105		dBm
Sensitivity, wM-BUS T1-mode	100kbps ±50kHz, 1% BER (w/uLNA), 868.95MHz		-108		dBm
Saturation limit, wM-BUS T1-mode	100kbps ±50kHz, 1% BER (w/uLNA), 868.95MHz		10		dBm
Selectivity, +400kHz	0.1% BER, wanted level -89.5dBm, CW interferer		47		dB
Selectivity, -400kHz	0.1% BER, wanted level -89.5dBm, CW interferer		40		dB
Blocking, +2MHz	0.1% BER, wanted level -89.5dBm, CW interferer		64		dB
Blocking, -2MHz	0.1% BER, wanted level -89.5dBm, CW interferer		63		dB
Blocking, +10MHz	0.1% BER, wanted level -89.5dBm, CW interferer		69		dB
Blocking, -10MHz	0.1% BER, wanted level -89.5dBm, CW interferer		78		dB
Blocking + 5% Fc. (43.42MHz)	0.1% BER, wanted level -89.5dBm, CW interferer		74		dB
Blocking - 5% Fc. (43.42MHz)	0.1% BER, wanted level -89.5dBm, CW interferer		77		dB
RSSI dynamic range	Starting from the sensitivity limit		102		dB
RSSI accuracy	Starting from the sensitivity limit across the given dynamic range		±3		dB
Wireless M-Bus, C2 mode, 50kbps ±25kHz deviation, FSK, 121kHz RX_BW					
Sensitivity, wM-BUS C2-mode	50kbps ±25kHz, 1% BER (w/uLNA)		-113		dBm
Saturation limit, wM-BUS C2-mode	50kbps ±25kHz, 1% BER (w/uLNA)		10		dBm
Selectivity, +400kHz	0.1% BER, wanted level -89.5dBm, CW interferer		51		dB
Selectivity, -400kHz	0.1% BER, wanted level -89.5dBm, CW interferer		41		dB
Image rejection (image compensation enabled)	0.1% BER, wanted level -89.5dBm, CW interferer		38		dB
Blocking, +2MHz	0.1% BER, wanted level -89.5dBm, CW interferer		68		dB
Blocking, -2MHz	0.1% BER, wanted level -89.5dBm, CW interferer		67		dB
Blocking, +10MHz	0.1% BER, wanted level -89.5dBm, CW interferer		72		dB
Blocking, -10MHz	0.1% BER, wanted level -89.5dBm, CW interferer		83		dB
Blocking + 5% Fc. (43.42MHz)	0.1% BER, wanted level -89.5dBm, CW interferer		79		dB
Blocking - 5% Fc. (43.42MHz)	0.1% BER, wanted level -89.5dBm, CW interferer		81		dB
RSSI dynamic range	Starting from the sensitivity limit		112		dB
RSSI accuracy	Starting from the sensitivity limit across the given dynamic range		±3		dB
Wireless M-Bus, S mode, 32.768kbps ±50kHz deviation, FSK, 211kHz RX_BW					
Sensitivity, wM-BUS S2/T2-mode	32.768kbps ±50kHz, 1% BER (w/uLNA), 868.3MHz		-113		dBm
Saturation limit, wM-BUS S2/T2-mode	32.768kbps ±50kHz, 1% BER (w/uLNA), 868.3MHz		10		dBm

ADVANCE INFORMATION

Copyright © 2026 Texas Instruments Incorporated

ADVANCE INFORMATION

6.16 782MHz - 957MHz Receive (RX) (continued)

When measured on the BP-CC1402P-8-FE reference design with T_c = 25°C, V_{DDS} = 3.6V.All measurements are performed at the antenna input with a combined RX and TX path and through an RF switch as part of the reference design. All measurements are performed conducted. All measurements are using 250 byte PSDU < 10% PER unless otherwise noted.

PARAMETER	TEST CONDITIONS	MIN	TYP	MAX	UNIT
Selectivity, +200kHz	0.1% BER, wanted level -90.7dBm, CW interferer		45		dB
Selectivity, -200kHz	0.1% BER, wanted level -90.7dBm, CW interferer		40		dB
Image rejection (image compensation enabled)	0.1% BER, wanted level -90.7dBm, CW interferer		39		dB
Blocking, +2MHz	0.1% BER, wanted level -90.7dBm, CW interferer		71		dB
Blocking, -2MHz	0.1% BER, wanted level -90.7dBm, CW interferer		68		dB
Blocking, +10MHz	0.1% BER, wanted level -90.7dBm, CW interferer		72		dB
Blocking, -10MHz	0.1% BER, wanted level -90.7dBm, CW interferer		81		dB
Blocking + 5% Fc. (43.42MHz)	0.1% BER, wanted level -90.7dBm, CW interferer		78		dB
Blocking - 5% Fc. (43.42MHz)	0.1% BER, wanted level -90.7dBm, CW interferer		81		dB
RSSI dynamic range	Starting from the sensitivity limit		113		dB
RSSI accuracy	Starting from the sensitivity limit across the given dynamic range		±3		dB

Copyright © 2026 Texas Instruments Incorporated

6.17 782 MHz - 957 MHz Transmit (TX)

When measured on the BP-CC1402P-8-FE reference design with T_c = 25 °C, V_{DDS} = 3.6 V, f_{RF} = 915 MHz with DC/DC enabled unless otherwise noted. All measurements are performed at the antenna input with a combined RX and TX path. All measurements are performed conducted. Unless otherwise noted, the 14 dBm setting is measured in a single ended RF configurations and the 16dBm is in a differential configuration (using the same PA). The 22dBm PA is used in a differential configuration.

PARAMETER		TEST CONDITIONS	MIN	TYP	MAX	UNIT
General parameters						
Max output power	High Efficiency PA, single-ended mode	868 MHz and 915 MHz		14		dBm
Output power programmable range	High Efficiency PA, single-ended mode	868 MHz and 915 MHz		44		dB
Output power variation over temperature	High Efficiency PA, single-ended mode	+10 dBm setting Over recommended temperature operating range		±2		dB
Output power variation over temperature	High Efficiency PA, single-ended mode	Max Setting Over recommended temperature operating range		±1.5		dB
Max output power	High Efficiency PA, differential mode	868 MHz and 915 MHz		16		dBm
Output power programmable range	High Efficiency PA, differential mode	868 MHz and 915 MHz		46		dB
Output power variation over temperature	High Efficiency PA, differential mode	+10 dBm setting Over recommended temperature operating range		±2		dB
Output power variation over temperature	High Efficiency PA, differential mode	Max Setting Over recommended temperature operating range		±1.5		dB
Minimum TX power	High Efficiency PA, differential mode	50kbps FSK, 915MHz		-30		dBm
Packet payload size			0	250	2047	bytes
Frequency deviation resolution	FSK	915 MHz		10		Hz
RF frequency resolution	All PHYs	915MHz		4		Hz
Max output power	High Power PA	868 MHz and 915 MHz		22		dBm
Output power programmable range	High Power PA	868 MHz and 915 MHz		32		dB
Output power variation over temperature	High Power PA	+10 dBm setting Over recommended temperature operating range		±2		dB
Output power variation over temperature	High Power PA	+22 dBm setting Over recommended temperature operating range		±1.5		dB
Minimum TX power	High Power PA	50kbps FSK, 915MHz		-30		dBm
Max output power	High Power PA on VDDR	868 MHz and 915 MHz		15		dBm
Output power programmable range	High Power PA on VDDR	868 MHz and 915 MHz		35		dB
Output power variation over temperature	High Power PA on VDDR	+10 dBm setting Over recommended temperature operating range		±2		dB
Output power variation over temperature	High Power PA on VDDR	+16 dBm setting Over recommended temperature operating range		±1.5		dB
Spurious emissions and harmonics (Constant amplitude waveforms)						
ETSI						
Spurious emissions (excluding harmonics	30MHz to 1GHz	+14 dBm setting, ETSI restricted bands		< -54		dBm
		+14 dBm setting,ETSI outside restricted bands		< -36		dBm
	1GHz to 12.75GHz (outside ETSI restricted bands)	+14 dBm setting, measured in 1 MHz bandwidth (ETSI)		< -30		dBm
output power	EN300220 V1.3.1 transient margin, 868.3MHz	+14 dBm setting	0			dB
FCC						

ADVANCE INFORMATION

ADVANCE INFORMATION

6.17 782 MHz - 957 MHz Transmit (TX) (continued)

When measured on the BP-CC1402P-8-FE reference design with T_c = 25 °C, V_{DDS} = 3.6 V, f_{RF} = 915 MHz with DC/DC enabled unless otherwise noted. All measurements are performed at the antenna input with a combined RX and TX path. All measurements are performed conducted. Unless otherwise noted, the 14 dBm setting is measured in a single ended RF configurations and the 16dBm is in a differential configuration (using the same PA). The 22dBm PA is used in a differential configuration.

PARAMETER		TEST CONDITIONS	MIN	TYP	MAX	UNIT
Spurious emissions out-of-band, 915MHz	30MHz to 88MHz (within FCC restricted bands)	+14 dBm setting		< -56		dBm
	88MHz to 216MHz (within FCC restricted bands)	+14 dBm setting		< -52		dBm
	216MHz to 960MHz (within FCC restricted bands)	+14 dBm setting		< -50		dBm
	960MHz to 2390MHz and above 2483.5MHz (within FCC restricted band)	+14 dBm setting		<-42		dBm
	1GHz to 12.75GHz (outside FCC restricted bands)	+14 dBm setting		< -40		dBm
Spurious emissions out-of-band, 915MHz (High Power PA)	30MHz to 88MHz (within FCC restricted bands)	+22 dBm setting		< -56		dBm
	88MHz to 216MHz (within FCC restricted bands)	+22 dBm setting		< -52		dBm
	216MHz to 960MHz (within FCC restricted bands)	+22 dBm setting		< -50		dBm
	960MHz to 2390MHz and above 2483.5MHz (within FCC restricted band)	+22 dBm setting		< -42		dBm
	1GHz to 12.75GHz (outside FCC restricted bands)	+22 dBm setting		< -40		dBm

Copyright © 2026 Texas Instruments Incorporated

6.17 782 MHz - 957 MHz Transmit (TX) (continued)

When measured on the BP-CC1402P-8-FE reference design with T_c = 25 °C, V_{DDS} = 3.6 V, f_{RF} = 915 MHz with DC/DC enabled unless otherwise noted. All measurements are performed at the antenna input with a combined RX and TX path. All measurements are performed conducted. Unless otherwise noted, the 14 dBm setting is measured in a single ended RF configurations and the 16dBm is in a differential configuration (using the same PA). The 22dBm PA is used in a differential configuration.

PARAMETER		TEST CONDITIONS	MIN	TYP	MAX	UNIT
ARIB						
Spurious emissions out-of-band, 920.6/928MHz	Below 710MHz (ARIB T-108)	+13 dBm setting		< -36		dBm
	710MHz to 900MHz (ARIB T-108)	+13 dBm setting		< -55		dBm
	900MHz to 915MHz (ARIB T-108)	+13 dBm setting		< -55		dBm
	930MHz to 1000MHz (ARIB T-108)	+13 dBm setting		< -55		dBm
	1000MHz to 1215MHz (ARIB T-108)	+13 dBm setting		< -45		dBm
	Above 1215MHz (ARIB T-108)	+13 dBm setting		< -30		dBm
Spurious emission, Band edge	920.6MHz, 928MHz. (ARIB T-108)	+13 dBm setting		< -36		dBm
Harmonics (High Efficiency PA)						
Harmonics (High Efficiency PA)	Second harmonic	+14dBm setting, 868 MHz		< -30		dBm
	Second harmonic	+14dBm setting, 915 MHz		< -30		dBm
	Third harmonic	+14dBm setting, 868 MHz		< -30		dBm
	Third harmonic	+14dBm setting, 915 MHz		< -42		dBm
	Fourth harmonic	+14dBm setting, 868 MHz		< -30		dBm
	Fourth harmonic	+14dBm setting, 915 MHz		< -42		dBm
	Fifth harmonic	+14dBm setting, 868 MHz		< -30		dBm
	Fifth harmonic	+14dBm setting, 915 MHz		< -42		dBm
Harmonics (High Power PA)	Second harmonic	+22 dBm setting, 868 MHz		< -30		dBm
		+22 dBm setting, 915 MHz		< -30		
	Third harmonic	+22 dBm setting, 868 MHz		< -30		dBm
		+22 dBm setting, 915 MHz		< -42		
	Fourth harmonic	+22 dBm setting, 868 MHz		< -30		dBm
		+22 dBm setting, 915 MHz		< -30		
	Fifth harmonic	+22 dBm setting, 868 MHz		< -30		dBm
		+22 dBm setting, 915 MHz		< -42		
Modulation quality. RMS frequency deviation error	50kbps, h=0.5, 866.6MHz	14dBm setting			30	%
Modulation quality. Maximum zero crossing offset					12.5	%
Adjacent channel power rejection, High Power PA	Adjacent channel. 10kbps, h=1.0, 926.2MHz	Max setting, channel spacing = 50 kHz, offset frequency = 30 kHz, integration BW = 15 kHz			-25	dBc
Alternate channel power rejection, High Power PA	Alternate channel. 10kbps, h=1.0, 926.2MHz	Max setting, channel spacing = 50 kHz, offset frequency = 60 kHz, integration BW = 15 kHz			-35	dBc

6.18 RF PLL Phase Noise and Spurious

When Measured on the BP-CC1402P-8-FE reference design with T_c = 25 °C, V_{DDS} = 3.6 V. All measurements are performed at the antenna input with a combined RX and TX path.
All measurements are performed conducted. All measurements are using 250 byte PSDU < 10% PER unless otherwise noted.

PARAMETER	TEST CONDITIONS	MIN	TYP	MAX	UNIT
782 MHz - 957 MHz - High data rate mode					

ADVANCE INFORMATION

When Measured on the BP-CC1402P-8-FE reference design with T_c = 25 °C, V_{DDS} = 3.6 V. All measurements are performed at the antenna input with a combined RX and TX path.
All measurements are performed conducted. All measurements are using 250 byte PSDU < 10% PER unless otherwise noted.

PARAMETER	TEST CONDITIONS	MIN	TYP	MAX	UNIT
Phase noise in the 868- and 915-MHz bands (General purpose, wideband settings)	±10 kHz offset		–86		dBc/Hz
	±100 kHz offset		–106		dBc/Hz
	±200 kHz offset		–110		dBc/Hz
	±400 kHz offset		–116		dBc/Hz
	±1000 kHz offset		–121		dBc/Hz
	±2000 kHz offset		–127		dBc/Hz
	±10000 kHz offset		–141		dBc/Hz

ADVANCE INFORMATION

Copyright © 2026 Texas Instruments Incorporated

7 Detailed Description

The RF core is a highly flexible and future-proof radio module that contains a 32-bit processor that interfaces the analog RF and base-band circuitry, handles data to and from the system CPU side, and assembles the information bits in a given packet structure. The RF core offers a high-level, command-based API through the SPI interface to the host CPU where configurations and data are passed through.

The RF core can autonomously handle the time-critical aspects of the radio protocols, which reduces power and leaves more resources for the user application. Several signals are also available to control external circuitry, such as RF switches or range extenders autonomously.

The various physical layer radio formats are partly built as a software-defined radio where the radio behavior is delivered in the form of firmware patches. This allows the radio platform to be updated for support of future versions of standards, even with over-the-air (OTA) updates while still using the same silicon.

7.1 Radio (RF Core)

The low-power RF Core (LRF) implements a high-performance and highly flexible RF subsystem containing RF and baseband circuitry in addition to a software-defined digital radio (LRFD). LRFD provides a high-level, command-based API to a host CPU and handles all of the timing-critical and low-level details of many different radio PHYs. Several signals are also available to control external circuitry, such as RF switches or range extenders, autonomously. The modem is highly configurable and has the flexibility to support future standards. It is not programmable by customers but is instead loaded with precompiled images provided in the radio driver in the SimpleLink™ software development kit (SDK). This mechanism allows the radio platform to be updated for support of future versions of standards with over-the-air (OTA) updates while still using the same silicon. LRFD stores the code images in the RF SRAM and does not make use of any ROM memory; thus, image loading from flash only occurs once after boot, and no patching is required when exiting power modes.

ADVANCE INFORMATION

ADVANCE INFORMATION

7.2 Memory

Nonvolatile (Flash) memory provides storage for RF configurations and is used to store factory calibration data. The flash memory is in-system programmable and erasable.

The ultra-low leakage system static RAM (SRAM) is used by the transciever for both storage of data and execution of code. Retention of SRAM contents in Standby power mode is enabled by default and included in Standby mode power consumption numbers.

The onboard boot ROM contains a serial (SPI and UART) bootloader that can be used for inline production and/or infield programming of the device.

7.3 Battery and Temperature Monitor

A combined temperature and battery voltage monitor is available in the CC1402P device. The battery and temperature monitor allows an application to continuously monitor on-chip temperature and supply voltage and respond to changes in environmental conditions as needed. The module contains window comparators to interrupt the system CPU when temperature or supply voltage go outside defined windows. These events can also be used to wake up the device from Standby mode through the Always-On (AON) event fabric.

Copyright © 2026 Texas Instruments Incorporated

7.4 Proprietary Radio Form

The CC1402P radio supports a wide range of modulation formats, using a set of hardware accelerators with combined modem firmware that covers a wide array of standards and proprietary modulation formats.

Feature Support gives a simplified overview of features of the various radio formats available in ROM. Other radio formats may be available in the form of radio firmware patches or programs through the Software Development Kit (SDK) and may combine features in a different manner, as well as add other features.

Table 7-1. Feature Support

FEATURE	2/4-(G)FSK MODEM (ALL devices)	O-QPSK MODEM (CC1404P/07P)	OFDM MODEM (CC1407P)	SimpleLink™ Long Range (All devices)
Programmable preamble, sync word, and CRC	Yes	Yes	Fixed	Fixed
Programmable receive bandwidth	Yes	Yes	No	Yes
Data / Symbol rate(3)	≤ 1000kbps (2 (G)FSK)) ≤ 1200kbps (4 (G)FSK)) ≤ 32.768kbps (OOK)	≤ 100ksps	12.5kbps to 2400kbps	≤ 20ksps
Modulation format	2-(G)FSK, 4-(G)FSK, OOK	O-QPSK	OFDM	2-(G)FSK
Supported standards	SUN FSK, Wi-SUN	SUN O-QPSK	SUN OFDM, Wi-SUN	
Dual Sync Word	Yes	No	No	No
Carrier Sense(1)(2)	Yes	Yes	Yes	No
Preamble Detection(2)	Yes	Yes	No	No
Data Whitening	Yes	Yes	Yes	Yes
Digital RSSI	Yes	Yes	Yes	Yes
CRC filtering	Yes	Yes	Yes	Yes
Direct-sequence spread spectrum (DSSS)	No	No	No	1:2 1:4 1:8
Forward error correction (FEC)	Yes	Yes	Yes	Yes

(1) Carrier Sense can be used to implement HW-controlled listen-before-talk (LBT) and Clear Channel Assessment (CCA) for compliance with such requirements in regulatory standards.
(2) Carrier Sense and Preamble Detection can be used to implement sniff modes where the radio is duty-cycled to save power.
(3) Data rates are only indicative. Data rates outside this range may also be supported. For some specific combinations of settings, a smaller range might be supported.

ADVANCE INFORMATION

ADVANCE INFORMATION

7.5 Power Management

To minimize power consumption, the CC1402P supports a number of power modes and power management features (see Table 7-2).

Table 7-2. Power Modes

MODE	POWER MODES				RESET PIN HELD
	ACTIVE	IDLE	STANDBY	SHUTDOWN	
SRAM	On	On	Retention	Off	Off
Radio	Available	Available	Off	Off	Off
Supply System	On	On	Duty Cycled	Off	Off
Register and CPU retention	Full	Full	Partial	No	No
SRAM retention	Full	Full	Full	No	No
48MHz high-speed clock	HFOSC	HFOSC	Off	Off	Off
32kHz low-speed clock	LFOSC	LFOSC	LFOSC	Off	Off
Wake-up on RTC	Available	Available	Available	Off	Off
Wake-up on pin edge	Available	Available	Available	Available	Off
Wake-up on reset pin	On	On	On	On	On
Brownout detector (BOD)	On	On	Duty Cycled	Off	Off
Power-on reset (POR)	On	On	On	On	On
Watchdog timer (WDT)	Available	Available	Paused	Off	Off

In **Active** mode, the transceiver system CPU is actively executing code. Active mode provides normal operation of all of the peripherals and radio subsystem.

In **Standby** mode, the transceiver is waiting for an external wake-up event or an RTC event to bring the device back to active mode.

In **Shutdown** mode, the device is entirely turned off, and the I/Os are latched with the value they had before entering shutdown mode. A change of state on any I/O pin defined as a *wake from shutdown pin* wakes up the device and functions as a reset trigger.

Copyright © 2026 Texas Instruments Incorporated

8 Application, Implementation, and Layout

Note

Information in the following applications sections is not part of the TI component specification, and TI does not warrant its accuracy or completeness. TI's customers are responsible for determining suitability of components for their purposes, as well as validating and testing their design implementation to confirm system functionality.

For general design guidelines and hardware configuration guidelines, refer to CC13xx/CC26xx Hardware Configuration and PCB Design Considerations Application Report.

8.1 Reference Designs

The following reference designs should be followed closely when implementing designs using the CC1402P device.

Special attention must be paid to RF component placement, decoupling capacitors, and DCDC regulator components, as well as ground connections for all of these. For optimum RF performance, especially when using the high-power PA, it is important to accurately follow the reference design with respect to component values and layout. Failure to do so may lead to reduced RF performance due to balun mismatch. The amplitude and phase balance through the balun must be <1 dB and <6 degrees, respectively. PCB stack-up is also critical for proper operation. The C140xP EVMs and characterization boards are using a finished thickness between the top layer (RF signals) and layer 2 (ground plane) of 175 µm.

The CC1402P has a very flexible RF front-end design that enables many different optimzations. To enable customers to quickly evaluate the different options we have created different reference designs.

Integrated balun devices can be used, the following balun is recommended for CC1402P high-power PA output:

- Murata LFB21892MBGGF964

8.1.1 Highest Performance

The highest performance design or Full Entitlement (FE) design covers the broadest customer requirements, including showcasing the new integrated ultra-LNA (uLNA) that enables the integration of SAW filters without the drawback of losing 2-3dB of receive sensitivity.

- Longest Range (+22dBm transmit)
- Best sensitivity (4dB improvement using uLNA)
- Most robust receive in presence of 5G

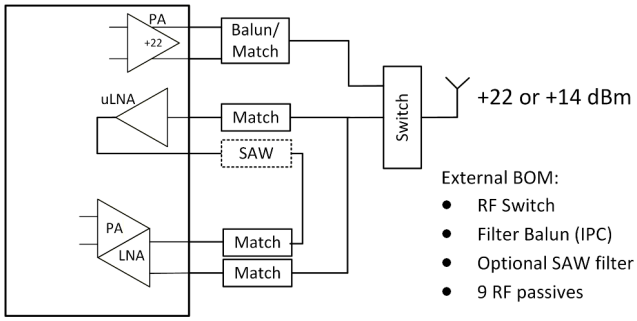

Figure 8-1. Full Entitlement reference design block diagram

BP-CC14xP-x-FE design files

The BP-CC140xP-x-FE reference design provides schematic, layout, and production files for the characterization board used for deriving the performance number found in this document.

ADVANCE INFORMATION

ADVANCE INFORMATION

8.1.2 Balanced Performance

This design showcases a balanced performance configuration. The differential recieve has very strong perforamnce in the presense of 5G base stations where SAW fillters may not be needed in certain usecases. The balanced performance design also utilizes the full capabilties of the high efficiency RF amplier achieving the full 16dBm of transmit power available.

- Robust receive in presence of 5G
- Low current transmit (+16dBm transmit power)
- Low external Bill of Materials (eBOM)

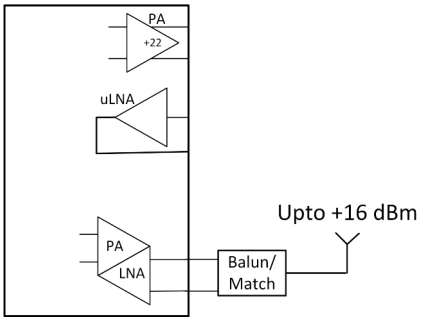

Figure 8-2. Differential high efficiency reference design

8.1.3 Lowest external Bill of Material (eBOM)

This design showcases the lowest practical component count design that the transciever supports. The complete external bill-of-materials (eBOM) totals approximately: 12 RF passives, decoupling capacitors and an optional DCDC inductor.

- Lowest eBOM (+14dBm TX)
- Lowest transmit current for application targeting 10dBm output power.
- Lowest receive current (uLNA is disabled)

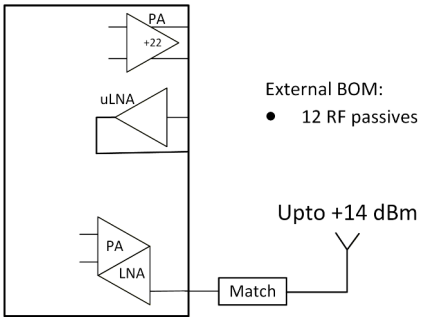

Figure 8-3. Lowest Cost External BOM reference design

8.1.4 Long Range low external Bill of Material

This design delivers the minimum achievable external eBOM for a +22 dBm Sub-GHz solution by eliminating the external RF switch through a switchless dual-PA architecture. The result is a cost-optimized, long-range reference design with no sacrifice in transmit performance.

- +22 dBm maximum TX power with a switchless architecture
- Robust in the presence of 5G base stations
- Long-range capability at minimum BOM cost — no performance trade-off required

Copyright © 2026 Texas Instruments Incorporated

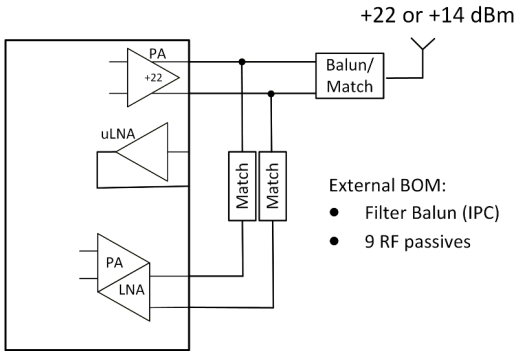

Figure 8-4. Switchless dual-PA reference design

8.1.5 Antenna Kit for LaunchPad

Sub-1 GHz and 2.4 GHz Antenna Kit for LaunchPad™ Development Kit and SensorTag

The antenna kit allows real-life testing to identify the optimal antenna for your application. The antenna kit includes 16 antennas for frequencies from 169MHz to 2.4GHz, including:

- PCB antennas
- Helical antennas
- Chip antennas
- Dual-band antennas for 868MHz and 915MHz combined with 2.4GHz

The antenna kit includes a JSC cable to connect to the Wireless MCU LaunchPad Development Kits and SensorTags.

ADVANCE INFORMATION

ADVANCE INFORMATION

9 Device and Documentation Support

TI offers an extensive line of tools and software that support development. The tools to evaluate the performance of the device, generate code, and develop solutions are listed below.

9.1 Device Nomenclature

To designate the stages in the product development cycle, TI assigns prefixes to all part numbers and/or date-codes. Each device has one of three prefixes/identifications: X, P, or null (no prefix) (for example, XCC1402P is in preview; therefore, an X prefix/identification is assigned).

Device development evolutionary flow:

X Experimental device that is not necessarily representative of the final device's electrical specifications and may not use production assembly flow.

P Prototype device that is not necessarily the final silicon die and may not necessarily meet final electrical specifications.

null Production version of the silicon die that is fully qualified.

Production devices have been characterized fully, and the quality and reliability of the devices have been demonstrated fully. TI's standard warranty applies.

Predictions show that prototype devices (X or P) have a greater failure rate than the standard production devices. Texas Instruments recommends that these devices not be used in any production system because their expected end-use failure rate is still undefined. Only qualified production devices are to be used.

TI device nomenclature also includes a suffix with the device family name. This suffix indicates the package type (for example, *RGZ*).

For orderable part numbers of *CC1402P* devices in the RKP (5mm × 5mm) package type, see the *Package Option Addendum* of this document, the Device Information in Section 3, the TI website (www.ti.com), or contact your TI sales representative.

9.2 Tools and Software

The CC1402P device is supported by a variety of software and hardware development tools.

Software

The SDK includes a comprehensive software package for the CC1402P device, including the following protocol stacks:

- TRX PropRF—CC140x host drivers and proprietary RF stack
- TI 15.4-Stack—an IEEE 802.15.4-based star networking solution for Sub-1GHz
- Wi-SUN—TI Wi-SUN FAN Stack

Development Tools

Code Composer Studio™ Integrated Development Environment (IDE)

Code Composer Studio is an integrated development environment (IDE) that supports TI's Microcontroller and Embedded Processors portfolio. Code Composer Studio comprises a suite of tools used to develop and debug embedded applications. It includes an optimizing C/C++ compiler, source code editor, project build environment, debugger, profiler, and many other features. The intuitive IDE provides a single user interface that takes you through each step of the application development flow. Familiar tools and interfaces allow users to get started faster than ever before. Code Composer Studio combines the advantages of the Eclipse® software framework with advanced embedded debug capabilities from TI, resulting in a compelling, feature-rich development environment for embedded developers.

Code Composer Studio is free of charge when used in conjunction with the XDS debuggers included on a LaunchPad + BoosterPack combination Development Kit.

Copyright © 2026 Texas Instruments Incorporated

Code Composer Studio™ Cloud IDE

Code Composer Studio (CCS) Cloud is a web-based IDE that allows you to create, edit, and build CCS and Energia™ projects. After you have successfully built your project, you can download and run on your connected LaunchPad. Basic debugging, including features like setting breakpoints and viewing variable values, is now supported with CCS Cloud.

IAR Embedded Workbench® for Arm®

IAR Embedded Workbench® is a set of development tools for building and debugging embedded system applications using assembler, C, and C++. It provides a completely integrated development environment that includes a project manager, editor, and build tools. IAR supports all SimpleLink Wireless MCUs. It offers broad debugger support, including XDS110, IAR I-jet™, and Segger J-Link™. A real-time object viewer plugin is available for TI-RTOS, part of the SimpleLink SDK. IAR is also supported out of the box on most software examples provided as part of the SimpleLink SDK.

A 30-day evaluation or a 32KB size-limited version is available through iar.com.

SmartRF™ Studio

SmartRF™ Studio is a Windows® application that can be used to evaluate and configure SimpleLink Wireless MCUs from Texas Instruments. The application helps designers of RF systems to easily evaluate the radio at an early stage in the design process. It is especially useful for generating configuration register values and practical testing and debugging of the RF system. SmartRF Studio can be used either as a standalone application or with applicable evaluation boards or debug probes for the RF device. Features of the SmartRF Studio include:

- Link tests—send and receive packets between nodes
- Antenna and radiation tests—set the radio in continuous wave TX and RX states
- Export radio configuration code for use with the TI SimpleLink SDK RF driver
- Custom GPIO configuration for signaling and control of external switches

9.3 Receiving Notification of Documentation Updates

To receive notification of documentation updates, navigate to the device product folder on ti.com. Click on *Notifications* to register and receive a weekly digest of any product information that has changed. For change details, review the revision history included in any revised document.

9.4 Documentation Support

To receive notification of documentation updates on data sheets, errata, application notes and similar, navigate to the device product folder on . In the upper right corner, click on *Alert me* to register and receive a weekly digest of any product information that has changed. For change details, review the revision history included in any revised document.

The current documentation that describes the MCU, related peripherals, and other technical collateral is listed as follows.

TI Resource Explorer

TI Resource Explorer	Software examples, libraries, executables, and documentation are available for your device and development board.

Errata—The silicon errata describes the known exceptions to the functional specifications for each silicon revision of the device and description on how to recognize a device revision.

Application Reports—All application reports for the CC1402P device are found on the device product folder at

SDK Documentation—The CC1402P SimpleLink™ Wireless SDK documentation is included in the SDK as part of the software documentation.

9.5 Trademarks

SimpleLink™, BoosterPack™, SmartRF™, and Code Composer Studio™ are trademarks of Texas Instruments.

ADVANCE INFORMATION

I-jet™ is a trademark of IAR Systems AB.
J-Link™ is a trademark of SEGGER Microcontroller Systeme GmbH.
Wi-SUN® is a registered trademark of Wi-SUN Alliance.
Eclipse® is a registered trademark of Eclipse Foundation.
IAR Embedded Workbench® is a registered trademark of IAR Systems AB.
Windows® is a registered trademark of Microsoft Corporation.
All trademarks are the property of their respective owners.

9.6 Electrostatic Discharge Caution

This integrated circuit can be damaged by ESD. Texas Instruments recommends that all integrated circuits be handled with appropriate precautions. Failure to observe proper handling and installation procedures can cause damage.

ESD damage can range from subtle performance degradation to complete device failure. Precision integrated circuits may be more susceptible to damage because very small parametric changes could cause the device not to meet its published specifications.

9.7 Export Control Notice

Recipient agrees to not knowingly export or re-export, directly or indirectly, any product or technical data (as defined by the U.S., EU, and other Export Administration Regulations) including software, or any controlled product restricted by other applicable national regulations, received from disclosing party under nondisclosure obligations (if any), or any direct product of such technology, to any destination to which such export or re-export is restricted or prohibited by U.S. or other applicable laws, without obtaining prior authorization from U.S. Department of Commerce and other competent Government authorities to the extent required by those laws.

9.8 Glossary

TI Glossary This glossary lists and explains terms, acronyms, and definitions.

10 Revision History

DATE	REVISION	NOTES
September 2026	*	Initial Release

11 Mechanical, Packaging, and Orderable Information

The following pages include mechanical, packaging, and orderable information. This information is the most current data available for the designated devices. This data is subject to change without notice and revision of this document. For browser-based versions of this data sheet, refer to the left-hand navigation.

11.1 Packaging Information

Copyright © 2026 Texas Instruments Incorporated

PACKAGING INFORMATION

Orderable part number	Status (1)	Material type (2)	Package | Pins	Package qty | Carrier	RoHS (3)	Lead finish/ Ball material (4)	MSL rating/ Peak reflow (5)	Op temp (°C)	Part marking (6)
XCC1402PT1RKPR	Active	Preproduction	VQFN (RKP) | 40	5000 | LARGE T&R	-	Call TI	Call TI	-40 to 105	

(1) **Status:** For more details on status, see our product life cycle.

(2) **Material type:** When designated, preproduction parts are prototypes/experimental devices, and are not yet approved or released for full production. Testing and final process, including without limitation quality assurance, reliability performance testing, and/or process qualification, may not yet be complete, and this item is subject to further changes or possible discontinuation. If available for ordering, purchases will be subject to an additional waiver at checkout, and are intended for early internal evaluation purposes only. These items are sold without warranties of any kind.

(3) **RoHS values:** Yes, No, RoHS Exempt. See the TI RoHS Statement for additional information and value definition.

(4) **Lead finish/Ball material:** Parts may have multiple material finish options. Finish options are separated by a vertical ruled line. Lead finish/Ball material values may wrap to two lines if the finish value exceeds the maximum column width.

(5) **MSL rating/Peak reflow:** The moisture sensitivity level ratings and peak solder (reflow) temperatures. In the event that a part has multiple moisture sensitivity ratings, only the lowest level per JEDEC standards is shown. Refer to the shipping label for the actual reflow temperature that will be used to mount the part to the printed circuit board.

(6) **Part marking:** There may be an additional marking, which relates to the logo, the lot trace code information, or the environmental category of the part.

Multiple part markings will be inside parentheses. Only one part marking contained in parentheses and separated by a "~" will appear on a part. If a line is indented then it is a continuation of the previous line and the two combined represent the entire part marking for that device.

Important Information and Disclaimer: The information provided on this page represents TI's knowledge and belief as of the date that it is provided. TI bases its knowledge and belief on information provided by third parties, and makes no representation or warranty as to the accuracy of such information. Efforts are underway to better integrate information from third parties. TI has taken and continues to take reasonable steps to provide representative and accurate information but may not have conducted destructive testing or chemical analysis on incoming materials and chemicals. TI and TI suppliers consider certain information to be proprietary, and thus CAS numbers and other limited information may not be available for release.

In no event shall TI's liability arising out of such information exceed the total purchase price of the TI part(s) at issue in this document sold by TI to Customer on an annual basis.

GENERIC PACKAGE VIEW

RKP 40

VQFN - 1 mm max height

5 x 5, 0.4 mm pitch

PLASTIC QUAD FLATPACK - NO LEAD

This image is a representation of the package family, actual package may vary.
Refer to the product data sheet for package details.

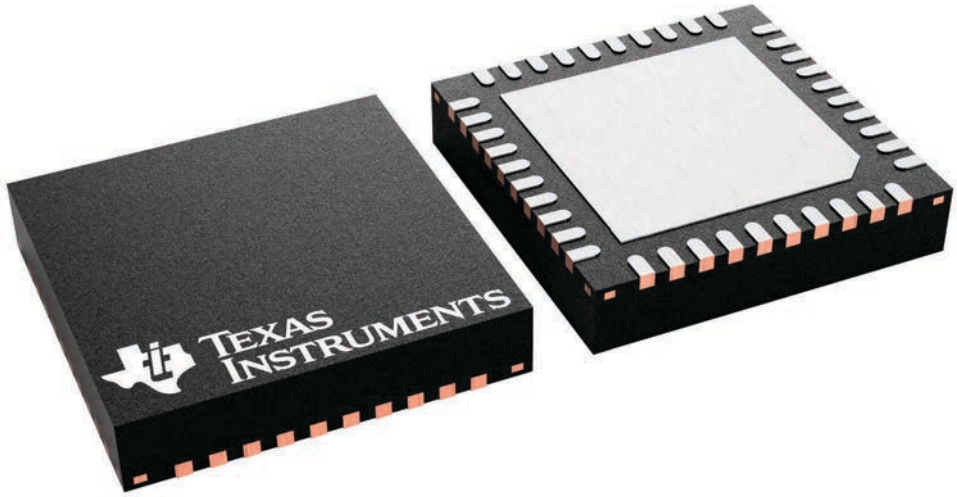

4229305/A

IMPORTANT NOTICE AND DISCLAIMER

TI PROVIDES TECHNICAL AND RELIABILITY DATA (INCLUDING DATASHEETS), DESIGN RESOURCES (INCLUDING REFERENCE DESIGNS), APPLICATION OR OTHER DESIGN ADVICE, WEB TOOLS, SAFETY INFORMATION, AND OTHER RESOURCES “AS IS” AND WITH ALL FAULTS, AND DISCLAIMS ALL WARRANTIES, EXPRESS AND IMPLIED, INCLUDING WITHOUT LIMITATION ANY IMPLIED WARRANTIES OF MERCHANTABILITY, FITNESS FOR A PARTICULAR PURPOSE OR NON-INFRINGEMENT OF THIRD PARTY INTELLECTUAL PROPERTY RIGHTS.

These resources are intended for skilled developers designing with TI products. You are solely responsible for (1) selecting the appropriate TI products for your application, (2) designing, validating and testing your application, and (3) ensuring your application meets applicable standards, and any other safety, security, regulatory or other requirements.

These resources are subject to change without notice. TI grants you permission to use these resources only for development of an application that uses the TI products described in the resource. Other reproduction and display of these resources is prohibited. No license is granted to any other TI intellectual property right or to any third party intellectual property right. TI disclaims responsibility for, and you fully indemnify TI and its representatives against any claims, damages, costs, losses, and liabilities arising out of your use of these resources.

TI’s products are provided subject to TI’s Terms of Sale, TI’s General Quality Guidelines, or other applicable terms available either on ti.com or provided in conjunction with such TI products. TI’s provision of these resources does not expand or otherwise alter TI’s applicable warranties or warranty disclaimers for TI products. Unless TI explicitly designates a product as custom or customer-specified, TI products are standard, catalog, general purpose devices.

TI objects to and rejects any additional or different terms you may propose.

Copyright © 2026, Texas Instruments Incorporated

Last updated 10/2025