Fully Integrated Dual-Input Switch-Mode One-Cell Li-Ion Charger with Full USB Compliance and USB-OTG Support

Check for Samples: bq24140

FEATURES

- **High-Efficiency Mini-USB/AC Battery Charger for Single-Cell Li-Ion and Li-Polymer Battery Packs**
- **Charge Battery and Provide USB-OTG Support at the Same Time**
- **High-Accuracy Voltage and Current Regulation**
  - **Input Current Regulation Accuracy: ±5% (100mA, 500mA)**
  - **Charge Voltage Regulation Accuracy: ±0.5% (25°C), ±1% (0-125°C)**
  - **Charge Current Regulation Accuracy: ±5%**
- **Boost Mode Operation for USB OTG:**
  - **Input Voltage Range (from Battery): 2.3V to 4.5V**
  - **Output for VBUS: 5.05V/500 mA**
- **Input Voltage Based Dynamic Power Management Provides Protection Against Current Limited Adapters**
- **Bad Adaptor Detection and Rejection**
- **Safety Limit Register for Added Security by Limiting Maximum Charge Voltage and Maximum Charge Current**
- **20-V Absolute Maximum Input Voltage Rating**
- **9.0-V Maximum Operating Input Voltage**
- **Charge Faster than Linear Chargers**
- **Built-in Input Current Sensing and Limiting**
- **Integrated Power FETs for up to 1.5-A Charge Rate**
- **Programmable Charge Parameters Through I²C Interface (up to 3.4 Mbps):**
  - **Input Current**
  - **Fast-Charge/Termination Current**
  - **Charge Voltage (3.5-4.44V)**
  - **Safety Timer with Reset Control**
  - **Safety Timer with Reset Control**
  - **Termination Enable**
- **Synchronous Fixed-Frequency PWM Controller Operating at 3 MHz With 0% to 99.5% Duty Cycle**
- **Automatic High Impedance Mode for Low Power Consumption**
- **Robust Protection**
  - **Reverse Leakage Protection Prevents Battery Drainage**
  - **Thermal Regulation and Protection**
  - **Input/Output Over Voltage Protection**
- **Status Output for Charging and Faults**
- **USB Friendly Boot-Up Sequence**
- **2.35 × 2.65 mm 30-pin WCSP Package**

APPLICATIONS

- **Mobile Phones and Smart Phones**
- **MP3 Players**
- **Handheld Devices**

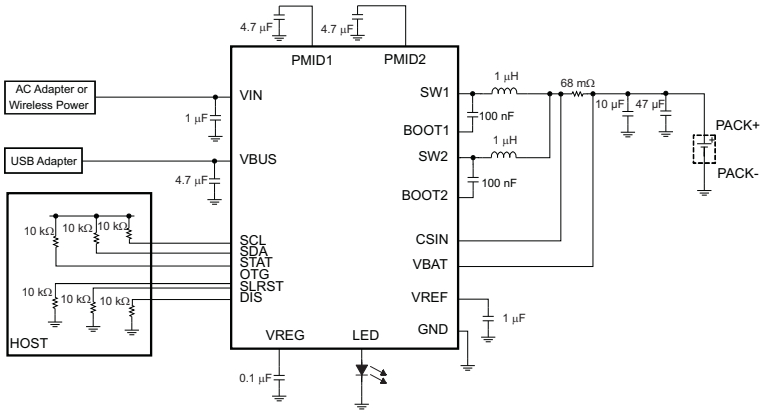

Please be aware that an important notice concerning availability, standard warranty, and use in critical applications of Texas Instruments semiconductor products and disclaimers thereto appears at the end of this data sheet.

PRODUCTION DATA information is current as of publication date. Products conform to specifications per the terms of the Texas Instruments standard warranty. Production processing does not necessarily include testing of all parameters.

Copyright © 2011, Texas Instruments Incorporated

These devices have limited built-in ESD protection. The leads should be shorted together or the device placed in conductive foam during storage or handling to prevent electrostatic damage to the MOS gates.

DESCRIPTION

The bq24140 is a compact, flexible, high-efficiency, USB-friendly switch-mode charge management device for single-cell Li-ion and Li-polymer batteries used in a wide range of portable applications. The charge parameters can be programmed through an I^2C interface. The IC integrates two synchronous PWM chargers, power MOSFETs, input current sensing, high-accuracy current and voltage regulation, and charge termination, into a small WCSP package.

The IC charges the battery in three phases: conditioning, constant current and constant voltage. The input current is automatically limited to the value set by the host. Charge is terminated based on user-selectable minimum current level. A safety timer with reset control provides a safety backup for I^2C interface. During normal operation, the IC automatically restarts the charge cycle if the battery voltage falls below an internal threshold and automatically enters sleep mode or high impedance mode when the input supply is removed. The charge status can be reported to the host using the I^2C interface. During the charging process, the IC monitors its junction temperature (T_J) and reduces the charge current once T_J increases to 125°C typical. To support USB OTG device, the IC can provide VBUS (5.05V typical) by boosting the battery voltage. The IC is available in 30-pin WCSP package.

DEVICE INFORMATION

PIN OUT (TOP VIEW)

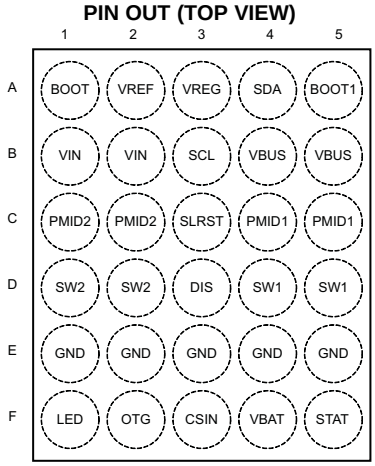

PIN FUNCTIONS

PIN		I/O	DESCRIPTION
NAME	NO.		
BOOT	A1	O	Boot-strapped capacitor for the high-side MOSFET gate driver. Connect a 100nF ceramic capacitor (voltage rating above 10V) from BOOT pin to SW2 pin.
VREF	A2	O	Internal bias regulator voltage. Connect a 1µF ceramic capacitor from this output to PGND.
VREG	A3	O	Voltage regulator. 2.5V with 10mA current capability. Connect a 0.1µF ceramic capacitor to ground
SDA	A4	I/O	I2C interface data. Connect a 10-kΩ pull-up resistor to 1.8V rail.
BOOT1	A5	O	Boot-strapped capacitor for the high-side MOSFET gate driver. Connect a 100nF ceramic capacitor (voltage rating above 10V) from BOOT1 pin to SW1 pin.
VIN	B1 – B2	I	Charger input voltage. Bypass it with a 1µF ceramic capacitor from VIN to GND.
SCL	B3	I	I^2C interface clock. Connect a 10-kΩ pull-up resistor to 1.8V rail.
VBUS	B4 – B5	I/O	Charger input voltage. Bypass it with a 4.7µF ceramic capacitor from VBUS to GND. This pin also provides the output of the boost converter when in Boost Mode.
PMID2	C1 – C2	O	Connection point between reverse blocking FET and high-side switching FET. Bypass it with a minimum of 3.3µF capacitor from PMID2 to GND.

Copyright © 2011, Texas Instruments Incorporated

PIN FUNCTIONS (continued)

PIN		I/O	DESCRIPTION
NAME	NO.		
SLRST	C3	I	Safety limit register control. When SLRST = 0, all the safety limit values are reset to default values, regardless of the write actions to the safety limits registers. When SLRST = 1, the host can program the safety limits register until any write action to other registers locks the programmed safety limits.
PMID1	C4 – C5	O	Connection point between reverse blocking FET and high-side switching FET. Bypass it with a minimum of 3.3µF capacitor from PMID1 to GND.
SW2	D1 – D2	O	Internal switch to output inductor connection.
DIS	D3	I	Charge disable control pin. DIS=0, charge is enabled. DIS=1, charge is disabled. VIN and VBUS pins are high impedance to PGND. In 15min mode, DIS=1 will reset the 15min timer; while in 32s mode, DIS=1 will NOT reset the 32-second timer.
SW1	D4 – D5	O	Internal switch to output inductor connection.
GND	E1 – E5		Ground pins.
LED	F1	O	High side LED driver. Current, on and off times can be programmed through I2C to select different modes.
OTG	F2	I	Boost mode enable control and VBUS input current limiting selection pin. When OTG is in active status per the control register, VBUS converter will be forced to operate in boost mode. It has higher priority over I^2C control and can be disabled through control register. The polarity of OTG active status can also be controlled. At POR, the OTG control register is ignored and the OTG pin is used as the input current limiting selection pin for VBUS converter. When OTG=High, IIN_LIMIT=500mA and when OTG=Low, IIN_LIMIT=100mA.
CSIN	F3	I	Charge current-sense input. Battery current is sensed via the voltage drop across an external sense resistor. A 0.1µF ceramic capacitor to GND is required.
VBAT	F4	I	Battery voltage and current sense input. Bypass it with a ceramic capacitor (minimum 0.1µF) to GND if there are long inductive leads to battery.
STAT	F5	O	Charge status pin. Pull low when charge in progress. Open drain for other conditions. During faults, a 128µS pulse is sent out. STAT pin can be disabled by the EN_STAT bit in control register. STAT can be used to drive a LED or communicate with a host processor.

ABSOLUTE MAXIMUM RATINGS(1)

over operating free-air temperature range (unless otherwise noted)

			VALUE		UNIT
			MIN	MAX	
	Supply voltage range (with respect to GND)	VBUS, VIN	–2	20	V
	Input voltage range (with respect to and GND)	SCL, SDA, OTG, CSIN, VREG, VBAT, SLRST, DIS, LED	–0.3	7	V
	Output voltage range (with respect to and GND)	PMID1, PMID2, STAT	–0.3	20	V
		VREF		6.5	
		BOOT, BOOT1	–0.7	20	
		SW1, SW2	–0.7	12	
	Voltage difference between CSIN and VBAT inputs (VCSIN -VBAT)			±7	V
	Output sink	STAT		10	mA
	Output current (average)	SW1, SW2		1.5(2)	A
T_A	Operating free-air temperature range		–30	+85	°C
T_J	Junction temperature range		–40	+125	°C
T_{stg}	Storage temperature		–45	+150	°C
	ESD Rating(3)	Human body model at all pins	±2000		V
		Machine model	±100		
		Charge device model	±500		

(1) Stresses beyond those listed under absolute maximum ratings may cause permanent damage to the device. These are stress ratings only, and functional operation of the device at these or any other conditions beyond those indicated under recommended operating conditions is not implied. Exposure to absolute-maximum-rated conditions for extended periods may affect device reliability.
(2) Duty cycle for output current should be less than 50% for 10- year life time when output current is above 1.25A
(3) The human body model is a 100-pF capacitor discharged through a 1.5-kΩ resistor into each pin.

Copyright © 2011, Texas Instruments Incorporated

THERMAL INFORMATION

THERMAL METRIC[1]		bq24140 WCSP PACKAGE 30 PINS	UNITS
θ_{JA}	Junction-to-ambient thermal resistance	79.5	°C/W
θ_{JCtop}	Junction-to-case (top) thermal resistance	0.3	
θ_{JB}	Junction-to-board thermal resistance	44.4	
ψ_{JT}	Junction-to-top characterization parameter	0.3	
ψ_{JB}	Junction-to-board characterization parameter	44.4	
θ_{JCbot}	Junction-to-case (bottom) thermal resistance	n/a	

(1) For more information about traditional and new thermal metrics, see the *IC Package Thermal Metrics* application report, SPRA953.

RECOMMENDED OPERATING CONDITIONS

		MIN	NOM	MAX	UNIT
VBUS	Supply voltage	4.0		6[1]	V
VIN	Supply voltage	4.0		9[1]	V
T_J	Operating junction temperature range	–40		125	°C

(1) The inherent switching noise voltage spikes should not exceed the absolute maximum rating on either the BOOT or SW pins. A tight layout minimizes switching noise.

ELECTRICAL CHARACTERISTICS

Circuit of Figure 1, V_{BUS} = 5V, HZ_MODE=0, OPA_MODE=0, CD=0, T_J = –40°C–125°C and T_J = 25°C for typical values

PARAMETER		TEST CONDITIONS	MIN	TYP	MAX	UNIT
INPUT CURRENTS						
I_{VBUS}	VBUS supply current for control	VBUS > V_{MIN}, PWM switching		10		mA
		VBUS > V_{MIN}, PWM NOT switching			5	
		0°C < T_J < 85°C, CD = 1 or HZ_MODE = 1		33	80	µA
I_{VIN}	VIN supply current for control	VIN > V_{MIN}, PWM switching		10		mA
		VIN > V_{MIN}, PWM NOT switching			5	
		0°C < T_J < 85°C, CD = 1 or HZ_MODE = 1, No load on VREG			150	µA
I_{IN_LEAK}	Leakage current from battery to VBUS pin and / or VIN	0°C < T_J < 85°C, V_{VBAT} = 4.2 V, High Impedance mode			5	µA
	Battery discharge current in high impedance mode, (CSIN, VBAT, SW pins)	0°C < T_J < 85°C, V_{VBAT} = 4.2 V, High Impedance mode, SCL,SDA,OTG=0V or 1.8V			23	µA
VOLTAGE REGULATION						
V_{OREG}	Output charge voltage	Operating in voltage regulation, programmable	3.5		4.44	V
	Voltage regulation accuracy	T_A = 25°C	–0.5%		0.5%	
		Over recommended operating temperature	–0.75%		0.75 %	
		4.1 V – 4.35 V range, over recommended operating temperature	–0.6%		0.4%	
CURRENT REGULATION -FAST CHARGE						
$I_{OCHARGE}$	Output charge current	VIN, $V_{LOWV} \le V_{VBAT} < V_{OREG}$, VIN > VSLP, RSNS = 68 mΩ, LOW_CHG=0, Programmable	550		1550	mA
		VBUS, $V_{LOWV} \le V_{VBAT} < V_{OREG}$, VBUS > VSLP, RSNS = 68 mΩ LOW_CHG = 0, Programmable	550		1250	
		$V_{LOWV} \le V_{VBAT} < V_{OREG}$, VBUS > VSLP, RSNS=68 mΩ LOW_CHG=1		325	350	
	Regulation accuracy for charge current across RSNS, $V_{IREG} = I_{OCHARGE} \times R_{SNS}$	37.4 mV ≤ V_{IREG}	-3%		3%	
WEAK BATTERY DETECTION						
V_{LOWV}	Weak battery voltage threshold	Programmable	3.4		3.7	V
	Weak battery voltage accuracy		–5%		5%	

Copyright © 2011, Texas Instruments Incorporated

ELECTRICAL CHARACTERISTICS (continued)

Circuit of Figure 1, V_{BUS} = 5V, HZ_MODE=0, OPA_MODE=0, CD=0, T_J = –40°C–125°C and T_J = 25°C for typical values

PARAMETER		TEST CONDITIONS		MIN	TYP	MAX	UNIT
	Deglitch time for weak battery threshold	Rising voltage, 2-mV over drive, t_{RISE} = 100 ns			30		ms
	Hysteresis for V_{LOWV}	Battery voltage falling			100		mV
DIS, SLRST and OTG PIN LOGIC LEVEL							
V_{IL}	Input low threshold level					0.4	V
V_{IH}	Input high threshold level			1.3			V
CHARGE TERMINATION DETECTION							
I_{TERM}	Termination charge current	V_{VBAT} > V_{OREG}-V_{RCH} , V_{BUS} > V_{SLP}, R_{SNS} = 68 mΩ, Programmable		50		400	mA
	Deglitch time for charge termination	Both rising and falling, 2-mV overdrive, t_{RISE}, t_{FALL} = 100 ns			30		ms
	Regulation accuracy for termination current across R_{SNS} V_{IREG_TERM} = I_{OTERM} × R_{SNS}	3.4 mV ≤ V_{IREG_TERM} ≤ 6.8mV		-35%		35%	
		6.8 mV < V_{IREG_TERM} ≤ 13.6 mV		–12.5%		12.5 %	
		13.6mV < V_{IREG_TERM} ≤ 30 mV		–6%		6%	
BAD ADAPTOR DETECTION							
$V_{IN(MIN)}$	Input voltage lower limit	Bad adaptor detection		3.7	3.8	4.0	V
	Deglitch time for VBUS rising above $V_{IN(MIN)}$	Rising voltage, 2-mV overdrive, t_{RISE} = 100 ns			30		ms
	Hysteresis for $V_{IN(MIN)}$	Input voltage rising		100		200	mV
I_{SHORT}	Current source to GND	During bad adaptor detection		20	30	40	mA
T_{INT}	Detection interval	Input power source detection			2		S
INPUT BASED DYNAMIC POWER MANAGEMENT							
V_{IN_LOW}	The threshold when input based DPM loop kicks in	Charge mode, programmable		4.2		4.76	V
	DPM loop kick-in threshold tolerance			–2%		+2%	
INPUT CURRENT LIMITING							
I_{IN_LIMIT}	Input current limit	I_{IN} = 100mA	T_J = 0°C–125ºC	88	93	98	mA
			T_J = –40ºC–125ºC	86	93	98	
		I_{IN} = 500mA	T_J = 0ºC–125ºC	450	475	500	mA
			T_J = –40ºC–125ºC	440	475	500	
VREF BIAS REGULATOR							
V_{REF}	Internal bias regulator voltage	V_{IN} > V_{REF}, I_{VREF} = 1 mA, C_{VREF} = 1 µF		5.5		6.5	V
	V_{REF} output short current limit				30		mA
BATTERY RECHARGE THRESHOLD							
V_{RCH}	Recharge threshold voltage	Below V_{OREG}		90	120	160	mV
	Deglitch time	V_{VBAT} decreasing below threshold, t_{FALL} = 100 ns, 10-mV overdrive			130		ms
STAT OUTPUT							
V_{OL}	Low-level output saturation voltage, STAT pin	I_O = 10 mA, sink current				0.55	V
	High-level leakage current for STAT	Voltage on STAT pin is 5V				1	µA
LED OUTPUT							
V_{LED_MIN}	Minimum LED operating voltage			2.5			V
I_{LED}	LED current, programmable	ILED1 = L, ILED0 = L			0		mA
		ILED1 = L, ILED0 = H			1.35		
		ILED1 = H, ILED0 = L			2.7		
		ILED1 = H, ILED0 = H			5.4		
	LED current accuracy			–20%		+20%	
V_{DO}	Drop-out voltage of LED	VBAT = 2.5 V			100	200	mV
T_{ON}	Turn on time for current source (10%–90%)				100		µs
T_{OFF}	Turn off time for current source (90%–10%)				100		µs
I^2C BUS LOGIC LEVELS AND TIMING CHARTERISTICS							

Copyright © 2011, Texas Instruments Incorporated

ELECTRICAL CHARACTERISTICS (continued)

Circuit of Figure 1, V_{BUS} = 5V, HZ_MODE=0, OPA_MODE=0, CD=0, T_J = –40°C–125°C and T_J = 25°C for typical values

PARAMETER		TEST CONDITIONS	MIN	TYP	MAX	UNIT
V_{OL}	Output low threshold level	I_O = 10 mA, sink current		0.4		V
V_{IL}	Input low threshold level	$V_{(pull-up)}$ = 1.8 V, SDA and SCL		0.4		V
V_{IH}	Input high threshold level	$V_{(pull-up)}$ = 1.8 V, SDA and SCL	1.2			V
$I_{(bias)}$	Input bias current	$V_{(pull-up)}$ = 1.8 V, SDA and SCL		1		µA
f_{SCL}	SCL clock frequency			3.4		MHz
BATTERY DETECTION						
I_{DETECT}	Battery detection current before charge done (sink current)(1)	Begins after termination detected	-0.5			mA
t_{DETECT}	Battery detection time		262			ms
$t_{DETECT2}$	Battery detection time after linear charge is complete and PWM starts		262			ms
SLEEP COMPARATOR						
V_{SLP}	Sleep-mode entry threshold, V_{BUS}-V_{VBAT} or V_{IN} – V_{VBAT}	2.3 V ≤ V_{VBAT} ≤ V_{OREG}, V_{BUS} or V_{IN} falling	0	40	100	mV
$V_{SLP-EXIT}$	Sleep-mode exit hysteresis	2.3 V ≤ V_{VBAT} ≤ V_{OREG}	70	110	200	mV
	Deglitch time for V_{BUS} or V_{IN} rising above V_{SLP}+V_{SLP_EXIT}	Rising voltage, 2-mV over drive, t_{RISE} = 100 ns		30		ms
UNDER-VOLTAGE LOCKOUT (UVLO)						
V_{UVLO}	IC active threshold voltage	V_{BUS} or V_{IN} rising	3.05	3.3	3.65	V
V_{UV_HYS}	IC active hysteresis	V_{BUS} or V_{IN} falling from above V_{UVLO}	90	100		mV
PWM						
V_{BOOT}	Voltage from BOOT1 pin to SW1 pin, or Voltage from BOOT2 pin to SW2 pin				6.5	V
R_{ON_Q1}	Internal top reverse blocking MOSFET on-resistance	I_{IN_LIMIT} = 500 mA, Measured from V_{IN} to PMID2		100	150	mΩ
R_{ON_Q2}	Internal top N-channel Switching MOSFET on-resistance	Measured from PMID2 to SW2, V_{BOOT2} – V_{SW2} = 4 V		120	200	mΩ
R_{ON_Q3}	Internal bottom N-channel MOSFET on-resistance	Measured from SW2 to GND		110	200	mΩ
R_{ON_Q4}	Internal top reverse blocking MOSFET on-resistance	I_{IN_LIMIT} = 500 mA, Measured from V_{BUS} to PMID1		100	150	mΩ
R_{ON_Q5}	Internal top N-channel Switching MOSFET on-resistance	Measured from PMID1 to SW1, V_{BOOT1} – V_{SW1} = 4 V		120	200	mΩ
R_{ON_Q6}	Internal bottom N-channel MOSFET on-resistance	Measured from SW1 to GND		110	200	mΩ
f_{OSC}	Oscillator frequency			3.0		MHz
	Frequency accuracy		–10%		10%	
D_{MAX}	Maximum duty cycle			99.5%		
D_{MIN}	Minimum duty cycle		0			
	Synchronous mode to non-synchronous mode transition current threshold(2)	Low-side MOSFET cycle-by-cycle current sensing		100		mA
CHARGE MODE PROTECTION						
$V_{OVP-VIN}$	Input OVP for VIN	Rising edge	9.6	9.8	10.0	V
	$V_{OVP\ VIN}$ hysteresis			140		mV
$V_{OVP-VBUS}$	Input OVP for VBUS	Rising edge	6.3	6.5	6.7	V
	VOVP VBUS hysteresis			170		mV
V_{OVP}	Output OVP threshold voltage	V_{VBAT} threshold over V_{OREG} to turn off charger during charge	110	117	121	%V_{OREG}
	VOVP hysteresis	Lower limit for V_{VBAT} falling from above V_{OVP}		11		%V_{OREG}
I_{LIMIT}	Cycle-by-cycle current limit for charge	Charge mode operation	1.8	2.4	3.0	A
V_{SHORT}	Trickle to fast charge threshold	V_{VBAT} rising	2.0	2.1	2.2	V
	V_{SHORT} hysteresis			100		mV
I_{SHORT}	Trickle charge charging current	V_{VBAT} ≤ V_{SHORT}	20	30	40	mA

(1) Negative charge current means the charge current flows from the battery to charger (discharging battery).
(2) Bottom N-channel MOSFET always turns on for ~60 ns and then turns off if current is too low.

Copyright © 2011, Texas Instruments Incorporated

ELECTRICAL CHARACTERISTICS (continued)

Circuit of Figure 1, V_{BUS} = 5V, HZ_MODE=0, OPA_MODE=0, CD=0, T_J = –40°C–125°C and T_J = 25°C for typical values

PARAMETER		TEST CONDITIONS	MIN	TYP	MAX	UNIT
BOOST MODE OPERATION FOR V_{BUS} (OPA_MODE=1, HZ_MODE=0, VBUS input only)						
V_{BUS_BOOST}	Boost output voltage (to VBUS pin)	2.5 V < V_{VBAT} < 4.5 V		5.05		V
	Boost output voltage accuracy	Including line and load regulation	-3%		+3%	
I_{BOOST}	Maximum output current for boost	V_{BUS} = 5.05 V, 2.5 V < V_{VBAT} < 4.5 V	650			mA
I_{BLIMIT}	Cycle by cycle current limit for boost	V_{BUS} = 5.05 V, 2.5 V < V_{VBAT} < 4.5 V		1.0		A
V_{BUSOVP}	Over voltage protection threshold for boost (VBUS pin)	Threshold over V_{BUS} to turn off converter during boost	5.8	6.0	6.2	V
	V_{BUSOVP} hysteresis	V_{BUS} falling from above V_{BUSOVP}		162		mV
V_{BATMAX}	Maximum battery voltage for boost (VBAT pin)	V_{VBAT} rising edge during boost	4.65	4.75	4.85	V
	V_{BATMAX} hysteresis	V_{VBAT} falling from above V_{BATMAX}		70		mV
V_{BATMIN}	Minimum battery voltage for boost (VBAT pin)	During boosting		2.3		V
		Before boost starts		2.8	2.97	
	Boost output resistance at high-impedance mode (From VBUS to PGND)	CD = 1 or HZ_MODE = 1	500			kΩ
ICC_BOOST	Operation quiescent current in boost mode	No load at VBUS, power save mode, V_{VBAT} = 4 V, boosting		650		µA
PROTECTION						
T_{SHTDWN}	Thermal trip			165		°C
	Thermal hysteresis			10		°C
T_{CF}	Thermal regulation threshold	Charge current begins to taper down		120		°C
T_{32S}	Time constant for the 32-second timer	32 second mode	15	32		S
T_{15M}	Time constant for the 15-minute timer	15 minute mode	12		15	Minute
VREG						
V_{REG}	VREG Regulator	I_{LOAD} = 1mA, CREG = 0.1µF, VIN > V_{UVLO}	2.34	2.6	2.86	V
$I_{LIM\ VREG}$	Current limit VREG	VREG = 0V	10			mA

Copyright © 2011, Texas Instruments Incorporated

TYPICAL APPLICATION CIRCUITS

V_{IN}=5V or V_{BUS}=5V, I_{CHARGE} = 1550mA, V_{BAT} = 3.5--4.44V (Adjustable), Safety Timer = 15 minutes or 32 seconds

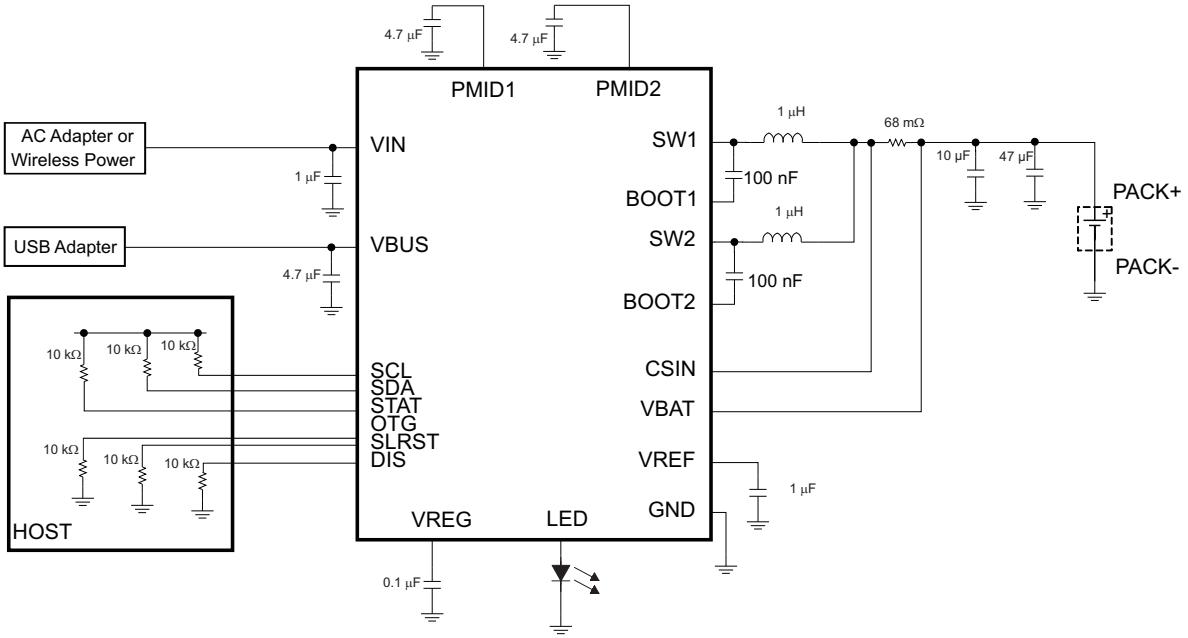

Figure 1. I²C Controlled 1-Cell USB and AC or Wireless Power Charger Application Circuit

Copyright © 2011, Texas Instruments Incorporated

V_{IN}=5V or V_{BUS}=5V, I_{CHARGE} = 1550mA, V_{BAT} = 3.5--4.44V (Adjustable), Safety Timer = 15 minutes or 32 seconds

BLOCK DIAGRAM

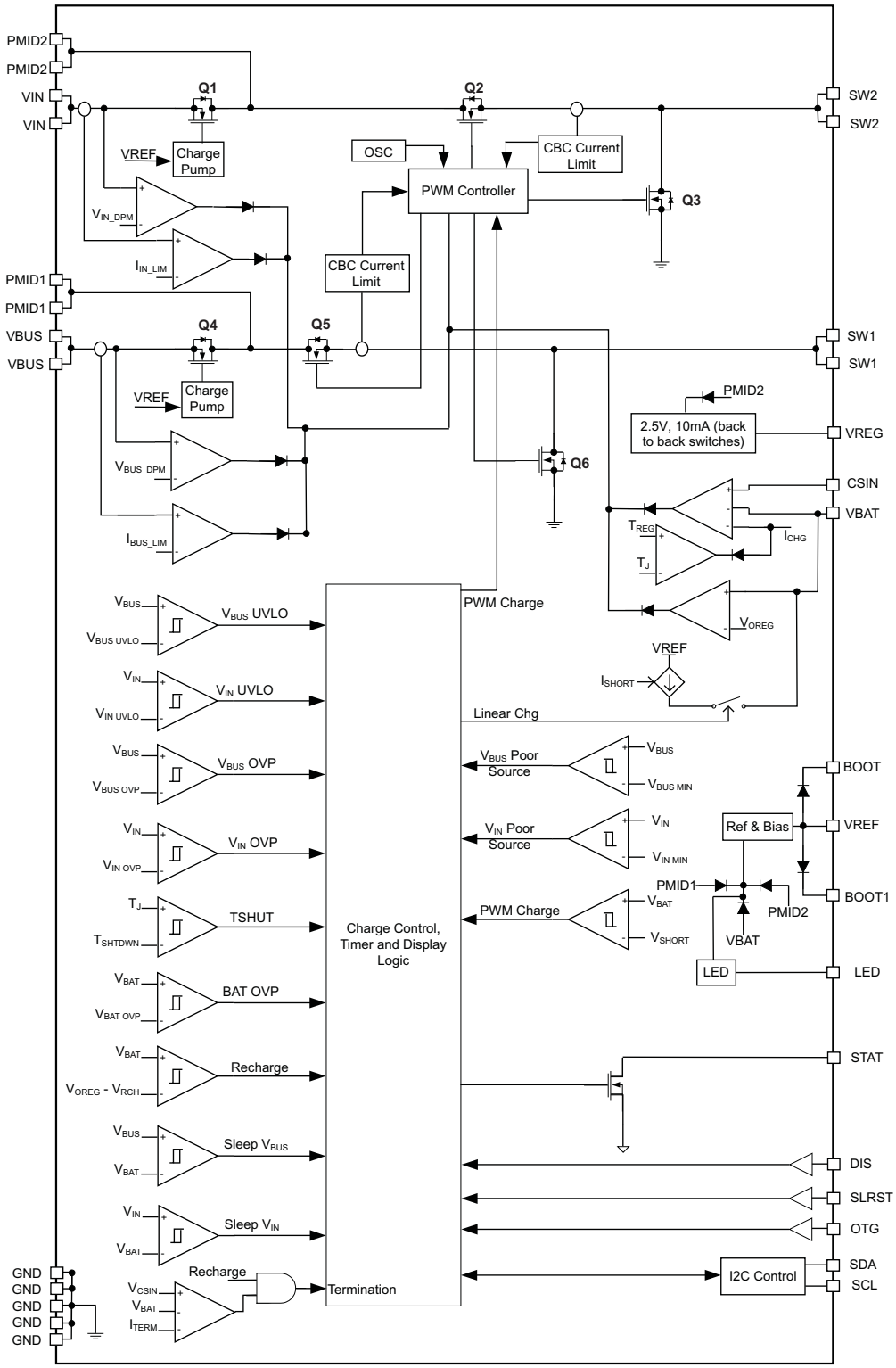

Figure 2. bq24140 Block Diagram

TYPICAL PERFORMANCE CHARACTERISTICS

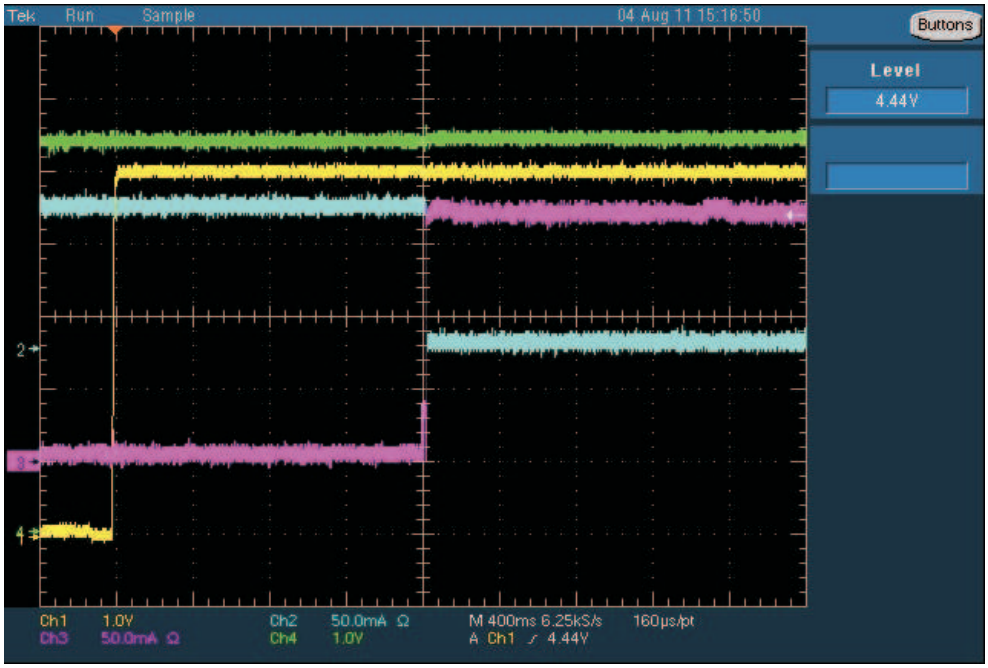

Figure 3. VBUS to VIN Charging – Default Mode C1:VIN, CH2: IVBUS, CH3: IVIN, CH4: VBUS

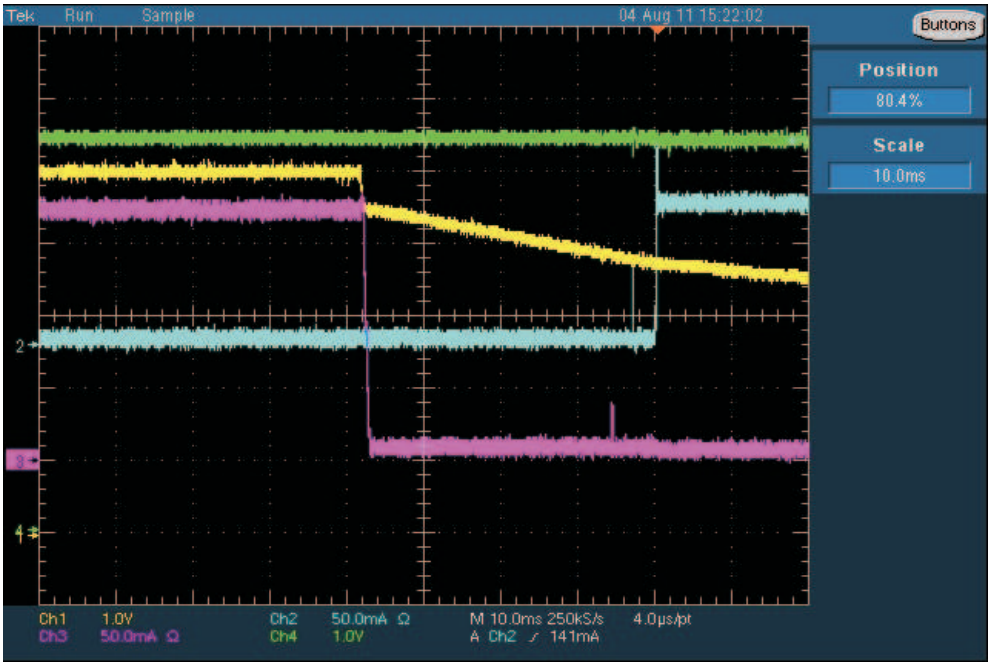

Figure 4. VIN Charging and removed, switch to VBUS – Default Mode C1:VIN, CH2: IVBUS, CH3: IVIN, CH4: VBUS

Copyright © 2011, Texas Instruments Incorporated

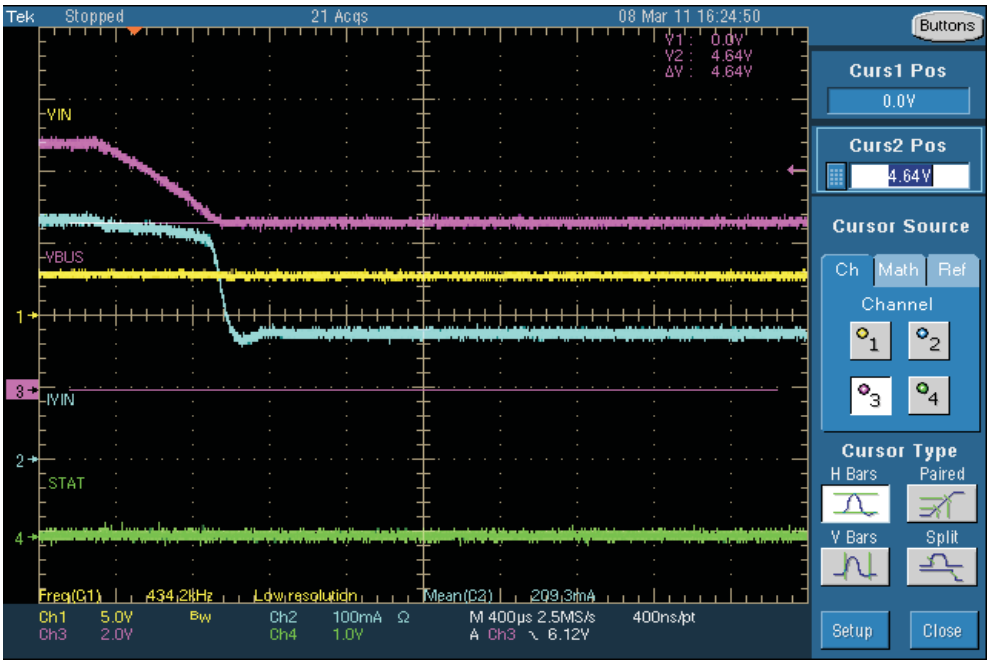

Figure 5. VBUS Dynamic Power Management (DPM) – C1:VIN, CH2: IVBUS, CH3: VBUS, CH4: STAT

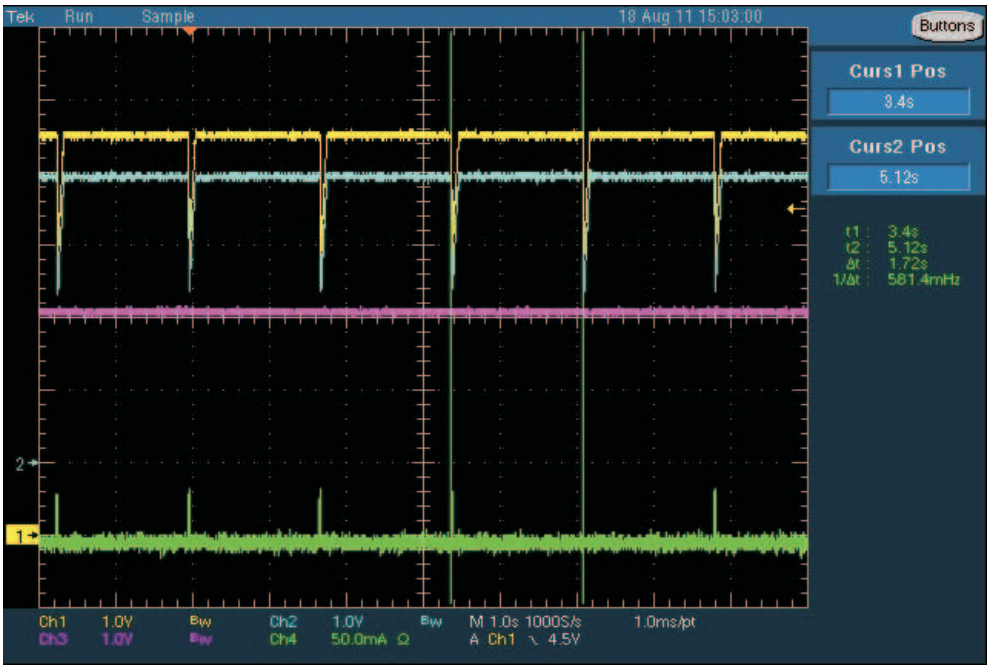

Figure 6. VBUS Dynamic Power Management (DPM) – CH1:VIN, CH2: STAT, CH3: VBAT, CH4: IVIN

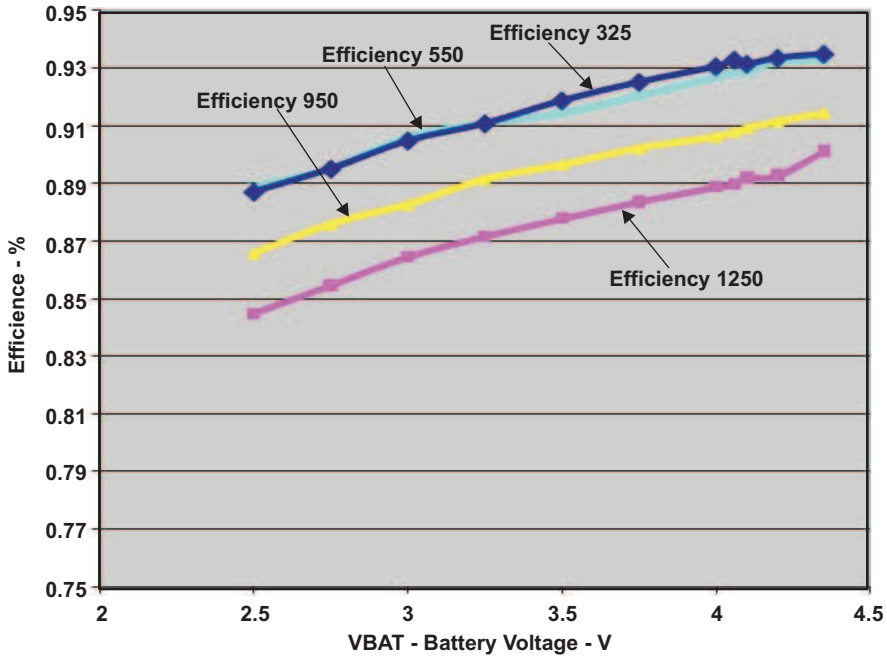

Figure 7. VBUS Efficiency versus Battery Voltage

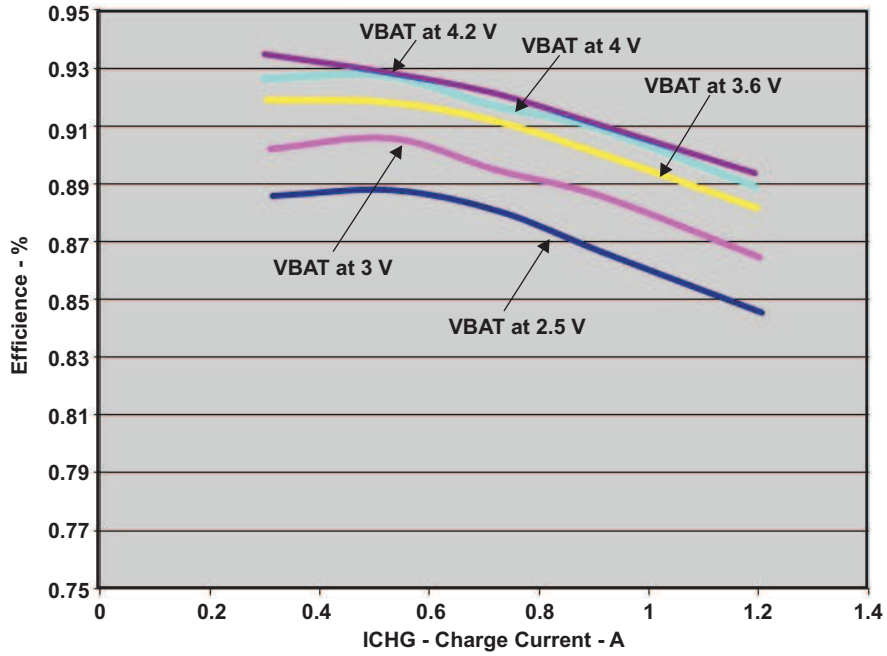

Figure 8. VBUS Efficiency versus Charge Current

 Copyright © 2011, Texas Instruments Incorporated

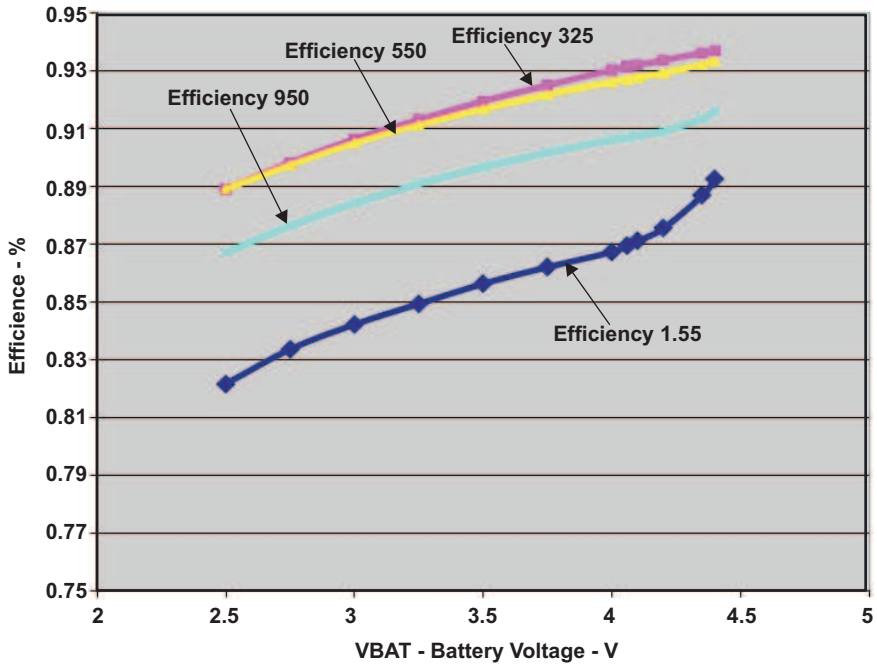

Figure 9. VIN Efficiency versus Battery Voltage

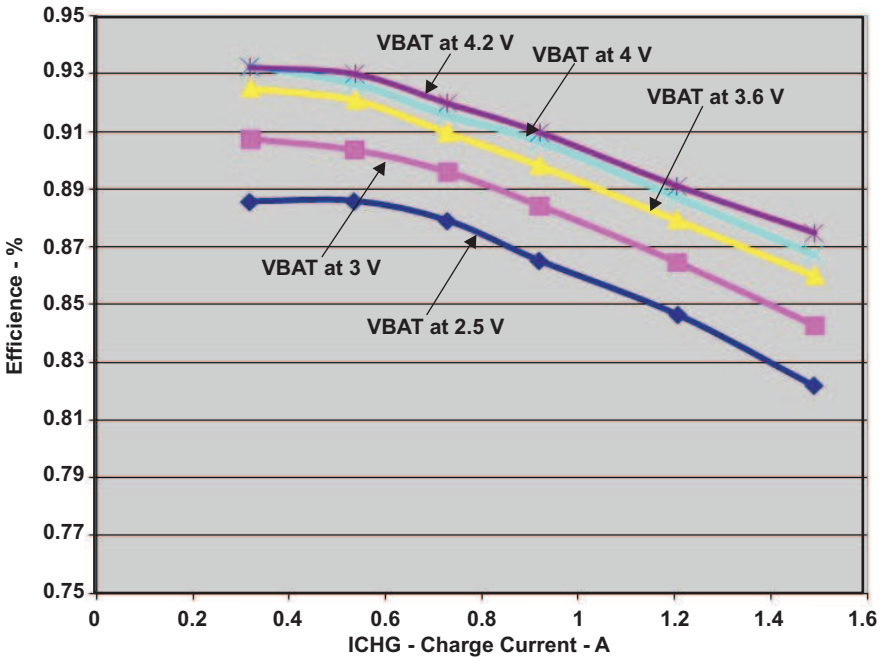

Figure 10. VIN Efficiency versus Charge Current

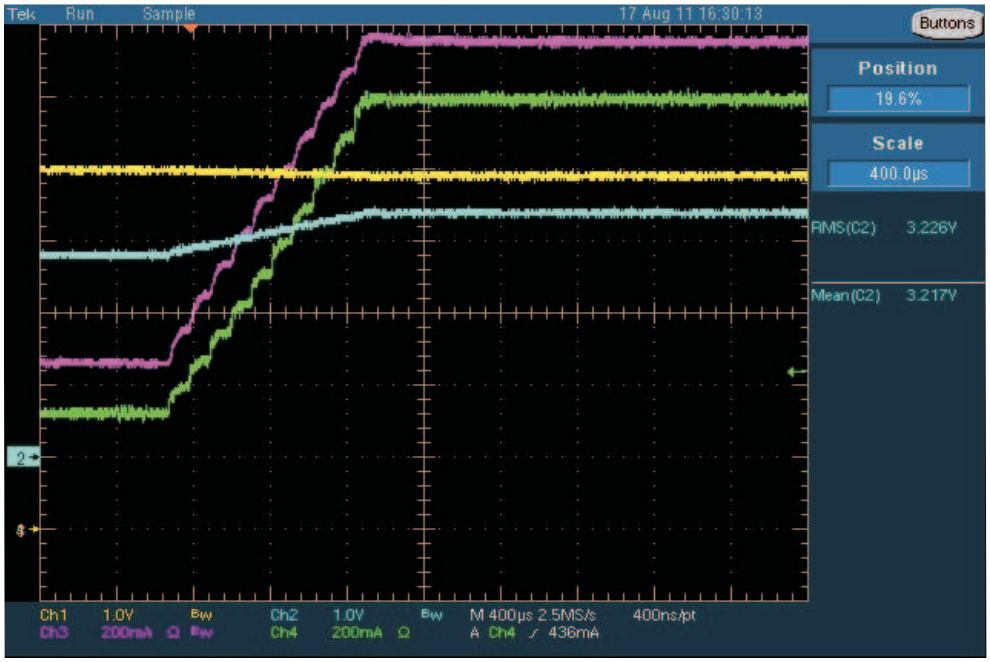

Figure 11. Charge Current Response – 550mA to 1.55A
CH1: VIN, CH2: VBAT, CH3: IBAT, CH4: IVIN

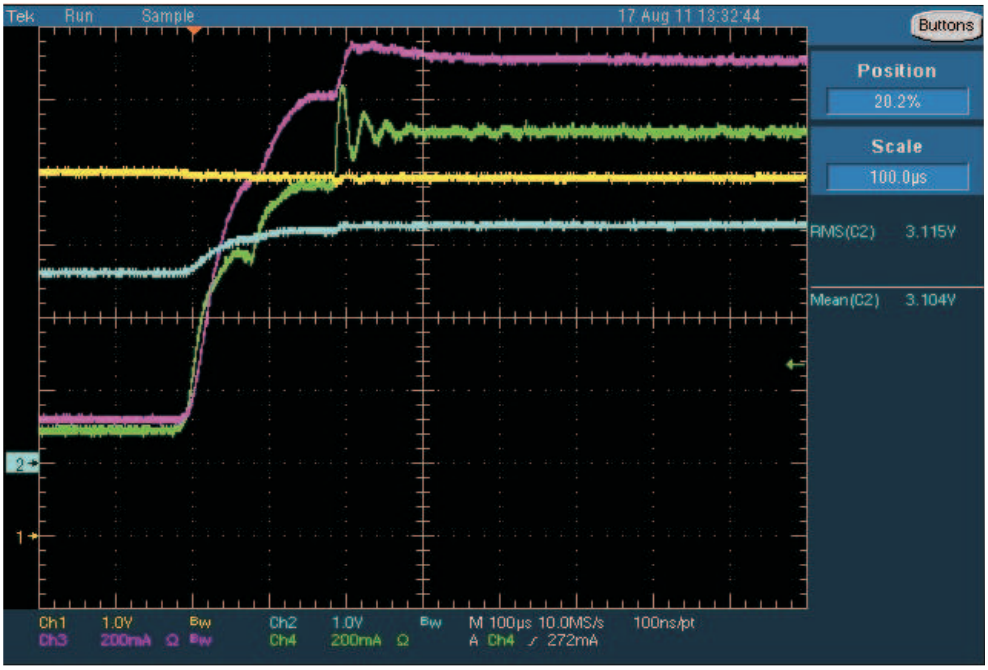

Figure 12. Input Current Regulation Response – 100mA to No Limit
CH1: VIN, CH2: VBAT, CH3: IBAT, CH4: IVIN

 Copyright © 2011, Texas Instruments Incorporated

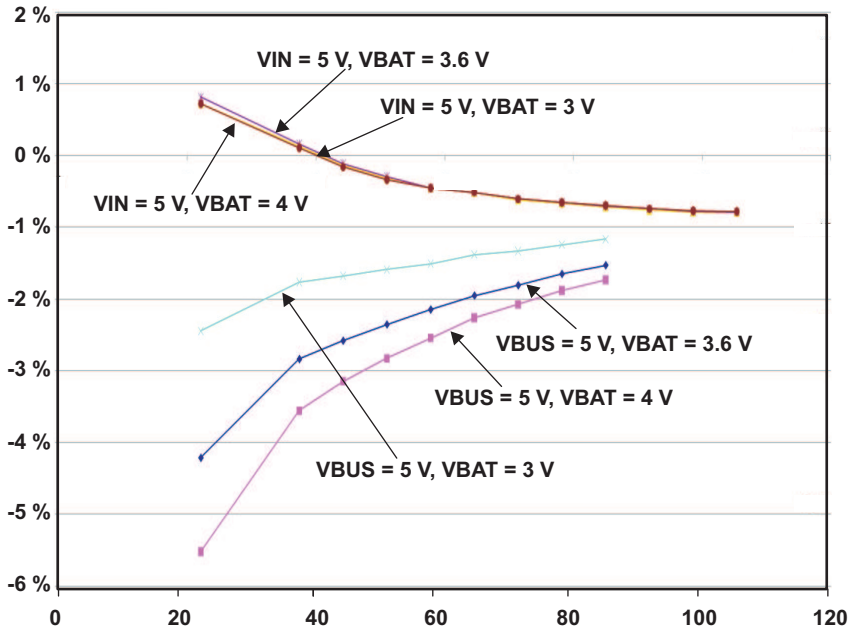

Figure 13. Typical Charge Current Accuracy

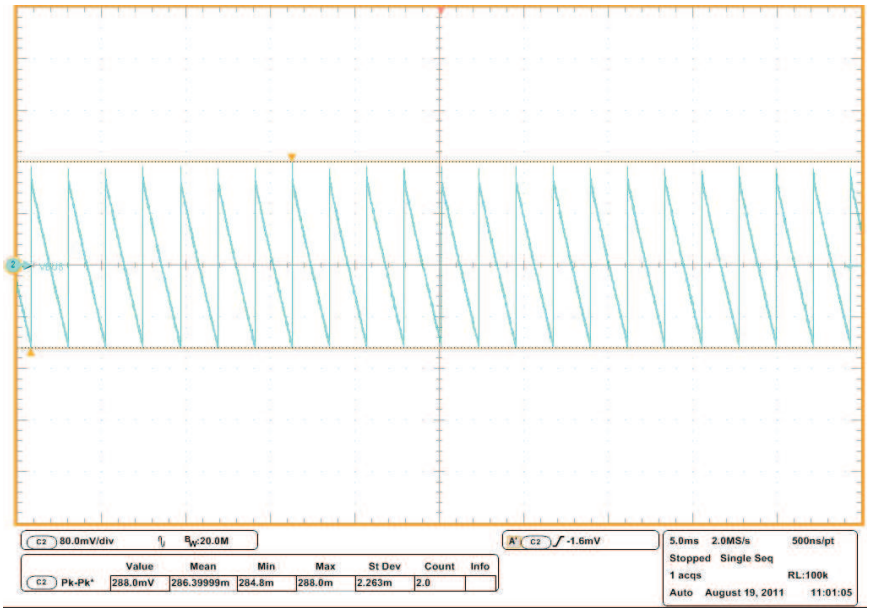

Figure 14. VBUS OTG in PFM Mode

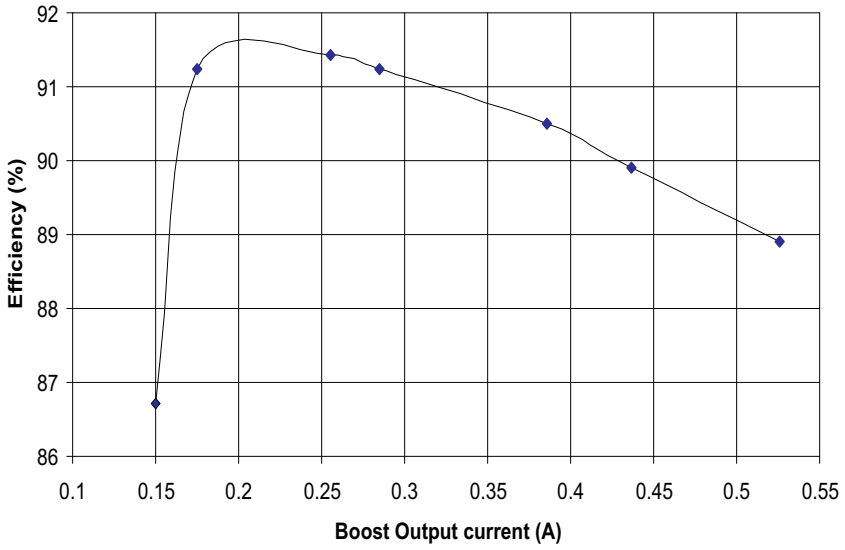

Figure 15. VBUS OTG Efficiency

DETAILED FUNCTIONAL DESCRIPTION

The bq24140 is a highly integrated dual input switch-mode battery charger with USB-OTG support. Due to the switch-mode architecture, it provides the capability of charging the battery faster than traditional linear chargers in the event that the power source is current limited, such as USB ports. In addition to the reduced charge time, higher efficiencies reduce the power losses through the charger and allows for better thermal management of the end product.

The bq24140 integrates a dual input 3MHz synchronous switching charger that targets space limited portable applications powered by a single cell Li based battery pack. In addition to charge the battery, the bq24140 provides support for simultaneously boosting the battery voltage back to the USB input for USB-OTG support.

The bq24140 has two operation modes: default mode and host-control mode. In default mode, the charger will start a charge cycle with the default parameters and wait for an I2C write to the IC before entering host-mode. In host-control mode, the charger will switch to a 32s watchdog timer and the charge paramters will follow the information set on the registers.

The bq24140 provides three ways of configuring the charger, charge mode, boost mode and high impedance mode. These 3 configuration allows for multiple possible settings of the charge systems, including charging the battery and providing power to an accessory. The high impedance mode reduces the quiescent current from the device, effectively reducing the power consumption when the portable device is in standby mode. Integrated control loops ensure smooth transitions between the different operating modes.

PWM Buck Charger

The IC provides an integrated, fixed 3 MHz frequency voltage-mode controller to regulate charge current or voltage. This type of controller is used to improve line transient response, thereby, simplifying the compensation network used for both continuous and discontinuous current conduction operation. The voltage and current loops are internally compensated using a Type-III compensation scheme that provides enough phase margin for stable operation, allowing the use of small ceramic capacitors with very low ESR. The device operates between 0% to 99.5% duty cycles.

The IC has back to back common-drain N-channel FETs at the high side and one N-channel FET at low side for both VIN and VBUS inputs. The input N-FETs (Q1, Q4) prevents battery discharge when VIN and/or VBUS is lower than VBAT. The second high-side N-FET (Q2, Q5) are the switching FETs. A charge pump circuit is used to provide gate drive for Q1 and Q4, while a bootstrap circuit with an external bootstrap capacitor is used to supply the gate drive voltage for Q2 and Q5.

 Copyright © 2011, Texas Instruments Incorporated

Cycle-by-cycle current limit is sensed through FETs Q4 and Q5 for the high side current limit and through Q3 and Q6 for the low side current limit. The high side current limit threshold is set to a nominal 2.4-A peak current. The low-side current limit decides if the PWM Controller will operate in synchronous or non-synchronous mode. This threshold is set to 100mA and it turns off the low-side N-channel FETs (Q3 and/or Q6) before the current reverses, preventing the battery from discharging. Synchronous operation is used when the current of the low-side FET is greater than 100mA to minimize power losses.

If the battery voltage is below the $V(_{SHORT})$ threshold, the bq24140 applies the short circuit current, $I(_{SHORT})$, to the battery. The purpose of this current is to close an open protector on the battery pack. Once the battery voltage rises above V_{SHORT}, the bq24140 ramps us the charge current to the programmed I_{CHARGE} value. If the programmed charge current requires an input current that is higher than the programmed I_{IN_LIMIT} value, then the bq24140 will regulate the input current and the charge current will be limited by the input current loop. The slew rate for fast charge current is controlled to minimize the current and voltage over-shoot during transient. Both the input current limit, I_{IN_LIMIT}, and fast charge current, I_{CHARGE}, can be set by the host. Once the battery voltage reaches the programmed regulation voltage, V_{OREG}, the charge current is tapered down. (See Figure 16 and Figure 17.

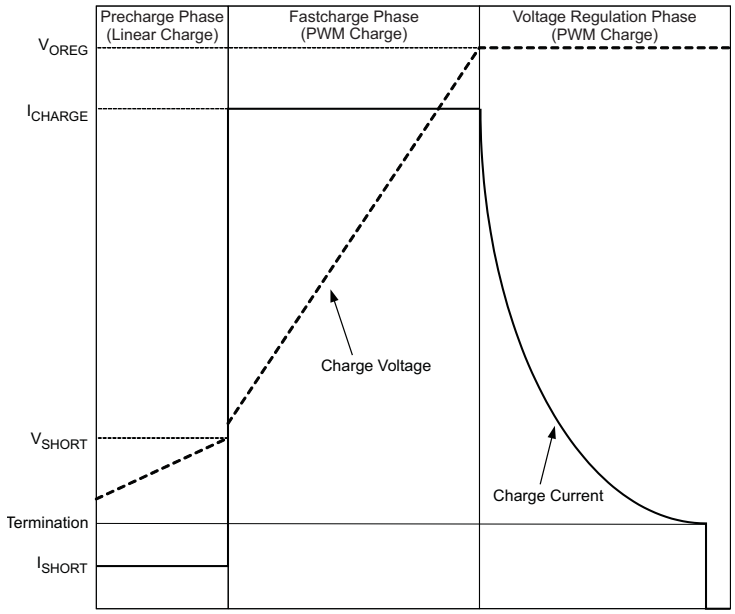

Figure 16. Typical Charging Profile for No Input Current Limit

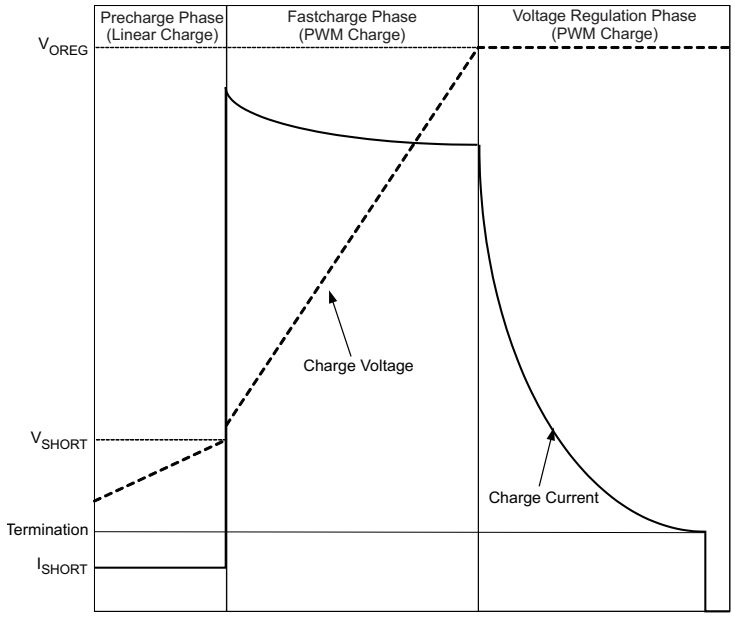

Figure 17. Typical Charging Profile With Input Current Limit

The voltage regulation feedback occurs by monitoring the battery-pack voltage between the VBAT and GND pins. The regulation voltage is adjustable (3.5V to 4.44V) and is programmed through I^2C interface. The IC monitors the charging current during the voltage regulation phase. When the termination is enabled, once the termination threshold, I_{TERM}, is detected and the battery voltage is above the recharge threshold, the IC terminates charge. The termination current level is programmable. To disable the charge current termination, the host can set the charge termination bit (TE) of charge control register to 0, refer to I^2C section for detail.

A new charge cycle is initiated when one of the following conditions is detected:

- The battery voltage falls below the $V_{(OREG)} – V_{(RCH)}$ threshold.
- VBUS or VIN Power-on reset (POR), if battery voltage is below the $V_{(LOWV)}$ threshold.
- CE bit toggle or RESET bit is set (Host controlled)

Figure 18 shows an operational flow chart of the bq24140 in charge mode.

 Copyright © 2011, Texas Instruments Incorporated

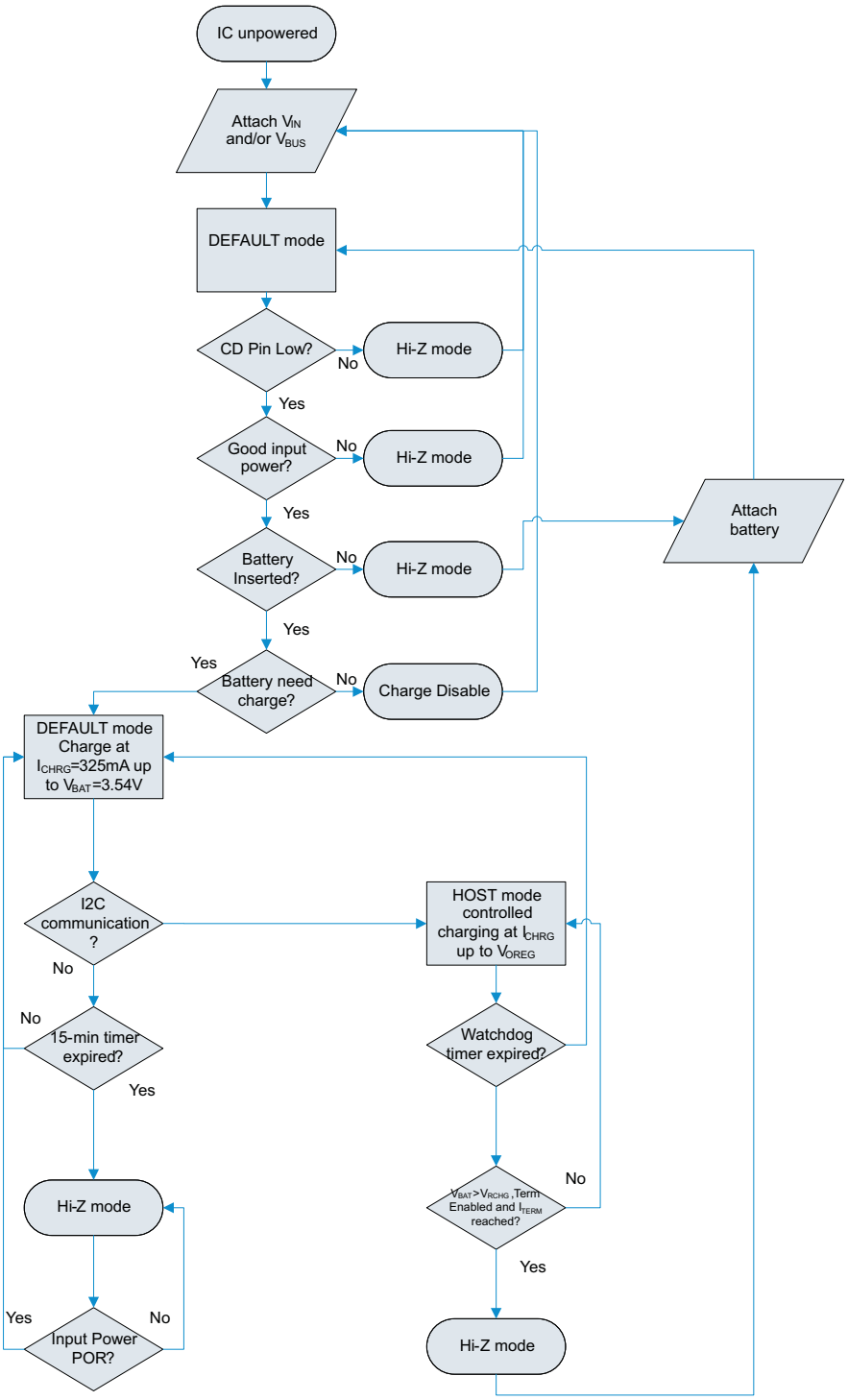

Figure 18. Operational Flowchart

POWER UP

When a power source is first connected to the bq24140, the IC will go to default mode for 15 minutes. In default mode, the bq24140 is configured with safe charging parameters for charge current, charge voltage and input current. Once a write event is done to the bq24140 through I^2C, the device enters host mode and the device will then follow the parameters as they are written by the host.

During initial power up in default mode, the device will look at the battery voltage. If the battery voltage is less than the V_{LOWV}, the device will charge the battery with a default charge current of 325mA and a default battery charge voltage of 3.54V. The input current limit value depends on which power source was used. In the case the bq24140 is powered up from the VIN source, the input current limit is set to 500mA. If the device is powered up from the VBUS source, the input current limit depends on the status of the OTG pin. If the OTG pin is low, the input current limit is set to 100mA. If the OTG pin is high, the input current limit is set to 500mA.

INPUT POWER SOURCE PRIORITY

When two power supplies are detected in default mode, the bq24140 will default to VIN operation and the VBUS input will go to high impedance. There is a blanking time between switching from one power source to the other power source of 10ms ($t_{HANDOFF}$). The state diagram below describes the operation (Figure 19).

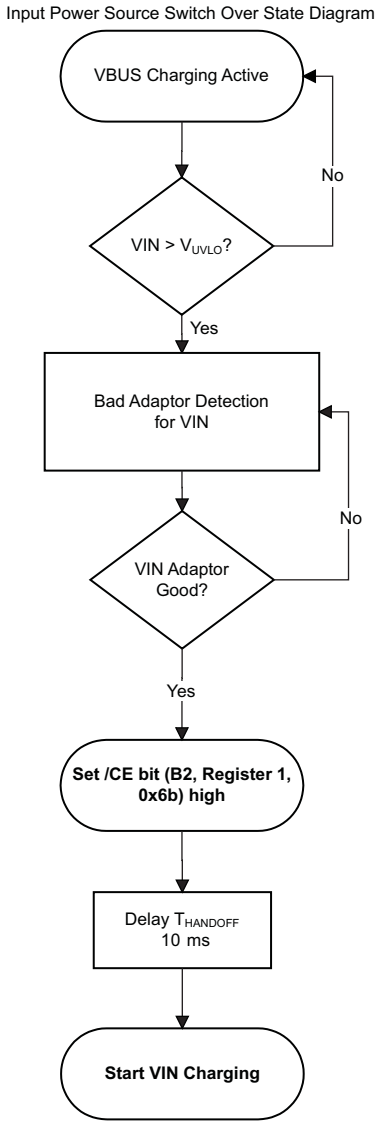

Figure 19. Input power source selection in default mode

In the case where the bq24140 is in host mode, power priority will be dictated by the Host by setting one input to high impedance and activating the other input using the HZ_MODE bit of the control register.

Copyright © 2011, Texas Instruments Incorporated

BAD ADAPTOR DETECTION

At POR of VBUS or VIN, the IC performs the bad adaptor detection by applying a current sink of 30mA to the valid power pin. If the power pin is higher than VIN(MIN) for 30ms, the adaptor is good and the charge process begins. Otherwise, if the power pin drops below VIN(MIN), a bad adaptor is detected. Once a bad adaptor is detected, the IC disables the current sink, sends a send fault pulse in FAULT pin and sets the bad adaptor flag (B2-B0=011 for Register 0x00). After a delay of T_{INT}, the IC repeats the adaptor detection process, as shown in the flowchart below:

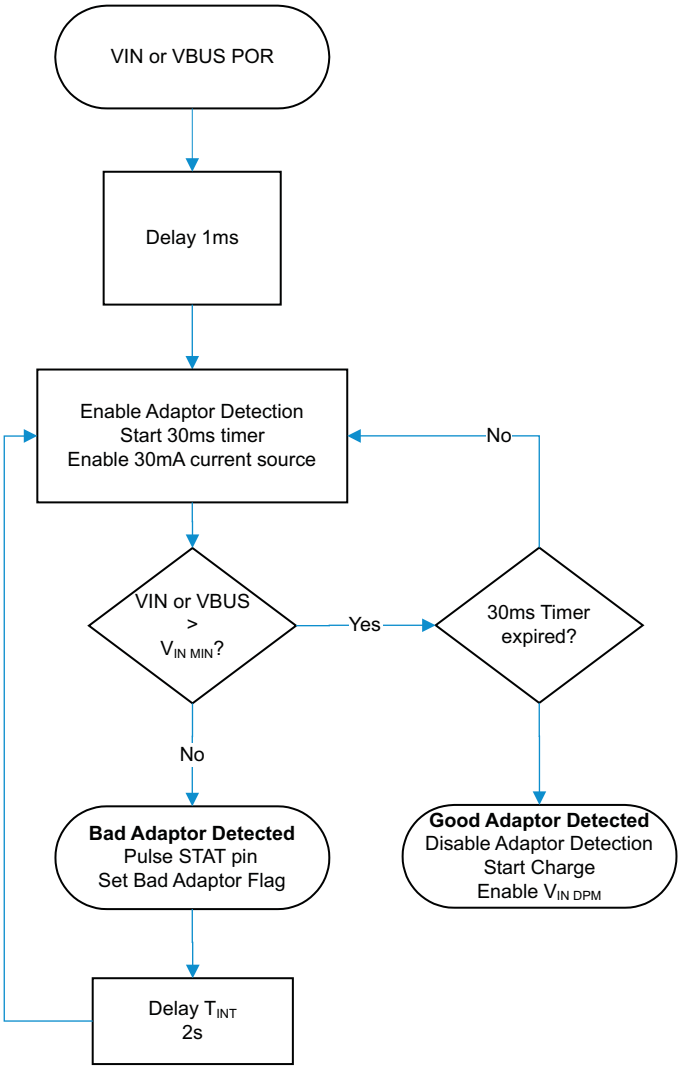

Figure 20. Bad Adaptor Detection

BATTERY DETECTION

Battery detection during charging

During normal charging process with host control, once the voltage at the VBAT pin is above the battery recharge threshold, V_{OREG}–V_{RCH}, and the termination charge current is detected, the IC turns off the PWM charge and enables a discharge current, I_{DETECT}, for a period of t_{DETECT}, then checks the battery voltage. If the battery voltage is still above recharge threshold, the IC concludes that the battery is present and charge is completed. On the other hand, if the battery voltage is below battery recharge threshold, the IC concludes that the battery was removed. Under this condition, the charge parameters (such as input current limit) are reset to the default values and charge resumes after a delay of t_{INT}. This function ensures that the charge parameters are reset whenever the battery is replaced.

Copyright © 2011, Texas Instruments Incorporated

Battery detection during power-up

The bq24140 also has a unique battery detection scheme during the start up of the charger. At power up, if the timer is in 15-minute mode, bq24140 will start a 262ms timer when exiting from short circuit mode to PWM charge mode. If the battery voltage is charged to recharge threshold (V_{OREG}–V_{RCH}) and the 262ms timer has not expired yet, or battery voltage is above output OVP threshold during short-circuit mode, bq24140 will consider the battery is not present; then stop charging and go to high impedance mode immediately. However, if the 262ms timer has expired before the recharge threshold is reached, the charging process will continue as normal.

HIGH-SIDE LED DRIVER

The LED pin is a high-side LED driver. This LED function needs to run from the battery and the expected output current can be programmed through I^2C. There are 2 bits for programming the output current from the LED pin. In addition, there is extra programmability for the LED function. Since there is only one LED driver used by both the VIN and VBUS charger cores, there is only one LED register that can be accessed through the addresses 6AH and 6BH. When one of the two addresses is written, the settings for both cores will be set. Refer to the Register Description Section for details on the LED programmable timings and current options.

BOOST CONVERTER OPERATION

The bq24140 support USB-OTG for the VBUS pin when OTG mode is enabled. In this configuration, the battery voltage is boosted to 5.05V (±3%). The maximum output current for the boost converted is increased to 650mA minimum current.

Boost Start Up

To prevent the inductor saturation and limit the inrush current, a soft-start control is applied during the boost start up.

PFM Mode at Light Load

In boost mode, the IC operates in pulse skipping mode (PFM mode) to reduce the power loss and improve the converter efficiency at light load condition. During boosting, the PWM converter is turned off if the inductor current falls below than 200mA. The PWM is turned back on only when the voltage at PMID pin drops to 99.5% of the typical rated output voltage. A unique pre-set circuit is used to make the smooth transition between PWM and PFM mode.

Safety Timer in Boost Mode

At the beginning of boost operation, the IC starts a 32-second timer that is reset by the host using the I^2C interface. Writing “1” to reset bit of TMR_RST in control register will reset the 32-second timer and TMR_RST is automatically set to “0” after the 32-second timer is reset. Once the 32-second timer expires, the IC turns off the boost converter, enunciates the fault pulse from the STAT pin and sets fault status bits in the status register. The fault condition is cleared by POR or host control.

Charge Status Output, STAT Pin

The STAT pin is used to indicate operation conditions for bq24140. STAT is pulled low during charging when EN_STAT bit in control register (00H) is set to “1”. Under other conditions, STAT pin behaves as a high impedance (open-drain) output. Under fault conditions, a 128-µs pulse will be sent out to notify the host. The status of STAT pin at different operation conditions is summarized in Table 1. The STAT pin can be used to drive an LED or communicate to the host processor.

Table 1. STAT Pin Summary

CHARGE STATE	STAT
Charge in progress and EN_STAT = 1	Low
Other normal conditions	Open-Drain
Charge mode faults and input not in HiZ	128 µs pulse, then open-drain
Boost mode faults and input not in HiZ	128 µs pulse, then open-drain
VIN Present bit change (H→L or L→H) regardless of HiZ status	128 µs pulse, then normal per above cases
VBUS Present bit change (H→L or L→H) regardless of HiZ status	128 µs pulse, then normal per above cases

Copyright © 2011, Texas Instruments Incorporated

Safety Limit Registers

The bq24140 includes safety limit registers which are used as an extra level of security for devices that allow applications to be developed by third party vendors (i.e. Android OS). The purpose of the safety limit registers is to program the maximum allowable battery regulation voltage and charge current. These two registers need to be written before any other write actions are sent to the bq24140. Once a write action to a register other than the safety limit registers, the values on the safety limit registers will be locked.

SLRST Pin

When SLRST=0, the bq24140 will reset all the safety limits to default values, regardless of the write actions to safety limits registers (06H). When SLRST=1, the bq24140 can program the safety limit register until any write action to other registers locks the programmed safety limits.

VREG LDO

The bq24140 includes a 2.6V LDO that can be used as an indication of the VIN input being connected. This LDO is active all the time when there is a power source connected to the VIN input. The current limit on the LDO guarantees up to 10mA.

SERIAL INTERFACE DESCRIPTION

I^2C is a 2-wire serial interface developed by Philips Semiconductor (see I^2C-Bus Specification, Version 2.1, January 2000). The bus consists of a data line (SDA) and a clock line (SCL) with pull-up structures. When the bus is idle, both SDA and SCL lines are pulled high. All the I^2C compatible devices connect to the I2C bus through open drain I/O pins, SDA and SCL. A master device, usually a microcontroller or a digital signal processor, controls the bus. The master is responsible for generating the SCL signal and device addresses. The master also generates specific conditions that indicate the START and STOP of data transfer. A slave device receives and/or transmits data on the bus under control of the master device.

The IC works as a slave and is compatible with the following data transfer modes, as defined in the I^2C-Bus Specification: standard mode (100 kbps), fast mode (400 kbps), and high-speed mode (up to 3.4 Mbps in write mode). The interface adds flexibility to the battery charge solution, enabling most functions to be programmed to new values depending on the instantaneous application requirements. Register contents remain intact as long as supply voltage remains above 2.2 V (typical). I^2C is asynchronous, which means that it runs off of SCL. The device has no noise or glitch filtering on SCL, so SCL input needs to be clean. Therefore, it is recommended that SDA changes while SCL is LOW.

The data transfer protocol for standard and fast modes is exactly the same, therefore, they are referred to as F/S-mode in this document. The protocol for high-speed mode is different from the F/S-mode, and it is referred to as HS-mode. The IC supports 7-bit addressing only. **The device has two 7-bit addresses, defined as '1101011' (6BH) for USB portion and, and '1101010' (6AH) for AC portion.**

REGISTER DESCRIPTION

For I2C address 6BH (USB Charger)

Status/Control Register (READ/WRITE)

Memory location: 00, Reset state: x1xx 0xxx

BIT	NAME	Read/Write	FUNCTION
B7(MSB)	TMR_RST/OTG	Read/Write	Write: TMR_RST function, write “1” to reset the safety timer (auto clear) Read: OTG pin status, 0-OTG pin at Low level, 1-OTG pin at High level;
B6	EN_STAT	Read/Write	0-Disable STAT pin function, 1-Enable STAT pin function (default 1)
B5	STAT2	Read only	00-Ready, 01-Charge in progress, 10-Charge done, 11-Fault
B4	STAT1	Read only	
B3	BOOST	Read only	Boost mode, 0—Not in boost mode.
B2	FAULT_3	Read only	Charge mode: 000-Normal, 001-VBUS OVP, 010-Sleep mode, 011-Bad Adaptor or VBUS<VUVLO, 100-Output OVP, 101-Thermal shutdown, 110-Timer fault, 111-No battery
B1	FAULT_2	Read only	
B0(LSB)	FAULT_1	Read only	Boost mode: 000-Normal, 001-V_{BUS} OVP, 010-Over load, 011-Battery voltage is too low, 100-Battery OVP, 101-Thermal shutdown, 110-Timer fault, 111-NA

Control Register (READ/WRITE)

Memory location: 01, Reset state: 0011 0000

BIT	NAME	Read/Write	FUNCTION
B7(MSB)	Iin_Limit_2	Read/Write	00-USB host with 100-mA current limit, 01-USB host with 500-mA current limit, 10-USB host/charger with 800-mA current limit, 11-No input current limit (default 00)
B6	Iin_Limit_1	Read/Write	
B5	VLOWV_2 (1)	Read/Write	200 mV weak battery voltage threshold (default 1)
B4	VLOWV_1 (1)	Read/Write	100 mV weak battery voltage threshold (default 1)
B3	TE	Read/Write	1-Enable charge current termination, 0-Disable charge current termination (default 0)
B2	$\overline{CE}$	Read/Write	1-Charger is disabled, 0-Charger enabled (default 0)
B1	HZ_MODE	Read/Write	1-High impedance mode, 0-Not high impedance mode (default 0)
B0(LSB)	OPA_MODE	Read/Write	1-Boost mode, 0-Charger mode (default 0)

(1) The range of weak battery voltage threshold (VLOWV) is 3.4V–3.7V with the offset of 3.4V and step of 100mV (default 3.7V).

Control/Battery Voltage Register (READ/WRITE)

Memory location: 02, Reset state: 0000 1010

BIT	NAME	Read/Write	FUNCTION
B7(MSB)	V_{OREG5}	Read/Write	Battery Regulation Voltage: 640 mV (default 0)
B6	V_{OREG4}	Read/Write	Battery Regulation Voltage: 320 mV (default 0)
B5	V_{OREG3}	Read/Write	Battery Regulation Voltage: 160 mV (default 0)
B4	V_{OREG2}	Read/Write	Battery Regulation Voltage: 80 mV (default 0)
B3	V_{OREG1}	Read/Write	Battery Regulation Voltage: 40 mV (default 1)
B2	V_{OREG0}	Read/Write	Battery Regulation Voltage: 20 mV (default 0)
B1	OTG_PL	Read/Write	Active at High level, 0-Active at Low level (default 1)
B0(LSB)	OTG_EN	Read/Write	Enable OTG Pin, 0-Disable OTG pin (default 0)

- Charge voltage range is 3.5V–4.44V with the offset of 3.5V and step of 20mV (default 3.54V).

Copyright © 2011, Texas Instruments Incorporated

Vender/Part/Revision Register (READ only)

Memory location: 03, Reset state: 0101 0000

BIT	NAME	Read/Write	FUNCTION
B7(MSB)	Vender2	Read only	Vender Code: bit 2 (default 0)
B6	Vender1	Read only	Vender Code: bit 1 (default 1)
B5	Vender0	Read only	Vender Code: bit 0 (default 0)
B4	PN1	Read only	10
B3	PN0	Read only	
B2	Revision2	Read only	000: Revision 1.0
B1	Revision1	Read only	
B0(LSB)	Revision0	Read only	

Battery Termination/Fast Charge Current Register (READ/WRITE)

Memory location: 04, Reset state: 0000 0001

BIT	NAME	Read/Write	FUNCTION
B7(MSB)	Reset	Write only	Write: 1-Charger in reset mode, 0-No effect Read: always get “0”
B6	V_{ICHRG3}	Read/Write	Charge current sense voltage: 27.2mV
B5	V_{ICHRG2}	Read/Write	Charge current sense voltage: 13.6mV
B4	V_{ICHRG1}	Read/Write	Charge current sense voltage: 6.8mV
B3	V_{ICHRG0}	Read/Write	Charge current sense voltage: NA
B2	V_{ITERM2}	Read/Write	Termination current sense voltage: 13.6mV (default 0)
B1	V_{ITERM1}	Read/Write	Termination current sense voltage: 6.8mV (default 0)
B0(LSB)	V_{ITERM0}	Read/Write	Termination current sense voltage: 3.4mV (default 1)

- Charge current sense voltage offset is 37.4mV and default charge current is 550mA, if 68-mΩ sensing resistor is used and LOW_CHG=0.
- The maximum charge current is 1.25A (Rsns=68mΩ) when charging from VBUS. If a higher value is programmed, the 1.25A or maximum safety limit charge current is selected

Special Charger Voltage/Enable Pin Status Register

Memory location: 05, Reset state: 001X X100

BIT	NAME	Read/Write	FUNCTION
B7(MSB)	NA	Read/Write	NA
B6	VBUS_PRESENT	Read Only	0—VBUS not connected, 1—VBUS present
B5	LOW_CHG	Read/Write	0—Normal charge current sense voltage at 04H, 1—Low charge current sense voltage of 22.1mV (default 1)
B4	DPM_STATUS	Read Only	0—DPM mode is not active, 1—DPM mode is active
B3	VIN_PRESENT	Read Only	0—VIN not connected, 1—Vin present
B2	V_{SREG2}	Read/Write	Special charger voltage: 320 mV (default 1)
B1	V_{SREG1}	Read/Write	Special charger voltage: 160 mV (default 0)
B0(LSB)	V_{SREG0}	Read/Write	Special charger voltage: 80 mV (default 0)

- Special charger voltage offset is 4.2V and default special charger voltage is 4.52V.
- Default charge current will be 325mA, if 68-mΩ sensing resistor is used, since default LOW_CHG=1.

Copyright © 2011, Texas Instruments Incorporated

Safety Limit Register (READ/WRITE, Write only once after reset!)

Memory location: 06, Reset state: 01000000

BIT	NAME	Read/Write	FUNCTION
B7(MSB)	V_{MCHRG3}	Read/Write	Maximum charge current sense voltage: 54.4 mV (default 0)
B6	V_{MCHRG2}	Read/Write	Maximum charge current sense voltage: 27.2 mV (default 1)
B5	V_{MCHRG1}	Read/Write	Maximum charge current sense voltage: 13.6 mV (default 0)
B4	V_{MCHRG0}	Read/Write	Maximum charge current sense voltage: 6.8 mV (default 0)
B3	V_{MREG3}	Read/Write	Maximum battery regulation voltage: 160 mV (default 0)
B2	V_{MREG2}	Read/Write	Maximum battery regulation voltage: 80 mV (default 0)
B1	V_{MREG1}	Read/Write	Maximum battery regulation voltage: 40 mV (default 0)
B0(LSB)	V_{MREG0}	Read/Write	Maximum battery regulation voltage: 20 mV (default 0)

- Maximum charge current sense voltage offset is 550mA (default at 950mA) and the maximum charge current option is 1.55A, if 68-mΩ sensing resistor is used.
- Maximum battery regulation voltage offset is 4.2V (default at 4.2V) and maximum battery regulation voltage option is 4.44V.

LED Configuration Register

Memory location: 07, Reset state: 10000010

BIT	NAME	Read/Write	FUNCTION
B7(MSB)	ILED1	Read/Write	00 – LED Off 01 – LED current 1.25mA 10 – LED current 2.5mA (default) 11 – LED current 5mA
B6	ILED0	Read/Write	
B5	NA	Read Only	Returns 0
B4	LED_CTRL	Read/Write	0 – LED On when charging is Active (default) 1 – LED On regardless of charging status
B3	t_LEDON1	Read/Write	00 – LED On time 130ms (default) 01 – LED On time 260ms 10 – LED On time 520ms 11 – LED Constant On
B2	t_LEDON0	Read/Write	
B1	t_LEDOFF1	Read/Write	00 – LED Off time 390ms 01 – LED Off time 780ms 10 – LED Off time 1560ms (default) 11 – LED Off time 3120ms
B0(LSB)	t_LEDOFF0	Read/Write	

Copyright © 2011, Texas Instruments Incorporated

For I2C address 6AH (AC Charger)

Status/Control Register (READ/WRITE)

Memory location: 00, Reset state: x1xx 0xxx

BIT	NAME	Read/Write	FUNCTION
B7(MSB)	TMR_RST/OTG	Read/Write	Write: TMR_RST function, write “1” to reset the safety timer (auto clear) Read: SLRST pin status, 0-SLRST pin at LOW level, 1-SLRST pin at HIGH level.
B6	EN_STAT	Read/Write	0-Disable STAT pin function, 1-Enable STAT pin function (default 1)
B5	STAT2	Read only	00-Ready, 01-Charge in progress, 10-Charge done, 11-Fault
B4	STAT1	Read only	
B3	NA	Read only	NA
B2	FAULT_3	Read only	Charge mode: 000-Normal, 001-VBUS OVP, 010-Sleep mode, 011-Bad Adaptor or VBUS<VUVLO, 100-Output OVP, 101-Thermal shutdown, 110-Timer fault, 111-No battery
B1	FAULT_2	Read only	
B0(LSB)	FAULT_1	Read only	

Control Register (READ/WRITE)

Memory location: 01, Reset state: 0111 0000

BIT	NAME	Read/Write	FUNCTION
B7(MSB)	Iin_Limit_2	Read/Write	00-USB host with 100-mA current limit, 01-USB host with 500-mA current limit, 10-USB host/charger with 800-mA current limit, 11-No input current limit (default 01)
B6	Iin_Limit_1	Read/Write	
B5	VLOWV_2 (1)	Read/Write	200mV weak battery voltage threshold (default 1)
B4	VLOWV_1 (1)	Read/Write	100mV weak battery voltage threshold (default 1)
B3	TE	Read/Write	1-Enable charge current termination, 0-Disable charge current termination (default 0)
B2	/CE	Read/Write	1-Charger is disabled, 0-Charger enabled (default 0)
B1	HZ_MODE	Read/Write	1-High impedance mode, 0-Not high impedance mode (default 0)
B0(LSB)	NA	Read/Write	NA

(1) The range of weak battery voltage threshold (VLOWV) is 3.4V–3.7V with the offset of 3.4V and step of 100mV (default 3.7V).

Control/Battery Voltage Register (READ/WRITE)

Memory location: 02, Reset state: 0000 1010

BIT	**NAME**	**Read/Write**	**FUNCTION**
B7(MSB)	V_{OREG5}	Read/Write	Battery Regulation Voltage: 640 mV (default 0)
B6	V_{OREG4}	Read/Write	Battery Regulation Voltage: 320 mV (default 0)
B5	V_{OREG3}	Read/Write	Battery Regulation Voltage: 160 mV (default 0)
B4	V_{OREG2}	Read/Write	Battery Regulation Voltage: 80 mV (default 0)
B3	V_{OREG1}	Read/Write	Battery Regulation Voltage: 40 mV (default 1)
B2	V_{OREG0}	Read/Write	Battery Regulation Voltage: 20 mV (default 0)
B1	NA	Read/Write	NA
B0(LSB)	NA	Read/Write	NA

- Charge voltage range is 3.5V–4.44V with the offset of 3.5V and step of 20mV (default 3.54V).

Copyright © 2011, Texas Instruments Incorporated

Vender/Part/Revision Register (READ only)

Memory location: 03, Reset state: 0100 0000

BIT	NAME	Read/Write	FUNCTION
B7(MSB)	Vender2	Read only	Vender Code: bit 2 (default 0)
B6	Vender1	Read only	Vender Code: bit 1 (default 1)
B5	Vender0	Read only	Vender Code: bit 0 (default 0)
B4	PN1	Read only	00
B3	PN0	Read only	
B2	Revision2	Read only	000: Revision 1.0
B1	Revision1	Read only	
B0(LSB)	Revision0	Read only	

Battery Termination/Fast Charge Current Register (READ/WRITE)

Memory location: 04, Reset state: 0000 0001

BIT	NAME	Read/Write	FUNCTION
B7(MSB)	Reset	Write only	Write: 1-Charger in reset mode, 0-No effect Read: always get “0”
B6	VICHRG3	Read/Write	Charge current sense voltage: 54.4 mV (default 0)
B5	VICHRG2	Read/Write	Charge current sense voltage: 27.2 mV (default 0)
B4	VICHRG1	Read/Write	Charge current sense voltage: 13.6 mV (default 0)
B3	VICHRG0	Read/Write	Charge current sense voltage: 6.8 mV (default 0)
B2	VITERM2	Read/Write	Termination current sense voltage: 13.6 mV (default 0)
B1	VITERM1	Read/Write	Termination current sense voltage: 6.8 mV (default 0)
B0(LSB)	VITERM0	Read/Write	Termination current sense voltage: 3.4 mV (default 1)

- Charge current sense voltage offset is 37.4mV and default charge current is 550mA, if 68-mΩ sensing resistor is used and LOW_CHG=0.
- The maximum charge current is 1.55A when charging from VIN. If a higher value is programmed, the 1.55A or maximum safety limit charge current is selected.

Special Charger Voltage/Enable Pin Status Register

Memory location: 05, Reset state: 001X X100

BIT	NAME	Read/Write	FUNCTION
B7(MSB)	NA	Read/Write	NA
B6	VIN_PRESENT	Read Only	0—VIN not connected, 1—Vin present
B5	LOW_CHG	Read/Write	0—Normal charge current sense voltage at 04H, 1—Low charge current sense voltage of 22.1mV (default 1)
B4	DPM_STATUS	Read Only	0—DPM mode is not active, 1—DPM mode is active
B3	CD_STATUS	Read Only	0—CD pin at LOW level, 1—CD pin at HIGH level
B2	V_{SREG2}	Read/Write	Special charger voltage: 320mV (default 1)
B1	V_{SREG1}	Read/Write	Special charger voltage: 160mV (default 0)
B0(LSB)	V_{SREG0}	Read/Write	Special charger voltage: 80mV (default 0)

- Special charger voltage offset is 4.2V and default special charger voltage is 4.52V.
- Default charge current will be 325mA, if 68-mΩ sensing resistor is used, since default LOW_CHG=1.

Copyright © 2011, Texas Instruments Incorporated

Safety Limit Register (READ/WRITE, Write only once after reset!)

Memory location: 06, Reset state: 01000000

BIT	NAME	Read/Write	FUNCTION
B7(MSB)	V_{MCHRG3}	Read/Write	Maximum charge current sense voltage: 54.4 mV (default 0)
B6	V_{MCHRG2}	Read/Write	Maximum charge current sense voltage: 27.2 mV (default 1)
B5	V_{MCHRG1}	Read/Write	Maximum charge current sense voltage: 13.6 mV (default 0)
B4	V_{MCHRG0}	Read/Write	Maximum charge current sense voltage: 6.8 mV (default 0)
B3	V_{MREG3}	Read/Write	Maximum battery regulation voltage: 160 mV (default 0)
B2	V_{MREG2}	Read/Write	Maximum battery regulation voltage: 80 mV (default 0)
B1	V_{MREG1}	Read/Write	Maximum battery regulation voltage: 40 mV (default 0)
B0(LSB)	V_{MREG0}	Read/Write	Maximum battery regulation voltage: 20 mV (default 0)

- Maximum charge current sense voltage offset is 550mA (default at 950mA) and the maximum charge current option is 1.55A, if 68-mΩ sensing resistor is used.
- Maximum battery regulation voltage offset is 4.2V (default at 4.2V) and maximum battery regulation voltage option is 4.44V.
- Memory location 06 resets only when VBAT voltage drops below V_{SHORT} threshold (typ.2.05V) or SLRST (pin C3) goes to logic ‘0’. After reset, the maximum values for battery regulation voltage and charge current can be programmed many times until any writing to other register locks the safety limits. Programmed values exclude higher values from memory locations 02 (battery regulation voltage), and from memory location 04 (Fast charge current).

  If host accesses (write command) to some other register before safety limit register, the default values hold!

LED Configuration Register

Memory location: 07, Reset state: 10000010

BIT	NAME	Read/Write	FUNCTION
B7(MSB)	ILED1	Read/Write	00 – LED Off 01 – LED current 1.25 mA 10 – LED current 2.5 mA (default) 11 – LED current mA
B6	ILED0	Read/Write	
B5	NA	Read Only	Returns 0
B4	LED_CTRL	Read/Write	0 – LED On when charging is Active (default) 1 – LED On regardless of charging status
B3	$t_LED_{ON}1$	Read/Write	00 – LED On time 13 ms (default) 01 – LED On time 260 ms 10 – LED On time 520 ms 11 – LED Constant On
B2	$t_LED_{ON}0$	Read/Write	
B1	$t_LED_{OFF}1$	Read/Write	00 – LED Off time 390 ms 01 – LED Off time 780 ms 10 – LED Off time 1560 ms (default) 11 – LED Off time 3120 ms
B0(LSB)	$t_LED_{OFF}0$	Read/Write	

Copyright © 2011, Texas Instruments Incorporated

APPLICATION SECTION

Charge Current Sensing Resistor Selection Guidelines

Both the termination current range and charge current range depend on the sensing resistor (R_{SNS}). The termination current step (I_{OTERM_STEP}) can be calculated using Equation 1:

$$I_{O(TERM_STEP)} = \frac{V_{I(TERM0)}}{R_{(SNS)}} \tag{1}$$

Table 2 shows the termination current settings for three sensing resistors.

Table 2. Termination Current Settings for 55-mΩ, 68-mΩ, 100-mΩ Sense Resistors

BIT	$V_{I(TERM)}$ (mV)	$I_{(TERM)}$ (mA) $R_{(SNS)}$ = 55mΩ	$I_{(TERM)}$ (mA) $R_{(SNS)}$ = 68mΩ	$I_{(TERM)}$ (mA) $R_{(SNS)}$ = 100mΩ
$V_{I(TERM2)}$	13.6	247	200	136
$V_{I(TERM1)}$	6.8	124	100	68
$V_{I(TERM0)}$	3.4	62	50	34
Offset	3.4	62	50	34

The charge current step ($I_{O(CHARGE_STEP)}$) is calculated using Equation 2:

$$I_{O(CHARGE_STEP)} = \frac{V_{I(CHRG0)}}{R_{(SNS)}} \tag{2}$$

Table 3 shows the charge current settings for three sensing resistors.

Table 3. Charge Current Settings for 55-mΩ, 68-mΩ and 100-mΩ Sense Resistors

BIT	$V_{I(REG)}$ (mV)	$I_{O(CHARGE)}$ (mA) $R_{(SNS)}$ = 55mΩ	$I_{O(CHARGE)}$ (mA) $R_{(SNS)}$ = 68mΩ	$I_{O(CHARGE)}$ (mA) $R_{(SNS)}$ = 100mΩ
$V_{I(CHRG3)}$	54.4	989	800	544
$V_{I(CHRG2)}$	27.2	495	400	272
$V_{I(CHRG1)}$	13.6	247	200	136
$V_{I(CHRG0)}$	6.8	124	100	68
Offset	37.4	680	550	374

Output Inductor and Capacitance Selection Guidelines

The IC provides internal loop compensation. With the internal loop compensation, the highest stability occurs when the LC resonant frequency, f_o, is approximately 40 kHz (20 kHz to 80 kHz). Equation 3 can be used to calculate the value of the output inductor, L_{OUT}, and output capacitor, C_{OUT}.

$$f_o = \frac{1}{2\pi \times \sqrt{L_{OUT} \times C_{OUT}}} \tag{3}$$

To reduce the output voltage ripple, a ceramic capacitor with the capacitance between 4.7 µF and 47 µF is recommended for C_{OUT}, see the application section for components selection.

Copyright © 2011, Texas Instruments Incorporated

POWER TOPOLOGIES

System Load After Sensing Resistor

One of the simpler high-efficiency topologies connects the system load directly across the battery pack, as shown in Figure 21. The input voltage has been converted to a usable system voltage with good efficiency from the input. When the input power is on, it supplies the system load and charges the battery pack at the same time. When the input power is off, the battery pack powers the system directly.

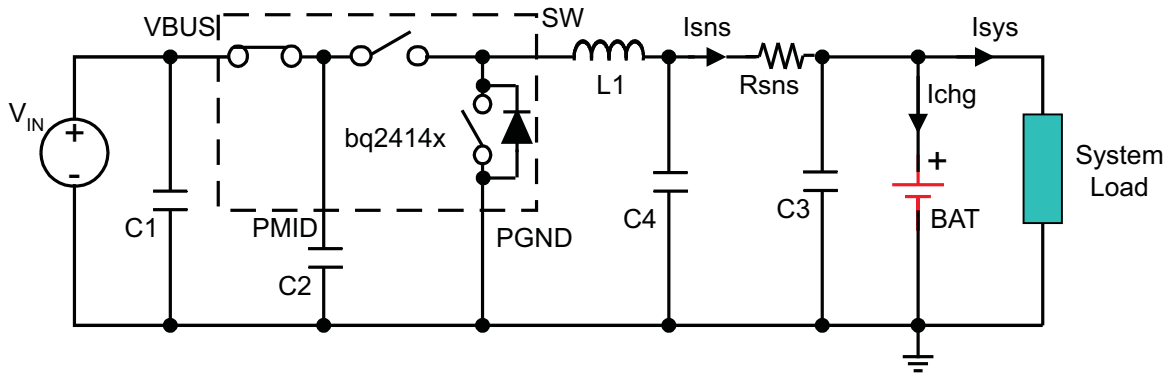

Figure 21. System Load After Sensing Resistor

The advantages:

1. When the AC adapter is disconnected, the battery pack powers the system load with minimum power dissipation. Consequently, the time that the system runs on the battery pack can be maximized.
2. It reduces the number of external path selection components and offers a low-cost solution.
3. Dynamic power management (DPM) can be achieved. The total of the charge current and the system current can be limited to a desired value by setting the charge current value. When the system current increases, the charge current drops by the same amount. As a result, no potential over-current or over-heating issues are caused by excessive system load demand.
4. The total input current can be limited to a desired value by setting the input current limit value. USB specifications can be met easily.
5. The supply voltage variation range for the system can be minimized.
6. The input current soft-start can be achieved by the generic soft-start feature of the IC.

Design considerations and potential issues:

1. If the system always demands a high current (but lower than the regulation current), the battery charging never terminates. Thus, the battery is always charged, and its lifetime may be reduced.
2. Because the total current regulation threshold is fixed and the system always demands some current, the battery may not be charged with a full-charge rate and thus may lead to a longer charge time.
3. If the system load current is large after the charger has been terminated, the IR drop across the battery impedance may cause the battery voltage to drop below the refresh threshold and start a new charge cycle. The charger would then terminate due to low charge current. Therefore, the charger would cycle between charging and terminating. If the load is smaller, the battery has to discharge down to the refresh threshold, resulting in a much slower cycling.
4. In a charger system, the charge current is typically limited to about 30mA, if the sensed battery voltage is below 2V short circuit protection threshold. This results in low power availability at the system bus. If an external supply is connected and the battery is deeply discharged, below the short circuit protection threshold, the charge current is clamped to the short circuit current limit. This then is the current available to the system during the power-up phase. Most systems cannot function with such limited supply current, and the battery supplements the additional power required by the system. Note that the battery pack is already at the depleted condition, and it discharges further until the battery protector opens, resulting in a system shutdown.
5. If the battery is below the short circuit threshold and the system requires a bias current budget lower than the short circuit current limit, the end-equipment will be operational, but the charging process can be affected

Copyright © 2011, Texas Instruments Incorporated

depending on the current left to charge the battery pack. Under extreme conditions, the system current is close to the short circuit current levels and the battery may not reach the fast-charge region in a timely manner. As a result, the safety timers flag the battery pack as defective, terminating the charging process. Because the safety timer cannot be disabled, the inserted battery pack must not be depleted to make the application possible.

6. If the battery pack voltage is too low, highly depleted, totally dead or even shorted, the system voltage is clamped by the battery and it cannot operate even if the input power is on.

System Load Before Sensing Resistor

The second circuit is similar to first one; the difference is that the system load is connected before the sense resistor, as shown in Figure 22.

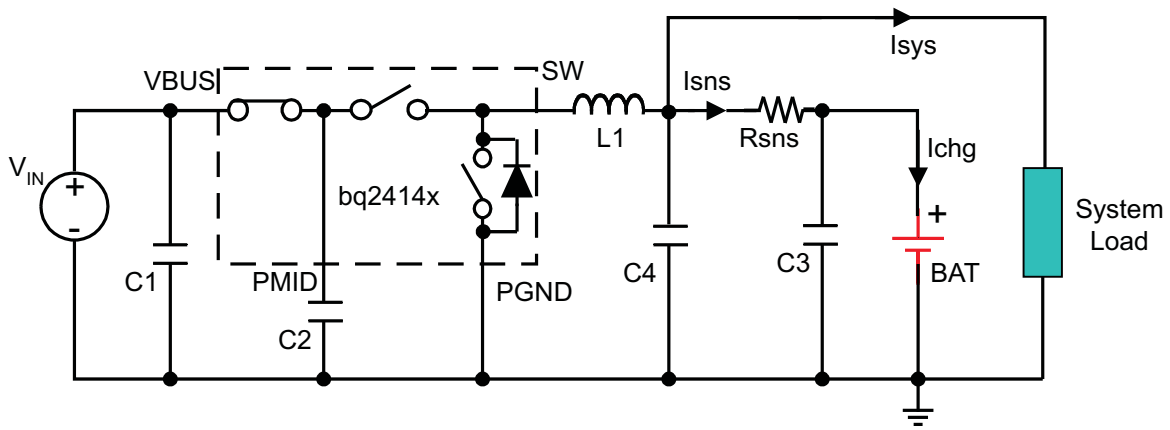

Figure 22. System Load Before Sensing Resistor

The advantages of system load before sensing resistor to system load after sensing resistor:

1. The charger controller is based only on the current going through the current-sense resistor. So, the constant current fast charge and termination functions operate without being affected by the system load. This is the major advantage of having the system load connected before the sense resistor.
2. A depleted battery pack can be connected to the charger without the risk of the safety timer expiration caused by high system load.
3. The charger can disable termination and keep the converter running to keep battery fully charged; or let the switcher terminate when the battery is full and then allow the system to run off of the battery through the sense resistor.

Design considerations and potential issues:

1. The total current is limited by the IC input current limit, or peak current protection, but not the charge current setting. The charge current does not drop when the system current load increases until the input current limit is reached. This solution is not recommended if the system requires a high current.
2. Efficiency declines when discharging through the sense resistor to the system.
3. No thermal regulation. Therefore, the system design should ensure the maximum junction temperature of the IC is below 125°C during normal operation.

Copyright © 2011, Texas Instruments Incorporated

DESIGN EXAMPLE FOR TYPICAL APPLICATION CIRCUIT

Systems Design Specifications:

- VBUS = 5 V
- V_{BAT} = 4.2 V (1-Cell)
- $I_{(charge)}$ = 1.25 A
- Inductor ripple current = 30% of fast charge current

1. Determine the inductor value (L_{OUT}) for the specified charge current ripple:

$$L_{OUT} = \frac{VBAT \times (VBUS - VBAT)}{VBUS \times f \times \Delta I_L}$$

, the worst case is when battery voltage is as close as to half of the input voltage.

$$L_{OUT} = \frac{2.5 \times (5 - 2.5)}{5 \times (3 \times 10^6) \times 1.25 \times 0.3} \quad (4)$$

L_{OUT} = 1.11 µH

Select the output inductor to standard 1 µH. Calculate the total ripple current with using the 1-µH inductor:

$$\Delta I_L = \frac{VBAT \times (VBUS - VBAT)}{VBUS \times f \times L_{OUT}} \quad (5)$$

$$\Delta I_L = \frac{2.5 \times (5 - 2.5)}{5 \times (3 \times 10^6) \times (1 \times 10^{-6})} \quad (6)$$

ΔI_L = 0.42 A

Calculate the maximum output current:

$$I_{LPK} = I_{OUT} + \frac{\Delta I_L}{2} \quad (7)$$

$$I_{LPK} = 1.25 + \frac{0.42}{2} \quad (8)$$

I_{LPK} = 1.46 A

Select 2.5mm by 2mm 1-µH 1.5-A surface mount multi-layer inductor. The suggested inductor part numbers are shown as following.

Table 4. Inductor Part Numbers

PART NUMBER	INDUCTANCE	SIZE	MANUFACTURER
LQM2HPN1R0MJ0	1 µH	2.5 x 2.0 mm	Murata
MIPS2520D1R0	1 µH	2.5 x 2.0 mm	FDK
MDT2520-CN1R0M	1 µH	2.5 x 2.0 mm	TOKO
CP1008	1 µH	2.5 x 2.0 mm	Inter-Technical

2. Determine the output capacitor value (C_{OUT}) using 40 kHz as the resonant frequency:

$$f_0 = \frac{1}{2\pi \times \sqrt{L_{OUT} \times C_{OUT}}} \tag{9}$$

$$C_{OUT} = \frac{1}{4\pi^2 \times f_0^2 \times L_{OUT}} \tag{10}$$

$$C_{OUT} = \frac{1}{4\pi^2 \times (40 \times 10^3)^2 \times (1 \times 10^{-6})} \tag{11}$$

C_{OUT} = 15.8 µF

Select two 0603 X5R 6.3V 10-µF ceramic capacitors in parallel i.e., Murata GRM188R60J106M.

3. Determine the sense resistor using the following equation:

$$R_{(SNS)} = \frac{V_{(RSNS)}}{I_{(CHARGE)}} \tag{12}$$

The maximum sense voltage across the sense resistor is 85 mV. In order to get a better current regulation accuracy, $V_{(RSNS)}$ should equal 85mV, and calculate the value for the sense resistor.

$$R_{(SNS)} = \frac{85mV}{1.25A} \tag{13}$$

$R_{(SNS)}$ = 68 mΩ

This is a standard value. If it is not a standard value, then choose the next close value and calculate the real charge current. Calculate the power dissipation on the sense resistor:

$P_{(RSNS)} = I_{(CHARGE)}{}^2 \times R_{(SNS)}$

$P_{(RSNS)} = 1.25^2 \times 0.068$

$P_{(RSNS)}$ = 0.106 W

Select 0402 0.125-W 68-mΩ 2% sense resistor, i.e. Panasonic ERJ2BWGR068.

Copyright © 2011, Texas Instruments Incorporated

PACKAGING INFORMATION

Orderable part number	Status (1)	Material type (2)	Package | Pins	Package qty | Carrier	RoHS (3)	Lead finish/ Ball material (4)	MSL rating/ Peak reflow (5)	Op temp (°C)	Part marking (6)
BQ24140YFFR	Active	Production	DSBGA (YFF) | 30	3000 | LARGE T&R	Yes	SNAGCU	Level-1-260C-UNLIM	-40 to 85	BQ24140
BQ24140YFFR.A	Active	Production	DSBGA (YFF) | 30	3000 | LARGE T&R	Yes	SNAGCU	Level-1-260C-UNLIM	-40 to 85	BQ24140
BQ24140YFFR.B	Active	Production	DSBGA (YFF) | 30	3000 | LARGE T&R	Yes	SNAGCU	Level-1-260C-UNLIM	-40 to 85	BQ24140
BQ24140YFFT	Active	Production	DSBGA (YFF) | 30	250 | SMALL T&R	Yes	SNAGCU	Level-1-260C-UNLIM	-40 to 85	BQ24140
BQ24140YFFT.A	Active	Production	DSBGA (YFF) | 30	250 | SMALL T&R	Yes	SNAGCU	Level-1-260C-UNLIM	-40 to 85	BQ24140
BQ24140YFFT.B	Active	Production	DSBGA (YFF) | 30	250 | SMALL T&R	Yes	SNAGCU	Level-1-260C-UNLIM	-40 to 85	BQ24140

(1) **Status:** For more details on status, see our product life cycle.

(2) **Material type:** When designated, preproduction parts are prototypes/experimental devices, and are not yet approved or released for full production. Testing and final process, including without limitation quality assurance, reliability performance testing, and/or process qualification, may not yet be complete, and this item is subject to further changes or possible discontinuation. If available for ordering, purchases will be subject to an additional waiver at checkout, and are intended for early internal evaluation purposes only. These items are sold without warranties of any kind.

(3) **RoHS values:** Yes, No, RoHS Exempt. See the TI RoHS Statement for additional information and value definition.

(4) **Lead finish/Ball material:** Parts may have multiple material finish options. Finish options are separated by a vertical ruled line. Lead finish/Ball material values may wrap to two lines if the finish value exceeds the maximum column width.

(5) **MSL rating/Peak reflow:** The moisture sensitivity level ratings and peak solder (reflow) temperatures. In the event that a part has multiple moisture sensitivity ratings, only the lowest level per JEDEC standards is shown. Refer to the shipping label for the actual reflow temperature that will be used to mount the part to the printed circuit board.

(6) **Part marking:** There may be an additional marking, which relates to the logo, the lot trace code information, or the environmental category of the part.

Multiple part markings will be inside parentheses. Only one part marking contained in parentheses and separated by a "~" will appear on a part. If a line is indented then it is a continuation of the previous line and the two combined represent the entire part marking for that device.

Important Information and Disclaimer: The information provided on this page represents TI's knowledge and belief as of the date that it is provided. TI bases its knowledge and belief on information provided by third parties, and makes no representation or warranty as to the accuracy of such information. Efforts are underway to better integrate information from third parties. TI has taken and continues to take reasonable steps to provide representative and accurate information but may not have conducted destructive testing or chemical analysis on incoming materials and chemicals. TI and TI suppliers consider certain information to be proprietary, and thus CAS numbers and other limited information may not be available for release.

In no event shall TI's liability arising out of such information exceed the total purchase price of the TI part(s) at issue in this document sold by TI to Customer on an annual basis.

TAPE AND REEL INFORMATION

REEL DIMENSIONS

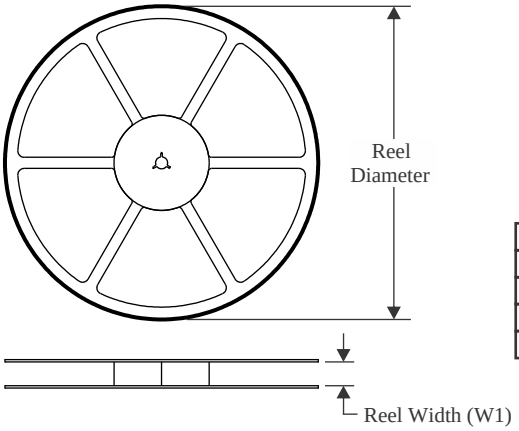

TAPE DIMENSIONS

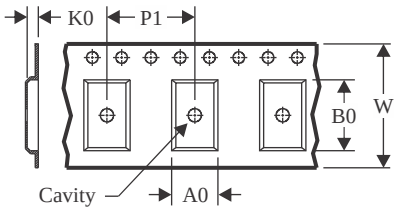

A0	Dimension designed to accommodate the component width
B0	Dimension designed to accommodate the component length
K0	Dimension designed to accommodate the component thickness
W	Overall width of the carrier tape
P1	Pitch between successive cavity centers

QUADRANT ASSIGNMENTS FOR PIN 1 ORIENTATION IN TAPE

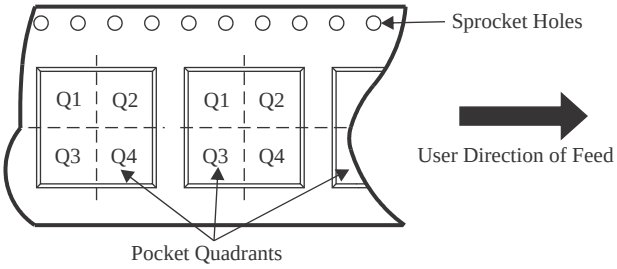

*All dimensions are nominal

Device	Package Type	Package Drawing	Pins	SPQ	Reel Diameter (mm)	Reel Width W1 (mm)	A0 (mm)	B0 (mm)	K0 (mm)	P1 (mm)	W (mm)	Pin1 Quadrant
BQ24140YFFR	DSBGA	YFF	30	3000	180.0	8.4	2.4	2.7	0.69	4.0	8.0	Q1
BQ24140YFFT	DSBGA	YFF	30	250	180.0	8.4	2.4	2.7	0.69	4.0	8.0	Q1

TAPE AND REEL BOX DIMENSIONS

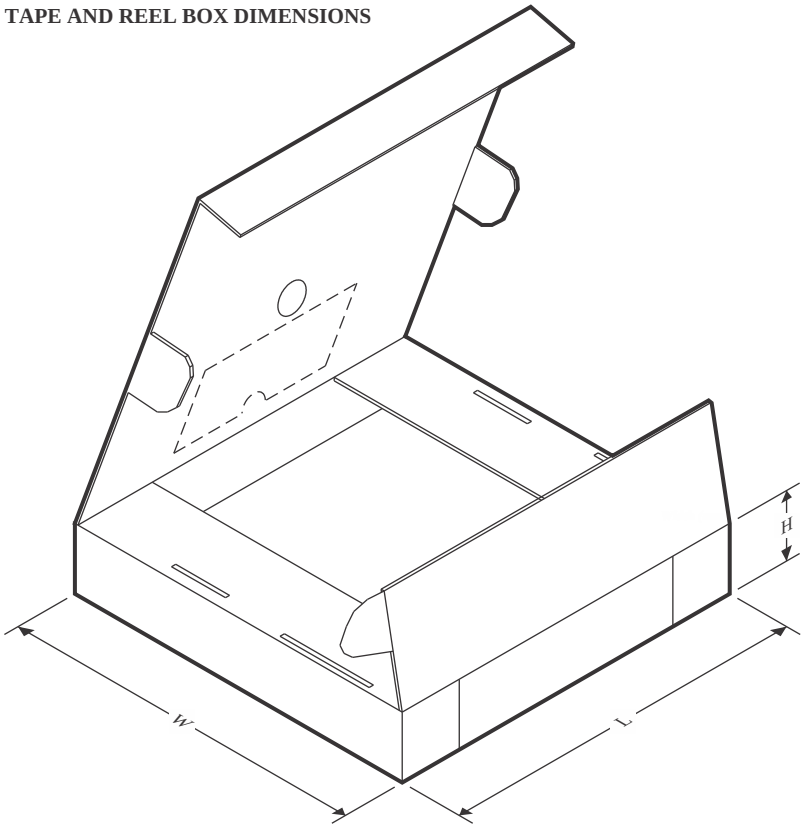

*All dimensions are nominal

Device	Package Type	Package Drawing	Pins	SPQ	Length (mm)	Width (mm)	Height (mm)
BQ24140YFFR	DSBGA	YFF	30	3000	182.0	182.0	20.0
BQ24140YFFT	DSBGA	YFF	30	250	182.0	182.0	20.0

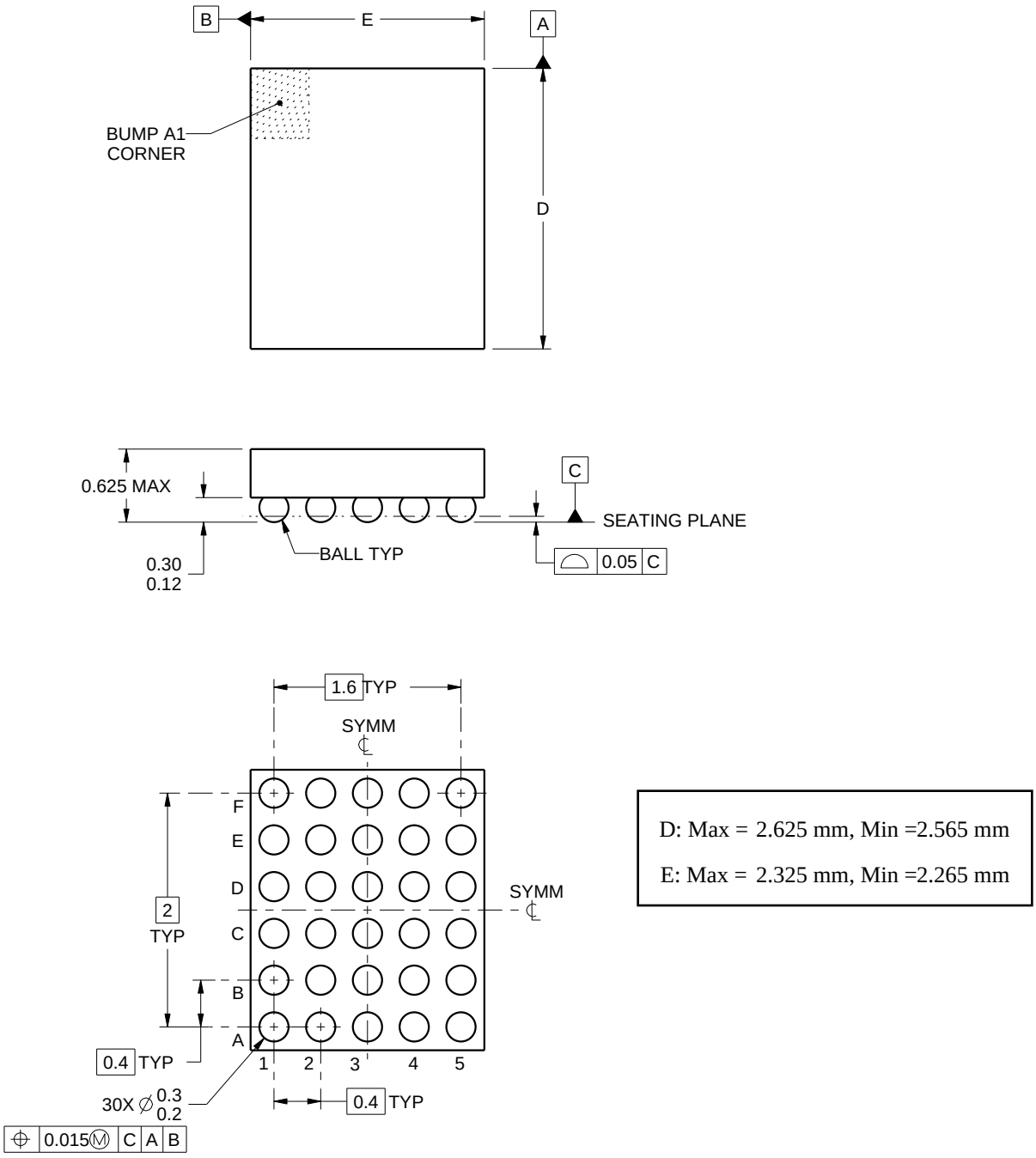

NOTES:

1. All linear dimensions are in millimeters. Any dimensions in parenthesis are for reference only. Dimensioning and tolerancing per ASME Y14.5M.
2. This drawing is subject to change without notice.

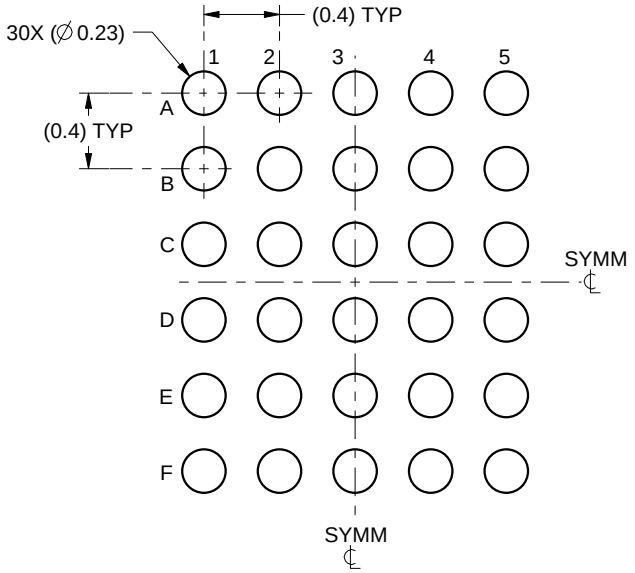

LAND PATTERN EXAMPLE
SCALE:25X

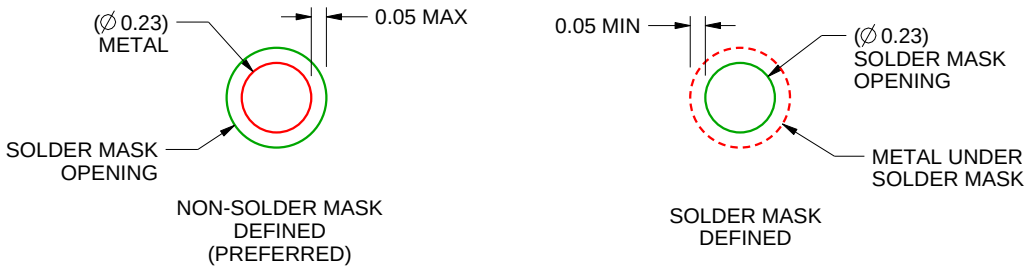

SOLDER MASK DETAILS
NOT TO SCALE

4219433/A 03/2016

NOTES: (continued)

3. Final dimensions may vary due to manufacturing tolerance considerations and also routing constraints.
   For more information, see Texas Instruments literature number SNVA009 (www.ti.com/lit/snva009).

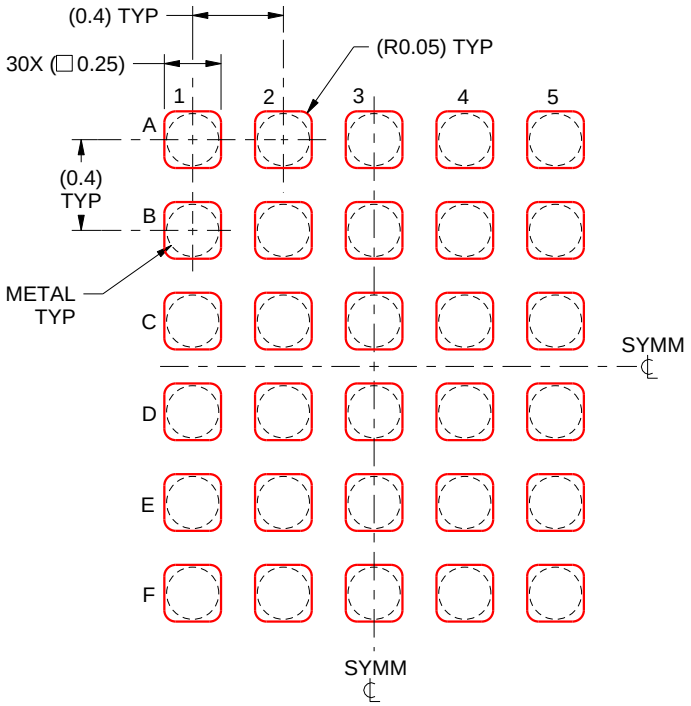

SOLDER PASTE EXAMPLE
BASED ON 0.1 mm THICK STENCIL
SCALE:30X

4219433/A 03/2016

NOTES: (continued)

4. Laser cutting apertures with trapezoidal walls and rounded corners may offer better paste release.

IMPORTANT NOTICE AND DISCLAIMER

TI PROVIDES TECHNICAL AND RELIABILITY DATA (INCLUDING DATASHEETS), DESIGN RESOURCES (INCLUDING REFERENCE DESIGNS), APPLICATION OR OTHER DESIGN ADVICE, WEB TOOLS, SAFETY INFORMATION, AND OTHER RESOURCES “AS IS” AND WITH ALL FAULTS, AND DISCLAIMS ALL WARRANTIES, EXPRESS AND IMPLIED, INCLUDING WITHOUT LIMITATION ANY IMPLIED WARRANTIES OF MERCHANTABILITY, FITNESS FOR A PARTICULAR PURPOSE OR NON-INFRINGEMENT OF THIRD PARTY INTELLECTUAL PROPERTY RIGHTS.

These resources are intended for skilled developers designing with TI products. You are solely responsible for (1) selecting the appropriate TI products for your application, (2) designing, validating and testing your application, and (3) ensuring your application meets applicable standards, and any other safety, security, regulatory or other requirements.

These resources are subject to change without notice. TI grants you permission to use these resources only for development of an application that uses the TI products described in the resource. Other reproduction and display of these resources is prohibited. No license is granted to any other TI intellectual property right or to any third party intellectual property right. TI disclaims responsibility for, and you fully indemnify TI and its representatives against any claims, damages, costs, losses, and liabilities arising out of your use of these resources.

TI’s products are provided subject to TI’s Terms of Sale, TI’s General Quality Guidelines, or other applicable terms available either on ti.com or provided in conjunction with such TI products. TI’s provision of these resources does not expand or otherwise alter TI’s applicable warranties or warranty disclaimers for TI products. Unless TI explicitly designates a product as custom or customer-specified, TI products are standard, catalog, general purpose devices.

TI objects to and rejects any additional or different terms you may propose.

Copyright © 2026, Texas Instruments Incorporated

Last updated 10/2025