参考文献

EVM User's Guide: TPS61129Q1EVM

***TPS61129-Q1** 评估模块*

说明

TPS61129Q1EVM 有助于全面评估 TPS61129-Q1 在各种操作条件下的行为和性能，包括不同的输入电压（范围从 0.9V 到 5.5V）、输出电压和负载场景。该模块可通过外部反馈电阻器配置在 2.6V 至 5.5V 的范围内调节输出电压，并具有三个支持 EN、SSEN 和 SYNC/MODE 引脚功能测试的重要跳线。

特性

- 符合面向汽车应用的 AEC-Q100 标准
  - 器件温度等级 1：–40°C 至 125°C 的环境工作温度范围
- 输出电压范围：2.6V 至 5.5V
  - 固定 5V 或可调 Vout：TPS61129-Q1
- 流入 VOUT 引脚的静态电流典型值为 5 µA
- 输出放电和窗口化功率正常 (PGOOD)
- 峰值开关电流限制：最小值 3.0A，典型值 3.5A
- 支持自动 PFM、强制 PWM 模式，并可通过 SYNC 选择

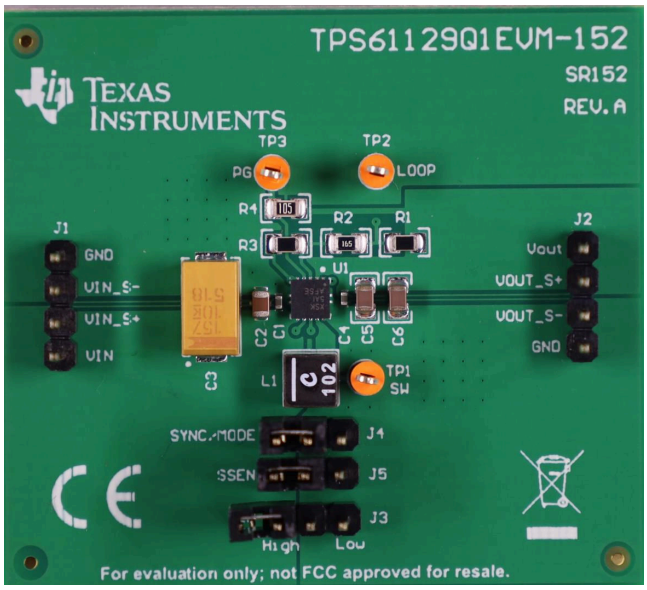

TPS61129Q1EVM

English Document: SLVUDO3
Copyright © 2026 Texas Instruments Incorporated

1 评估模块概述

1.1 简介

本用户指南介绍了 TPS61129-Q1 评估模块 (EVM) 的
设置、原理图和布局。该 EVM 有助于评估器件在不同输入电压、输出电压和负载条件下的行为和性能。

该 EVM 专为 0.9V 至 5.5V 输入电压和 5V 输出电压应用而设计。SYNC/MODE 跳线 (J4) 用于控制器件的工作模式。在轻负载条件下，该器件具有两种工作模式，可通过 SYNC/MODE 引脚进行选择。当 SYNC/MODE 连接到低电平时，器件在脉冲频率调制（自动 PFM）模式下工作，以提高轻负载效率。当 SYNC/MODE 连接至高电平时，该器件在强制 PWM 模式下工作，以避免可闻噪声并提高轻负载纹波性能。SYNC/MODE 引脚还可用于将器件的开关频率与 1.5 MHz 至 3.3 MHz 的外部时钟信号同步。该 EVM 具有分别用于 SW 电压、回路电压和电源正常指示灯电压测量的测试点 TP1、TP2 和 TP3。峰值电感器电流限制通常为 3.5A。可以根据数据表修改反馈分压器和补偿网络，以适合其他应用条件。对于固定 5V 输出运行条件，FB 引脚可直接连接到 VOUT。

TPS61129-Q1 通过 SSEN 跳线 (J5) 提供额外的展频功能，并使用三角波形来扩展开关频率，展频范围为正常频率的 ±6%。这些特性意味着，在正常 2.2MHz 开关频率下，展频功能以 9kHz 的速率呈三角波形式，在 2.07MHz 至 2.33MHz 范围内对开关频率进行调制。当 SSEN 为高电平时，会启用展频功能。当 SSEN 为低电平时，会禁用展频功能。

1.2 套件内容

表 1-1. 套件清单

位号	数量	说明	材料类型	封装
PCB1	1	TPS61129Q1EVM；电路板	EEE	塑料袋，ESD
BOX1	1	盒子，纸板	纸板	盒
FM1	2	泡沫，防静电	塑料	泡沫
LBL1	1	标签，小号和大号标准标签	纸，卡纸	纸
LIT1	1	文献，EVM 免责声明自述文件	纸，卡纸	纸
LIT2	1	文献，EVM 免责声明自述文件	纸，卡纸	纸

1.3 规格

表 1-2 汇总了 TPS61129Q1EVM 的性能规格。所有规格均为在 25°C 环境温度下的值。

表 1-2. 性能规格

参数	值	单位
输入电压	0.9 - 5.5	V
输出电压	5	V
典型峰值电流限制	3.5	A
默认开关频率	2.2	MHz

Copyright © 2026 Texas Instruments Incorporated

1.4 器件信息

TPS61129-Q1 是一款低电压同步升压转换器，配有一个 125mΩ 低侧电源开关和一个 145mΩ 高侧整流器开关，可提供高效的紧凑型设计。TPS61129-Q1 具有 3.5A（典型值）的峰值开关电流限制，并采用具有固定开关频率 2.2MHz 的峰值电流模式控制。TPS61129-Q1 具有 0.9V 至 5.5V 的宽输入电压范围，输出电压范围为 2.6V 至 5.5V，并具有可选的自动 PFM、强制 PWM 模式，或与外部时钟同步。此外，TPS61129-Q1 具有输出过压保护功能和过流保护，可防止器件过热。TPS61129-Q1 适用于由电池或其他低压电源供电的便携式设备和智能器件。TPS61129-Q1 使用内部时钟展频在 FPWM 模式下提升 EMI 性能。设有内部软启动时间来限制浪涌电流。

2 硬件

2.1 测试设置

跳线	说明
J1	输入电压正极连接和输入电压回路连接
J2	输出电压正极连接和输出电压回路连接
J3	EN 引脚输入跳线。在 EN 与高电平引脚之间连接跳线以开启 IC。使跳线跨接 EN 和低电平以关断 IC。
J4	SYNC/MODE 引脚输入跳线。在 SYNC/MODE 和波特高电平之间放置一根跳线，将器件设置为强制 PWM 模式。在 SYNC/MODE 与低电平之间连接跳线，将器件设置为自动 PFM 模式。也可以移除跳线，并通过 SYNC/MODE 同步外部时钟。
J5	SSEN 引脚输入跳线。在 SSEN 和高电平之间放置一个跳线，以启用展频调制。在 SSEN 与低电平之间连接跳线以禁用展频调制。
TP1	测量 SW 引脚波形的测试点
TP2	用于波德图测量的测试点
TP3	测量电源正常指示灯电压的测试点

2.2 修改

可以修改 TPS61129-Q1 器件的外部元件，以调节输出电压和输出纹波，从而满足应用要求。

2.3 输入电容器 C3

EVM 中新增了 150μF、10V TAN 电容器 C3 作为输入电容器。为进行评估，此电容器包含在 EVM 中，但在最终应用中可能不需要。

Copyright © 2026 Texas Instruments Incorporated

3 硬件设计文件

3.1 原理图

图 3-1 展示了 TPS61129-Q1 EVM 原理图。

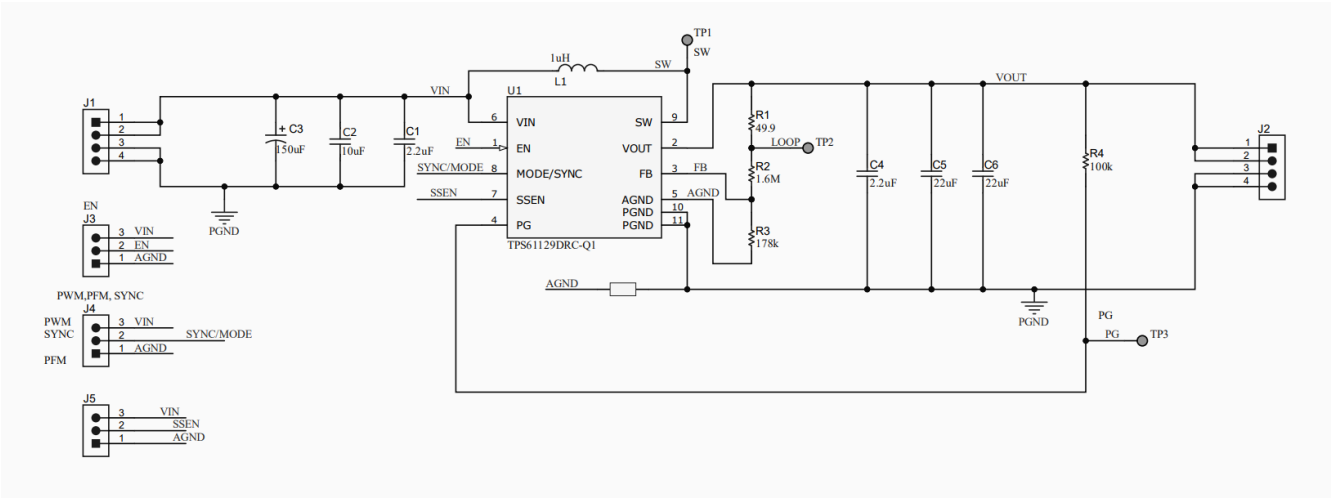

图 3-1. 原理图

Copyright © 2026 Texas Instruments Incorporated

3.2 PCB 布局

TPS61129-Q1 EVM 板是镀有 2oz 厚度铜的 2 层 PCB。所有元件均位于顶层。图 3-2 和图 3-3 分别显示了顶视图和底视图。

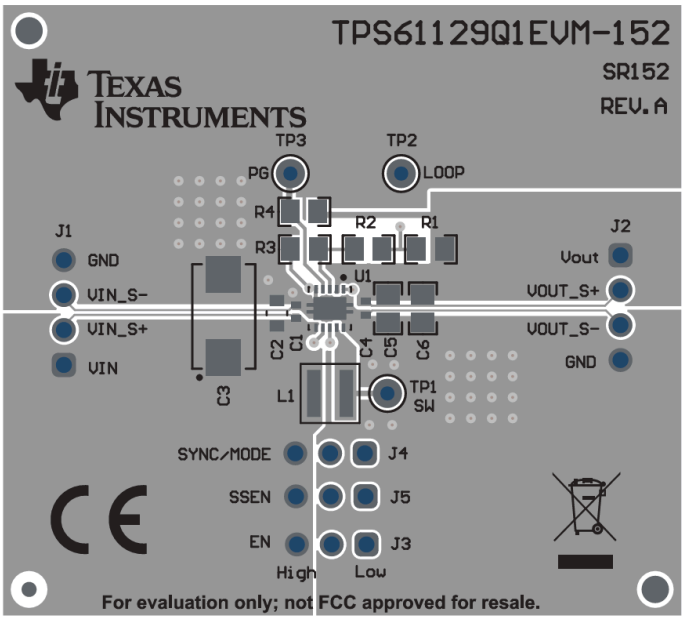

图 3-2. 顶面布局

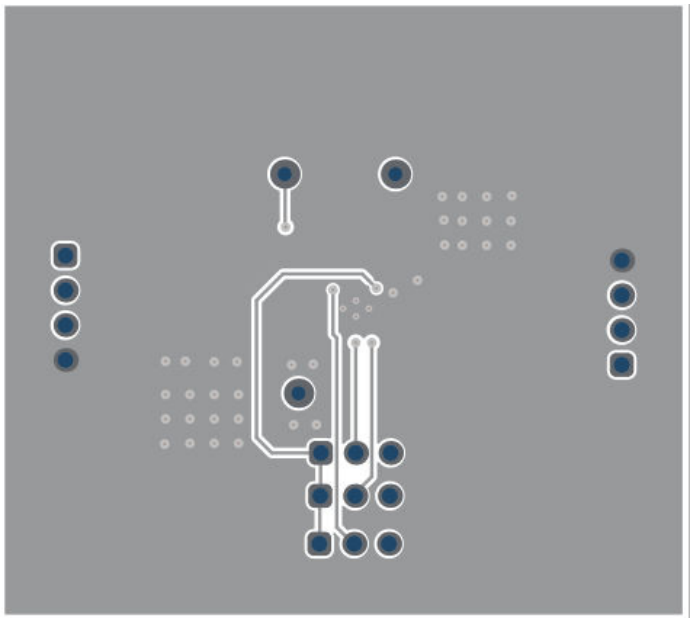

图 3-3. 底面布局

Copyright © 2026 Texas Instruments Incorporated

3.3 物料清单

表 3-1 列出了 TPS61129-Q1 EVM 的 BOM。

表 3-1. TPS61129Q1EVM 物料清单

指示符	数量	值	说明	封装参考	器件型号	制造商
C1, C4	2	2.2µF	电容，陶瓷，2.2µF，10V，+/-10%，X5R，0402	0402	CL05A225KP5NNNC	Samsung Electro-Mechanics
C2	1	10µF	电容，陶瓷，10µF，10V，+/-10%，X5R，0805	0805	CL21A106KPFNNNE	Samsung Electro-Mechanics
C3	1	150µF	电容，钽，150µF，10V，±10%，0.1ohm，SMD	7132-28	T495D157K010ATE100	Kemet
C5、C6	2	22µF	电容，陶瓷，22µF，25V，±20%，X5R，0805	0805	CL21A226MAQNNNE	Samsung Electro-Mechanics
FID1、FID2、FID3	3		基准标记。没有需要购买或安装的元件。	不适用	不适用	不适用
J1、J2	2		接头，2.54mm，4x1，金，TH	接头，2.54mm，4x1	61300411121	Wurth Elektronik
J3、J4、J5	3		接头，2.54mm，3x1，金，TH	接头，2.54mm，3x1	61300311121	Wurth Elektronik
L1	1	1µH	功率电感器，屏蔽，复合，1uH 20% 容差，DCR 7.2mΩ，SRF 65MHz，Isat 4.8A，Irms 13A，AEC-Q200	SMD — 电感器	XGL4030-102MEC	Coilcraft
R1	1	49.9Ω	电阻，49.9，1%，0.125W，0805	0805	CRCW080549R9FKEA	Vishay-Dale
R2	1	1.6MΩ	电阻，1.6M，1%，0.125W，0805	0805	CRCW08051M60FKEA	Vishay-Dale
R3	1	178kΩ	电阻，178k，1%，0.125W，0805	0805	CRCW0805178KFKEA	Vishay-Dale
R4	1	100kΩ	电阻，100k，1%，0.125W，0805	0805	CRCW0805100KFKEA	Vishay-Dale
TP1、TP2、TP3	3		测试点，微型，橙色，TH	橙色微型测试点	5003	Keystone Electronics
U1	1		采用 QFN-11、DRC0010J (VSON-11) 的可调节 3.5A 开关，96% 高效升压转换器，具有降压模式	VSON-11	TPS61129DRC-Q1	德州仪器 (TI)

Copyright © 2026 Texas Instruments Incorporated

4 其他信息

4.1 商标

所有商标均为其各自所有者的财产。

5 修订历史记录

注：以前版本的页码可能与当前版本的页码不同

Changes from Revision A (April 2026) to Revision B (October 2026) **Page**

- 通篇将 MODE 引脚更改为了 SYNC/MODE 引脚，通篇将 PFM 更改为了自动 PFM..... 1
- 使用 *PCB 布局*中的元件标记更新了顶视图..... 5
- 更新了*物料清单*内 BOM 列表中的电容器 C2 和 C5 器件型号与制造商（未更改封装）..... 6
- 在*物料清单*的 BOM 列表中将电阻器从 R3、R4、R5、R6 更改为了 R1、R2、R3、R4..... 6

Changes from Revision * (March 2026) to Revision A (April 2026) **Page**

- 将*简介* 中的展频功能从 10kHz 更改为了 9kHz.....2
- 将*器件信息* 中的 80mΩ 低侧电源开关和 120mΩ 高侧整流器开关更改为 125mΩ 低侧电源开关和 145mΩ 高侧整流器开关.....3
- 将*物料清单* U1 行中的 QFN-10 和 VSON-10 更改为 QFN-11 及 VSON-11..... 6

English Document: SLVUDO3
Copyright © 2026 Texas Instruments Incorporated

STANDARD TERMS FOR EVALUATION MODULES

1. *Delivery:* TI delivers TI evaluation boards, kits, or modules, including any accompanying demonstration software, components, and/or documentation which may be provided together or separately (collectively, an "EVM" or "EVMs") to the User ("User") in accordance with the terms set forth herein. User's acceptance of the EVM is expressly subject to the following terms.

   1.1 EVMs are intended solely for product or software developers for use in a research and development setting to facilitate feasibility evaluation, experimentation, or scientific analysis of TI semiconductors products. EVMs have no direct function and are not finished products. EVMs shall not be directly or indirectly assembled as a part or subassembly in any finished product. For clarification, any software or software tools provided with the EVM ("Software") shall not be subject to the terms and conditions set forth herein but rather shall be subject to the applicable terms that accompany such Software

   1.2 EVMs are not intended for consumer or household use. EVMs may not be sold, sublicensed, leased, rented, loaned, assigned, or otherwise distributed for commercial purposes by Users, in whole or in part, or used in any finished product or production system.

2 *Limited Warranty and Related Remedies/Disclaimers*:

   2.1 These terms do not apply to Software. The warranty, if any, for Software is covered in the applicable Software License Agreement.

   2.2 TI warrants that the TI EVM will conform to TI's published specifications for ninety (90) days after the date TI delivers such EVM to User. Notwithstanding the foregoing, TI shall not be liable for a nonconforming EVM if (a) the nonconformity was caused by neglect, misuse or mistreatment by an entity other than TI, including improper installation or testing, or for any EVMs that have been altered or modified in any way by an entity other than TI, (b) the nonconformity resulted from User's design, specifications or instructions for such EVMs or improper system design, or (c) User has not paid on time. Testing and other quality control techniques are used to the extent TI deems necessary. TI does not test all parameters of each EVM. User's claims against TI under this Section 2 are void if User fails to notify TI of any apparent defects in the EVMs within ten (10) business days after delivery, or of any hidden defects with ten (10) business days after the defect has been detected.

   2.3 TI's sole liability shall be at its option to repair or replace EVMs that fail to conform to the warranty set forth above, or credit User's account for such EVM. TI's liability under this warranty shall be limited to EVMs that are returned during the warranty period to the address designated by TI and that are determined by TI not to conform to such warranty. If TI elects to repair or replace such EVM, TI shall have a reasonable time to repair such EVM or provide replacements. Repaired EVMs shall be warranted for the remainder of the original warranty period. Replaced EVMs shall be warranted for a new full ninety (90) day warranty period.

WARNING

Evaluation Kits are intended solely for use by technically qualified, professional electronics experts who are familiar with the dangers and application risks associated with handling electrical mechanical components, systems, and subsystems.

User shall operate the Evaluation Kit within TI's recommended guidelines and any applicable legal or environmental requirements as well as reasonable and customary safeguards. Failure to set up and/or operate the Evaluation Kit within TI's recommended guidelines may result in personal injury or death or property damage. Proper set up entails following TI's instructions for electrical ratings of interface circuits such as input, output and electrical loads.

NOTE:

EXPOSURE TO ELECTROSTATIC DISCHARGE (ESD) MAY CAUSE DEGREDATION OR FAILURE OF THE EVALUATION KIT; TI RECOMMENDS STORAGE OF THE EVALUATION KIT IN A PROTECTIVE ESD BAG.

3 *Regulatory Notices:*

3.1 *United States*

3.1.1 *Notice applicable to EVMs not FCC-Approved:*

FCC NOTICE: This kit is designed to allow product developers to evaluate electronic components, circuitry, or software associated with the kit to determine whether to incorporate such items in a finished product and software developers to write software applications for use with the end product. This kit is not a finished product and when assembled may not be resold or otherwise marketed unless all required FCC equipment authorizations are first obtained. Operation is subject to the condition that this product not cause harmful interference to licensed radio stations and that this product accept harmful interference. Unless the assembled kit is designed to operate under part 15, part 18 or part 95 of this chapter, the operator of the kit must operate under the authority of an FCC license holder or must secure an experimental authorization under part 5 of this chapter.

3.1.2 *For EVMs annotated as FCC – FEDERAL COMMUNICATIONS COMMISSION Part 15 Compliant:*

CAUTION

This device complies with part 15 of the FCC Rules. Operation is subject to the following two conditions: (1) This device may not cause harmful interference, and (2) this device must accept any interference received, including interference that may cause undesired operation.

Changes or modifications not expressly approved by the party responsible for compliance could void the user's authority to operate the equipment.

FCC Interference Statement for Class A EVM devices

NOTE: This equipment has been tested and found to comply with the limits for a Class A digital device, pursuant to part 15 of the FCC Rules. These limits are designed to provide reasonable protection against harmful interference when the equipment is operated in a commercial environment. This equipment generates, uses, and can radiate radio frequency energy and, if not installed and used in accordance with the instruction manual, may cause harmful interference to radio communications. Operation of this equipment in a residential area is likely to cause harmful interference in which case the user will be required to correct the interference at his own expense.

FCC Interference Statement for Class B EVM devices

NOTE: This equipment has been tested and found to comply with the limits for a Class B digital device, pursuant to part 15 of the FCC Rules. These limits are designed to provide reasonable protection against harmful interference in a residential installation. This equipment generates, uses and can radiate radio frequency energy and, if not installed and used in accordance with the instructions, may cause harmful interference to radio communications. However, there is no guarantee that interference will not occur in a particular installation. If this equipment does cause harmful interference to radio or television reception, which can be determined by turning the equipment off and on, the user is encouraged to try to correct the interference by one or more of the following measures:

- *Reorient or relocate the receiving antenna.*
- *Increase the separation between the equipment and receiver.*
- *Connect the equipment into an outlet on a circuit different from that to which the receiver is connected.*
- *Consult the dealer or an experienced radio/TV technician for help.*

3.2 *Canada*

3.2.1 *For EVMs issued with an Industry Canada Certificate of Conformance to RSS-210 or RSS-247*

Concerning EVMs Including Radio Transmitters:

This device complies with Industry Canada license-exempt RSSs. Operation is subject to the following two conditions:

(1) this device may not cause interference, and (2) this device must accept any interference, including interference that may cause undesired operation of the device.

Concernant les EVMs avec appareils radio:

Le présent appareil est conforme aux CNR d'Industrie Canada applicables aux appareils radio exempts de licence. L'exploitation est autorisée aux deux conditions suivantes: (1) l'appareil ne doit pas produire de brouillage, et (2) l'utilisateur de l'appareil doit accepter tout brouillage radioélectrique subi, même si le brouillage est susceptible d'en compromettre le fonctionnement.

Concerning EVMs Including Detachable Antennas:

Under Industry Canada regulations, this radio transmitter may only operate using an antenna of a type and maximum (or lesser) gain approved for the transmitter by Industry Canada. To reduce potential radio interference to other users, the antenna type and its gain should be so chosen that the equivalent isotropically radiated power (e.i.r.p.) is not more than that necessary for successful communication. This radio transmitter has been approved by Industry Canada to operate with the antenna types listed in the user guide with the maximum permissible gain and required antenna impedance for each antenna type indicated. Antenna types not included in this list, having a gain greater than the maximum gain indicated for that type, are strictly prohibited for use with this device.

Concernant les EVMs avec antennes détachables

Conformément à la réglementation d'Industrie Canada, le présent émetteur radio peut fonctionner avec une antenne d'un type et d'un gain maximal (ou inférieur) approuvé pour l'émetteur par Industrie Canada. Dans le but de réduire les risques de brouillage radioélectrique à l'intention des autres utilisateurs, il faut choisir le type d'antenne et son gain de sorte que la puissance isotrope rayonnée équivalente (p.i.r.e.) ne dépasse pas l'intensité nécessaire à l'établissement d'une communication satisfaisante. Le présent émetteur radio a été approuvé par Industrie Canada pour fonctionner avec les types d'antenne énumérés dans le manuel d'usage et ayant un gain admissible maximal et l'impédance requise pour chaque type d'antenne. Les types d'antenne non inclus dans cette liste, ou dont le gain est supérieur au gain maximal indiqué, sont strictement interdits pour l'exploitation de l'émetteur

3.3 *Japan*

3.3.1 *Notice for EVMs delivered in Japan:* Please see http://www.tij.co.jp/lsds/ti_ja/general/eStore/notice_01.page 日本国内に輸入される評価用キット、ボードについては、次のところをご覧ください。

https://www.ti.com/ja-jp/legal/notice-for-evaluation-kits-delivered-in-japan.html

3.3.2 *Notice for Users of EVMs Considered "Radio Frequency Products" in Japan:* EVMs entering Japan may not be certified by TI as conforming to Technical Regulations of Radio Law of Japan.

If User uses EVMs in Japan, not certified to Technical Regulations of Radio Law of Japan, User is required to follow the instructions set forth by Radio Law of Japan, which includes, but is not limited to, the instructions below with respect to EVMs (which for the avoidance of doubt are stated strictly for convenience and should be verified by User):

1. Use EVMs in a shielded room or any other test facility as defined in the notification #173 issued by Ministry of Internal Affairs and Communications on March 28, 2006, based on Sub-section 1.1 of Article 6 of the Ministry's Rule for Enforcement of Radio Law of Japan,
2. Use EVMs only after User obtains the license of Test Radio Station as provided in Radio Law of Japan with respect to EVMs, or
3. Use of EVMs only after User obtains the Technical Regulations Conformity Certification as provided in Radio Law of Japan with respect to EVMs. Also, do not transfer EVMs, unless User gives the same notice above to the transferee. Please note that if User does not follow the instructions above, User will be subject to penalties of Radio Law of Japan.

【無線電波を送信する製品の開発キットをお使いになる際の注意事項】 開発キットの中には技術基準適合証明を受けていないものがあります。 技術適合証明を受けていないもののご使用に際しては、電波法遵守のため、以下のいずれかの措置を取っていただく必要がありますのでご注意ください。

1. 電波法施行規則第6条第1項第1号に基づく平成18年3月28日総務省告示第173号で定められた電波暗室等の試験設備でご使用いただく。
2. 実験局の免許を取得後ご使用いただく。
3. 技術基準適合証明を取得後ご使用いただく。

なお、本製品は、上記の「ご使用にあたっての注意」を譲渡先、移転先に通知しない限り、譲渡、移転できないものとします。

上記を遵守頂けない場合は、電波法の罰則が適用される可能性があることをご留意ください。 日本テキサス· インスツルメンツ株式会社

東京都新宿区西新宿６丁目２４番１号

西新宿三井ビル

3.3.3 *Notice for EVMs for Power Line Communication:* Please see http://www.tij.co.jp/lsds/ti_ja/general/eStore/notice_02.page 電力線搬送波通信についての開発キットをお使いになる際の注意事項については、次のところをご覧ください。https://www.ti.com/ja-jp/legal/notice-for-evaluation-kits-for-power-line-communication.html

3.4 *European Union*

3.4.1 *For EVMs subject to EU Directive 2014/30/EU (Electromagnetic Compatibility Directive)*:

This is a class A product intended for use in environments other than domestic environments that are connected to a low-voltage power-supply network that supplies buildings used for domestic purposes. In a domestic environment this product may cause radio interference in which case the user may be required to take adequate measures.

4 *EVM Use Restrictions and Warnings:*

4.1 EVMS ARE NOT FOR USE IN FUNCTIONAL SAFETY AND/OR SAFETY CRITICAL EVALUATIONS, INCLUDING BUT NOT LIMITED TO EVALUATIONS OF LIFE SUPPORT APPLICATIONS.

4.2 User must read and apply the user guide and other available documentation provided by TI regarding the EVM prior to handling or using the EVM, including without limitation any warning or restriction notices. The notices contain important safety information related to, for example, temperatures and voltages.

4.3 *Safety-Related Warnings and Restrictions:*

4.3.1 User shall operate the EVM within TI's recommended specifications and environmental considerations stated in the user guide, other available documentation provided by TI, and any other applicable requirements and employ reasonable and customary safeguards. Exceeding the specified performance ratings and specifications (including but not limited to input and output voltage, current, power, and environmental ranges) for the EVM may cause personal injury or death, or property damage. If there are questions concerning performance ratings and specifications, User should contact a TI field representative prior to connecting interface electronics including input power and intended loads. Any loads applied outside of the specified output range may also result in unintended and/or inaccurate operation and/or possible permanent damage to the EVM and/or interface electronics. Please consult the EVM user guide prior to connecting any load to the EVM output. If there is uncertainty as to the load specification, please contact a TI field representative. During normal operation, even with the inputs and outputs kept within the specified allowable ranges, some circuit components may have elevated case temperatures. These components include but are not limited to linear regulators, switching transistors, pass transistors, current sense resistors, and heat sinks, which can be identified using the information in the associated documentation. When working with the EVM, please be aware that the EVM may become very warm.

4.3.2 EVMs are intended solely for use by technically qualified, professional electronics experts who are familiar with the dangers and application risks associated with handling electrical mechanical components, systems, and subsystems. User assumes all responsibility and liability for proper and safe handling and use of the EVM by User or its employees, affiliates, contractors or designees. User assumes all responsibility and liability to ensure that any interfaces (electronic and/or mechanical) between the EVM and any human body are designed with suitable isolation and means to safely limit accessible leakage currents to minimize the risk of electrical shock hazard. User assumes all responsibility and liability for any improper or unsafe handling or use of the EVM by User or its employees, affiliates, contractors or designees.

4.4 User assumes all responsibility and liability to determine whether the EVM is subject to any applicable international, federal, state, or local laws and regulations related to User's handling and use of the EVM and, if applicable, User assumes all responsibility and liability for compliance in all respects with such laws and regulations. User assumes all responsibility and liability for proper disposal and recycling of the EVM consistent with all applicable international, federal, state, and local requirements.

5. *Accuracy of Information:* To the extent TI provides information on the availability and function of EVMs, TI attempts to be as accurate as possible. However, TI does not warrant the accuracy of EVM descriptions, EVM availability or other information on its websites as accurate, complete, reliable, current, or error-free.

6. *Disclaimers:*

6.1 EXCEPT AS SET FORTH ABOVE, EVMS AND ANY MATERIALS PROVIDED WITH THE EVM (INCLUDING, BUT NOT LIMITED TO, REFERENCE DESIGNS AND THE DESIGN OF THE EVM ITSELF) ARE PROVIDED "AS IS" AND "WITH ALL FAULTS." TI DISCLAIMS ALL OTHER WARRANTIES, EXPRESS OR IMPLIED, REGARDING SUCH ITEMS, INCLUDING BUT NOT LIMITED TO ANY EPIDEMIC FAILURE WARRANTY OR IMPLIED WARRANTIES OF MERCHANTABILITY OR FITNESS FOR A PARTICULAR PURPOSE OR NON-INFRINGEMENT OF ANY THIRD PARTY PATENTS, COPYRIGHTS, TRADE SECRETS OR OTHER INTELLECTUAL PROPERTY RIGHTS.

6.2 EXCEPT FOR THE LIMITED RIGHT TO USE THE EVM SET FORTH HEREIN, NOTHING IN THESE TERMS SHALL BE CONSTRUED AS GRANTING OR CONFERRING ANY RIGHTS BY LICENSE, PATENT, OR ANY OTHER INDUSTRIAL OR INTELLECTUAL PROPERTY RIGHT OF TI, ITS SUPPLIERS/LICENSORS OR ANY OTHER THIRD PARTY, TO USE THE EVM IN ANY FINISHED END-USER OR READY-TO-USE FINAL PRODUCT, OR FOR ANY INVENTION, DISCOVERY OR IMPROVEMENT, REGARDLESS OF WHEN MADE, CONCEIVED OR ACQUIRED.

7. *USER'S INDEMNITY OBLIGATIONS AND REPRESENTATIONS.* USER WILL DEFEND, INDEMNIFY AND HOLD TI, ITS LICENSORS AND THEIR REPRESENTATIVES HARMLESS FROM AND AGAINST ANY AND ALL CLAIMS, DAMAGES, LOSSES, EXPENSES, COSTS AND LIABILITIES (COLLECTIVELY, "CLAIMS") ARISING OUT OF OR IN CONNECTION WITH ANY HANDLING OR USE OF THE EVM THAT IS NOT IN ACCORDANCE WITH THESE TERMS. THIS OBLIGATION SHALL APPLY WHETHER CLAIMS ARISE UNDER STATUTE, REGULATION, OR THE LAW OF TORT, CONTRACT OR ANY OTHER LEGAL THEORY, AND EVEN IF THE EVM FAILS TO PERFORM AS DESCRIBED OR EXPECTED.

8. *Limitations on Damages and Liability:*

   8.1 *General Limitations*. IN NO EVENT SHALL TI BE LIABLE FOR ANY SPECIAL, COLLATERAL, INDIRECT, PUNITIVE, INCIDENTAL, CONSEQUENTIAL, OR EXEMPLARY DAMAGES IN CONNECTION WITH OR ARISING OUT OF THESE TERMS OR THE USE OF THE EVMS , REGARDLESS OF WHETHER TI HAS BEEN ADVISED OF THE POSSIBILITY OF SUCH DAMAGES. EXCLUDED DAMAGES INCLUDE, BUT ARE NOT LIMITED TO, COST OF REMOVAL OR REINSTALLATION, ANCILLARY COSTS TO THE PROCUREMENT OF SUBSTITUTE GOODS OR SERVICES, RETESTING, OUTSIDE COMPUTER TIME, LABOR COSTS, LOSS OF GOODWILL, LOSS OF PROFITS, LOSS OF SAVINGS, LOSS OF USE, LOSS OF DATA, OR BUSINESS INTERRUPTION. NO CLAIM, SUIT OR ACTION SHALL BE BROUGHT AGAINST TI MORE THAN TWELVE (12) MONTHS AFTER THE EVENT THAT GAVE RISE TO THE CAUSE OF ACTION HAS OCCURRED.

   8.2 *Specific Limitations.* IN NO EVENT SHALL TI'S AGGREGATE LIABILITY FROM ANY USE OF AN EVM PROVIDED HEREUNDER, INCLUDING FROM ANY WARRANTY, INDEMITY OR OTHER OBLIGATION ARISING OUT OF OR IN CONNECTION WITH THESE TERMS, , EXCEED THE TOTAL AMOUNT PAID TO TI BY USER FOR THE PARTICULAR EVM(S) AT ISSUE DURING THE PRIOR TWELVE (12) MONTHS WITH RESPECT TO WHICH LOSSES OR DAMAGES ARE CLAIMED. THE EXISTENCE OF MORE THAN ONE CLAIM SHALL NOT ENLARGE OR EXTEND THIS LIMIT.

9. *Return Policy.* Except as otherwise provided, TI does not offer any refunds, returns, or exchanges. Furthermore, no return of EVM(s) will be accepted if the package has been opened and no return of the EVM(s) will be accepted if they are damaged or otherwise not in a resalable condition. If User feels it has been incorrectly charged for the EVM(s) it ordered or that delivery violates the applicable order, User should contact TI. All refunds will be made in full within thirty (30) working days from the return of the components(s), excluding any postage or packaging costs.

10. *Governing Law:* These terms and conditions shall be governed by and interpreted in accordance with the laws of the State of Texas, without reference to conflict-of-laws principles. User agrees that non-exclusive jurisdiction for any dispute arising out of or relating to these terms and conditions lies within courts located in the State of Texas and consents to venue in Dallas County, Texas. Notwithstanding the foregoing, any judgment may be enforced in any United States or foreign court, and TI may seek injunctive relief in any United States or foreign court.

Mailing Address: Texas Instruments, Post Office Box 655303, Dallas, Texas 75265
Copyright © 2023, Texas Instruments Incorporated

重要通知和免责声明

TI“按原样”提供技术和可靠性数据（包括数据表）、设计资源（包括参考设计）、应用或其他设计建议、网络工具、安全信息和其他资源，不保证没有瑕疵且不做出任何明示或暗示的担保，包括但不限于对适销性、与某特定用途的适用性或不侵犯任何第三方知识产权的暗示担保。

这些资源可供使用 TI 产品进行设计的熟练开发人员使用。您将自行承担以下全部责任：(1) 针对您的应用选择合适的 TI 产品，(2) 设计、验证并测试您的应用，(3) 确保您的应用满足相应标准以及任何其他安全、安保法规或其他要求。

这些资源如有变更，恕不另行通知。TI 授权您仅可将这些资源用于研发本资源所述的 TI 产品的相关应用。严禁以其他方式对这些资源进行复制或展示。您无权使用任何其他 TI 知识产权或任何第三方知识产权。对于因您对这些资源的使用而对 TI 及其代表造成的任何索赔、损害、成本、损失和债务，您将全额赔偿，TI 对此概不负责。

TI 提供的产品受 TI 销售条款)、TI 通用质量指南 或 ti.com 上其他适用条款或 TI 产品随附的其他适用条款的约束。TI 提供这些资源并不会扩展或以其他方式更改 TI 针对 TI 产品发布的适用的担保或担保免责声明。 除非德州仪器 (TI) 明确将某产品指定为定制产品或客户特定产品，否则其产品均为按确定价格收入目录的标准通用器件。

TI 反对并拒绝您可能提出的任何其他或不同的条款。

版权所有 © 2026，德州仪器 (TI) 公司

最后更新日期：2025 年 10 月