TAPE AND REEL INFORMATION

REEL DIMENSIONS

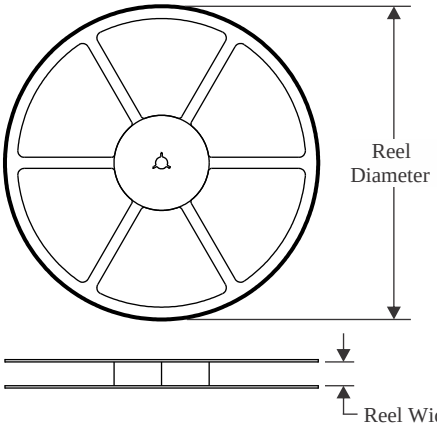

TAPE DIMENSIONS

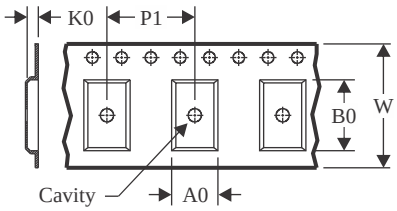

A0	Dimension designed to accommodate the component width
B0	Dimension designed to accommodate the component length
K0	Dimension designed to accommodate the component thickness
W	Overall width of the carrier tape
P1	Pitch between successive cavity centers

QUADRANT ASSIGNMENTS FOR PIN 1 ORIENTATION IN TAPE

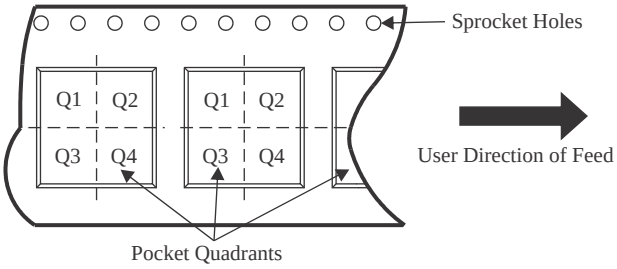

*All dimensions are nominal

Device	Package Type	Package Drawing	Pins	SPQ	Reel Diameter (mm)	Reel Width W1 (mm)	A0 (mm)	B0 (mm)	K0 (mm)	P1 (mm)	W (mm)	Pin1 Quadrant
TPS3831A09DQNR	X2SON	DQN	4	3000	180.0	9.5	1.16	1.16	0.5	4.0	8.0	Q2
TPS3831A09DQNT	X2SON	DQN	4	250	180.0	9.5	1.16	1.16	0.5	4.0	8.0	Q2
TPS3831E16DQNR	X2SON	DQN	4	3000	180.0	9.5	1.16	1.16	0.5	4.0	8.0	Q2
TPS3831E16DQNT	X2SON	DQN	4	250	180.0	9.5	1.16	1.16	0.5	4.0	8.0	Q2
TPS3831G12DQNR	X2SON	DQN	4	3000	180.0	9.5	1.16	1.16	0.5	4.0	8.0	Q2
TPS3831G12DQNT	X2SON	DQN	4	250	180.0	9.5	1.16	1.16	0.5	4.0	8.0	Q2
TPS3831G18DQNR	X2SON	DQN	4	3000	180.0	9.5	1.16	1.16	0.5	4.0	8.0	Q2
TPS3831G18DQNT	X2SON	DQN	4	250	180.0	9.5	1.16	1.16	0.5	4.0	8.0	Q2
TPS3831G33DQNR	X2SON	DQN	4	3000	180.0	9.5	1.16	1.16	0.5	4.0	8.0	Q2
TPS3831G33DQNT	X2SON	DQN	4	250	180.0	9.5	1.16	1.16	0.5	4.0	8.0	Q2
TPS3831K33DQNR	X2SON	DQN	4	3000	180.0	9.5	1.16	1.16	0.5	4.0	8.0	Q2
TPS3831K33DQNR	X2SON	DQN	4	3000	180.0	8.4	1.16	1.16	0.5	4.0	8.0	Q2
TPS3831K33DQNT	X2SON	DQN	4	250	180.0	9.5	1.16	1.16	0.5	4.0	8.0	Q2
TPS3831K33DQNT	X2SON	DQN	4	250	180.0	8.4	1.16	1.16	0.5	4.0	8.0	Q2
TPS3831K50DQNR	X2SON	DQN	4	3000	180.0	9.5	1.16	1.16	0.5	4.0	8.0	Q2
TPS3831K50DQNT	X2SON	DQN	4	250	180.0	9.5	1.16	1.16	0.5	4.0	8.0	Q2

Device	Package Type	Package Drawing	Pins	SPQ	Reel Diameter (mm)	Reel Width W1 (mm)	A0 (mm)	B0 (mm)	K0 (mm)	P1 (mm)	W (mm)	Pin1 Quadrant
TPS3831L30DQNR	X2SON	DQN	4	3000	180.0	9.5	1.16	1.16	0.5	4.0	8.0	Q2
TPS3831L30DQNT	X2SON	DQN	4	250	180.0	9.5	1.16	1.16	0.5	4.0	8.0	Q2
TPS3839A09DBZR	SOT-23	DBZ	3	3000	179.0	8.4	3.15	2.95	1.22	4.0	8.0	Q3
TPS3839A09DBZT	SOT-23	DBZ	3	250	179.0	8.4	3.15	2.95	1.22	4.0	8.0	Q3
TPS3839A09DQNR	X2SON	DQN	4	3000	180.0	9.5	1.16	1.16	0.5	4.0	8.0	Q2
TPS3839A09DQNT	X2SON	DQN	4	250	180.0	9.5	1.16	1.16	0.5	4.0	8.0	Q2
TPS3839E16DBZR	SOT-23	DBZ	3	3000	179.0	8.4	3.15	2.95	1.22	4.0	8.0	Q3
TPS3839E16DBZT	SOT-23	DBZ	3	250	179.0	8.4	3.15	2.95	1.22	4.0	8.0	Q3
TPS3839E16DQNR	X2SON	DQN	4	3000	180.0	9.5	1.16	1.16	0.5	4.0	8.0	Q2
TPS3839E16DQNT	X2SON	DQN	4	250	180.0	9.5	1.16	1.16	0.5	4.0	8.0	Q2
TPS3839G12DBZR	SOT-23	DBZ	3	3000	179.0	8.4	3.15	2.95	1.22	4.0	8.0	Q3
TPS3839G12DBZT	SOT-23	DBZ	3	250	179.0	8.4	3.15	2.95	1.22	4.0	8.0	Q3
TPS3839G12DQNR	X2SON	DQN	4	3000	180.0	9.5	1.16	1.16	0.5	4.0	8.0	Q2
TPS3839G12DQNR	X2SON	DQN	4	3000	180.0	8.4	1.16	1.16	0.5	4.0	8.0	Q2
TPS3839G12DQNT	X2SON	DQN	4	250	180.0	9.5	1.16	1.16	0.5	4.0	8.0	Q2
TPS3839G12DQNT	X2SON	DQN	4	250	180.0	8.4	1.16	1.16	0.5	4.0	8.0	Q2
TPS3839G18DBZR	SOT-23	DBZ	3	3000	179.0	8.4	3.15	2.95	1.22	4.0	8.0	Q3
TPS3839G18DBZT	SOT-23	DBZ	3	250	179.0	8.4	3.15	2.95	1.22	4.0	8.0	Q3
TPS3839G18DQNR	X2SON	DQN	4	3000	180.0	9.5	1.16	1.16	0.5	4.0	8.0	Q2
TPS3839G18DQNT	X2SON	DQN	4	250	180.0	9.5	1.16	1.16	0.5	4.0	8.0	Q2
TPS3839G25DBZR	SOT-23	DBZ	3	3000	179.0	8.4	3.15	2.95	1.22	4.0	8.0	Q3
TPS3839G25DBZT	SOT-23	DBZ	3	250	179.0	8.4	3.15	2.95	1.22	4.0	8.0	Q3
TPS3839G33DBZR	SOT-23	DBZ	3	3000	179.0	8.4	3.15	2.95	1.22	4.0	8.0	Q3
TPS3839G33DBZT	SOT-23	DBZ	3	250	179.0	8.4	3.15	2.95	1.22	4.0	8.0	Q3
TPS3839G33DQNR	X2SON	DQN	4	3000	180.0	9.5	1.16	1.16	0.5	4.0	8.0	Q2
TPS3839G33DQNT	X2SON	DQN	4	250	180.0	9.5	1.16	1.16	0.5	4.0	8.0	Q2
TPS3839K33DBZR	SOT-23	DBZ	3	3000	179.0	8.4	3.15	2.95	1.22	4.0	8.0	Q3
TPS3839K33DBZT	SOT-23	DBZ	3	250	179.0	8.4	3.15	2.95	1.22	4.0	8.0	Q3
TPS3839K33DQNR	X2SON	DQN	4	3000	180.0	9.5	1.16	1.16	0.5	4.0	8.0	Q2
TPS3839K33DQNT	X2SON	DQN	4	250	180.0	9.5	1.16	1.16	0.5	4.0	8.0	Q2
TPS3839K50DBZR	SOT-23	DBZ	3	3000	179.0	8.4	3.15	2.95	1.22	4.0	8.0	Q3
TPS3839K50DBZT	SOT-23	DBZ	3	250	179.0	8.4	3.15	2.95	1.22	4.0	8.0	Q3
TPS3839K50DQNR	X2SON	DQN	4	3000	180.0	9.5	1.16	1.16	0.5	4.0	8.0	Q2
TPS3839K50DQNT	X2SON	DQN	4	250	180.0	9.5	1.16	1.16	0.5	4.0	8.0	Q2
TPS3839L30DBZR	SOT-23	DBZ	3	3000	179.0	8.4	3.15	2.95	1.22	4.0	8.0	Q3
TPS3839L30DBZT	SOT-23	DBZ	3	250	179.0	8.4	3.15	2.95	1.22	4.0	8.0	Q3
TPS3839L30DQNR	X2SON	DQN	4	3000	180.0	9.5	1.16	1.16	0.5	4.0	8.0	Q2
TPS3839L30DQNT	X2SON	DQN	4	250	180.0	9.5	1.16	1.16	0.5	4.0	8.0	Q2

TAPE AND REEL BOX DIMENSIONS

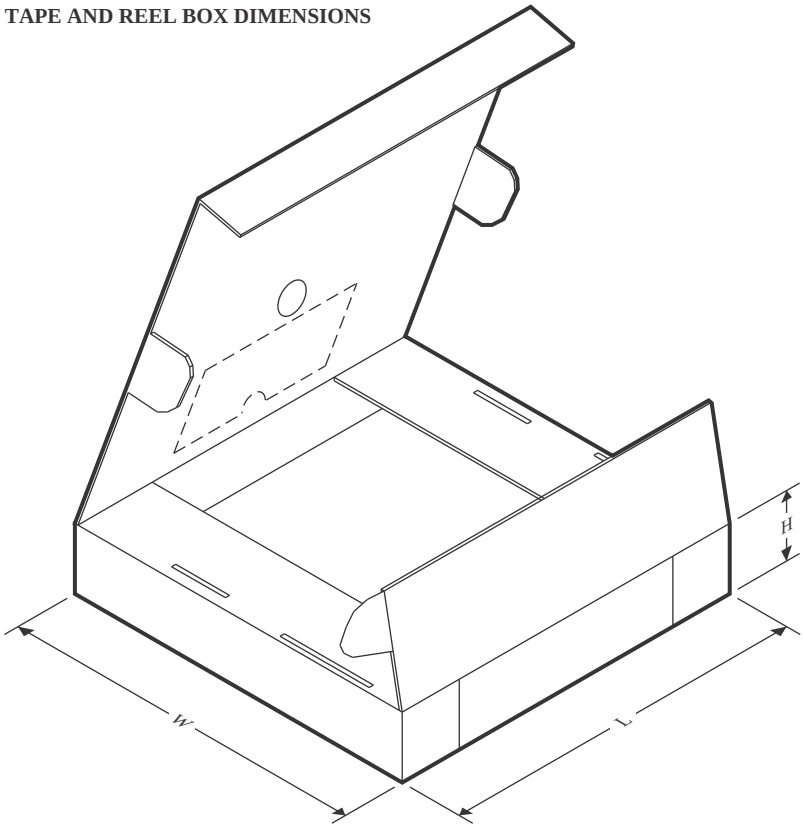

*All dimensions are nominal

Device	Package Type	Package Drawing	Pins	SPQ	Length (mm)	Width (mm)	Height (mm)
TPS3831A09DQNR	X2SON	DQN	4	3000	184.0	184.0	19.0
TPS3831A09DQNT	X2SON	DQN	4	250	184.0	184.0	19.0
TPS3831E16DQNR	X2SON	DQN	4	3000	184.0	184.0	19.0
TPS3831E16DQNT	X2SON	DQN	4	250	184.0	184.0	19.0
TPS3831G12DQNR	X2SON	DQN	4	3000	184.0	184.0	19.0
TPS3831G12DQNT	X2SON	DQN	4	250	184.0	184.0	19.0
TPS3831G18DQNR	X2SON	DQN	4	3000	184.0	184.0	19.0
TPS3831G18DQNT	X2SON	DQN	4	250	184.0	184.0	19.0
TPS3831G33DQNR	X2SON	DQN	4	3000	184.0	184.0	19.0
TPS3831G33DQNT	X2SON	DQN	4	250	184.0	184.0	19.0
TPS3831K33DQNR	X2SON	DQN	4	3000	184.0	184.0	19.0
TPS3831K33DQNR	X2SON	DQN	4	3000	210.0	185.0	35.0
TPS3831K33DQNT	X2SON	DQN	4	250	184.0	184.0	19.0
TPS3831K33DQNT	X2SON	DQN	4	250	210.0	185.0	35.0
TPS3831K50DQNR	X2SON	DQN	4	3000	184.0	184.0	19.0
TPS3831K50DQNT	X2SON	DQN	4	250	184.0	184.0	19.0
TPS3831L30DQNR	X2SON	DQN	4	3000	184.0	184.0	19.0
TPS3831L30DQNT	X2SON	DQN	4	250	184.0	184.0	19.0

Device	Package Type	Package Drawing	Pins	SPQ	Length (mm)	Width (mm)	Height (mm)
TPS3839A09DBZR	SOT-23	DBZ	3	3000	203.0	203.0	35.0
TPS3839A09DBZT	SOT-23	DBZ	3	250	200.0	183.0	25.0
TPS3839A09DQNR	X2SON	DQN	4	3000	184.0	184.0	19.0
TPS3839A09DQNT	X2SON	DQN	4	250	184.0	184.0	19.0
TPS3839E16DBZR	SOT-23	DBZ	3	3000	200.0	183.0	25.0
TPS3839E16DBZT	SOT-23	DBZ	3	250	200.0	183.0	25.0
TPS3839E16DQNR	X2SON	DQN	4	3000	184.0	184.0	19.0
TPS3839E16DQNT	X2SON	DQN	4	250	184.0	184.0	19.0
TPS3839G12DBZR	SOT-23	DBZ	3	3000	200.0	183.0	25.0
TPS3839G12DBZT	SOT-23	DBZ	3	250	203.0	203.0	35.0
TPS3839G12DQNR	X2SON	DQN	4	3000	184.0	184.0	19.0
TPS3839G12DQNR	X2SON	DQN	4	3000	210.0	185.0	35.0
TPS3839G12DQNT	X2SON	DQN	4	250	184.0	184.0	19.0
TPS3839G12DQNT	X2SON	DQN	4	250	210.0	185.0	35.0
TPS3839G18DBZR	SOT-23	DBZ	3	3000	200.0	183.0	25.0
TPS3839G18DBZT	SOT-23	DBZ	3	250	203.0	203.0	35.0
TPS3839G18DQNR	X2SON	DQN	4	3000	184.0	184.0	19.0
TPS3839G18DQNT	X2SON	DQN	4	250	184.0	184.0	19.0
TPS3839G25DBZR	SOT-23	DBZ	3	3000	200.0	183.0	25.0
TPS3839G25DBZT	SOT-23	DBZ	3	250	200.0	183.0	25.0
TPS3839G33DBZR	SOT-23	DBZ	3	3000	200.0	183.0	25.0
TPS3839G33DBZT	SOT-23	DBZ	3	250	200.0	183.0	25.0
TPS3839G33DQNR	X2SON	DQN	4	3000	184.0	184.0	19.0
TPS3839G33DQNT	X2SON	DQN	4	250	184.0	184.0	19.0
TPS3839K33DBZR	SOT-23	DBZ	3	3000	200.0	183.0	25.0
TPS3839K33DBZT	SOT-23	DBZ	3	250	200.0	183.0	25.0
TPS3839K33DQNR	X2SON	DQN	4	3000	184.0	184.0	19.0
TPS3839K33DQNT	X2SON	DQN	4	250	184.0	184.0	19.0
TPS3839K50DBZR	SOT-23	DBZ	3	3000	200.0	183.0	25.0
TPS3839K50DBZT	SOT-23	DBZ	3	250	203.0	203.0	35.0
TPS3839K50DQNR	X2SON	DQN	4	3000	184.0	184.0	19.0
TPS3839K50DQNT	X2SON	DQN	4	250	184.0	184.0	19.0
TPS3839L30DBZR	SOT-23	DBZ	3	3000	200.0	183.0	25.0
TPS3839L30DBZT	SOT-23	DBZ	3	250	200.0	183.0	25.0
TPS3839L30DQNR	X2SON	DQN	4	3000	184.0	184.0	19.0
TPS3839L30DQNT	X2SON	DQN	4	250	184.0	184.0	19.0