TAPE AND REEL INFORMATION

REEL DIMENSIONS

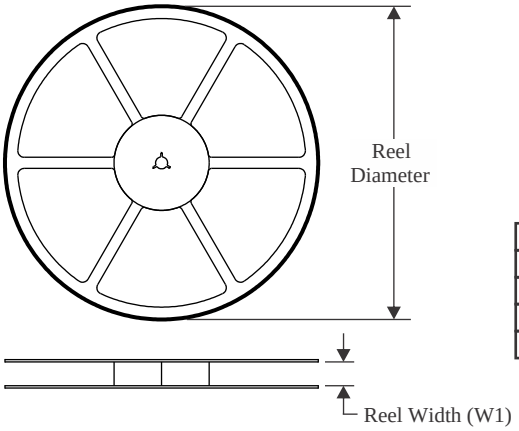

TAPE DIMENSIONS

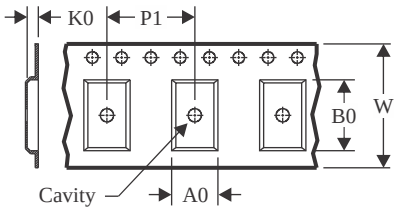

A0	Dimension designed to accommodate the component width
B0	Dimension designed to accommodate the component length
K0	Dimension designed to accommodate the component thickness
W	Overall width of the carrier tape
P1	Pitch between successive cavity centers

QUADRANT ASSIGNMENTS FOR PIN 1 ORIENTATION IN TAPE

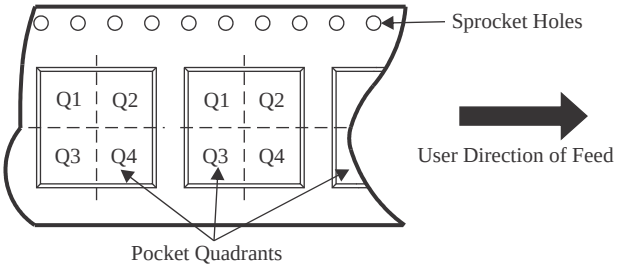

*All dimensions are nominal

Device	Package Type	Package Drawing	Pins	SPQ	Reel Diameter (mm)	Reel Width W1 (mm)	A0 (mm)	B0 (mm)	K0 (mm)	P1 (mm)	W (mm)	Pin1 Quadrant
SN74HCS11DR	SOIC	D	14	2500	330.0	16.4	6.5	9.0	2.1	8.0	16.0	Q1
SN74HCS11DR	SOIC	D	14	2500	330.0	16.4	6.6	9.3	2.1	8.0	16.0	Q1
SN74HCS11PWR	TSSOP	PW	14	2000	330.0	12.4	6.9	5.6	1.6	8.0	12.0	Q1
SN74HCS11PWR	TSSOP	PW	14	2000	330.0	12.4	6.9	5.3	1.6	8.0	12.0	Q1

TAPE AND REEL BOX DIMENSIONS

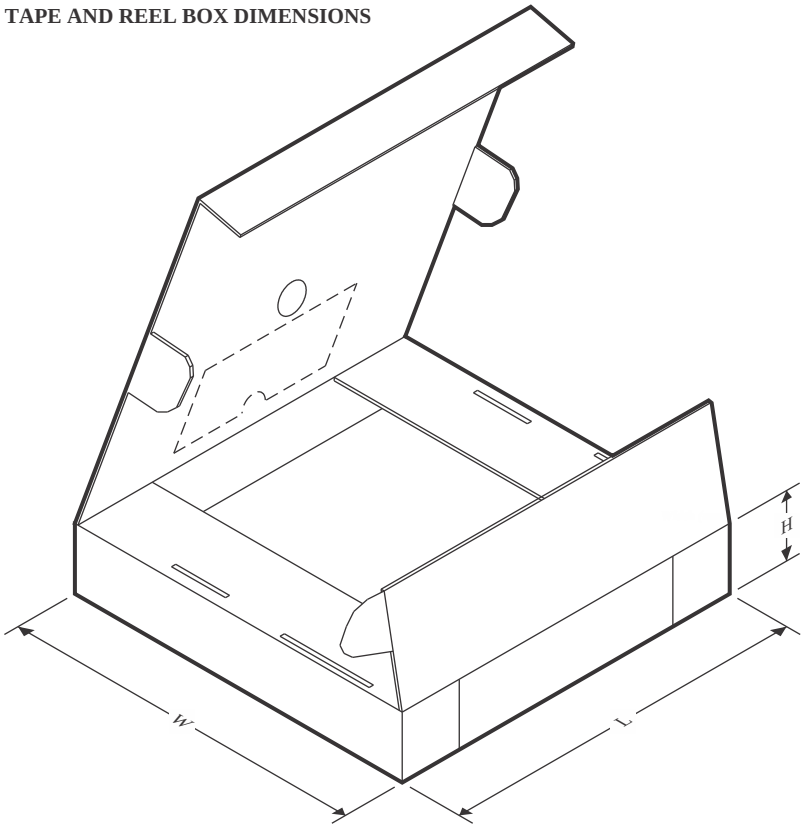

*All dimensions are nominal

Device	Package Type	Package Drawing	Pins	SPQ	Length (mm)	Width (mm)	Height (mm)
SN74HCS11DR	SOIC	D	14	2500	353.0	353.0	32.0
SN74HCS11DR	SOIC	D	14	2500	366.0	364.0	50.0
SN74HCS11PWR	TSSOP	PW	14	2000	356.0	356.0	35.0
SN74HCS11PWR	TSSOP	PW	14	2000	367.0	367.0	35.0