TAPE AND REEL INFORMATION

REEL DIMENSIONS

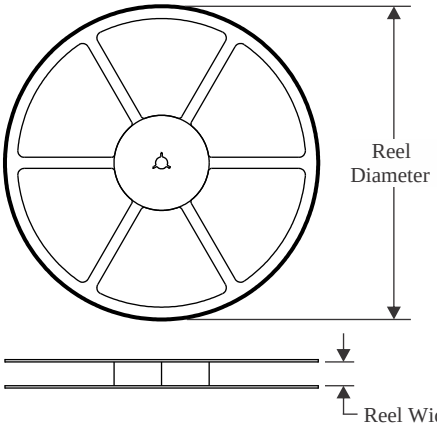

TAPE DIMENSIONS

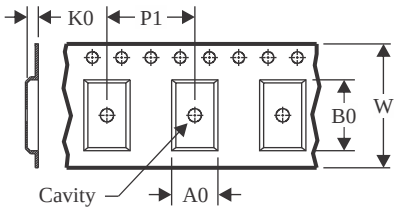

A0	Dimension designed to accommodate the component width
B0	Dimension designed to accommodate the component length
K0	Dimension designed to accommodate the component thickness
W	Overall width of the carrier tape
P1	Pitch between successive cavity centers

QUADRANT ASSIGNMENTS FOR PIN 1 ORIENTATION IN TAPE

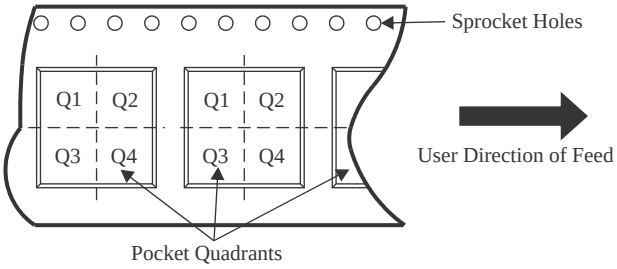

*All dimensions are nominal

Device	Package Type	Package Drawing	Pins	SPQ	Reel Diameter (mm)	Reel Width W1 (mm)	A0 (mm)	B0 (mm)	K0 (mm)	P1 (mm)	W (mm)	Pin1 Quadrant
SN74AHC1G04DBVR	SOT-23	DBV	5	3000	180.0	8.4	3.23	3.17	1.37	4.0	8.0	Q3
SN74AHC1G04DBVR	SOT-23	DBV	5	3000	178.0	9.0	3.3	3.2	1.4	4.0	8.0	Q3
SN74AHC1G04DBVRG4	SOT-23	DBV	5	3000	178.0	9.0	3.23	3.17	1.37	4.0	8.0	Q3
SN74AHC1G04DBVTG4	SOT-23	DBV	5	250	178.0	9.0	3.23	3.17	1.37	4.0	8.0	Q3
SN74AHC1G04DCKR	SC70	DCK	5	3000	178.0	9.0	2.4	2.5	1.2	4.0	8.0	Q3
SN74AHC1G04DCKRG4	SC70	DCK	5	3000	178.0	9.2	2.4	2.4	1.22	4.0	8.0	Q3
SN74AHC1G04DCKTG4	SC70	DCK	5	250	178.0	9.2	2.4	2.4	1.22	4.0	8.0	Q3
SN74AHC1G04DRLR	SOT-5X3	DRL	5	4000	180.0	8.4	1.98	1.78	0.69	4.0	8.0	Q3

TAPE AND REEL BOX DIMENSIONS

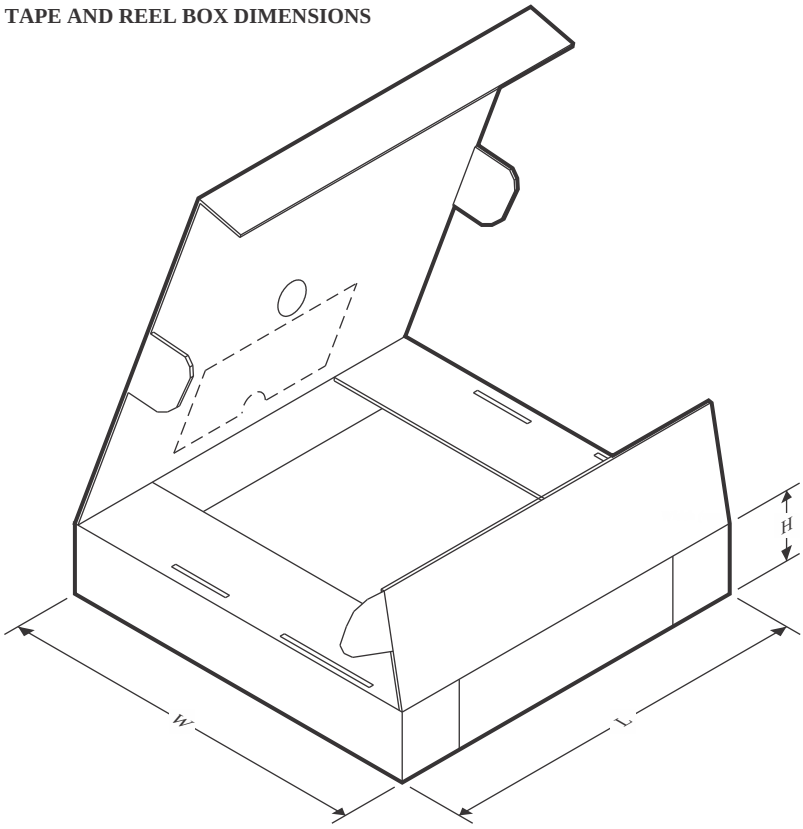

*All dimensions are nominal

Device	Package Type	Package Drawing	Pins	SPQ	Length (mm)	Width (mm)	Height (mm)
SN74AHC1G04DBVR	SOT-23	DBV	5	3000	202.0	201.0	28.0
SN74AHC1G04DBVR	SOT-23	DBV	5	3000	180.0	180.0	18.0
SN74AHC1G04DBVRG4	SOT-23	DBV	5	3000	180.0	180.0	18.0
SN74AHC1G04DBVTG4	SOT-23	DBV	5	250	180.0	180.0	18.0
SN74AHC1G04DCKR	SC70	DCK	5	3000	180.0	180.0	18.0
SN74AHC1G04DCKRG4	SC70	DCK	5	3000	180.0	180.0	18.0
SN74AHC1G04DCKTG4	SC70	DCK	5	250	180.0	180.0	18.0
SN74AHC1G04DRLR	SOT-5X3	DRL	5	4000	202.0	201.0	28.0