TAPE AND REEL INFORMATION

REEL DIMENSIONS

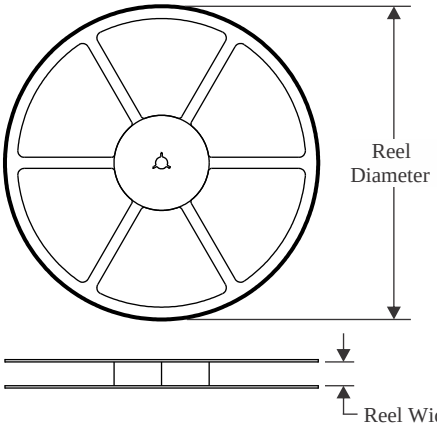

TAPE DIMENSIONS

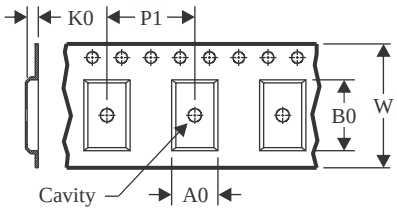

A0	Dimension designed to accommodate the component width
B0	Dimension designed to accommodate the component length
K0	Dimension designed to accommodate the component thickness
W	Overall width of the carrier tape
P1	Pitch between successive cavity centers

QUADRANT ASSIGNMENTS FOR PIN 1 ORIENTATION IN TAPE

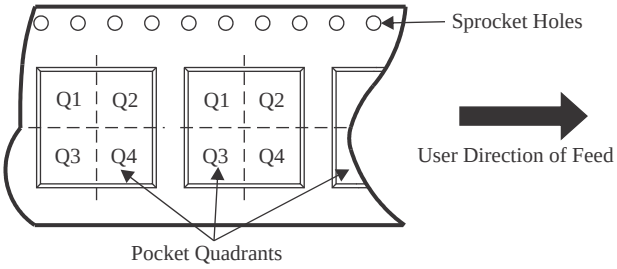

*All dimensions are nominal

Device	Package Type	Package Drawing	Pins	SPQ	Reel Diameter (mm)	Reel Width W1 (mm)	A0 (mm)	B0 (mm)	K0 (mm)	P1 (mm)	W (mm)	Pin1 Quadrant
SN74AHC08BQAR	WQFN	BQA	14	3000	180.0	12.4	2.8	3.3	1.1	4.0	12.0	Q1
SN74AHC08DBR	SSOP	DB	14	2000	330.0	16.4	8.35	6.6	2.4	12.0	16.0	Q1
SN74AHC08DGVR	TVSOP	DGV	14	2000	330.0	12.4	6.8	4.0	1.6	8.0	12.0	Q1
SN74AHC08DR	SOIC	D	14	2500	330.0	16.4	6.5	9.0	2.1	8.0	16.0	Q1
SN74AHC08DR	SOIC	D	14	2500	330.0	16.4	6.5	9.0	2.1	8.0	16.0	Q1
SN74AHC08NSR	SO	NS	14	2000	330.0	16.4	8.1	10.4	2.5	12.0	16.0	Q1
SN74AHC08PWR	TSSOP	PW	14	2000	330.0	12.4	6.9	5.6	1.6	8.0	12.0	Q1
SN74AHC08PWR	TSSOP	PW	14	2000	330.0	12.4	6.9	5.6	1.6	8.0	12.0	Q1
SN74AHC08PWR	TSSOP	PW	14	2000	330.0	12.4	6.85	5.45	1.6	8.0	12.0	Q1
SN74AHC08PWRG4	TSSOP	PW	14	2000	330.0	12.4	6.9	5.6	1.6	8.0	12.0	Q1
SN74AHC08PWRG4	TSSOP	PW	14	2000	330.0	12.4	6.9	5.6	1.6	8.0	12.0	Q1
SN74AHC08RGYR	VQFN	RGY	14	3000	330.0	12.4	3.75	3.75	1.15	8.0	12.0	Q1

TAPE AND REEL BOX DIMENSIONS

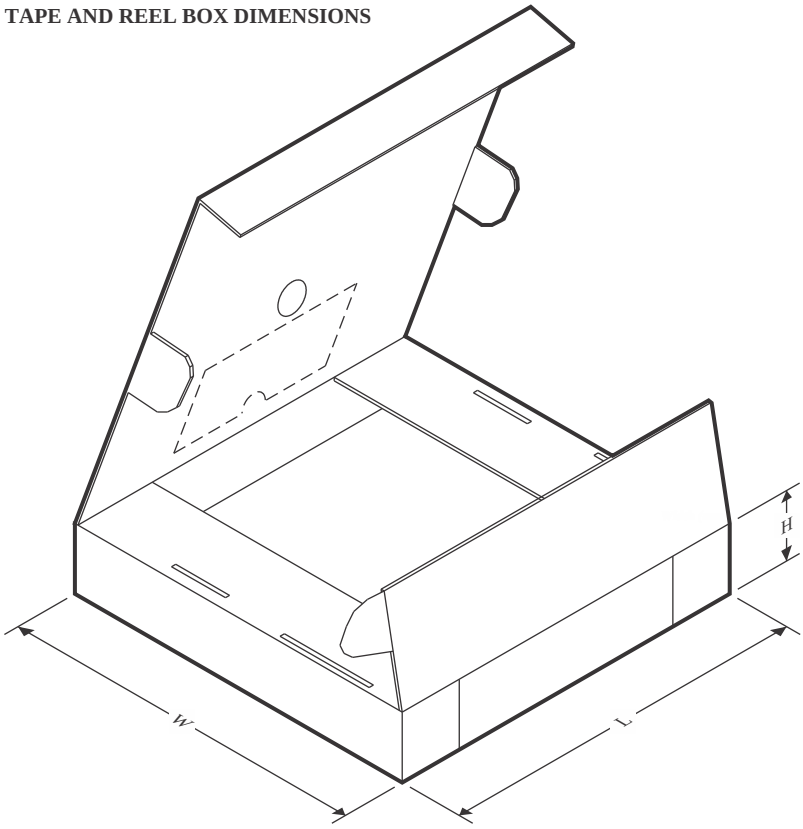

*All dimensions are nominal

Device	Package Type	Package Drawing	Pins	SPQ	Length (mm)	Width (mm)	Height (mm)
SN74AHC08BQAR	WQFN	BQA	14	3000	210.0	185.0	35.0
SN74AHC08DBR	SSOP	DB	14	2000	356.0	356.0	35.0
SN74AHC08DGVR	TVSOP	DGV	14	2000	356.0	356.0	35.0
SN74AHC08DR	SOIC	D	14	2500	353.0	353.0	32.0
SN74AHC08DR	SOIC	D	14	2500	356.0	356.0	35.0
SN74AHC08NSR	SO	NS	14	2000	356.0	356.0	35.0
SN74AHC08PWR	TSSOP	PW	14	2000	356.0	356.0	35.0
SN74AHC08PWR	TSSOP	PW	14	2000	353.0	353.0	32.0
SN74AHC08PWR	TSSOP	PW	14	2000	366.0	364.0	50.0
SN74AHC08PWRG4	TSSOP	PW	14	2000	356.0	356.0	35.0
SN74AHC08PWRG4	TSSOP	PW	14	2000	353.0	353.0	32.0
SN74AHC08RGYR	VQFN	RGY	14	3000	360.0	360.0	36.0

TUBE

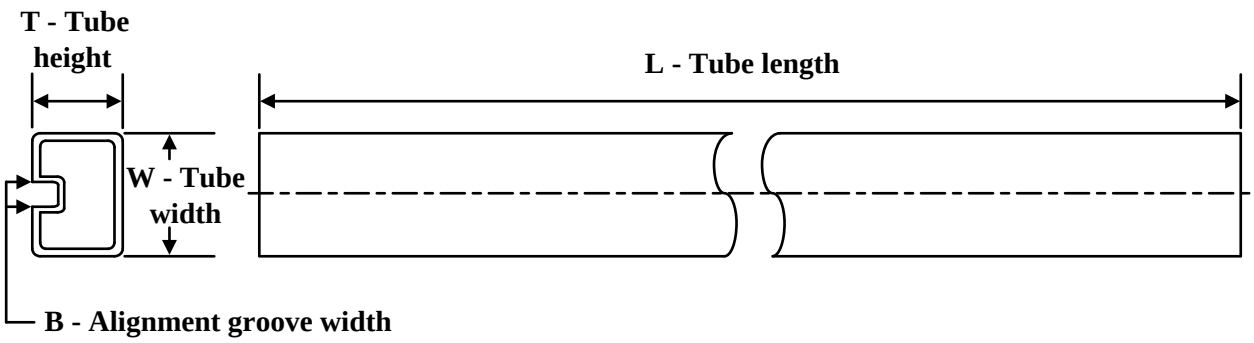

*All dimensions are nominal

Device	Package Name	Package Type	Pins	SPQ	L (mm)	W (mm)	T (µm)	B (mm)
5962-9682001Q2A	FK	LCCC	20	55	506.98	12.06	2030	NA
SN74AHC08N	N	PDIP	14	25	506	13.97	11230	4.32
SN74AHC08N	N	PDIP	14	25	506	13.97	11230	4.32
SNJ54AHC08FK	FK	LCCC	20	55	506.98	12.06	2030	NA