TAPE AND REEL INFORMATION

REEL DIMENSIONS

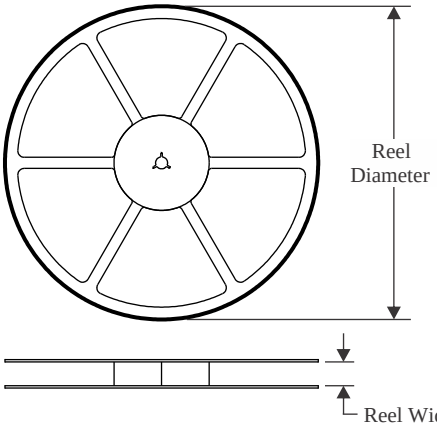

TAPE DIMENSIONS

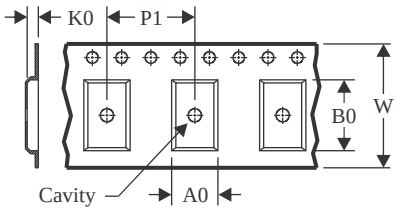

A0	Dimension designed to accommodate the component width
B0	Dimension designed to accommodate the component length
K0	Dimension designed to accommodate the component thickness
W	Overall width of the carrier tape
P1	Pitch between successive cavity centers

QUADRANT ASSIGNMENTS FOR PIN 1 ORIENTATION IN TAPE

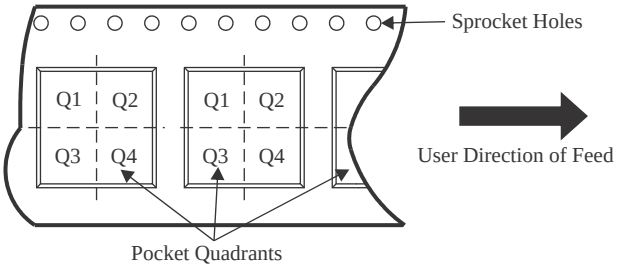

*All dimensions are nominal

Device	Package Type	Package Drawing	Pins	SPQ	Reel Diameter (mm)	Reel Width W1 (mm)	A0 (mm)	B0 (mm)	K0 (mm)	P1 (mm)	W (mm)	Pin1 Quadrant
MSP430G2444IDA38R	TSSOP	DA	38	2000	330.0	24.4	8.6	13.0	1.8	12.0	24.0	Q1
MSP430G2444IRHA40R	VQFN	RHA	40	2500	330.0	16.4	6.3	6.3	1.1	12.0	16.0	Q2
MSP430G2444IRHA40R	VQFN	RHA	40	2500	330.0	16.4	6.3	6.3	1.1	12.0	16.0	Q2
MSP430G2444IRHA40T	VQFN	RHA	40	250	180.0	16.4	6.3	6.3	1.1	12.0	16.0	Q2
MSP430G2444IRHA40T	VQFN	RHA	40	250	180.0	16.4	6.3	6.3	1.1	12.0	16.0	Q2
MSP430G2444IYFFT	DSBGA	YFF	49	250	180.0	12.4	3.5	3.7	0.81	8.0	12.0	Q2
MSP430G2544IDA38R	TSSOP	DA	38	2000	330.0	24.4	8.6	13.0	1.8	12.0	24.0	Q1
MSP430G2544IRHA40R	VQFN	RHA	40	2500	330.0	16.4	6.3	6.3	1.1	12.0	16.0	Q2
MSP430G2544IRHA40R	VQFN	RHA	40	2500	330.0	16.4	6.3	6.3	1.1	12.0	16.0	Q2
MSP430G2544IRHA40T	VQFN	RHA	40	250	180.0	16.4	6.3	6.3	1.1	12.0	16.0	Q2
MSP430G2544IRHA40T	VQFN	RHA	40	250	180.0	16.4	6.3	6.3	1.1	12.0	16.0	Q2
MSP430G2744IDA38R	TSSOP	DA	38	2000	330.0	24.4	8.6	13.0	1.8	12.0	24.0	Q1
MSP430G2744IRHA40R	VQFN	RHA	40	2500	330.0	16.4	6.3	6.3	1.1	12.0	16.0	Q2
MSP430G2744IRHA40T	VQFN	RHA	40	250	180.0	16.4	6.3	6.3	1.1	12.0	16.0	Q2
MSP430G2744IRHA40T	VQFN	RHA	40	250	180.0	16.4	6.3	6.3	1.1	12.0	16.0	Q2
MSP430G2744IYFFR	DSBGA	YFF	49	2500	330.0	12.4	3.5	3.7	0.81	8.0	12.0	Q2

TAPE AND REEL BOX DIMENSIONS

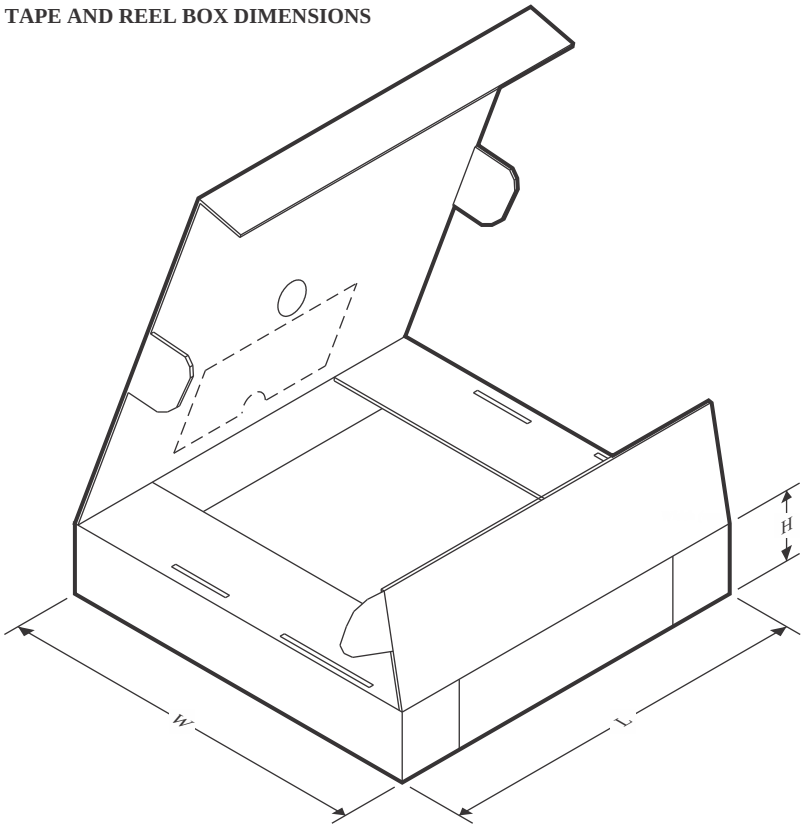

*All dimensions are nominal

Device	Package Type	Package Drawing	Pins	SPQ	Length (mm)	Width (mm)	Height (mm)
MSP430G2444IDA38R	TSSOP	DA	38	2000	350.0	350.0	43.0
MSP430G2444IRHA40R	VQFN	RHA	40	2500	367.0	367.0	38.0
MSP430G2444IRHA40R	VQFN	RHA	40	2500	367.0	367.0	35.0
MSP430G2444IRHA40T	VQFN	RHA	40	250	210.0	185.0	35.0
MSP430G2444IRHA40T	VQFN	RHA	40	250	210.0	185.0	35.0
MSP430G2444IYFFT	DSBGA	YFF	49	250	182.0	182.0	20.0
MSP430G2544IDA38R	TSSOP	DA	38	2000	350.0	350.0	43.0
MSP430G2544IRHA40R	VQFN	RHA	40	2500	367.0	367.0	38.0
MSP430G2544IRHA40R	VQFN	RHA	40	2500	367.0	367.0	35.0
MSP430G2544IRHA40T	VQFN	RHA	40	250	210.0	185.0	35.0
MSP430G2544IRHA40T	VQFN	RHA	40	250	210.0	185.0	35.0
MSP430G2744IDA38R	TSSOP	DA	38	2000	350.0	350.0	43.0
MSP430G2744IRHA40R	VQFN	RHA	40	2500	367.0	367.0	38.0
MSP430G2744IRHA40T	VQFN	RHA	40	250	210.0	185.0	35.0
MSP430G2744IRHA40T	VQFN	RHA	40	250	210.0	185.0	35.0
MSP430G2744IYFFR	DSBGA	YFF	49	2500	335.0	335.0	25.0

TUBE

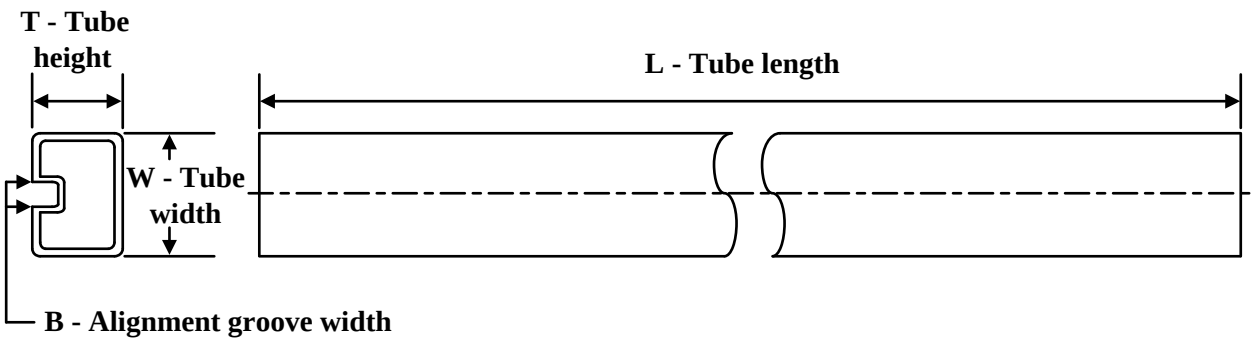

*All dimensions are nominal

Device	Package Name	Package Type	Pins	SPQ	L (mm)	W (mm)	T (µm)	B (mm)
MSP430G2444IDA38	DA	TSSOP	38	40	530	11.89	3600	4.9
MSP430G2544IDA38	DA	TSSOP	38	40	530	11.89	3600	4.9
MSP430G2744IDA38	DA	TSSOP	38	40	530	11.89	3600	4.9