TAPE AND REEL INFORMATION

REEL DIMENSIONS

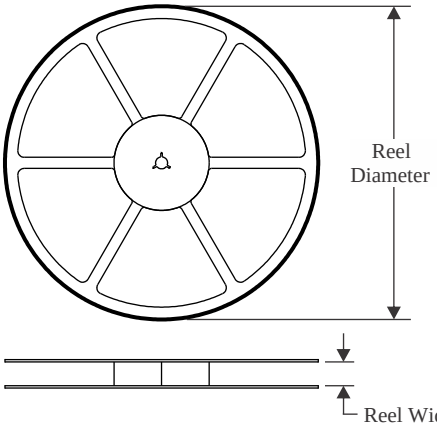

TAPE DIMENSIONS

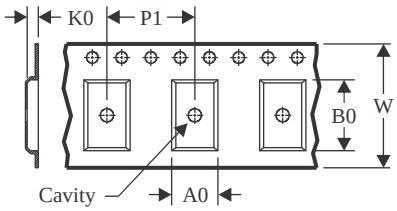

A0	Dimension designed to accommodate the component width
B0	Dimension designed to accommodate the component length
K0	Dimension designed to accommodate the component thickness
W	Overall width of the carrier tape
P1	Pitch between successive cavity centers

QUADRANT ASSIGNMENTS FOR PIN 1 ORIENTATION IN TAPE

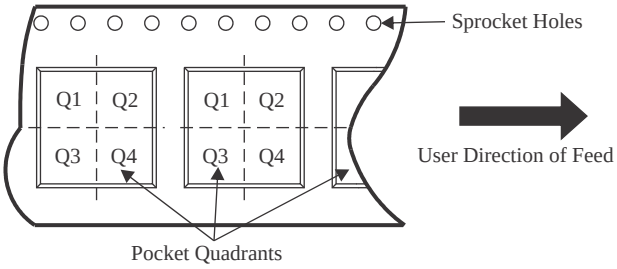

*All dimensions are nominal

Device	Package Type	Package Drawing	Pins	SPQ	Reel Diameter (mm)	Reel Width W1 (mm)	A0 (mm)	B0 (mm)	K0 (mm)	P1 (mm)	W (mm)	Pin1 Quadrant
LM211DR	SOIC	D	8	2500	330.0	12.4	6.4	5.2	2.1	8.0	12.0	Q1
LM211DRG4	SOIC	D	8	2500	330.0	12.4	6.4	5.2	2.1	8.0	12.0	Q1
LM211DRG4	SOIC	D	8	2500	330.0	12.4	6.4	5.2	2.1	8.0	12.0	Q1
LM211PWR	TSSOP	PW	8	2000	330.0	12.4	7.0	3.6	1.6	8.0	12.0	Q1
LM211QDR	SOIC	D	8	2500	330.0	12.5	6.4	5.2	2.1	8.0	12.0	Q1
LM311DR	SOIC	D	8	2500	330.0	12.4	6.4	5.2	2.1	8.0	12.0	Q1
LM311PSR	SO	PS	8	2000	330.0	16.4	8.35	6.6	2.4	12.0	16.0	Q1
LM311PWR	TSSOP	PW	8	2000	330.0	12.4	7.0	3.6	1.6	8.0	12.0	Q1

TAPE AND REEL BOX DIMENSIONS

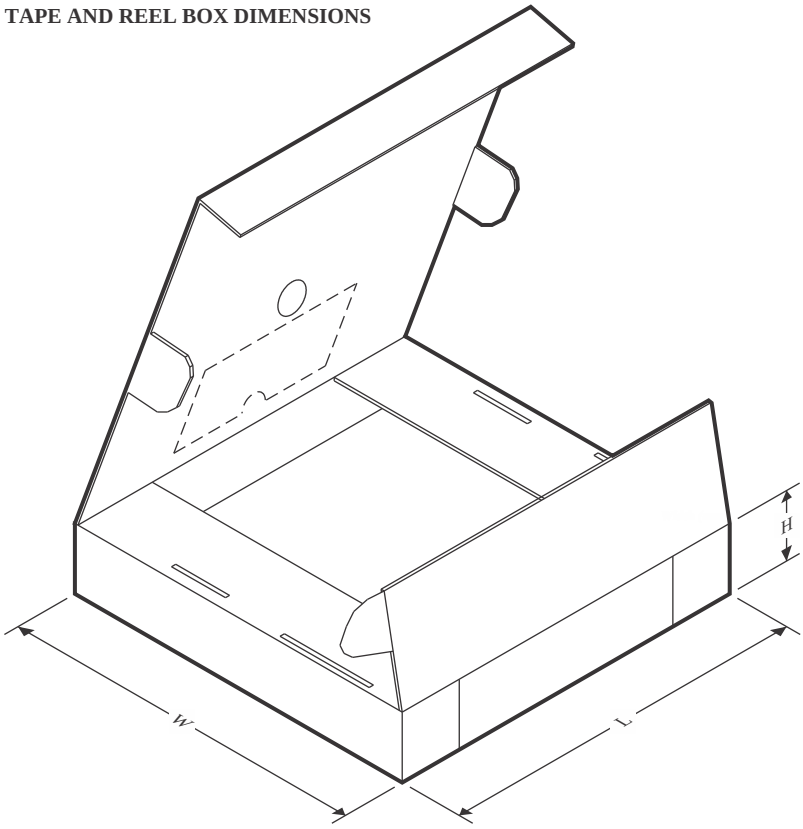

*All dimensions are nominal

Device	Package Type	Package Drawing	Pins	SPQ	Length (mm)	Width (mm)	Height (mm)
LM211DR	SOIC	D	8	2500	353.0	353.0	32.0
LM211DRG4	SOIC	D	8	2500	340.5	338.1	20.6
LM211DRG4	SOIC	D	8	2500	356.0	356.0	35.0
LM211PWR	TSSOP	PW	8	2000	356.0	356.0	35.0
LM211QDR	SOIC	D	8	2500	353.0	353.0	32.0
LM311DR	SOIC	D	8	2500	353.0	353.0	32.0
LM311PSR	SO	PS	8	2000	356.0	356.0	35.0
LM311PWR	TSSOP	PW	8	2000	356.0	356.0	35.0

TUBE

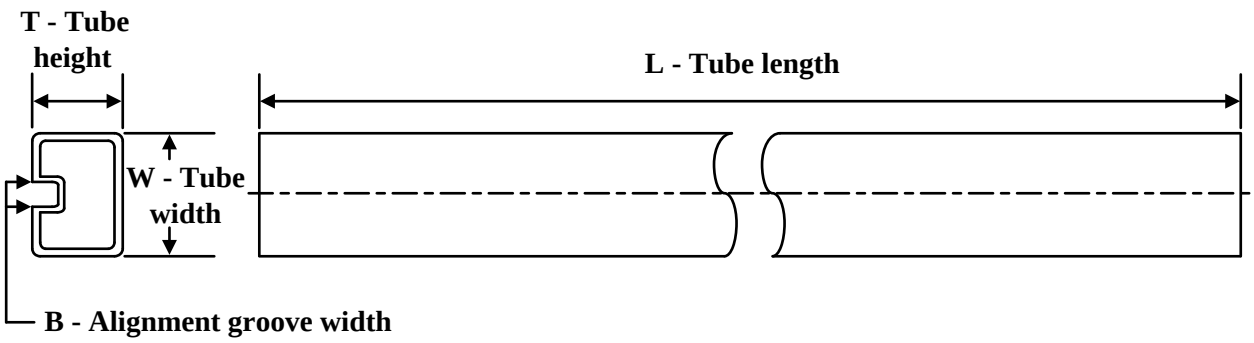

*All dimensions are nominal

Device	Package Name	Package Type	Pins	SPQ	L (mm)	W (mm)	T (µm)	B (mm)
LM111FKB	FK	LCCC	20	55	506.98	12.06	2030	NA
LM211D	D	SOIC	8	75	506.6	8	3940	4.32
LM211D	D	SOIC	8	75	507	8	3940	4.32
LM211P	P	PDIP	8	50	506	13.97	11230	4.32
LM211PW	PW	TSSOP	8	150	530	10.2	3600	3.5
LM211QD	D	SOIC	8	75	507	8	3940	4.32
LM311D	D	SOIC	8	75	506.6	8	3940	4.32
LM311D	D	SOIC	8	75	507	8	3940	4.32
LM311P	P	PDIP	8	50	506	13.97	11230	4.32
LM311PW	PW	TSSOP	8	150	530	10.2	3600	3.5