TAPE AND REEL INFORMATION

REEL DIMENSIONS

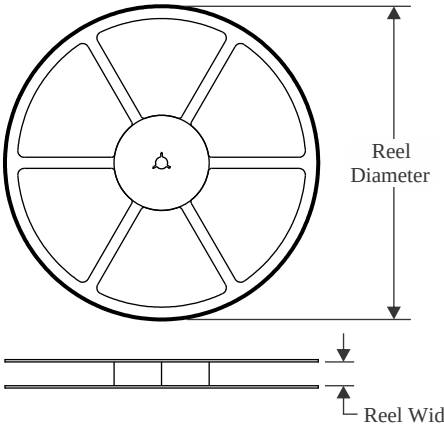

TAPE DIMENSIONS

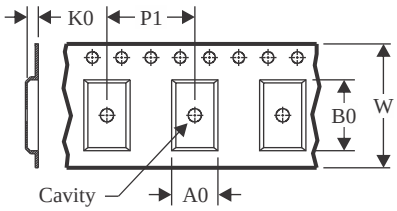

A0	Dimension designed to accommodate the component width
B0	Dimension designed to accommodate the component length
K0	Dimension designed to accommodate the component thickness
W	Overall width of the carrier tape
P1	Pitch between successive cavity centers

QUADRANT ASSIGNMENTS FOR PIN 1 ORIENTATION IN TAPE

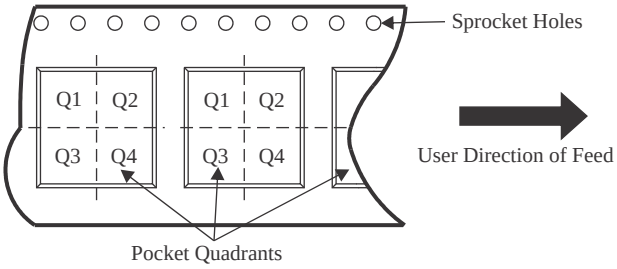

*All dimensions are nominal

Device	Package Type	Package Drawing	Pins	SPQ	Reel Diameter (mm)	Reel Width W1 (mm)	A0 (mm)	B0 (mm)	K0 (mm)	P1 (mm)	W (mm)	Pin1 Quadrant
LM2588SX-12/NOPB	DDPAK/ TO-263	KTW	7	500	330.0	24.4	10.75	14.85	5.0	16.0	24.0	Q2
LM2588SX-3.3/NOPB	DDPAK/ TO-263	KTW	7	500	330.0	24.4	10.75	14.85	5.0	16.0	24.0	Q2
LM2588SX-5.0/NOPB	DDPAK/ TO-263	KTW	7	500	330.0	24.4	10.75	14.85	5.0	16.0	24.0	Q2
LM2588SX-ADJ/NOPB	DDPAK/ TO-263	KTW	7	500	330.0	24.4	10.75	14.85	5.0	16.0	24.0	Q2

TAPE AND REEL BOX DIMENSIONS

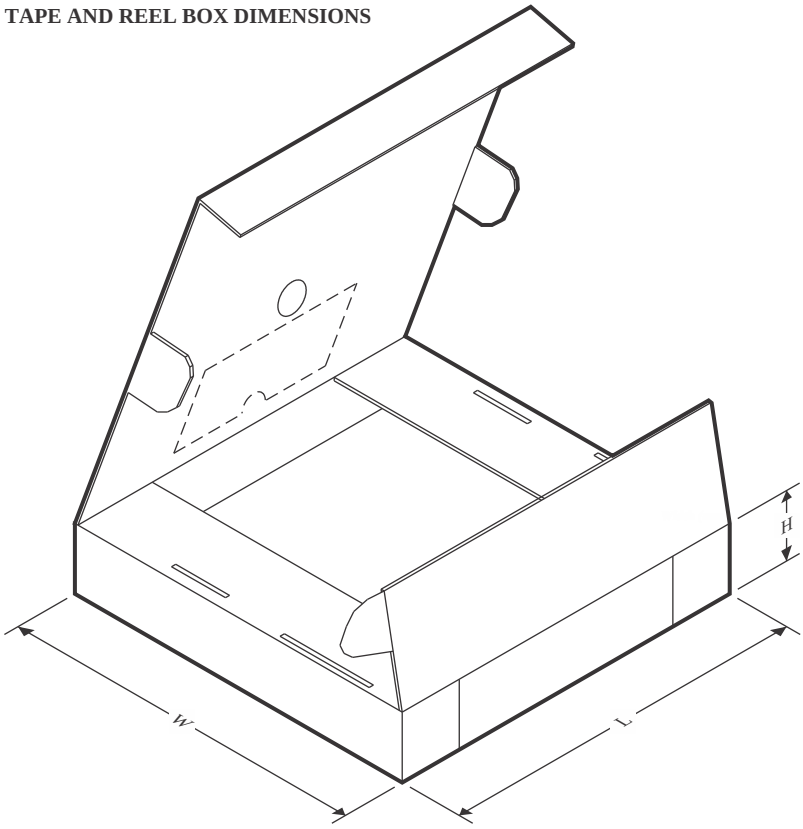

*All dimensions are nominal

Device	Package Type	Package Drawing	Pins	SPQ	Length (mm)	Width (mm)	Height (mm)
LM2588SX-12/NOPB	DDPAK/TO-263	KTW	7	500	356.0	356.0	45.0
LM2588SX-3.3/NOPB	DDPAK/TO-263	KTW	7	500	356.0	356.0	45.0
LM2588SX-5.0/NOPB	DDPAK/TO-263	KTW	7	500	356.0	356.0	45.0
LM2588SX-ADJ/NOPB	DDPAK/TO-263	KTW	7	500	356.0	356.0	45.0

TUBE

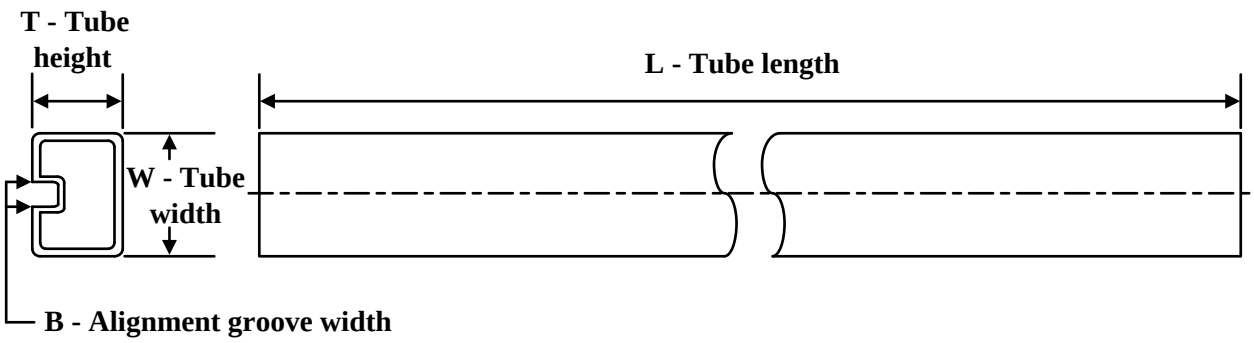

*All dimensions are nominal

Device	Package Name	Package Type	Pins	SPQ	L (mm)	W (mm)	T (µm)	B (mm)
LM2588S-12/NOPB	KTW	TO-263	7	45	502	25	8204.2	9.19
LM2588S-3.3/NOPB	KTW	TO-263	7	45	502	25	8204.2	9.19
LM2588S-5.0/NOPB	KTW	TO-263	7	45	502	25	8204.2	9.19
LM2588S-ADJ/NOPB	KTW	TO-263	7	45	502	25	8204.2	9.19
LM2588T-3.3/NOPB	NDZ	TO-220	7	45	502	30	30048.2	10.74
LM2588T-5.0/NOPB	NDZ	TO-220	7	45	502	30	30048.2	10.74
LM2588T-ADJ/NOPB	NDZ	TO-220	7	45	502	30	30048.2	10.74