TAPE AND REEL INFORMATION

REEL DIMENSIONS

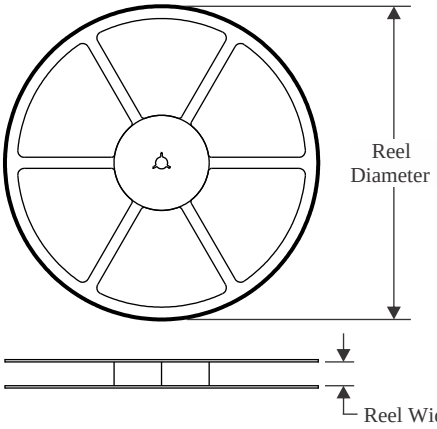

TAPE DIMENSIONS

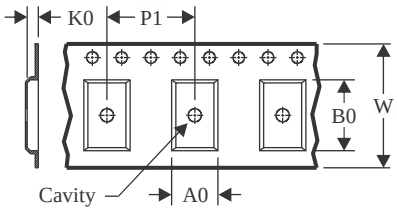

A0	Dimension designed to accommodate the component width
B0	Dimension designed to accommodate the component length
K0	Dimension designed to accommodate the component thickness
W	Overall width of the carrier tape
P1	Pitch between successive cavity centers

QUADRANT ASSIGNMENTS FOR PIN 1 ORIENTATION IN TAPE

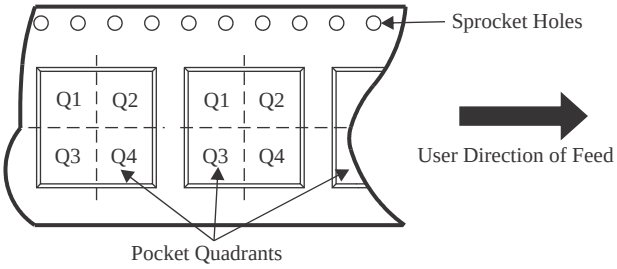

*All dimensions are nominal

Device	Package Type	Package Drawing	Pins	SPQ	Reel Diameter (mm)	Reel Width W1 (mm)	A0 (mm)	B0 (mm)	K0 (mm)	P1 (mm)	W (mm)	Pin1 Quadrant
INA296A1QDDFRQ1	SOT-23-THIN	DDF	8	3000	180.0	8.4	3.15	3.1	1.55	4.0	8.0	Q3
INA296A1QDGKRQ1	VSSOP	DGK	8	2500	330.0	12.4	5.3	3.4	1.4	8.0	12.0	Q1
INA296A1QDRQ1	SOIC	D	8	2500	330.0	12.4	6.4	5.2	2.1	8.0	12.0	Q1
INA296A2QDDFRQ1	SOT-23-THIN	DDF	8	3000	180.0	8.4	3.15	3.1	1.55	4.0	8.0	Q3
INA296A2QDGKRQ1	VSSOP	DGK	8	2500	330.0	12.4	5.3	3.4	1.4	8.0	12.0	Q1
INA296A2QDRQ1	SOIC	D	8	2500	330.0	12.4	6.4	5.2	2.1	8.0	12.0	Q1
INA296A3QDDFRQ1	SOT-23-THIN	DDF	8	3000	180.0	8.4	3.15	3.1	1.55	4.0	8.0	Q3
INA296A3QDGKRQ1	VSSOP	DGK	8	2500	330.0	12.4	5.3	3.4	1.4	8.0	12.0	Q1
INA296A3QDRQ1	SOIC	D	8	2500	330.0	12.4	6.4	5.2	2.1	8.0	12.0	Q1
INA296A4QDDFRQ1	SOT-23-THIN	DDF	8	3000	180.0	8.4	3.15	3.1	1.55	4.0	8.0	Q3
INA296A4QDGKRQ1	VSSOP	DGK	8	2500	330.0	12.4	5.3	3.4	1.4	8.0	12.0	Q1
INA296A4QDRQ1	SOIC	D	8	2500	330.0	12.4	6.4	5.2	2.1	8.0	12.0	Q1

Device	Package Type	Package Drawing	Pins	SPQ	Reel Diameter (mm)	Reel Width W1 (mm)	A0 (mm)	B0 (mm)	K0 (mm)	P1 (mm)	W (mm)	Pin1 Quadrant
INA296A5QDDFRQ1	SOT-23-THIN	DDF	8	3000	180.0	8.4	3.15	3.1	1.55	4.0	8.0	Q3
INA296A5QDGKRQ1	VSSOP	DGK	8	2500	330.0	12.4	5.3	3.4	1.4	8.0	12.0	Q1
INA296A5QDRQ1	SOIC	D	8	2500	330.0	12.4	6.4	5.2	2.1	8.0	12.0	Q1
INA296B1QDDFRQ1	SOT-23-THIN	DDF	8	3000	180.0	8.4	3.15	3.1	1.55	4.0	8.0	Q3
INA296B1QDGKRQ1	VSSOP	DGK	8	2500	330.0	12.4	5.3	3.4	1.4	8.0	12.0	Q1
INA296B1QDRQ1	SOIC	D	8	2500	330.0	12.4	6.4	5.2	2.1	8.0	12.0	Q1
INA296B2QDDFRQ1	SOT-23-THIN	DDF	8	3000	180.0	8.4	3.15	3.1	1.55	4.0	8.0	Q3
INA296B2QDGKRQ1	VSSOP	DGK	8	2500	330.0	12.4	5.3	3.4	1.4	8.0	12.0	Q1
INA296B2QDRQ1	SOIC	D	8	2500	330.0	12.4	6.4	5.2	2.1	8.0	12.0	Q1
INA296B3QDDFRQ1	SOT-23-THIN	DDF	8	3000	180.0	8.4	3.15	3.1	1.55	4.0	8.0	Q3
INA296B3QDGKRQ1	VSSOP	DGK	8	2500	330.0	12.4	5.3	3.4	1.4	8.0	12.0	Q1
INA296B3QDRQ1	SOIC	D	8	2500	330.0	12.4	6.4	5.2	2.1	8.0	12.0	Q1
INA296B4QDDFRQ1	SOT-23-THIN	DDF	8	3000	180.0	8.4	3.15	3.1	1.55	4.0	8.0	Q3
INA296B4QDGKRQ1	VSSOP	DGK	8	2500	330.0	12.4	5.3	3.4	1.4	8.0	12.0	Q1
INA296B4QDRQ1	SOIC	D	8	2500	330.0	12.4	6.4	5.2	2.1	8.0	12.0	Q1
INA296B5QDDFRQ1	SOT-23-THIN	DDF	8	3000	180.0	8.4	3.15	3.1	1.55	4.0	8.0	Q3
INA296B5QDGKRQ1	VSSOP	DGK	8	2500	330.0	12.4	5.3	3.4	1.4	8.0	12.0	Q1
INA296B5QDRQ1	SOIC	D	8	2500	330.0	12.4	6.4	5.2	2.1	8.0	12.0	Q1

TAPE AND REEL BOX DIMENSIONS

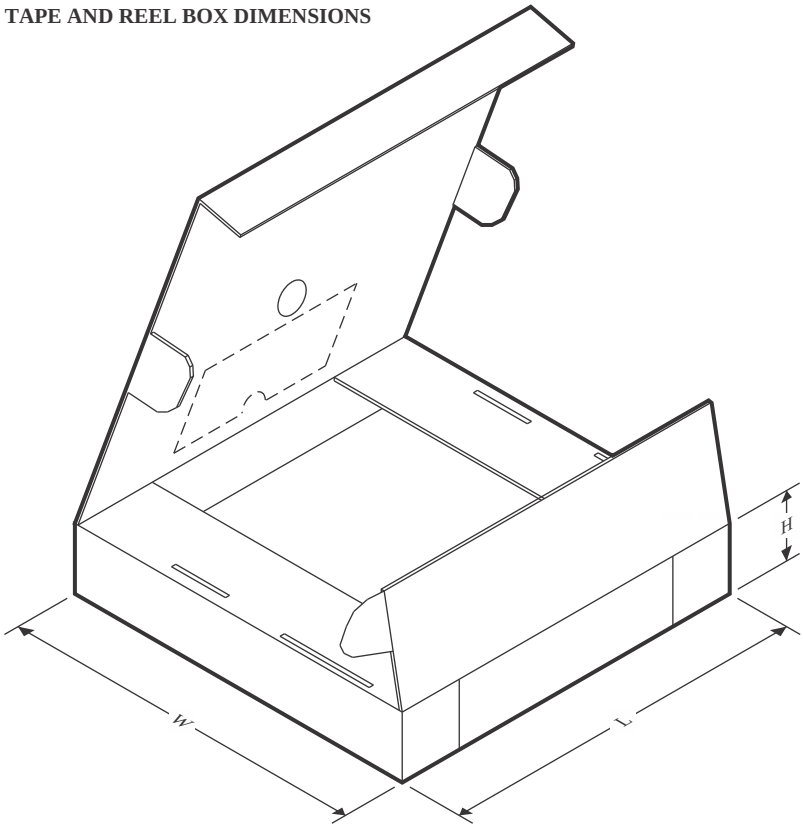

*All dimensions are nominal

Device	Package Type	Package Drawing	Pins	SPQ	Length (mm)	Width (mm)	Height (mm)
INA296A1QDDFRQ1	SOT-23-THIN	DDF	8	3000	210.0	185.0	35.0
INA296A1QDGKRQ1	VSSOP	DGK	8	2500	356.0	356.0	35.0
INA296A1QDRQ1	SOIC	D	8	2500	353.0	353.0	32.0
INA296A2QDDFRQ1	SOT-23-THIN	DDF	8	3000	210.0	185.0	35.0
INA296A2QDGKRQ1	VSSOP	DGK	8	2500	356.0	356.0	35.0
INA296A2QDRQ1	SOIC	D	8	2500	353.0	353.0	32.0
INA296A3QDDFRQ1	SOT-23-THIN	DDF	8	3000	210.0	185.0	35.0
INA296A3QDGKRQ1	VSSOP	DGK	8	2500	356.0	356.0	35.0
INA296A3QDRQ1	SOIC	D	8	2500	353.0	353.0	32.0
INA296A4QDDFRQ1	SOT-23-THIN	DDF	8	3000	210.0	185.0	35.0
INA296A4QDGKRQ1	VSSOP	DGK	8	2500	356.0	356.0	35.0
INA296A4QDRQ1	SOIC	D	8	2500	340.5	336.1	25.0
INA296A5QDDFRQ1	SOT-23-THIN	DDF	8	3000	210.0	185.0	35.0
INA296A5QDGKRQ1	VSSOP	DGK	8	2500	356.0	356.0	35.0
INA296A5QDRQ1	SOIC	D	8	2500	353.0	353.0	32.0
INA296B1QDDFRQ1	SOT-23-THIN	DDF	8	3000	210.0	185.0	35.0
INA296B1QDGKRQ1	VSSOP	DGK	8	2500	356.0	356.0	35.0
INA296B1QDRQ1	SOIC	D	8	2500	353.0	353.0	32.0

Device	Package Type	Package Drawing	Pins	SPQ	Length (mm)	Width (mm)	Height (mm)
INA296B2QDDFRQ1	SOT-23-THIN	DDF	8	3000	210.0	185.0	35.0
INA296B2QDGKRQ1	VSSOP	DGK	8	2500	356.0	356.0	35.0
INA296B2QDRQ1	SOIC	D	8	2500	353.0	353.0	32.0
INA296B3QDDFRQ1	SOT-23-THIN	DDF	8	3000	210.0	185.0	35.0
INA296B3QDGKRQ1	VSSOP	DGK	8	2500	356.0	356.0	35.0
INA296B3QDRQ1	SOIC	D	8	2500	353.0	353.0	32.0
INA296B4QDDFRQ1	SOT-23-THIN	DDF	8	3000	210.0	185.0	35.0
INA296B4QDGKRQ1	VSSOP	DGK	8	2500	356.0	356.0	35.0
INA296B4QDRQ1	SOIC	D	8	2500	340.5	336.1	25.0
INA296B5QDDFRQ1	SOT-23-THIN	DDF	8	3000	210.0	185.0	35.0
INA296B5QDGKRQ1	VSSOP	DGK	8	2500	356.0	356.0	35.0
INA296B5QDRQ1	SOIC	D	8	2500	340.5	336.1	25.0