TAPE AND REEL INFORMATION

REEL DIMENSIONS

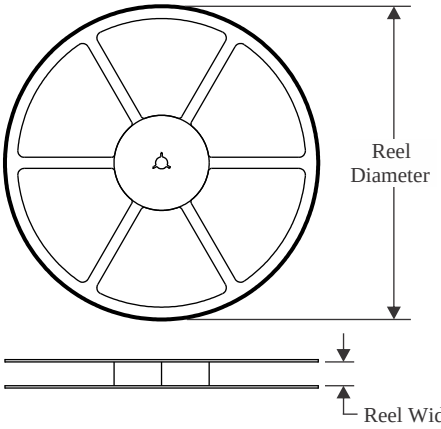

TAPE DIMENSIONS

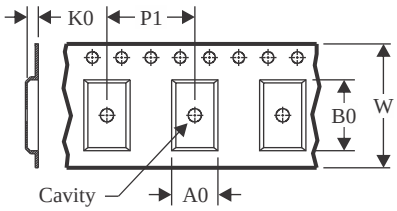

A0	Dimension designed to accommodate the component width
B0	Dimension designed to accommodate the component length
K0	Dimension designed to accommodate the component thickness
W	Overall width of the carrier tape
P1	Pitch between successive cavity centers

QUADRANT ASSIGNMENTS FOR PIN 1 ORIENTATION IN TAPE

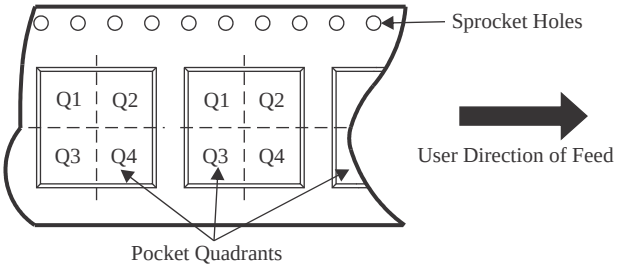

*All dimensions are nominal

Device	Package Type	Package Drawing	Pins	SPQ	Reel Diameter (mm)	Reel Width W1 (mm)	A0 (mm)	B0 (mm)	K0 (mm)	P1 (mm)	W (mm)	Pin1 Quadrant
INA210AIDCKJ	SC70	DCK	6	10000	330.0	8.4	2.4	2.5	1.2	4.0	8.0	Q3
INA210AIDCKR	SC70	DCK	6	3000	180.0	8.4	2.41	2.41	1.2	4.0	8.0	Q3
INA210AIDCKR	SC70	DCK	6	3000	178.0	9.0	2.4	2.5	1.2	4.0	8.0	Q3
INA210AIDCKR	SC70	DCK	6	3000	178.0	9.0	2.4	2.5	1.2	4.0	8.0	Q3
INA210AIDCKT	SC70	DCK	6	250	178.0	9.0	2.4	2.5	1.2	4.0	8.0	Q3
INA210AIDCKT	SC70	DCK	6	250	179.0	8.4	2.2	2.5	1.2	4.0	8.0	Q3
INA210AIDCKT	SC70	DCK	6	250	178.0	9.0	2.4	2.5	1.2	4.0	8.0	Q3
INA210AIRSWR	UQFN	RSW	10	3000	179.0	8.4	1.7	2.1	0.7	4.0	8.0	Q1
INA210BIDCKR	SC70	DCK	6	3000	178.0	9.0	2.4	2.5	1.2	4.0	8.0	Q3
INA210BIDCKT	SC70	DCK	6	250	178.0	9.0	2.4	2.5	1.2	4.0	8.0	Q3
INA210BIDCKT	SC70	DCK	6	250	178.0	9.0	2.4	2.5	1.2	4.0	8.0	Q3
INA210BIRSWR	UQFN	RSW	10	3000	180.0	8.4	1.7	2.1	0.7	4.0	8.0	Q1
INA210CIDCKR	SC70	DCK	6	3000	178.0	9.0	2.4	2.5	1.2	4.0	8.0	Q3
INA210CIDCKT	SC70	DCK	6	250	178.0	9.0	2.4	2.5	1.2	4.0	8.0	Q3
INA210CIRSWR	UQFN	RSW	10	3000	180.0	9.5	1.6	2.0	0.8	4.0	8.0	Q1
INA211AIDCKR	SC70	DCK	6	3000	180.0	8.4	2.47	2.3	1.25	4.0	8.0	Q3

Device	Package Type	Package Drawing	Pins	SPQ	Reel Diameter (mm)	Reel Width W1 (mm)	A0 (mm)	B0 (mm)	K0 (mm)	P1 (mm)	W (mm)	Pin1 Quadrant
INA211AIDCKR	SC70	DCK	6	3000	178.0	9.0	2.4	2.5	1.2	4.0	8.0	Q3
INA211AIDCKT	SC70	DCK	6	250	178.0	9.0	2.4	2.5	1.2	4.0	8.0	Q3
INA211AIDCKT	SC70	DCK	6	250	178.0	9.0	2.4	2.5	1.2	4.0	8.0	Q3
INA211AIDCKT	SC70	DCK	6	250	179.0	8.4	2.2	2.5	1.2	4.0	8.0	Q3
INA211AIDCKT	SC70	DCK	6	250	180.0	8.4	2.47	2.3	1.25	4.0	8.0	Q3
INA211BIDCKR	SC70	DCK	6	3000	178.0	9.0	2.4	2.5	1.2	4.0	8.0	Q3
INA211BIDCKR	SC70	DCK	6	3000	178.0	9.0	2.4	2.5	1.2	4.0	8.0	Q3
INA211BIDCKT	SC70	DCK	6	250	178.0	9.0	2.4	2.5	1.2	4.0	8.0	Q3
INA211BIDCKT	SC70	DCK	6	250	178.0	9.0	2.4	2.5	1.2	4.0	8.0	Q3
INA211BIRSWR	UQFN	RSW	10	3000	179.0	8.4	1.7	2.1	0.7	4.0	8.0	Q1
INA211CIDCKR	SC70	DCK	6	3000	178.0	9.0	2.4	2.5	1.2	4.0	8.0	Q3
INA211CIRSWR	UQFN	RSW	10	3000	180.0	9.5	1.6	2.0	0.8	4.0	8.0	Q1
INA212AIDCKR	SC70	DCK	6	3000	180.0	8.4	2.47	2.3	1.25	4.0	8.0	Q3
INA212AIDCKR	SC70	DCK	6	3000	178.0	9.0	2.4	2.5	1.2	4.0	8.0	Q3
INA212AIDCKR	SC70	DCK	6	3000	178.0	9.0	2.4	2.5	1.2	4.0	8.0	Q3
INA212AIDCKR	SC70	DCK	6	3000	179.0	8.4	2.2	2.5	1.2	4.0	8.0	Q3
INA212AIDCKT	SC70	DCK	6	250	178.0	9.0	2.4	2.5	1.2	4.0	8.0	Q3
INA212AIDCKT	SC70	DCK	6	250	180.0	8.4	2.41	2.41	1.2	4.0	8.0	Q3
INA212AIDCKT	SC70	DCK	6	250	178.0	9.0	2.4	2.5	1.2	4.0	8.0	Q3
INA212AIDCKT	SC70	DCK	6	250	179.0	8.4	2.2	2.5	1.2	4.0	8.0	Q3
INA212BIDCKR	SC70	DCK	6	3000	178.0	9.0	2.4	2.5	1.2	4.0	8.0	Q3
INA212BIDCKR	SC70	DCK	6	3000	178.0	9.0	2.4	2.5	1.2	4.0	8.0	Q3
INA212BIRSWR	UQFN	RSW	10	3000	180.0	8.4	1.7	2.1	0.7	4.0	8.0	Q1
INA212CIDCKR	SC70	DCK	6	3000	178.0	9.0	2.4	2.5	1.2	4.0	8.0	Q3
INA212CIRSWR	UQFN	RSW	10	3000	180.0	8.4	1.7	2.1	0.7	4.0	8.0	Q1
INA213AIDCKR	SC70	DCK	6	3000	178.0	9.0	2.4	2.5	1.2	4.0	8.0	Q3
INA213AIDCKR	SC70	DCK	6	3000	180.0	8.4	2.41	2.41	1.2	4.0	8.0	Q3
INA213AIDCKT	SC70	DCK	6	250	179.0	8.4	2.2	2.5	1.2	4.0	8.0	Q3
INA213AIDCKT	SC70	DCK	6	250	178.0	9.0	2.4	2.5	1.2	4.0	8.0	Q3
INA213AIDCKT	SC70	DCK	6	250	180.0	8.4	2.47	2.3	1.25	4.0	8.0	Q3
INA213AIDCKT	SC70	DCK	6	250	178.0	9.0	2.4	2.5	1.2	4.0	8.0	Q3
INA213AIRSWR	UQFN	RSW	10	3000	180.0	8.4	1.7	2.1	0.7	4.0	8.0	Q1
INA213BIDCKR	SC70	DCK	6	3000	178.0	9.0	2.4	2.5	1.2	4.0	8.0	Q3
INA213BIDCKR	SC70	DCK	6	3000	178.0	9.0	2.4	2.5	1.2	4.0	8.0	Q3
INA213BIDCKT	SC70	DCK	6	250	178.0	9.0	2.4	2.5	1.2	4.0	8.0	Q3
INA213BIDCKT	SC70	DCK	6	250	178.0	9.0	2.4	2.5	1.2	4.0	8.0	Q3
INA213BIRSWR	UQFN	RSW	10	3000	180.0	8.4	1.7	2.1	0.7	4.0	8.0	Q1
INA213CIDCKR	SC70	DCK	6	3000	178.0	9.0	2.4	2.5	1.2	4.0	8.0	Q3
INA213CIDCKT	SC70	DCK	6	250	178.0	9.0	2.4	2.5	1.2	4.0	8.0	Q3
INA213CIRSWR	UQFN	RSW	10	3000	180.0	8.4	1.7	2.1	0.7	4.0	8.0	Q1
INA214AIDCKR	SC70	DCK	6	3000	179.0	8.4	2.2	2.5	1.2	4.0	8.0	Q3

Device	Package Type	Package Drawing	Pins	SPQ	Reel Diameter (mm)	Reel Width W1 (mm)	A0 (mm)	B0 (mm)	K0 (mm)	P1 (mm)	W (mm)	Pin1 Quadrant
INA214AIDCKR	SC70	DCK	6	3000	178.0	9.0	2.4	2.5	1.2	4.0	8.0	Q3
INA214AIDCKR	SC70	DCK	6	3000	178.0	9.0	2.4	2.5	1.2	4.0	8.0	Q3
INA214AIDCKR	SC70	DCK	6	3000	180.0	8.4	2.41	2.41	1.2	4.0	8.0	Q3
INA214AIDCKT	SC70	DCK	6	250	178.0	9.0	2.4	2.5	1.2	4.0	8.0	Q3
INA214AIRSWR	UQFN	RSW	10	3000	180.0	8.4	1.7	2.1	0.7	4.0	8.0	Q1
INA214BIDCKR	SC70	DCK	6	3000	178.0	9.0	2.4	2.5	1.2	4.0	8.0	Q3
INA214BIDCKR	SC70	DCK	6	3000	178.0	9.0	2.4	2.5	1.2	4.0	8.0	Q3
INA214BIDCKT	SC70	DCK	6	250	178.0	9.0	2.4	2.5	1.2	4.0	8.0	Q3
INA214BIDCKT	SC70	DCK	6	250	178.0	9.0	2.4	2.5	1.2	4.0	8.0	Q3
INA214BIRSWR	UQFN	RSW	10	3000	180.0	8.4	1.7	2.1	0.7	4.0	8.0	Q1
INA214CIDCKR	SC70	DCK	6	3000	178.0	9.0	2.4	2.5	1.2	4.0	8.0	Q3
INA214CIRSWR	UQFN	RSW	10	3000	180.0	8.4	1.7	2.1	0.7	4.0	8.0	Q1
INA215AIDCKR	SC70	DCK	6	3000	178.0	9.0	2.4	2.5	1.2	4.0	8.0	Q3
INA215AIDCKR	SC70	DCK	6	3000	178.0	8.4	2.4	2.5	1.2	4.0	8.0	Q3
INA215AIDCKT	SC70	DCK	6	250	178.0	9.0	2.4	2.5	1.2	4.0	8.0	Q3
INA215AIDCKT	SC70	DCK	6	250	178.0	9.0	2.4	2.5	1.2	4.0	8.0	Q3
INA215BIDCKR	SC70	DCK	6	3000	178.0	9.0	2.4	2.5	1.2	4.0	8.0	Q3
INA215BIDCKR	SC70	DCK	6	3000	178.0	9.0	2.4	2.5	1.2	4.0	8.0	Q3
INA215BIDCKT	SC70	DCK	6	250	178.0	9.0	2.4	2.5	1.2	4.0	8.0	Q3
INA215BIDCKT	SC70	DCK	6	250	178.0	9.0	2.4	2.5	1.2	4.0	8.0	Q3
INA215BIRSWR	UQFN	RSW	10	3000	180.0	8.4	1.7	2.1	0.7	4.0	8.0	Q1
INA215CIDCKR	SC70	DCK	6	3000	178.0	9.0	2.4	2.5	1.2	4.0	8.0	Q3
INA215CIRSWR	UQFN	RSW	10	3000	180.0	8.4	1.7	2.1	0.7	4.0	8.0	Q1

TAPE AND REEL BOX DIMENSIONS

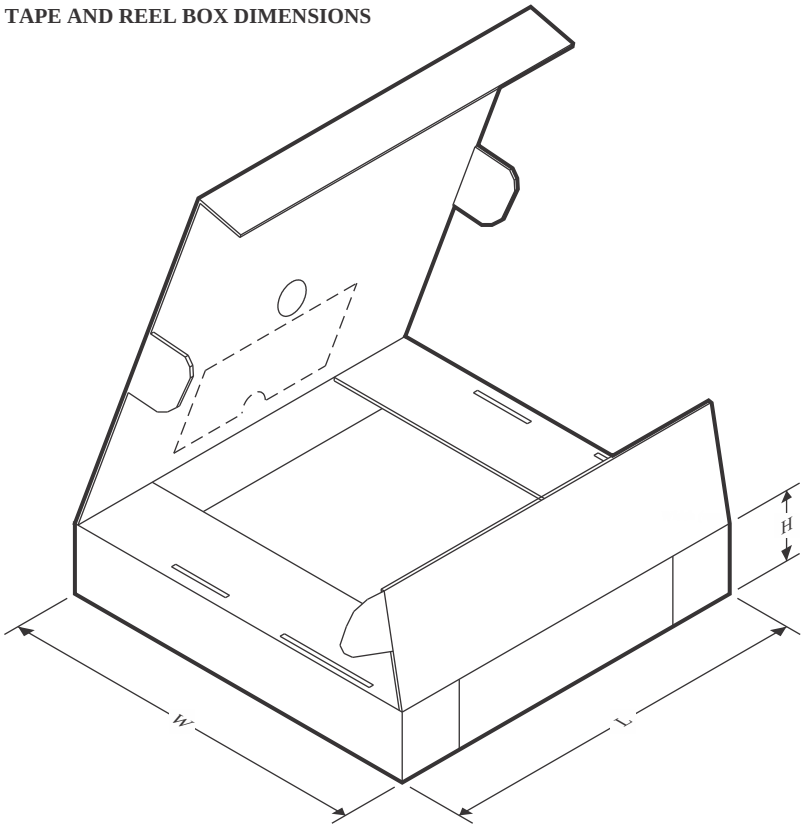

*All dimensions are nominal

Device	Package Type	Package Drawing	Pins	SPQ	Length (mm)	Width (mm)	Height (mm)
INA210AIDCKJ	SC70	DCK	6	10000	366.0	364.0	50.0
INA210AIDCKR	SC70	DCK	6	3000	202.0	201.0	28.0
INA210AIDCKR	SC70	DCK	6	3000	180.0	180.0	18.0
INA210AIDCKR	SC70	DCK	6	3000	190.0	190.0	30.0
INA210AIDCKT	SC70	DCK	6	250	180.0	180.0	18.0
INA210AIDCKT	SC70	DCK	6	250	213.0	191.0	35.0
INA210AIDCKT	SC70	DCK	6	250	190.0	190.0	30.0
INA210AIRSWR	UQFN	RSW	10	3000	200.0	183.0	25.0
INA210BIDCKR	SC70	DCK	6	3000	190.0	190.0	30.0
INA210BIDCKT	SC70	DCK	6	250	180.0	180.0	18.0
INA210BIDCKT	SC70	DCK	6	250	190.0	190.0	30.0
INA210BIRSWR	UQFN	RSW	10	3000	210.0	185.0	35.0
INA210CIDCKR	SC70	DCK	6	3000	340.0	340.0	38.0
INA210CIDCKT	SC70	DCK	6	250	340.0	340.0	38.0
INA210CIRSWR	UQFN	RSW	10	3000	189.0	185.0	36.0
INA211AIDCKR	SC70	DCK	6	3000	223.0	270.0	35.0
INA211AIDCKR	SC70	DCK	6	3000	190.0	190.0	30.0
INA211AIDCKT	SC70	DCK	6	250	190.0	190.0	30.0

Device	Package Type	Package Drawing	Pins	SPQ	Length (mm)	Width (mm)	Height (mm)
INA211AIDCKT	SC70	DCK	6	250	180.0	180.0	18.0
INA211AIDCKT	SC70	DCK	6	250	213.0	191.0	35.0
INA211AIDCKT	SC70	DCK	6	250	223.0	270.0	35.0
INA211BIDCKR	SC70	DCK	6	3000	180.0	180.0	18.0
INA211BIDCKR	SC70	DCK	6	3000	190.0	190.0	30.0
INA211BIDCKT	SC70	DCK	6	250	190.0	190.0	30.0
INA211BIDCKT	SC70	DCK	6	250	180.0	180.0	18.0
INA211BIRSWR	UQFN	RSW	10	3000	200.0	183.0	25.0
INA211CIDCKR	SC70	DCK	6	3000	340.0	340.0	38.0
INA211CIRSWR	UQFN	RSW	10	3000	189.0	185.0	36.0
INA212AIDCKR	SC70	DCK	6	3000	223.0	270.0	35.0
INA212AIDCKR	SC70	DCK	6	3000	180.0	180.0	18.0
INA212AIDCKR	SC70	DCK	6	3000	180.0	180.0	18.0
INA212AIDCKR	SC70	DCK	6	3000	195.0	200.0	45.0
INA212AIDCKT	SC70	DCK	6	250	190.0	190.0	30.0
INA212AIDCKT	SC70	DCK	6	250	223.0	270.0	35.0
INA212AIDCKT	SC70	DCK	6	250	180.0	180.0	18.0
INA212AIDCKT	SC70	DCK	6	250	213.0	191.0	35.0
INA212BIDCKR	SC70	DCK	6	3000	190.0	190.0	30.0
INA212BIDCKR	SC70	DCK	6	3000	180.0	180.0	18.0
INA212BIRSWR	UQFN	RSW	10	3000	210.0	185.0	35.0
INA212CIDCKR	SC70	DCK	6	3000	340.0	340.0	38.0
INA212CIRSWR	UQFN	RSW	10	3000	210.0	185.0	35.0
INA213AIDCKR	SC70	DCK	6	3000	190.0	190.0	30.0
INA213AIDCKR	SC70	DCK	6	3000	202.0	201.0	28.0
INA213AIDCKT	SC70	DCK	6	250	213.0	191.0	35.0
INA213AIDCKT	SC70	DCK	6	250	190.0	190.0	30.0
INA213AIDCKT	SC70	DCK	6	250	223.0	270.0	35.0
INA213AIDCKT	SC70	DCK	6	250	180.0	180.0	18.0
INA213AIRSWR	UQFN	RSW	10	3000	210.0	185.0	35.0
INA213BIDCKR	SC70	DCK	6	3000	180.0	180.0	18.0
INA213BIDCKR	SC70	DCK	6	3000	190.0	190.0	30.0
INA213BIDCKT	SC70	DCK	6	250	180.0	180.0	18.0
INA213BIDCKT	SC70	DCK	6	250	190.0	190.0	30.0
INA213BIRSWR	UQFN	RSW	10	3000	210.0	185.0	35.0
INA213CIDCKR	SC70	DCK	6	3000	340.0	340.0	38.0
INA213CIDCKT	SC70	DCK	6	250	340.0	340.0	38.0
INA213CIRSWR	UQFN	RSW	10	3000	210.0	185.0	35.0
INA214AIDCKR	SC70	DCK	6	3000	213.0	191.0	35.0
INA214AIDCKR	SC70	DCK	6	3000	190.0	190.0	30.0
INA214AIDCKR	SC70	DCK	6	3000	180.0	180.0	18.0
INA214AIDCKR	SC70	DCK	6	3000	202.0	201.0	28.0
INA214AIDCKT	SC70	DCK	6	250	180.0	180.0	18.0

Device	Package Type	Package Drawing	Pins	SPQ	Length (mm)	Width (mm)	Height (mm)
INA214AIRSWR	UQFN	RSW	10	3000	210.0	185.0	35.0
INA214BIDCKR	SC70	DCK	6	3000	180.0	180.0	18.0
INA214BIDCKR	SC70	DCK	6	3000	190.0	190.0	30.0
INA214BIDCKT	SC70	DCK	6	250	190.0	190.0	30.0
INA214BIDCKT	SC70	DCK	6	250	180.0	180.0	18.0
INA214BIRSWR	UQFN	RSW	10	3000	210.0	185.0	35.0
INA214CIDCKR	SC70	DCK	6	3000	180.0	180.0	18.0
INA214CIRSWR	UQFN	RSW	10	3000	210.0	185.0	35.0
INA215AIDCKR	SC70	DCK	6	3000	190.0	190.0	30.0
INA215AIDCKR	SC70	DCK	6	3000	340.0	340.0	38.0
INA215AIDCKT	SC70	DCK	6	250	190.0	190.0	30.0
INA215AIDCKT	SC70	DCK	6	250	340.0	340.0	38.0
INA215BIDCKR	SC70	DCK	6	3000	190.0	190.0	30.0
INA215BIDCKR	SC70	DCK	6	3000	340.0	340.0	38.0
INA215BIDCKT	SC70	DCK	6	250	190.0	190.0	30.0
INA215BIDCKT	SC70	DCK	6	250	340.0	340.0	38.0
INA215BIRSWR	UQFN	RSW	10	3000	210.0	185.0	35.0
INA215CIDCKR	SC70	DCK	6	3000	340.0	340.0	38.0
INA215CIRSWR	UQFN	RSW	10	3000	210.0	185.0	35.0