TAPE AND REEL INFORMATION

REEL DIMENSIONS

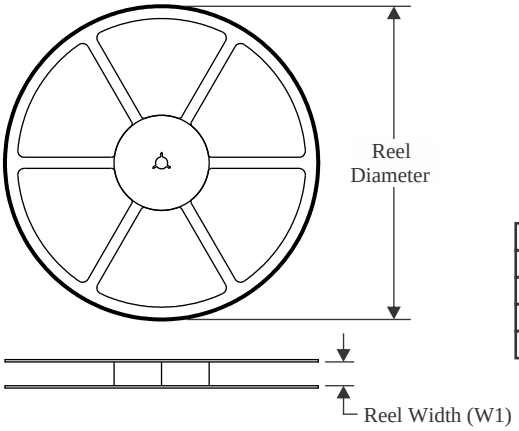

TAPE DIMENSIONS

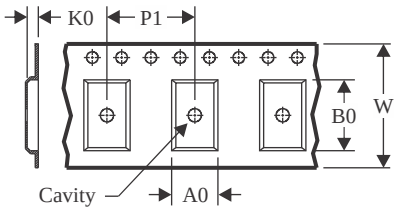

A0	Dimension designed to accommodate the component width
B0	Dimension designed to accommodate the component length
K0	Dimension designed to accommodate the component thickness
W	Overall width of the carrier tape
P1	Pitch between successive cavity centers

QUADRANT ASSIGNMENTS FOR PIN 1 ORIENTATION IN TAPE

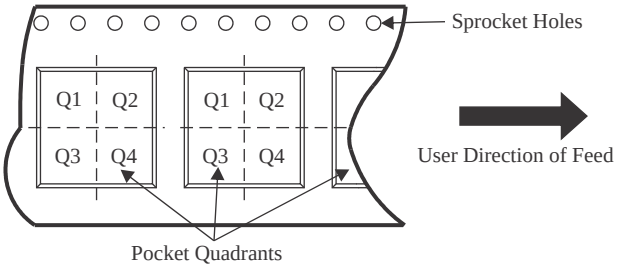

*All dimensions are nominal

Device	Package Type	Package Drawing	Pins	SPQ	Reel Diameter (mm)	Reel Width W1 (mm)	A0 (mm)	B0 (mm)	K0 (mm)	P1 (mm)	W (mm)	Pin1 Quadrant
DS90C124IVSX/NOPB	TQFP	PFB	48	1000	330.0	16.4	9.3	9.3	2.2	12.0	16.0	Q2
DS90C124QVSX/NOPB	TQFP	PFB	48	1000	330.0	16.4	9.3	9.3	2.2	12.0	16.0	Q2
DS90C241IVSX/NOPB	TQFP	PFB	48	1000	330.0	16.4	9.3	9.3	2.2	12.0	16.0	Q2
DS90C241QVSX/NOPB	TQFP	PFB	48	1000	330.0	16.4	9.3	9.3	2.2	12.0	16.0	Q2

TAPE AND REEL BOX DIMENSIONS

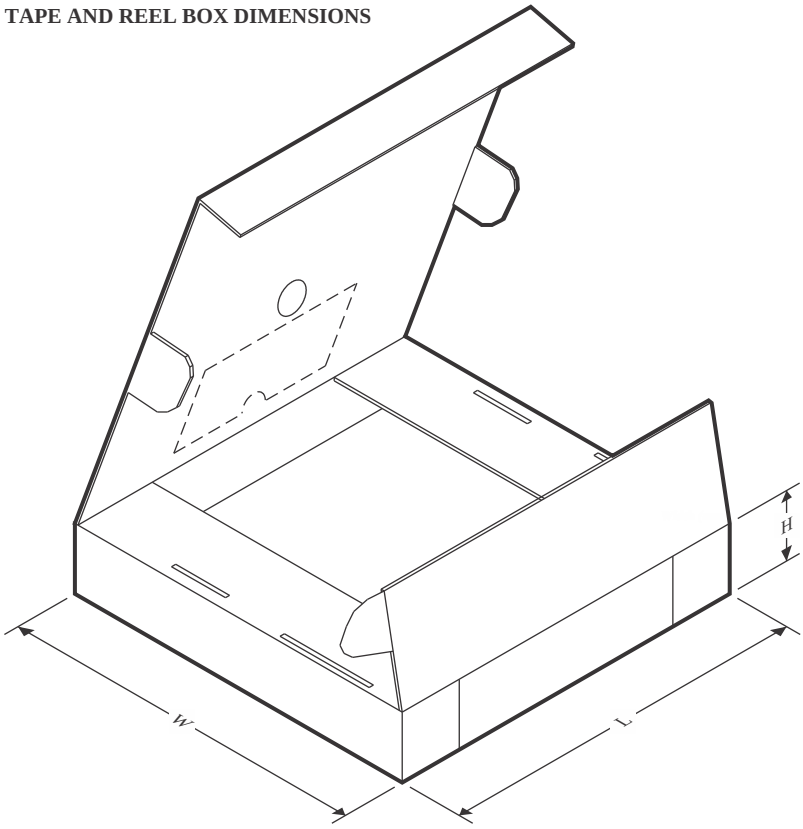

*All dimensions are nominal

Device	Package Type	Package Drawing	Pins	SPQ	Length (mm)	Width (mm)	Height (mm)
DS90C124IVSX/NOPB	TQFP	PFB	48	1000	356.0	356.0	36.0
DS90C124QVSX/NOPB	TQFP	PFB	48	1000	356.0	356.0	36.0
DS90C241IVSX/NOPB	TQFP	PFB	48	1000	356.0	356.0	36.0
DS90C241QVSX/NOPB	TQFP	PFB	48	1000	356.0	356.0	36.0

TRAY

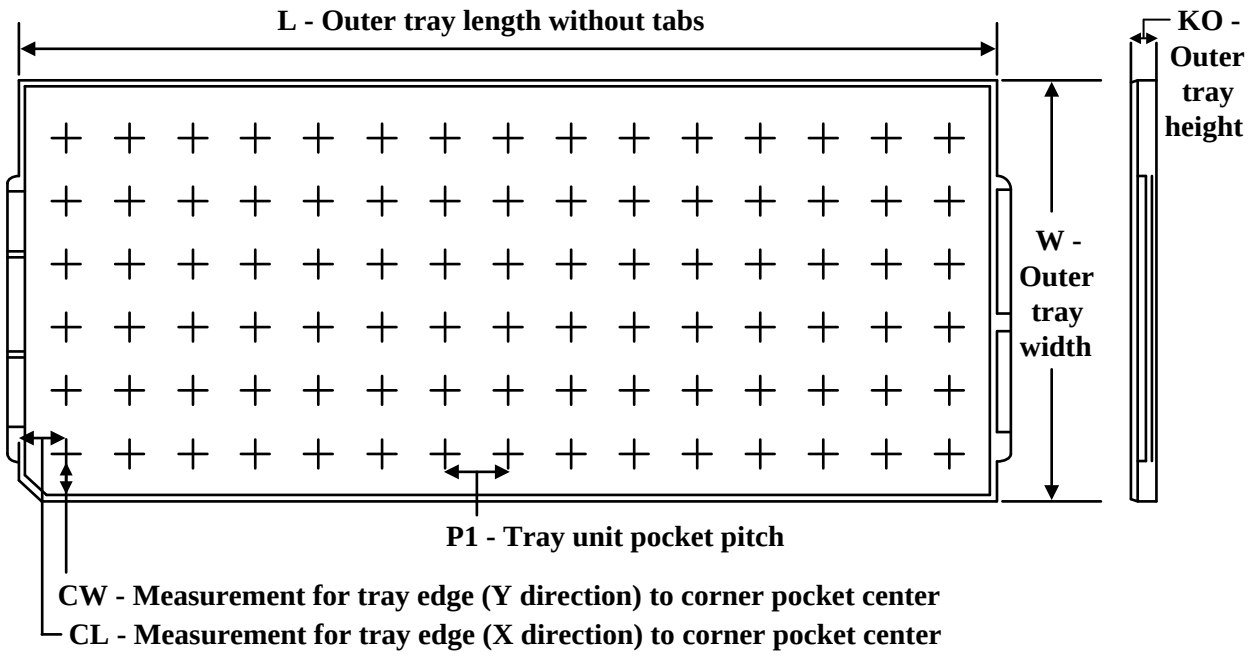

Chamfer on Tray corner indicates Pin 1 orientation of packed units.

*All dimensions are nominal

Device	Package Name	Package Type	Pins	SPQ	Unit array matrix	Max temperature (°C)	L (mm)	W (mm)	K0 (µm)	P1 (mm)	CL (mm)	CW (mm)
DS90C124IVS/NOPB	PFB	TQFP	48	250	10 x 25	150	315	135.9	7620	12.2	11.1	11.25
DS90C124QVS/NOPB	PFB	TQFP	48	250	10 x 25	150	315	135.9	7620	12.2	11.1	11.25
DS90C241IVS/NOPB	PFB	TQFP	48	250	10 x 25	150	315	135.9	7620	12.2	11.1	11.25
DS90C241QVS/NOPB	PFB	TQFP	48	250	10 x 25	150	315	135.9	7620	12.2	11.1	11.25