TAPE AND REEL INFORMATION

REEL DIMENSIONS

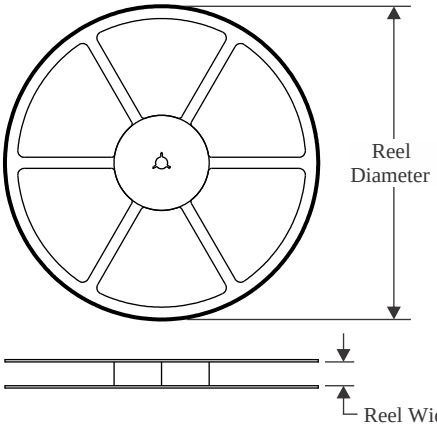

TAPE DIMENSIONS

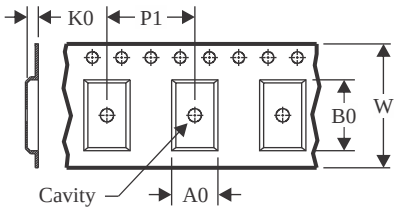

A0	Dimension designed to accommodate the component width
B0	Dimension designed to accommodate the component length
K0	Dimension designed to accommodate the component thickness
W	Overall width of the carrier tape
P1	Pitch between successive cavity centers

QUADRANT ASSIGNMENTS FOR PIN 1 ORIENTATION IN TAPE

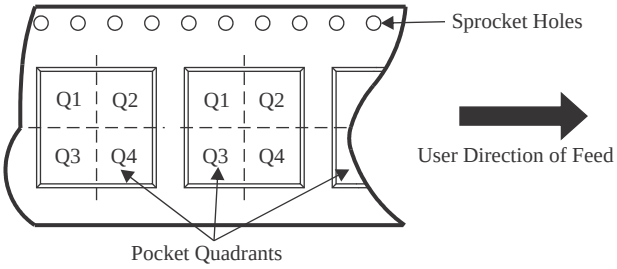

*All dimensions are nominal

Device	Package Type	Package Drawing	Pins	SPQ	Reel Diameter (mm)	Reel Width W1 (mm)	A0 (mm)	B0 (mm)	K0 (mm)	P1 (mm)	W (mm)	Pin1 Quadrant
BQ7791500PWR	TSSOP	PW	24	2000	330.0	16.4	6.95	8.3	1.6	8.0	16.0	Q1
BQ7791500PWT	TSSOP	PW	24	250	180.0	16.4	6.95	8.3	1.6	8.0	16.0	Q1
BQ7791501PWR	TSSOP	PW	24	2000	330.0	16.4	6.95	8.3	1.6	8.0	16.0	Q1
BQ7791501PWT	TSSOP	PW	24	250	180.0	16.4	6.95	8.3	1.6	8.0	16.0	Q1
BQ7791502PWR	TSSOP	PW	24	2000	330.0	16.4	6.95	8.3	1.6	8.0	16.0	Q1
BQ7791504PWR	TSSOP	PW	24	2000	330.0	16.4	6.95	8.3	1.6	8.0	16.0	Q1
BQ7791506PWR	TSSOP	PW	24	2000	330.0	16.4	6.95	8.3	1.6	8.0	16.0	Q1
BQ7791508PWR	TSSOP	PW	24	2000	330.0	16.4	6.95	8.3	1.6	8.0	16.0	Q1
BQ7791513PWR	TSSOP	PW	24	2000	330.0	16.4	6.95	8.3	1.6	8.0	16.0	Q1
BQ7791514PWR	TSSOP	PW	24	2000	330.0	16.4	6.95	8.3	1.6	8.0	16.0	Q1

TAPE AND REEL BOX DIMENSIONS

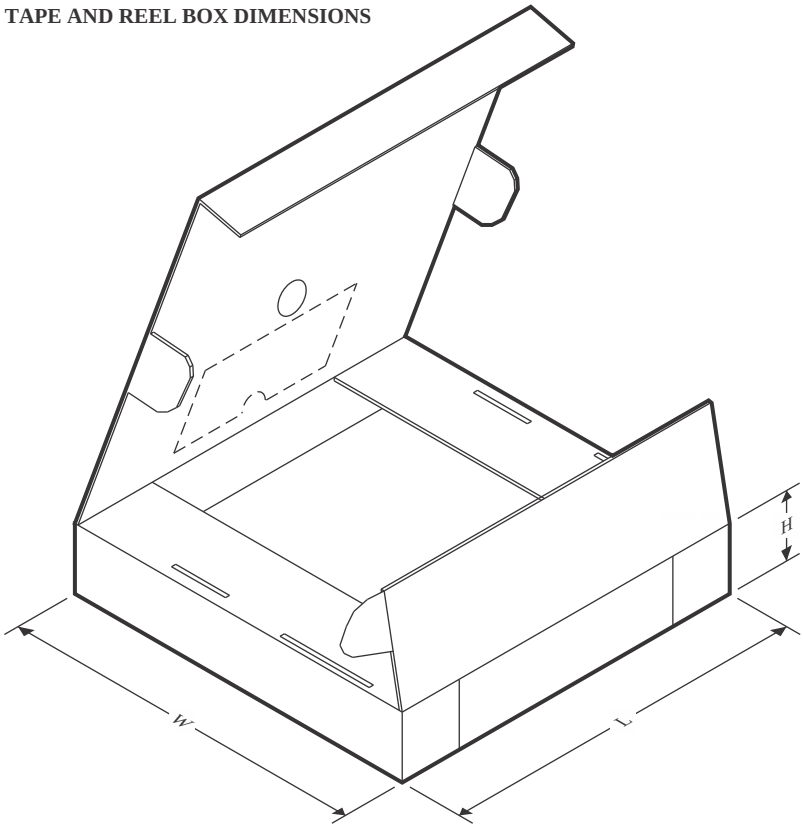

*All dimensions are nominal

Device	Package Type	Package Drawing	Pins	SPQ	Length (mm)	Width (mm)	Height (mm)
BQ7791500PWR	TSSOP	PW	24	2000	356.0	356.0	35.0
BQ7791500PWT	TSSOP	PW	24	250	210.0	185.0	35.0
BQ7791501PWR	TSSOP	PW	24	2000	356.0	356.0	35.0
BQ7791501PWT	TSSOP	PW	24	250	210.0	185.0	35.0
BQ7791502PWR	TSSOP	PW	24	2000	356.0	356.0	35.0
BQ7791504PWR	TSSOP	PW	24	2000	356.0	356.0	35.0
BQ7791506PWR	TSSOP	PW	24	2000	356.0	356.0	35.0
BQ7791508PWR	TSSOP	PW	24	2000	356.0	356.0	35.0
BQ7791513PWR	TSSOP	PW	24	2000	356.0	356.0	35.0
BQ7791514PWR	TSSOP	PW	24	2000	356.0	356.0	35.0

TUBE

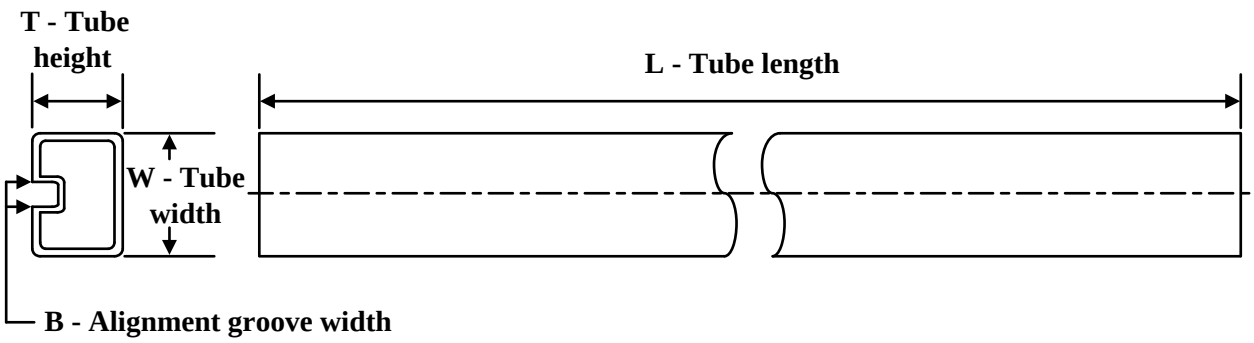

*All dimensions are nominal

Device	Package Name	Package Type	Pins	SPQ	L (mm)	W (mm)	T (µm)	B (mm)
BQ7791502PW	PW	TSSOP	24	60	530	10.2	3600	3.5
BQ7791504PW	PW	TSSOP	24	60	530	10.2	3600	3.5
BQ7791506PW	PW	TSSOP	24	60	530	10.2	3600	3.5
BQ7791508PW	PW	TSSOP	24	60	530	10.2	3600	3.5