TAPE AND REEL INFORMATION

REEL DIMENSIONS

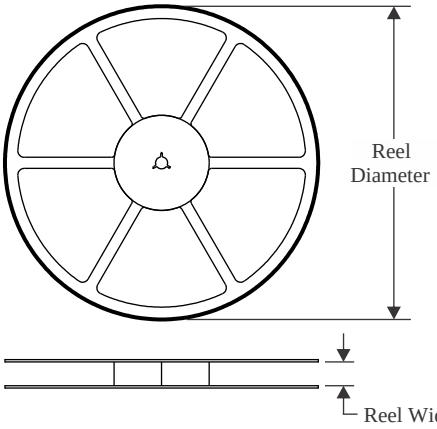

TAPE DIMENSIONS

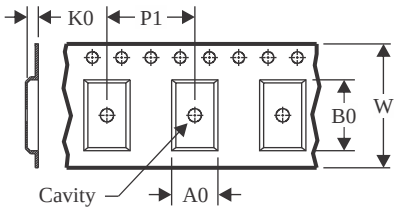

A0	Dimension designed to accommodate the component width
B0	Dimension designed to accommodate the component length
K0	Dimension designed to accommodate the component thickness
W	Overall width of the carrier tape
P1	Pitch between successive cavity centers

QUADRANT ASSIGNMENTS FOR PIN 1 ORIENTATION IN TAPE

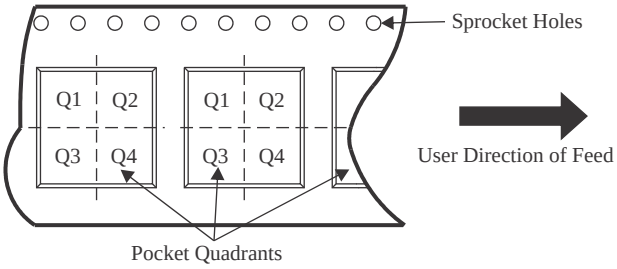

*All dimensions are nominal

Device	Package Type	Package Drawing	Pins	SPQ	Reel Diameter (mm)	Reel Width W1 (mm)	A0 (mm)	B0 (mm)	K0 (mm)	P1 (mm)	W (mm)	Pin1 Quadrant
BQ294502DRVR	WSON	DRV	6	3000	180.0	8.4	2.3	2.3	1.15	4.0	8.0	Q2
BQ294502DRVR	WSON	DRV	6	3000	180.0	8.4	2.3	2.3	1.15	4.0	8.0	Q2
BQ294502DRVT	WSON	DRV	6	250	180.0	8.4	2.3	2.3	1.15	4.0	8.0	Q2
BQ294502DRVT	WSON	DRV	6	250	180.0	8.4	2.3	2.3	1.15	4.0	8.0	Q2
BQ294504DRVR	WSON	DRV	6	3000	180.0	8.4	2.3	2.3	1.15	4.0	8.0	Q2
BQ294504DRVR	WSON	DRV	6	3000	180.0	8.4	2.3	2.3	1.15	4.0	8.0	Q2
BQ294504DRVT	WSON	DRV	6	250	180.0	8.4	2.3	2.3	1.15	4.0	8.0	Q2
BQ294504DRVT	WSON	DRV	6	250	180.0	8.4	2.3	2.3	1.15	4.0	8.0	Q2
BQ294506DRVR	WSON	DRV	6	3000	180.0	8.4	2.3	2.3	1.15	4.0	8.0	Q2
BQ294506DRVR	WSON	DRV	6	3000	180.0	8.4	2.3	2.3	1.15	4.0	8.0	Q2
BQ294506DRVT	WSON	DRV	6	250	180.0	8.4	2.3	2.3	1.15	4.0	8.0	Q2
BQ294512DRVR	WSON	DRV	6	3000	180.0	8.4	2.3	2.3	1.15	4.0	8.0	Q2
BQ294512DRVT	WSON	DRV	6	250	180.0	8.4	2.3	2.3	1.15	4.0	8.0	Q2
BQ294522DRVR	WSON	DRV	6	3000	180.0	8.4	2.3	2.3	1.15	4.0	8.0	Q2
BQ294522DRVT	WSON	DRV	6	250	180.0	8.4	2.3	2.3	1.15	4.0	8.0	Q2
BQ294524DRVR	WSON	DRV	6	3000	180.0	8.4	2.3	2.3	1.15	4.0	8.0	Q2

Device	Package Type	Package Drawing	Pins	SPQ	Reel Diameter (mm)	Reel Width W1 (mm)	A0 (mm)	B0 (mm)	K0 (mm)	P1 (mm)	W (mm)	Pin1 Quadrant
BQ294524DRVR	WSON	DRV	6	3000	180.0	8.4	2.3	2.3	1.15	4.0	8.0	Q2
BQ294524DRVT	WSON	DRV	6	250	180.0	8.4	2.3	2.3	1.15	4.0	8.0	Q2
BQ294524DRVT	WSON	DRV	6	250	180.0	8.4	2.3	2.3	1.15	4.0	8.0	Q2
BQ294532DRVR	WSON	DRV	6	3000	180.0	8.4	2.3	2.3	1.15	4.0	8.0	Q2
BQ294532DRVR	WSON	DRV	6	3000	180.0	8.4	2.3	2.3	1.15	4.0	8.0	Q2
BQ294532DRVT	WSON	DRV	6	250	180.0	8.4	2.3	2.3	1.15	4.0	8.0	Q2
BQ294532DRVT	WSON	DRV	6	250	180.0	8.4	2.3	2.3	1.15	4.0	8.0	Q2
BQ294533DRVR	WSON	DRV	6	3000	180.0	8.4	2.3	2.3	1.15	4.0	8.0	Q2
BQ294533DRVT	WSON	DRV	6	250	180.0	8.4	2.3	2.3	1.15	4.0	8.0	Q2
BQ294534DRVR	WSON	DRV	6	3000	180.0	8.4	2.3	2.3	1.15	4.0	8.0	Q2
BQ294582DRVR	WSON	DRV	6	3000	180.0	8.4	2.3	2.3	1.15	4.0	8.0	Q2
BQ294582DRVR	WSON	DRV	6	3000	180.0	8.4	2.3	2.3	1.15	4.0	8.0	Q2
BQ294582DRVT	WSON	DRV	6	250	180.0	8.4	2.3	2.3	1.15	4.0	8.0	Q2
BQ294582DRVT	WSON	DRV	6	250	180.0	8.4	2.3	2.3	1.15	4.0	8.0	Q2
BQ294592DRVR	WSON	DRV	6	3000	180.0	8.4	2.3	2.3	1.15	4.0	8.0	Q2
BQ294592DRVR	WSON	DRV	6	3000	180.0	8.4	2.3	2.3	1.15	4.0	8.0	Q2
BQ294592DRVT	WSON	DRV	6	250	180.0	8.4	2.3	2.3	1.15	4.0	8.0	Q2
BQ294592DRVT	WSON	DRV	6	250	180.0	8.4	2.3	2.3	1.15	4.0	8.0	Q2

TAPE AND REEL BOX DIMENSIONS

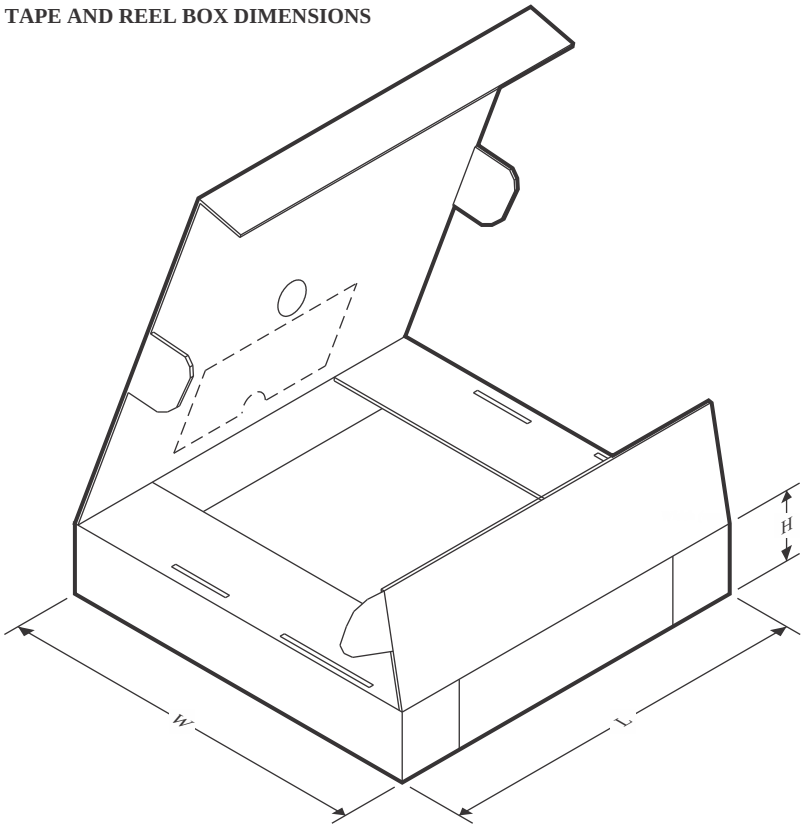

*All dimensions are nominal

Device	Package Type	Package Drawing	Pins	SPQ	Length (mm)	Width (mm)	Height (mm)
BQ294502DRVR	WSON	DRV	6	3000	210.0	185.0	35.0
BQ294502DRVR	WSON	DRV	6	3000	182.0	182.0	20.0
BQ294502DRVT	WSON	DRV	6	250	210.0	185.0	35.0
BQ294502DRVT	WSON	DRV	6	250	182.0	182.0	20.0
BQ294504DRVR	WSON	DRV	6	3000	210.0	185.0	35.0
BQ294504DRVR	WSON	DRV	6	3000	210.0	185.0	35.0
BQ294504DRVT	WSON	DRV	6	250	210.0	185.0	35.0
BQ294504DRVT	WSON	DRV	6	250	210.0	185.0	35.0
BQ294506DRVR	WSON	DRV	6	3000	210.0	185.0	35.0
BQ294506DRVR	WSON	DRV	6	3000	210.0	185.0	35.0
BQ294506DRVT	WSON	DRV	6	250	210.0	185.0	35.0
BQ294512DRVR	WSON	DRV	6	3000	210.0	185.0	35.0
BQ294512DRVT	WSON	DRV	6	250	182.0	182.0	20.0
BQ294522DRVR	WSON	DRV	6	3000	210.0	185.0	35.0
BQ294522DRVT	WSON	DRV	6	250	182.0	182.0	20.0
BQ294524DRVR	WSON	DRV	6	3000	210.0	185.0	35.0
BQ294524DRVR	WSON	DRV	6	3000	210.0	185.0	35.0
BQ294524DRVT	WSON	DRV	6	250	210.0	185.0	35.0

Device	Package Type	Package Drawing	Pins	SPQ	Length (mm)	Width (mm)	Height (mm)
BQ294524DRVT	WSON	DRV	6	250	210.0	185.0	35.0
BQ294532DRVR	WSON	DRV	6	3000	210.0	185.0	35.0
BQ294532DRVR	WSON	DRV	6	3000	210.0	185.0	35.0
BQ294532DRVT	WSON	DRV	6	250	210.0	185.0	35.0
BQ294532DRVT	WSON	DRV	6	250	210.0	185.0	35.0
BQ294533DRVR	WSON	DRV	6	3000	210.0	185.0	35.0
BQ294533DRVT	WSON	DRV	6	250	210.0	185.0	35.0
BQ294534DRVR	WSON	DRV	6	3000	210.0	185.0	35.0
BQ294582DRVR	WSON	DRV	6	3000	210.0	185.0	35.0
BQ294582DRVR	WSON	DRV	6	3000	210.0	185.0	35.0
BQ294582DRVT	WSON	DRV	6	250	210.0	185.0	35.0
BQ294582DRVT	WSON	DRV	6	250	210.0	185.0	35.0
BQ294592DRVR	WSON	DRV	6	3000	210.0	185.0	35.0
BQ294592DRVR	WSON	DRV	6	3000	210.0	185.0	35.0
BQ294592DRVT	WSON	DRV	6	250	210.0	185.0	35.0
BQ294592DRVT	WSON	DRV	6	250	210.0	185.0	35.0