TAPE AND REEL INFORMATION

REEL DIMENSIONS

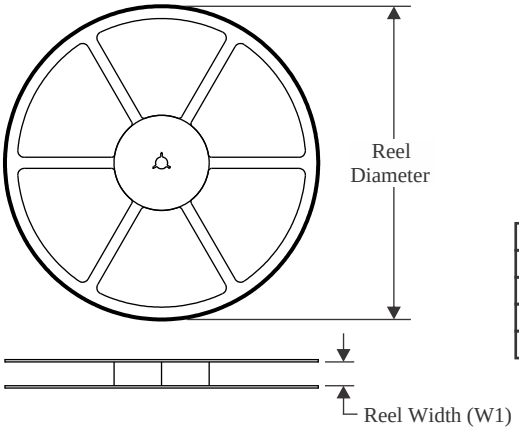

TAPE DIMENSIONS

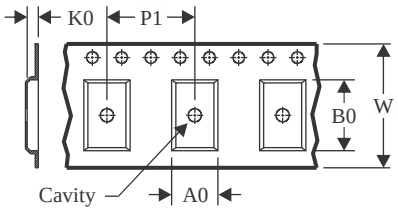

A0	Dimension designed to accommodate the component width
B0	Dimension designed to accommodate the component length
K0	Dimension designed to accommodate the component thickness
W	Overall width of the carrier tape
P1	Pitch between successive cavity centers

QUADRANT ASSIGNMENTS FOR PIN 1 ORIENTATION IN TAPE

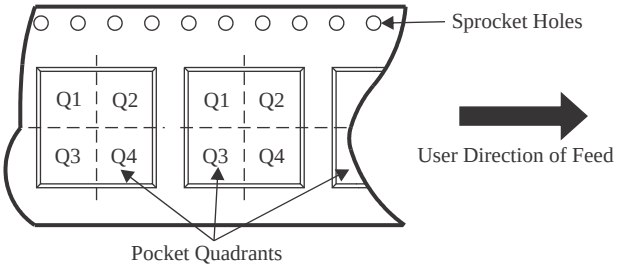

*All dimensions are nominal

Device	Package Type	Package Drawing	Pins	SPQ	Reel Diameter (mm)	Reel Width W1 (mm)	A0 (mm)	B0 (mm)	K0 (mm)	P1 (mm)	W (mm)	Pin1 Quadrant
AMC1200BDUBR	SOP	DUB	8	350	330.0	24.4	13.1	9.75	6.0	16.0	24.0	Q1
AMC1200BDUBRG4	SOP	DUB	8	350	330.0	24.4	13.1	9.75	6.0	16.0	24.0	Q1
AMC1200BDWVR	SOIC	DWV	8	1000	330.0	16.4	12.15	6.2	3.05	16.0	16.0	Q1
AMC1200BDWVRG4	SOIC	DWV	8	1000	330.0	16.4	12.15	6.2	3.05	16.0	16.0	Q1
AMC1200SDUBR	SOP	DUB	8	350	330.0	24.4	13.1	9.75	6.0	16.0	24.0	Q1
AMC1200SDUBRG4	SOP	DUB	8	350	330.0	24.4	13.1	9.75	6.0	16.0	24.0	Q1

TAPE AND REEL BOX DIMENSIONS

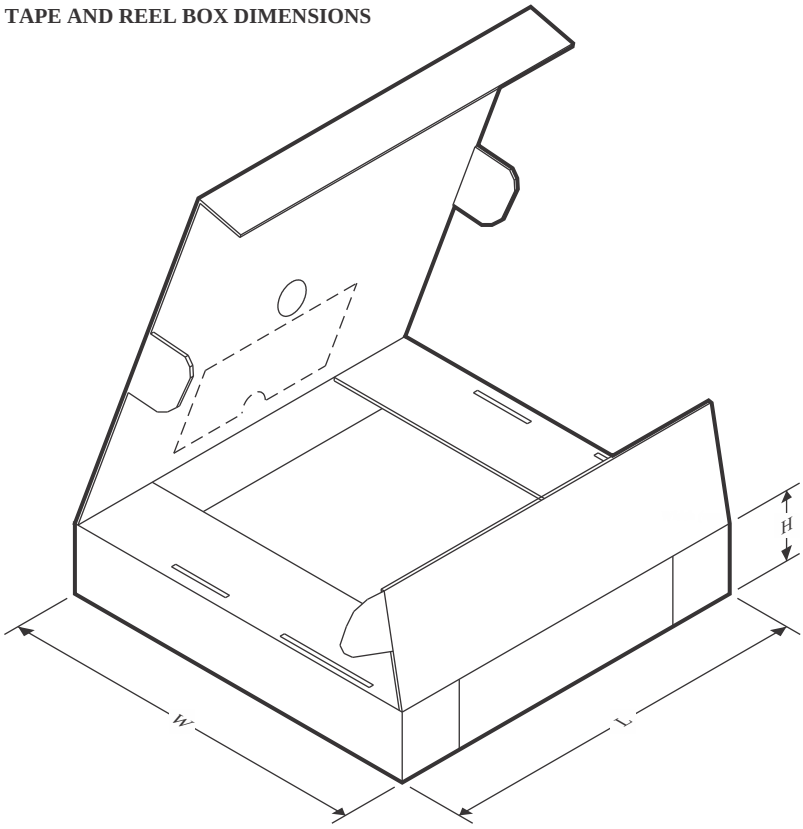

*All dimensions are nominal

Device	Package Type	Package Drawing	Pins	SPQ	Length (mm)	Width (mm)	Height (mm)
AMC1200BDUBR	SOP	DUB	8	350	356.0	356.0	45.0
AMC1200BDUBRG4	SOP	DUB	8	350	356.0	356.0	45.0
AMC1200BDWVR	SOIC	DWV	8	1000	353.0	353.0	32.0
AMC1200BDWVRG4	SOIC	DWV	8	1000	353.0	353.0	32.0
AMC1200SDUBR	SOP	DUB	8	350	356.0	356.0	45.0
AMC1200SDUBRG4	SOP	DUB	8	350	356.0	356.0	45.0

TUBE

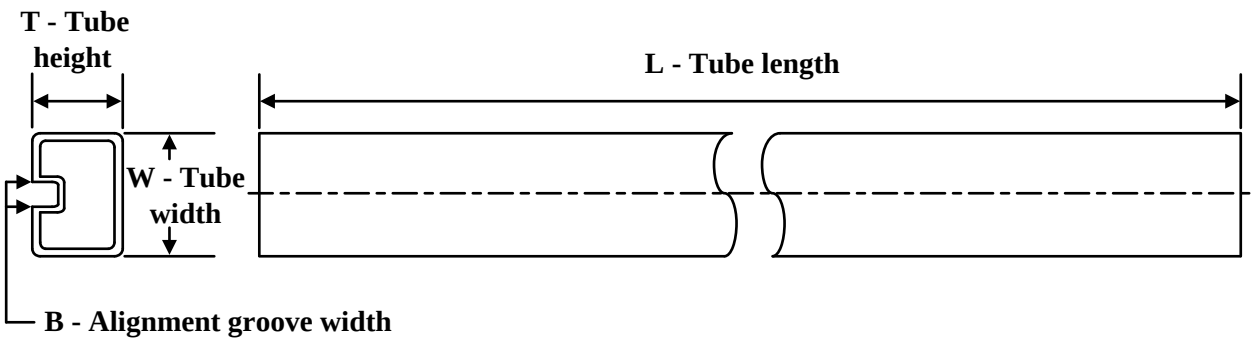

*All dimensions are nominal

Device	Package Name	Package Type	Pins	SPQ	L (mm)	W (mm)	T (µm)	B (mm)
AMC1200BDUB	DUB	SOP	8	50	532.13	13.51	7.36	6.91
AMC1200BDUB	DUB	SOP	8	50	532.13	13	7300	6.6
AMC1200BDUB.A	DUB	SOP	8	50	532.13	13	7300	6.6
AMC1200BDUB.A	DUB	SOP	8	50	532.13	13.51	7.36	6.91
AMC1200BDWV	DWV	SOIC	8	64	505.46	13.94	4826	6.6
AMC1200BDWV.A	DWV	SOIC	8	64	505.46	13.94	4826	6.6
AMC1200SDUB	DUB	SOP	8	50	532.13	13.51	7.36	6.91
AMC1200SDUB	DUB	SOP	8	50	532.13	13	7300	6.6
AMC1200SDUB.A	DUB	SOP	8	50	532.13	13.51	7.36	6.91
AMC1200SDUB.A	DUB	SOP	8	50	532.13	13	7300	6.6