EVM User's Guide: INA3221EVM

INA3221EVM 修订版 A 模型用户指南和软件教程

说明

INA3221 评估模块 (EVM) 是用于评估 INA3221 主要特性和性能的平台。该 EVM 附带了控制器 (SM-USB-DIG) 和图形用户界面 (GUI) 支持，用于器件寄存器的读取和写入操作。

特性

- 包括 SM-USB-DIG 平台
- 提供 GUI 支持，用于器件寄存器的读取和写入操作
- 通过 SM-USB-DIG 或外部电源方便地供电

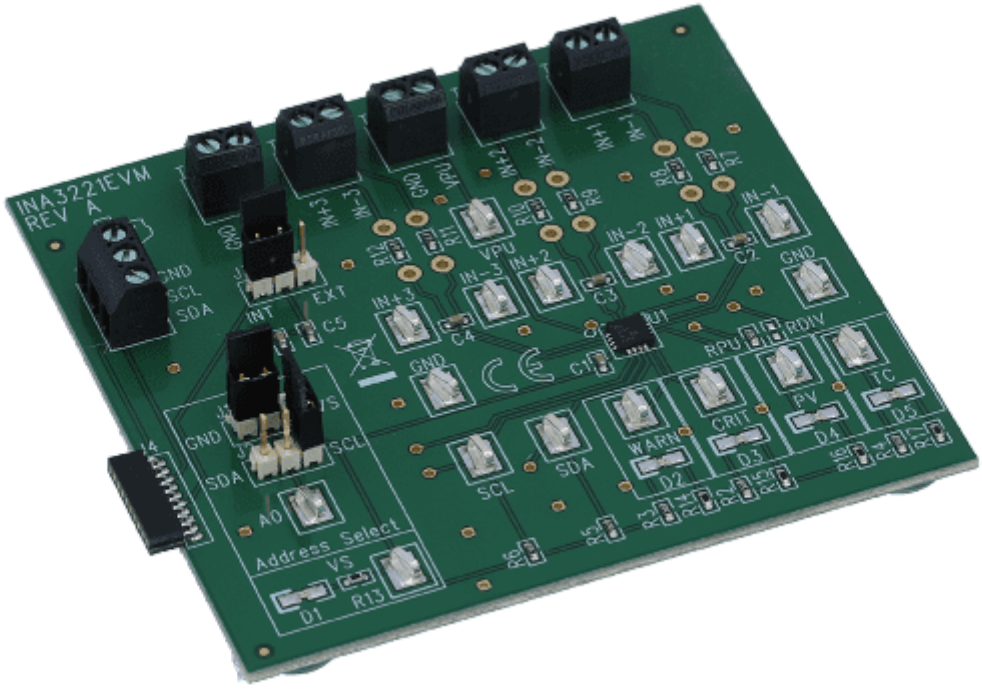

INA3221EVM

English Document: SBOU126
Copyright © 2026 Texas Instruments Incorporated

1 评估模块概述

1.1 简介

本用户指南介绍了 INA3221EVM 评估板的特性、运行和使用情况。本文件论述了如何设置和配置相关的软件及硬件，并回顾了程序运行的各个方面。本文档中的*评估板*、*评估模块* 和 *EVM* 等术语指的是 INA3221EVM。本用户指南还包含有关操作过程、输入/输出连接、电气原理图、印刷电路板 (PCB) 布局图和 EVM 器件列表的信息。

1.2 套件内容

表 1-1 汇总了 INA3221EVM 套件的内含物。图 1-1 显示了所有附带的硬件。如果缺少任何元件，请与离您最近的德州仪器 (TI) 产品信息中心联系。查看 TI 网站 (www.ti.com) 上的 INA3221 产品文件夹，以验证您拥有相关软件的最新版本。

表 1-1. INA3221EVM 套件内容

条目	数量
INA3221EVM PCB 测试板	1
SM-USB-DIG 平台 PCB	1
USB 扩展器电缆	1
SM-DIG 连接器带状电缆	1
用户指南 CD-ROM	1

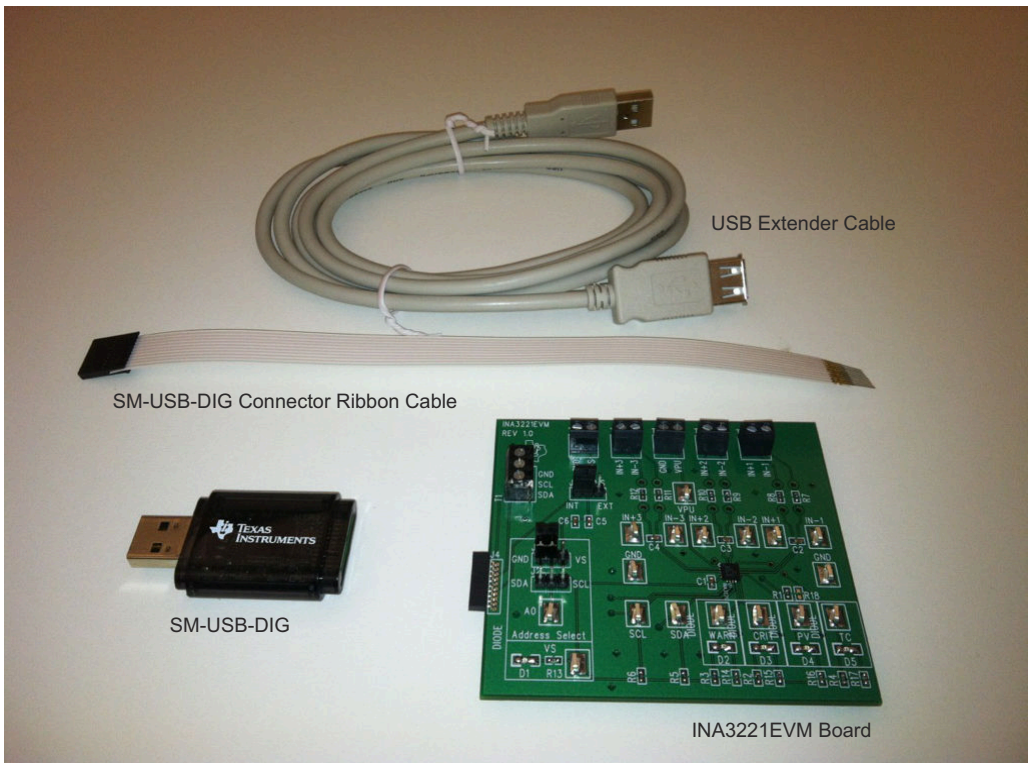

图 1-1. INA3221EVM 套件附带的硬件

English Document: SBOU126
Copyright © 2026 Texas Instruments Incorporated

1.3 器件信息

INA3221 是一款具有 I2C™ 接口的三通道高侧电流传感器和总线电压监测器。INA3221 同时监测分流压降和总线供电电压，并支持可编程的转换时间和平均模式。INA3221 提供临界警报和警告警报，以检测每个通道的多个可编程超限条件。本文档概要介绍了 INA3221EVM，以及使用该评估模块时需要考虑的特性和功能。

2 硬件

2.1 设置

图 2-1 展示了 INA3221EVM 系统的整体设置。PC 运行与 SM-USB-DIG 平台通信的软件，而后者生成用于与 INA3221 测试板通信的模拟和数字信号。利用 INA3221 测试板上的连接器，用户可在测试条件下连接系统，并监测功率、电流和电压。

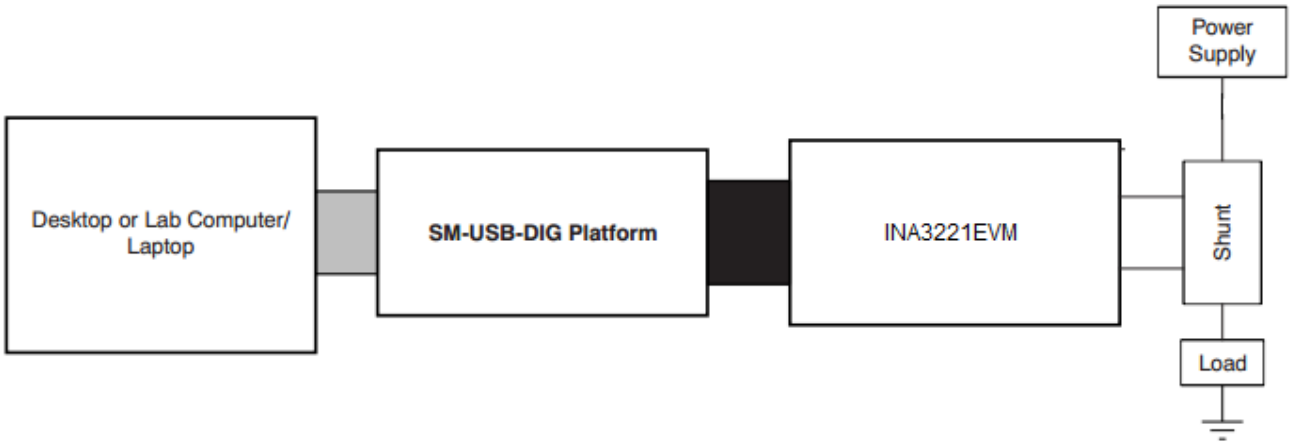

图 2-1. INA3221EVM 硬件设置

2.1.1 INA3221 硬件的工作原理

图 2-2 中显示了 INA3221 测试板硬件设置的方框图。PCB 功能可连接 SM-USB-DIG 平台板上的 I²C 接口和通用输入/输出 (GPIO) 引脚。该 PCB 还提供了用于外部分流电压、总线电压和接地连接的连接点。

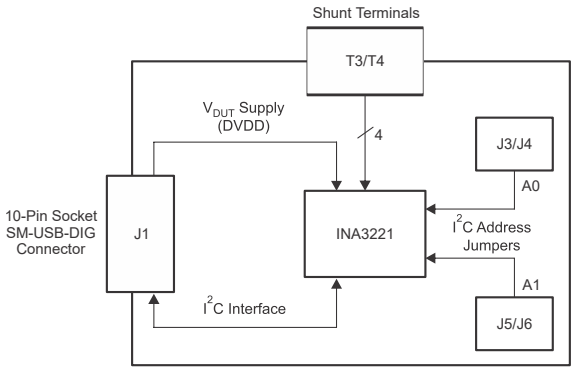

图 2-2. INA3221EVM 测试板方框图

2.1.2 H1 信号定义（10 引脚公连接器插座）

表 2-1 列出了用于在 INA3221EVM 和 SM-USB-DIG 之间进行通信的 10 引脚连接器插座的引脚排列。请注意，INA3221EVM 仅使用必要的 I²C 通信线路（引脚 1 和 3）以及 V_{DUT} 和 GND 引脚（引脚 6 和引脚 8）向 INA3221 芯片发出命令。

English Document: SBOU126
Copyright © 2026 Texas Instruments Incorporated

表 2-1. 引脚连接

U1 上的引脚	信号	说明
1	I2C_SCL	I^2C 时钟信号 (SCL)
2	CTRL/MEAS4	GPIO：控制输出或测量输入
3	I2C_SDA1	I^2C 数据信号 (SDA)
4	CTRL/MEAS5	GPIO：控制输出或测量输入
5	SPI_DOUT1	SPI 数据输出 (PICO)
6	VDUT	可切换 DUT 电源：+3.3V、+5V、Hi-Z (已断开连接) (1)
7	SPI_CLK	SPI 时钟信号 (SCLK)
8	GND	电源回路 (GND)
9	SPI_CS1	SPI 片选信号 ($\overline{CS}$)
10	SPI_DIN1	SPI 数据输入 (POCI)

(1) 当 VDUT 为高阻态时，所有数字 I/O 也为高阻态。

Copyright © 2026 Texas Instruments Incorporated

2.1.2.1 SM-USB-DIG 平台工作原理

图 2-3 所示为 SM-USB-DIG 平台的方框图。此平台是一种通用数据采集系统，用于多种不同的德州仪器 (TI) 评估模块。运行详细信息包含在一个单独的文档中。图 2-3 中显示的方框图简要概述了该平台。

SM-USB-DIG 平台的主要控制器件是 TUSB3210。TUSB3210 是一款内置 USB 接口的 8052 微控制器。微控制器接收来自主机的信息，并将其解释为电源、I²C、SPI 和其他数字 I/O 模式。在数字 I/O 事务期间，微控制器会读取连接到 I/O 接口的任何器件的响应。该器件的响应被发送回 PC，由主机对这些信息进行解释。

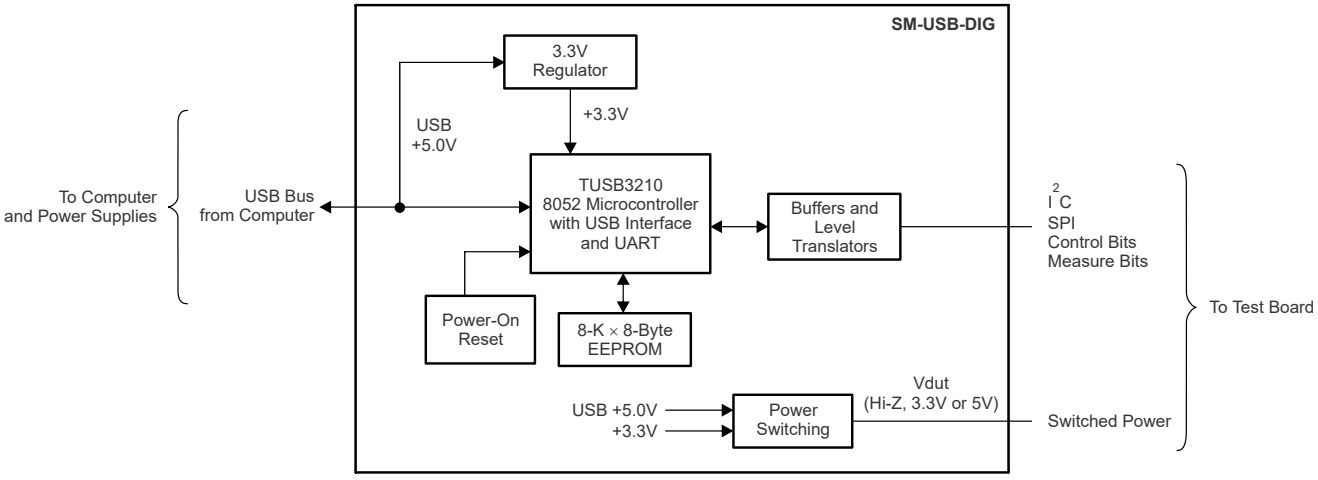

图 2-3. SM-USB-DIG 平台方框图

2.2 INA3221EVM 硬件概览

设置 INA3221EVM 硬件涉及将两个 EVM PCB 连接在一起、加电、连接 USB 电缆以及设置跳线。本节详细介绍了该过程。

2.2.1 静电放电警告

小心

INA3221EVM 上的许多元件都容易受到静电放电 (ESD) 的损坏。建议客户在开箱和搬运 EVM 时遵守适当的 ESD 处理预防措施，包括在经批准的 ESD 工作站上使用接地腕带。

2.2.2 连接硬件

要将 INA3221EVM 和 SM-USB-DIG 平台连接在一起，请将 10 引脚连接器的插座和插头端轻轻滑动在一起。验证两个连接器完全推在一起；连接松动可能会导致间歇运行。

Copyright © 2026 Texas Instruments Incorporated

2.2.3 将 USB 电缆连接至 SM-USB-DIG 平台

图 2-4 展示了首次将 SM-USB-DIG 平台板连接到 PC USB 端口时的典型响应。SM-USB-DIG 和 PC USB 端口之间的连接如所示图 2-5。通常，计算机上会显示 *Found New Hardware, USB Device* 弹出对话框。该弹出窗口通常会变为 *Found New Hardware, USB Human Interface Device*。此弹出信息指示器件已就绪并可供使用。SM-USB-DIG 平台使用作为 Microsoft®Windows® 操作系统一部分的人机界面设备驱动程序。

在某些情况下，会弹出 Windows *Add Hardware Wizard*。如果出现此提示，请在系统请求安装驱动程序时点击 **Yes**，允许系统器件管理器安装人机界面驱动程序。然后，Windows 使用 图 2-4 中显示的消息确认驱动程序的安装。



图 2-4. SM-USB-DIG 平台驱动程序安装确认

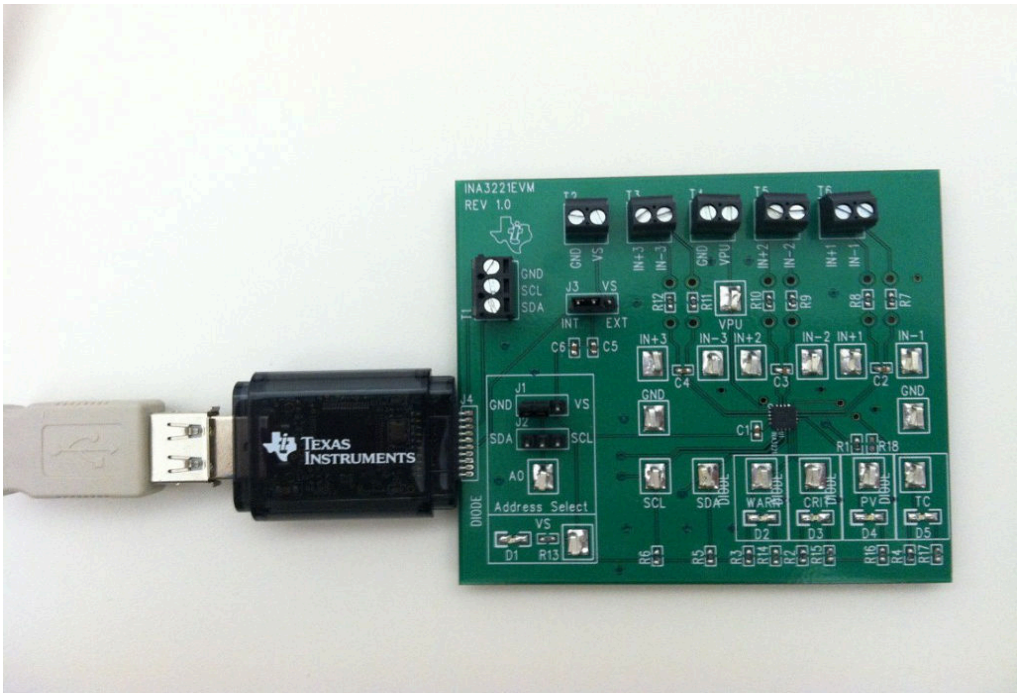

图 2-5. 将 USB 电缆连接至 SM-USB-DIG 平台

2.2.4 INA3221EVM 特性

本节介绍了 INA3221EVM 测试板上的一些硬件特性。

2.2.4.1 J3：I^2C V_S 控制设置

跳线 J3 用于选择 INA3221 电源引脚连接到的引脚。如果 J3 设置为 INT 位置，VS 引脚将连接到从 SM-USB-DIG 平台生成的可切换 V_{DUT} 信号。该电压可设置为 3.3V 或 5V，具体取决于电压在软件中的配置方式。当 J3 设置在 INT 位置时，INA3221EVM 软件中的 VS 电源按钮能够控制是打开还是关闭 V_{DUT} 电源电压。当 J3 设置在 EXT 位置时，连接到端子 T2 的外部电源可用于为 INA3221 提供电源电压。

English Document: SBOU126
Copyright © 2026 Texas Instruments Incorporated

2.2.4.2 J1 和 J2：I²C 地址硬件设置 (A0)

跳线 J1 和 J2 用于设置 INA3221 上 A0I²C 地址引脚的硬件设置。使用 J1，A0 地址可以设置为逻辑“1”或逻辑“0”。使用 J2，可以将 A0 地址设置为 SCL 或 SDA 通信线路。确保仅单独连接 J1 或 J2；如果不将这些线路分开，可能会导致电路板短路以及 I²C 通信线路出现问题。要了解如何配置 INA3221EVM 软件以匹配 J1 和 J2 硬件设置，请参阅节 3.2.2.1。

2.2.4.3 外部 I²C 线路和端子块 T1

INA3221EVM 的 I²C 通信线路连接到两个源：SM-USB-DIG 的内部 I²C 通信线路和端子块 T1。如果用户想要添加与 SM-USB-DIG 分开的外部信号，只需断开 SM-USB-DIG 与 INA3221EVM 电路板的连接，并连接必要的 SDA、SCL 和 GND 线。此外，请记住将外部 DVDD 应用于与所用的 I²C 通信器件兼容的线路。

备注

使用外部 I²C 通信时，如果未断开 SM-USB-DIG，则可能会损坏 SM-USB-DIG 或所连接的任何外部通信器件。

English Document: SBOU126
Copyright © 2026 Texas Instruments Incorporated

2.2.4.4 分流监测器配置及端子块 T3、T5 和 T6

INA3221 通常用于高边采样电阻配置，如 图 2-6 所示。端子块 T3、T5 和 T6 分别表示通道 1、2 和 3 的 V_{IN+}和 V_{IN-}。根据应用的需求，在不对 INA3221EVM 电路板或软件进行任何更改的情况下，可使用上述两种配置中的任何一种。

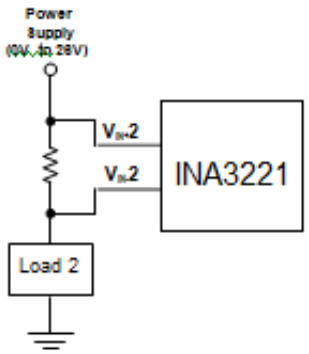

图 2-6. INA3221 分流器配置

2.3 电源要求

2.3.1 电源连接

如图 图 2-7 所示，将 EVM 和 SM-USB-DIG 连接后，连接需要测量的通道。此 V_{IN} 源不包含在套件中，且电压会根据具体的测试要求而有所不同。

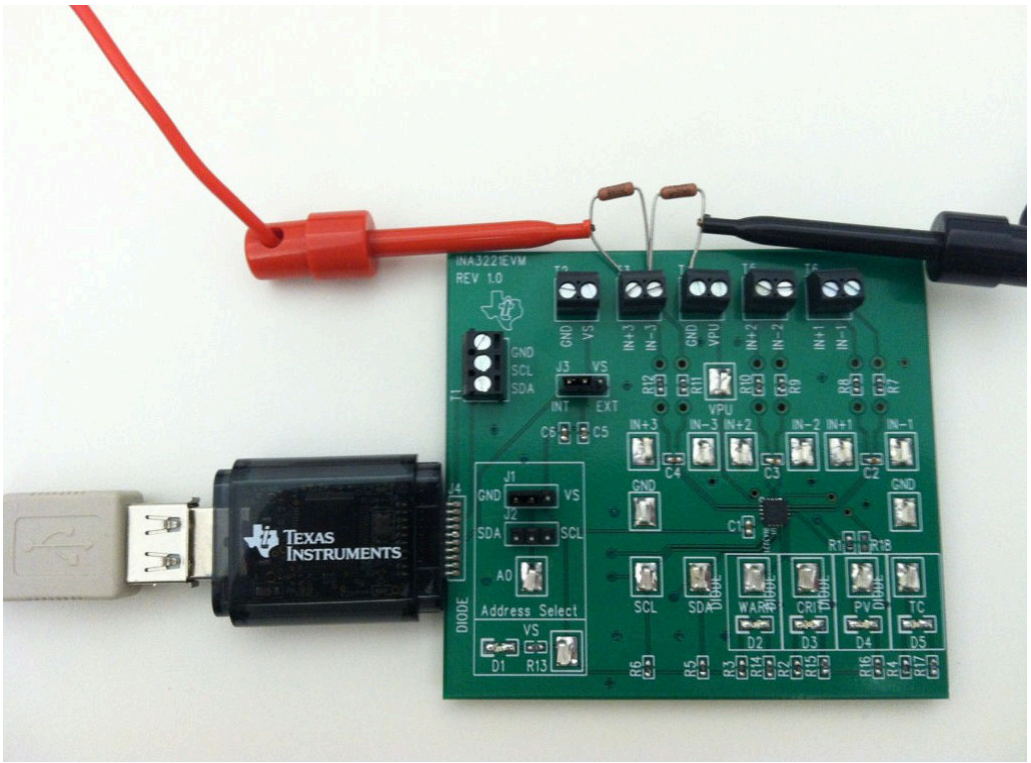

图 2-7. INA3221EVM 典型硬件测试连接

English Document: SBOU126
Copyright © 2026 Texas Instruments Incorporated

2.4 跳线信息

2.4.1 默认跳线设置

INA3221EVM 默认跳线设置 显示了 INA3221EVM 的默认跳线配置。INA3221EVM 电路板上的某些跳线可更改，以匹配特定配置要求。例如，通过配置 J1 和 J2 跳线来设置一个特定的 I²C 地址。

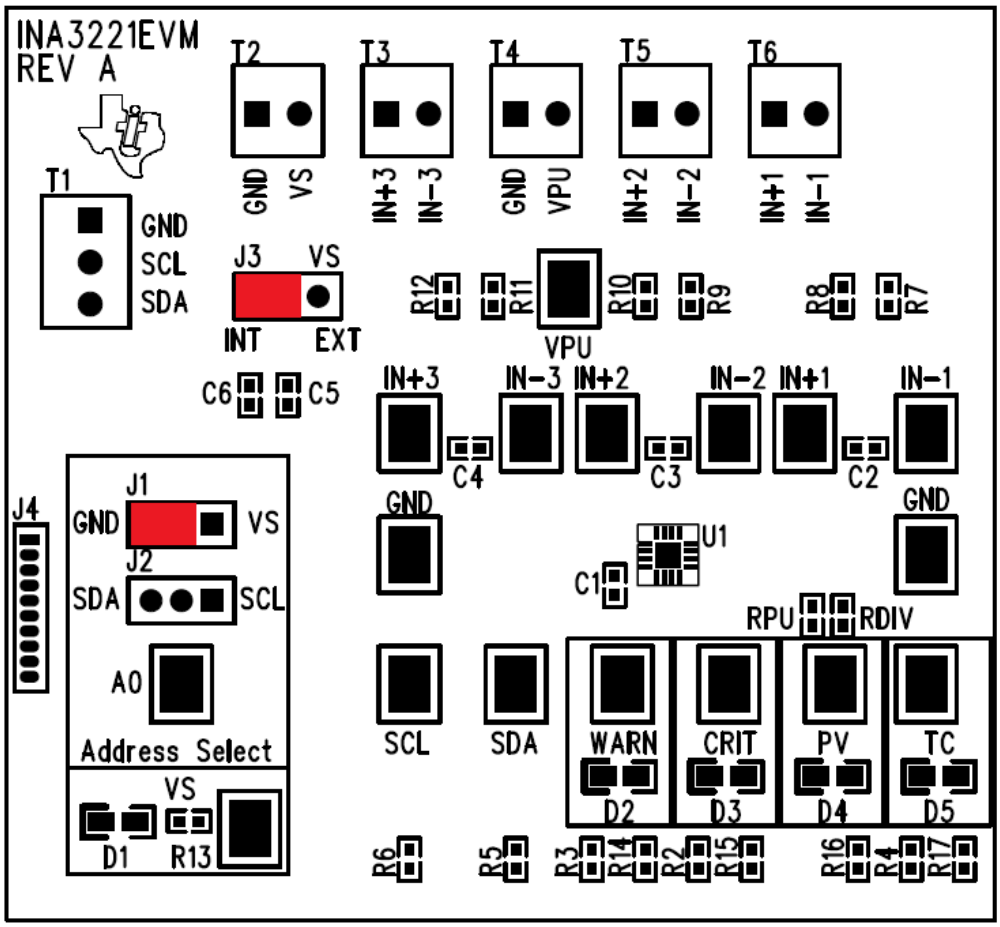

图 2-8. INA3221EVM 默认跳线设置

通常，INA3221EVM 上的跳线 3 设置为 INT 位置。当设置为 INT 位置时，INA3221 电源电压由 SM-USB-DIG 平台生成和控制。当此跳线设置为 EXT 位置时，VS 连接到端子板 T2。

跳线 J1 和 J2 控制 INA3221 I²C 地址引脚。**这些跳线可将地址 (A0) 引脚设置为高、低、SCL 或 SDA。确保每次只连接一根跳线，切勿同时连接两个。**如果跳线未正确连接，可能会导致通信线路短路或中断。更多有关 INA3221 的信息，请参阅 INA3221 产品数据表。

表 2-2 总结了 INA3221 测试板跳线的功能。对于大多数应用，所有跳线都必须保留在相应的默认配置中。

表 2-2. INA3221EVM 测试板跳线功能

跳线	默认值	用途
J1	GND	此跳线用于选择 I²C A0 地址。可以选择四个单独的 I²C 地址，具体取决于 J1 是设置为高电平还是低电平，或者 J2 是设置为 SDA 还是 SCL。
J2	开路	
J3	INT	该跳线用于选择 INA3221 DVDD 引脚是连接至 SM-USB-DIG 平台生成的 V_{DUT} 信号，还是将数字电源引脚连接至 T2 端子，从而允许使用外部电源为数字电路供电。默认 INT 位置会将 DVDD 引脚连接到 V_{DUT} 控制信号。

English Document: SBOU126
Copyright © 2026 Texas Instruments Incorporated

3 软件

3.1 INA3221EVM 软件设置

本节讨论如何安装 INA3221EVM 软件。

3.1.1 INA3221EVM 软件操作系统

INA3221EVM 软件已在具有美国和欧洲区域设置的 Microsoft®Windows® XP 操作系统 (OS) 上进行了测试。该软件的设计还使其能够在其他 Windows 操作系统平台上运行。

English Document: SBOU126
Copyright © 2026 Texas Instruments Incorporated

3.1.2 软件安装

INA3221EVM 软件包含在 EVM 套件随附的 CD 中。您也可以通过 www.ti.com 上的 INA3221EVM 产品文件夹获取该器件。要将软件安装到您的系统中，请将光盘插入可用的 CD-ROM 驱动器。导航至驱动器内容并打开 INA3221EVM 软件文件夹。找到压缩文件 (*INA3221EVM.zip*) 并打开该文件。使用 WinZIP®，或类似的文件压缩程序，将 INA3221EVM 文件解压到硬盘上的特定 INA3221EVM 文件夹中（例如，*C:\INA3221EVM*）。

解压这些文件后，导航至您在硬盘上创建的 INA3221EVM 文件夹。找到 ***setup.exe*** 文件并执行该文件以开始安装。INA3221 软件安装程序文件便会开始安装过程，如 INA3221EVM 软件安装窗口 所示。

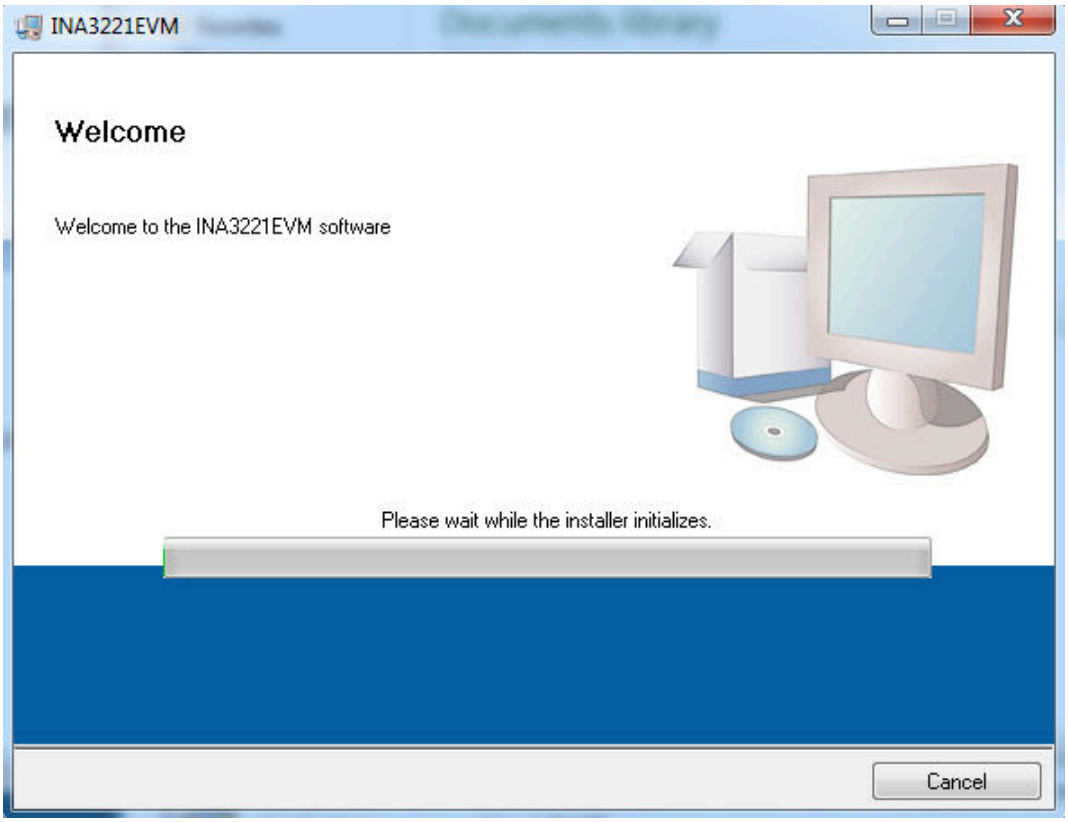

图 3-1. INA3221EVM 软件安装窗口

安装过程初始化后，用户可以选择安装程序的目录；默认位置为 *C:\Program Files\INA3221* 和 *C:\Program Files\National Instruments*。选择相应选项后，系统将显示两个必须接受的许可协议，如 INA3221EVM 许可协议 所示。接受德州仪器 (TI) 和 National Instruments 许可协议后，系统会随即打开进度条并显示安装的软件，请参阅 INA3221EVM 软件安装进度。安装过程完成后，点选 **Finish**。

Copyright © 2026 Texas Instruments Incorporated

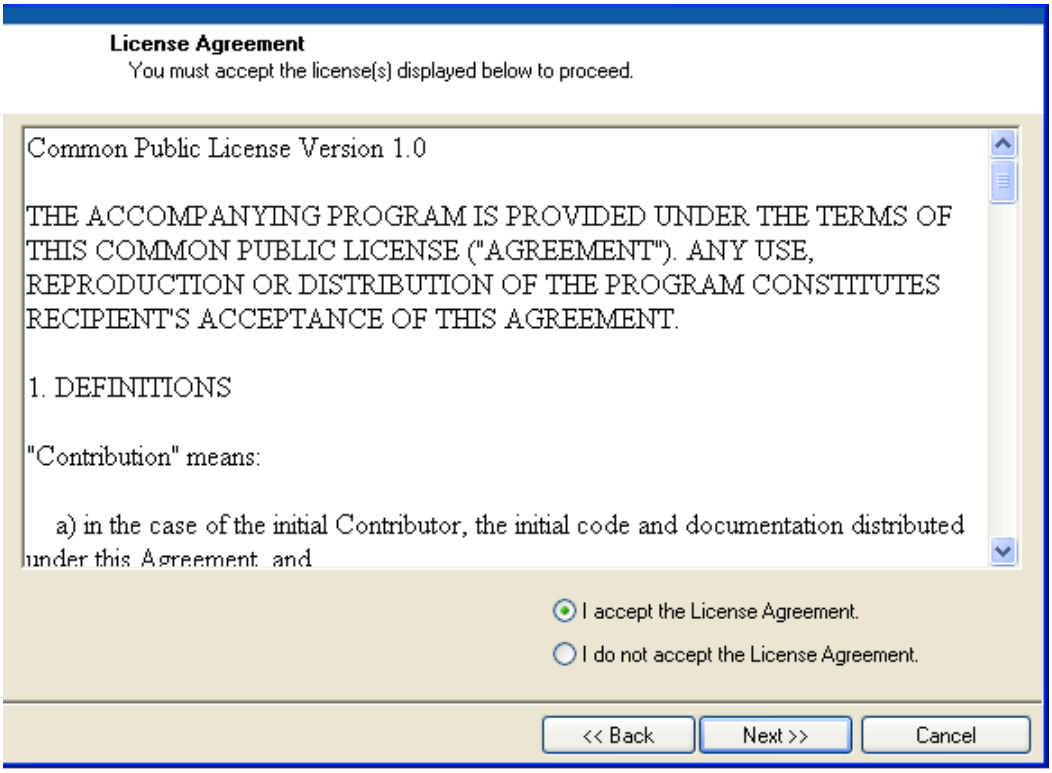

图 3-2. INA3221EVM 许可协议

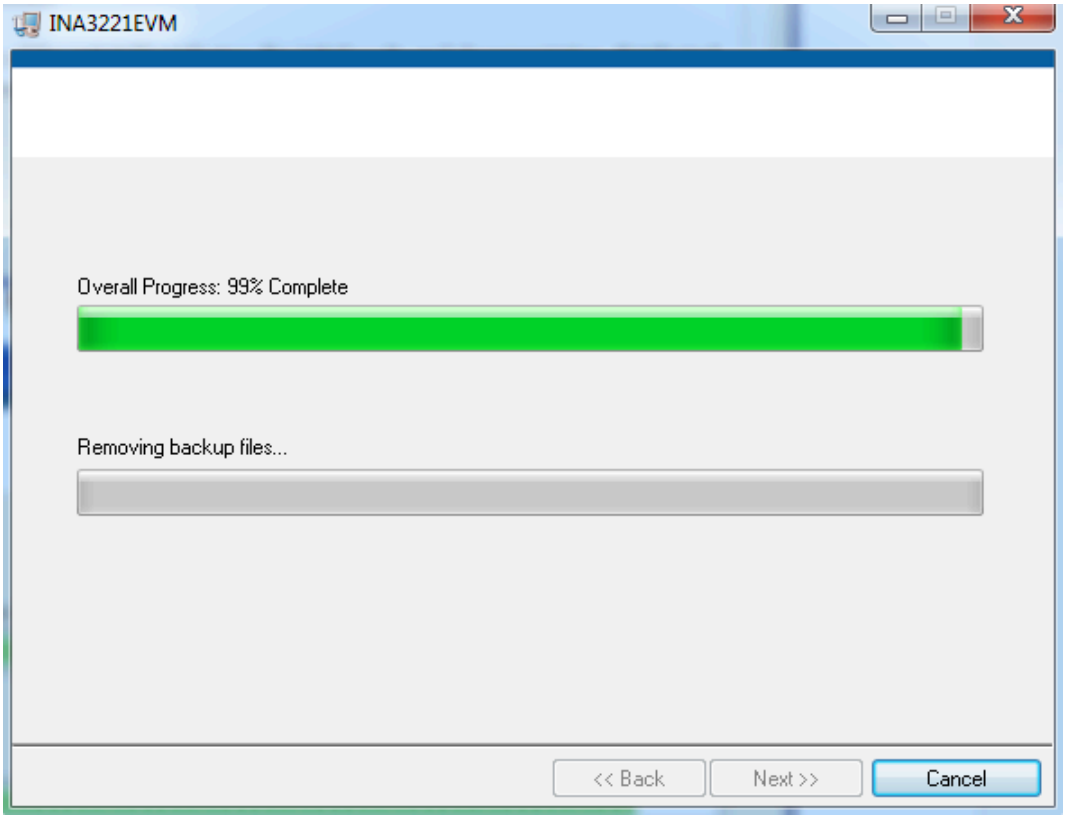

图 3-3. INA3221EVM 软件安装进度

Copyright © 2026 Texas Instruments Incorporated

3.2 INA3221EVM 软件概述

本节讨论如何使用 INA3221EVM 软件。软件操作包含两个步骤：INA3221 配置和操作。

3.2.1 启动 INA3221EVM 软件

INA3221 软件可通过 Windows *开始* 菜单运行。从“开始”中选择*所有程序*，然后选择 *INA3221EVM* 程序。

图 3-4 说明了 INA3221EVM 正常工作时软件会如何显示。

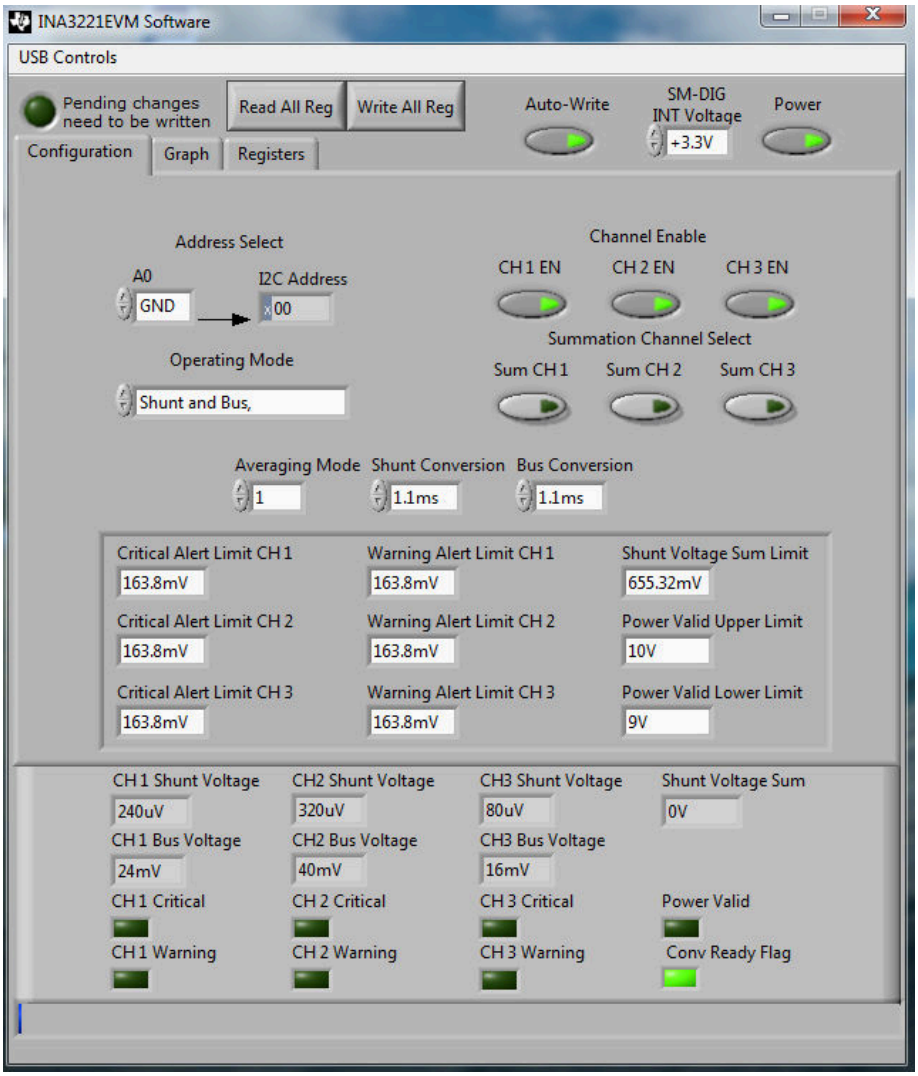

图 3-4. INA3221EVM 软件接口

English Document: SBOU126
Copyright © 2026 Texas Instruments Incorporated

图 3-5 显示了计算机无法与 EVM 通信时弹出的错误窗口。如果您收到此错误，请先确认 USB 线两端是否连接正确。如果在为 SM-USB-DIG 平台通电之前就连接了 USB 线，也可能导致此错误。此错误的另一个可能原因是 PC USB 人机接口器件驱动程序出现问题。确保在插入 USB 电缆时可以识别设备；Windows 生成的确认声音会提示您识别设备。

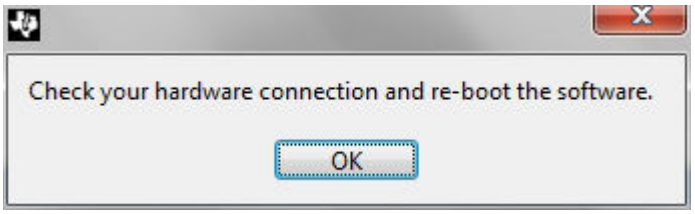

图 3-5. INA3221EVM 软件：与 SM-USB-DIG 平台通信错误

3.2.2 使用 INA3221EVM 软件

本节介绍了器件的基本操作，并提供了介绍图形用户界面 (GUI) 的指南。

3.2.2.1 INA3221 总线电压、分流电压及分流电压和读数条

如 图 3-6 所示，INA3221 软件的底部栏允许用户不断查看 INA3221 器件的状态。每次按下软件顶部的 **Read All Reg** 按钮时，这些值都会更新。除了存储在器件中的寄存器值外，该软件还包含一些标志，用于指示器件何时准备好触发下一次转换，以及临界、警告和电源有效标志何时被触发。

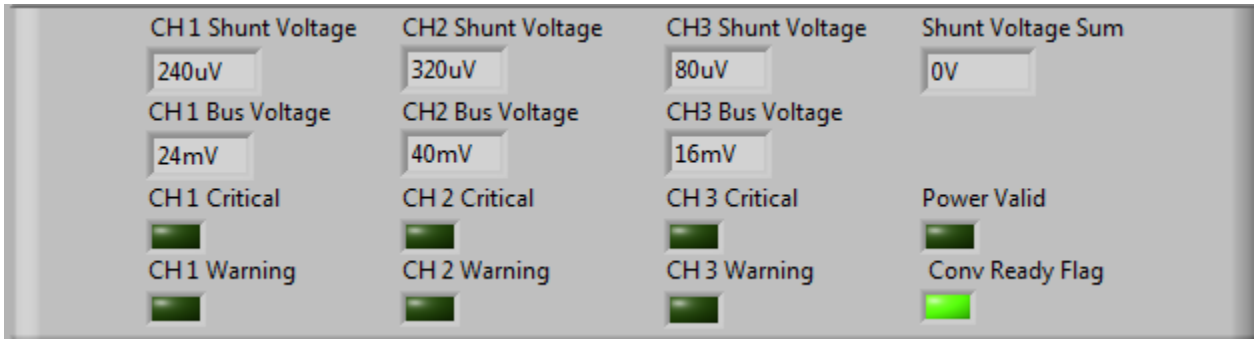

图 3-6. INA3221 结果栏

English Document: SBOU126
Copyright © 2026 Texas Instruments Incorporated

3.2.2.2 寄存器选项卡

寄存器选项卡包含有关内部 INA3221 寄存器的信息。每个寄存器可逐位更改，从而使用户能够完全控制器件，而不仅仅是 GUI 的一般功能。这些功能大部分显示在配置选项卡中，但通过选择相应的寄存器，并点击寄存器选项卡中的**寄存器帮助**按钮，如 图 3-7 所示，可以查阅每个寄存器中各位的具体用途。

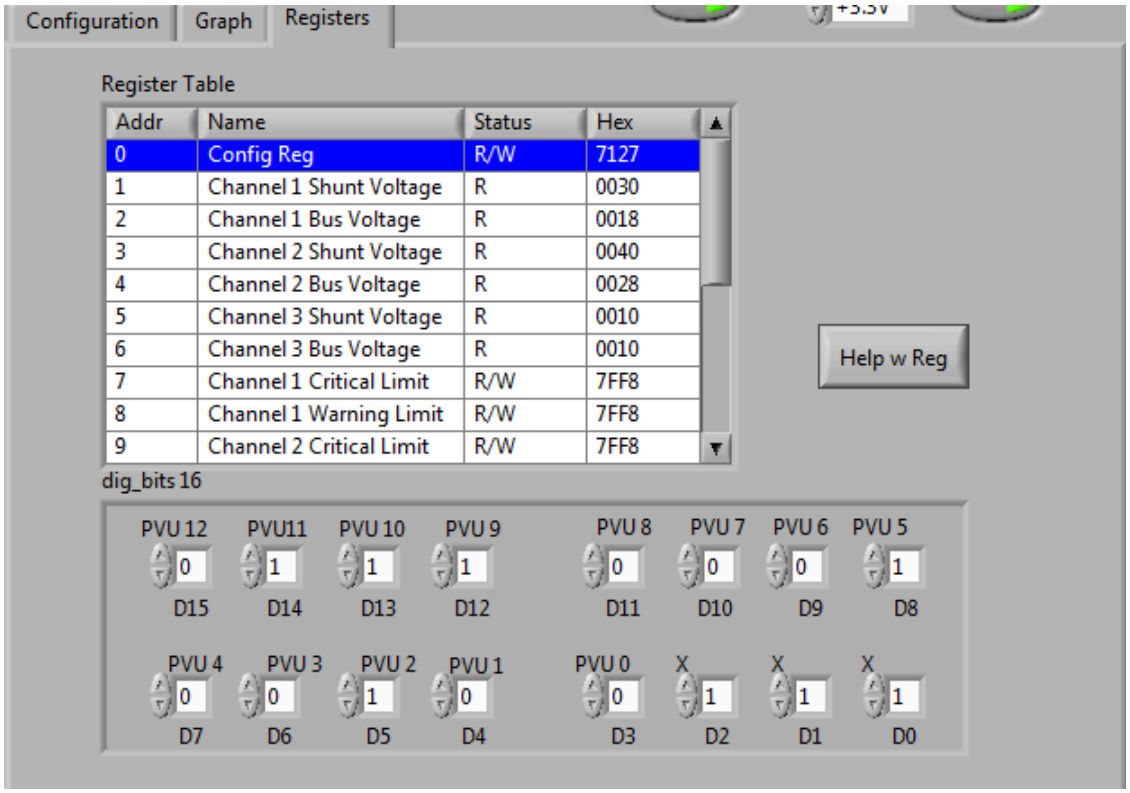

图 3-7. 寄存器选项卡

English Document: SBOU126
Copyright © 2026 Texas Instruments Incorporated

3.2.2.3 图形选项卡

如 图 3-8 所示，“Graph”选项卡包含一个显示 INA3221 上数据随时间变化的绘制窗口。EVM 软件底部的所有七个变量 (CH1V_{SHUNT}, CH2V_{SHUNT}, CH3V_{SHUNT}, CH1V_{BUS}, CH2V_{BUS}, CH3V_{BUS}, and V_{SHUNT} Sum) 可以使用图表正上方的下拉框绘制。选择所需的图后，切换图上方的 **Continuously Poll Data** 按钮开始轮询数据。如果用户希望保存图中的数据，只需选择页面顶部的 *USB Controls* 下拉菜单，然后选择 *Start Graph Log* 选项。选择 *Start Graph Log* 后，系统会提示用户选择数据的存储位置并命名文件。

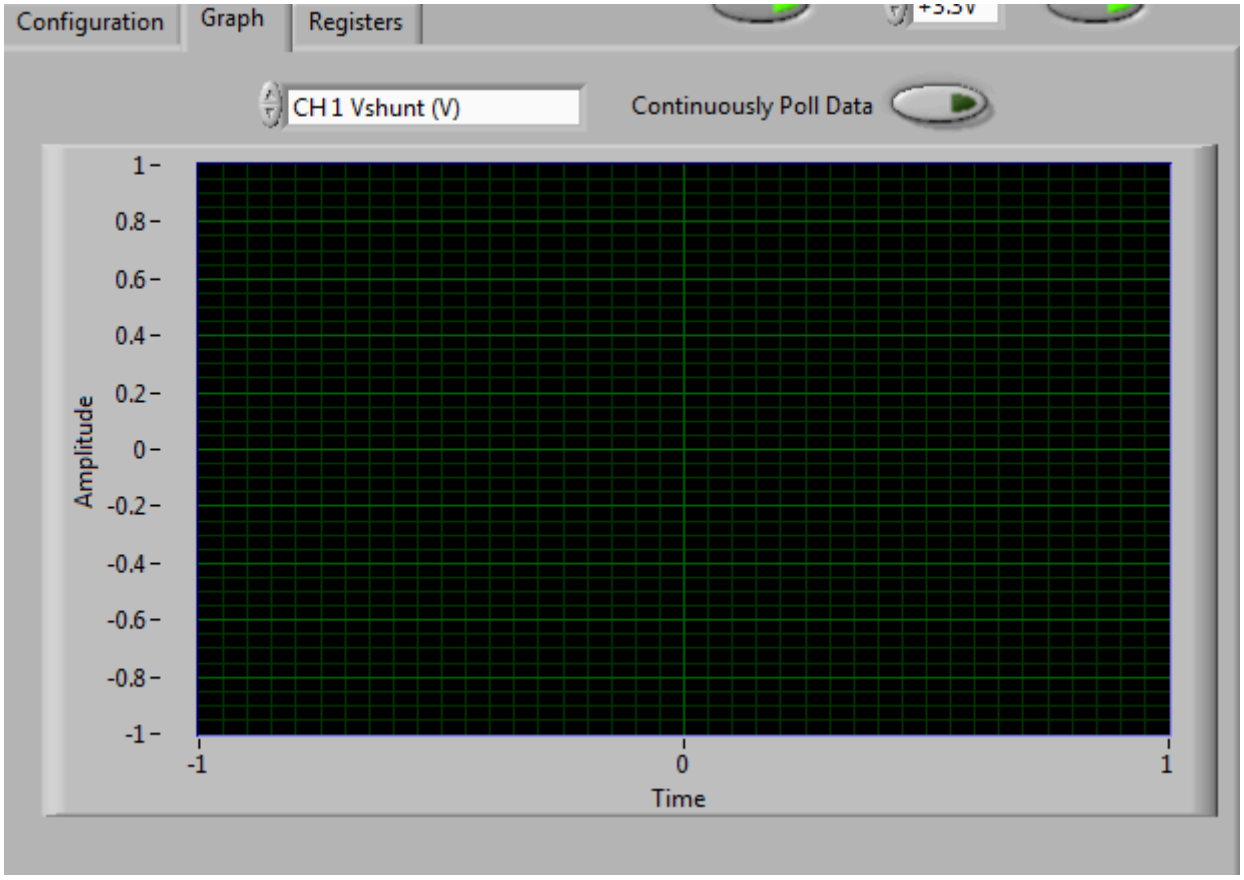

图 3-8. 绘制 INA3221 数据

3.2.2.4 自动写入和 DVDD 电压

INA3221EVM 软件允许自定义由 SM-USB-DIG 调节的板级电压。通过选择 3.3V 或 5V，用户可以指定器件在哪个电压下工作。

该软件还包含“Auto-Write”功能，如 图 3-9 所示，默认会启用该功能。每当发生更改时，此功能都会自动更新寄存器表。启用该功能后，**Write All Registers** 按钮用处不大，仅用作禁用此按钮时的替代方法。



图 3-9. 自动写入、电源按钮和电压控制

Copyright © 2026 Texas Instruments Incorporated

4 硬件设计文件

本节包含 INA3221EVM 的完整物料清单、原理图和 PCB 布局。有关 USB DIG 平台的文档信息，请参阅 *USB DIG 平台用户指南* (SBOU058)，可从 www.ti.com 下载。

4.1 原理图

图 4-1 展示了 INA3221EVM 原理图。

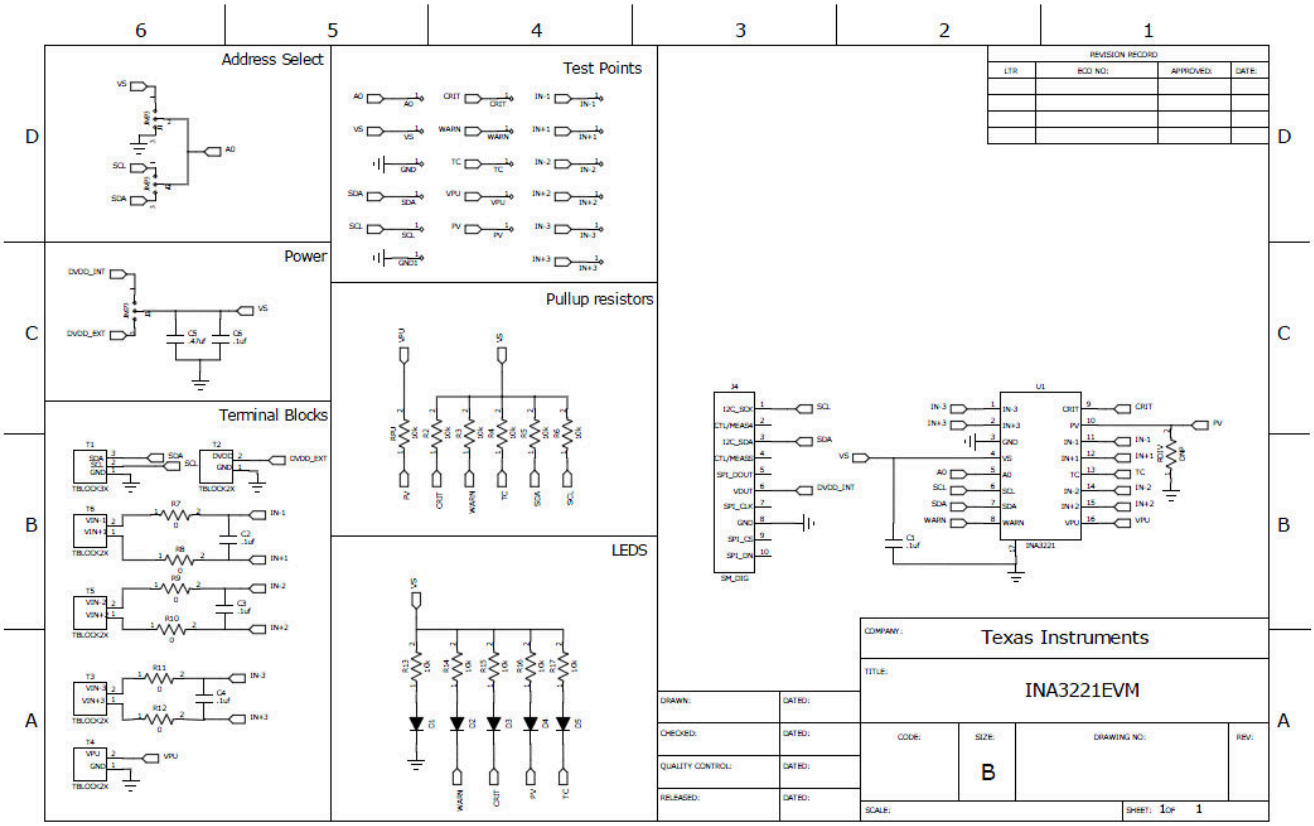

图 4-1. INA3221EVM 原理图

English Document: SBOU126
Copyright © 2026 Texas Instruments Incorporated

4.2 PCB 布局

图 4-2 显示了 INA3221EVM 的 PCB 组件布局。

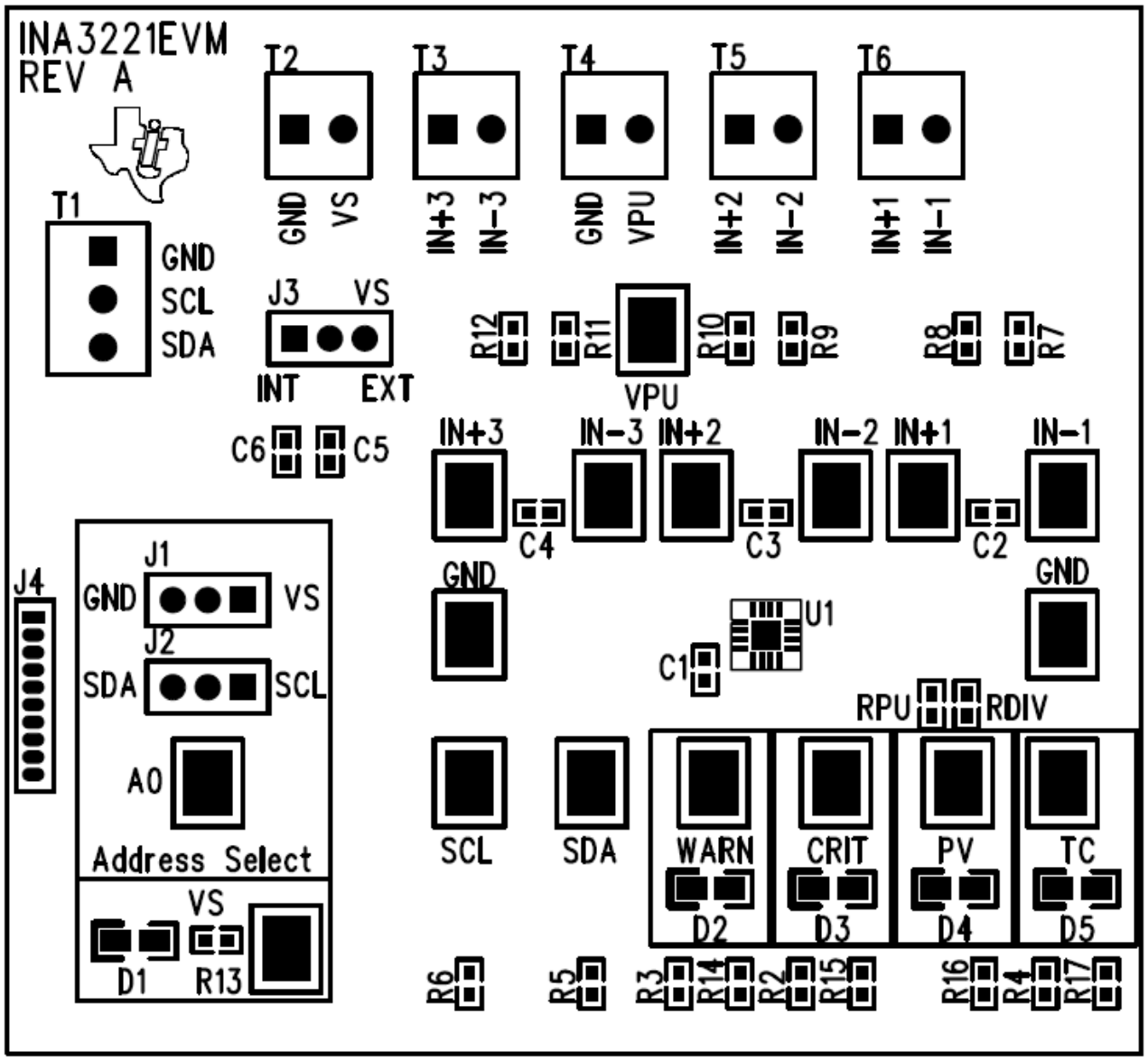

图 4-2. INA3221EVM PCB 顶层（元件侧）

English Document: SBOU126
Copyright © 2026 Texas Instruments Incorporated

4.3 物料清单

表 4-1 列出了 INA3221EVM 物料清单。

表 4-1. 物料清单

项目编号	参考位号	说明	供应商/Mfr	Digi-Key 器件型号	制造商器件型号
1	RPU、R2R6	电阻 10K OHM 1/10W 5% 0603 SMD	Stackpole Electronics	RMCF0603JT10K0CT-ND	RMCF0603JT10K0
2	R13R17	电阻 300 OHM 1/10W 5% 0603 SMD	Panasonic	P300GCT-ND	ERJ-3GEYJ301V
3	R7R12	电阻 0.0 OHM 1/10W 0603 SMD	Stackpole Electronics	RMCF0603ZT0R00CT-ND	RMCF0603ZT0R00
4	RDIV	DNI	—	—	—
5	C5	电容，陶瓷，4.7UF，16V，10% X5R 0603	TDK Corp.	445-7412-2-ND	C1608X7R1V474K
6	C1C4、C6	电容，陶瓷，10UF 25V X7R 10% 0603	TDK Corp.	445-1316-1-ND	C1608X7R1E104K
7	D1D5	LED 绿光广角 0603 SMD	Panasonic	P14140CT-ND	LNJ3W0C83RA
8	U1	INA3221	德州仪器 (TI)	—	—
9	所有跳线	CONN HEADER 50POS 0.100" SGL 金色	Samtec	SAM1029-50-ND	TSW-150-07G-S
10	J3、J1	带手柄 2 位置 30AU 的分路器 LP	Tyco Electronics	A26242-ND	881545-2
11	所有测试点	PC 测试点紧凑型 SMT	Keystone Electronics	5016KCT-ND	5016
12	T1	3 块 3.5mm 端子	On-Shore Technology Inc	ED1515-ND	ED555/3DS
13	T2T6	2 块 3.5mm 端子	On-Shore Technology Inc	ED1514-ND	ED555/2DS
14	Bumpons	BUMPON 半球形 .50 X .14 透明	3M	SJ5312-7-ND	SJ-5312 (CLEAR)
15	J4	CONN 插座 RT ANG 1POS .050	Mill-Max Manufacturing	ED8850-ND	851-93-10-20-001000

English Document: SBOU126
Copyright © 2026 Texas Instruments Incorporated

5 相关文档

以下文档提供了有关 INA3221EVM 组装中使用的德州仪器 (TI) 集成电路的信息。本用户指南可从 www.ti.com 网站上获得，文献编号为 SBOU126。附加到文献编号的任何字母对应于撰写本文档时已有的最新文档修订版。较新的修订版可从 www.ti.com 上获得，也可从德州仪器 (TI) 文献响应中心（电话为 (800) 477-8924）或产品信息中心（电话为 (972) 644-5580）获得。订购时，可通过文档标题或文献编号识别文档。

表 5-1. 相关文档

文档	文献编号
INA3221 产品数据表	SBOS576
SM-USB-DIG 平台用户指南	SBOU098
USB DIG 平台用户指南	SBOU058

6 修订历史记录

注：以前版本的页码可能与当前版本的页码不同

Changes from Revision * (April 2012) to Revision A (October 2026) **Page**

- 更新了整个文档中的表格、图和交叉参考的编号格式 1
- 更新了文档标题以符合系列约定 1
- 将首页描述更改为*描述* 部分 2
- 将*概述* 部分改为*器件信息* 部分 3
- 将 *INA3221EVM 文档* 部分改为*硬件设计文件* 部分 17

English Document: SBOU126
Copyright © 2026 Texas Instruments Incorporated

STANDARD TERMS FOR EVALUATION MODULES

1. *Delivery:* TI delivers TI evaluation boards, kits, or modules, including any accompanying demonstration software, components, and/or documentation which may be provided together or separately (collectively, an “EVM” or “EVMs”) to the User (“User”) in accordance with the terms set forth herein. User's acceptance of the EVM is expressly subject to the following terms.

   1.1 EVMs are intended solely for product or software developers for use in a research and development setting to facilitate feasibility evaluation, experimentation, or scientific analysis of TI semiconductors products. EVMs have no direct function and are not finished products. EVMs shall not be directly or indirectly assembled as a part or subassembly in any finished product. For clarification, any software or software tools provided with the EVM (“Software”) shall not be subject to the terms and conditions set forth herein but rather shall be subject to the applicable terms that accompany such Software

   1.2 EVMs are not intended for consumer or household use. EVMs may not be sold, sublicensed, leased, rented, loaned, assigned, or otherwise distributed for commercial purposes by Users, in whole or in part, or used in any finished product or production system.

2 *Limited Warranty and Related Remedies/Disclaimers*:

   2.1 These terms do not apply to Software. The warranty, if any, for Software is covered in the applicable Software License Agreement.

   2.2 TI warrants that the TI EVM will conform to TI's published specifications for ninety (90) days after the date TI delivers such EVM to User. Notwithstanding the foregoing, TI shall not be liable for a nonconforming EVM if (a) the nonconformity was caused by neglect, misuse or mistreatment by an entity other than TI, including improper installation or testing, or for any EVMs that have been altered or modified in any way by an entity other than TI, (b) the nonconformity resulted from User's design, specifications or instructions for such EVMs or improper system design, or (c) User has not paid on time. Testing and other quality control techniques are used to the extent TI deems necessary. TI does not test all parameters of each EVM. User's claims against TI under this Section 2 are void if User fails to notify TI of any apparent defects in the EVMs within ten (10) business days after delivery, or of any hidden defects with ten (10) business days after the defect has been detected.

   2.3 TI's sole liability shall be at its option to repair or replace EVMs that fail to conform to the warranty set forth above, or credit User's account for such EVM. TI's liability under this warranty shall be limited to EVMs that are returned during the warranty period to the address designated by TI and that are determined by TI not to conform to such warranty. If TI elects to repair or replace such EVM, TI shall have a reasonable time to repair such EVM or provide replacements. Repaired EVMs shall be warranted for the remainder of the original warranty period. Replaced EVMs shall be warranted for a new full ninety (90) day warranty period.

WARNING

Evaluation Kits are intended solely for use by technically qualified, professional electronics experts who are familiar with the dangers and application risks associated with handling electrical mechanical components, systems, and subsystems.

User shall operate the Evaluation Kit within TI’s recommended guidelines and any applicable legal or environmental requirements as well as reasonable and customary safeguards. Failure to set up and/or operate the Evaluation Kit within TI’s recommended guidelines may result in personal injury or death or property damage. Proper set up entails following TI’s instructions for electrical ratings of interface circuits such as input, output and electrical loads.

NOTE:

EXPOSURE TO ELECTROSTATIC DISCHARGE (ESD) MAY CAUSE DEGREDATION OR FAILURE OF THE EVALUATION KIT; TI RECOMMENDS STORAGE OF THE EVALUATION KIT IN A PROTECTIVE ESD BAG.

3 *Regulatory Notices:*

3.1 *United States*

3.1.1 *Notice applicable to EVMs not FCC-Approved:*

FCC NOTICE: This kit is designed to allow product developers to evaluate electronic components, circuitry, or software associated with the kit to determine whether to incorporate such items in a finished product and software developers to write software applications for use with the end product. This kit is not a finished product and when assembled may not be resold or otherwise marketed unless all required FCC equipment authorizations are first obtained. Operation is subject to the condition that this product not cause harmful interference to licensed radio stations and that this product accept harmful interference. Unless the assembled kit is designed to operate under part 15, part 18 or part 95 of this chapter, the operator of the kit must operate under the authority of an FCC license holder or must secure an experimental authorization under part 5 of this chapter.

3.1.2 *For EVMs annotated as FCC – FEDERAL COMMUNICATIONS COMMISSION Part 15 Compliant:*

CAUTION

This device complies with part 15 of the FCC Rules. Operation is subject to the following two conditions: (1) This device may not cause harmful interference, and (2) this device must accept any interference received, including interference that may cause undesired operation.

Changes or modifications not expressly approved by the party responsible for compliance could void the user's authority to operate the equipment.

FCC Interference Statement for Class A EVM devices

NOTE: This equipment has been tested and found to comply with the limits for a Class A digital device, pursuant to part 15 of the FCC Rules. These limits are designed to provide reasonable protection against harmful interference when the equipment is operated in a commercial environment. This equipment generates, uses, and can radiate radio frequency energy and, if not installed and used in accordance with the instruction manual, may cause harmful interference to radio communications. Operation of this equipment in a residential area is likely to cause harmful interference in which case the user will be required to correct the interference at his own expense.

FCC Interference Statement for Class B EVM devices

NOTE: This equipment has been tested and found to comply with the limits for a Class B digital device, pursuant to part 15 of the FCC Rules. These limits are designed to provide reasonable protection against harmful interference in a residential installation. This equipment generates, uses and can radiate radio frequency energy and, if not installed and used in accordance with the instructions, may cause harmful interference to radio communications. However, there is no guarantee that interference will not occur in a particular installation. If this equipment does cause harmful interference to radio or television reception, which can be determined by turning the equipment off and on, the user is encouraged to try to correct the interference by one or more of the following measures:

- *Reorient or relocate the receiving antenna.*
- *Increase the separation between the equipment and receiver.*
- *Connect the equipment into an outlet on a circuit different from that to which the receiver is connected.*
- *Consult the dealer or an experienced radio/TV technician for help.*

3.2 *Canada*

3.2.1 *For EVMs issued with an Industry Canada Certificate of Conformance to RSS-210 or RSS-247*

Concerning EVMs Including Radio Transmitters:

This device complies with Industry Canada license-exempt RSSs. Operation is subject to the following two conditions:

(1) this device may not cause interference, and (2) this device must accept any interference, including interference that may cause undesired operation of the device.

Concernant les EVMs avec appareils radio:

Le présent appareil est conforme aux CNR d'Industrie Canada applicables aux appareils radio exempts de licence. L'exploitation est autorisée aux deux conditions suivantes: (1) l'appareil ne doit pas produire de brouillage, et (2) l'utilisateur de l'appareil doit accepter tout brouillage radioélectrique subi, même si le brouillage est susceptible d'en compromettre le fonctionnement.

Concerning EVMs Including Detachable Antennas:

Under Industry Canada regulations, this radio transmitter may only operate using an antenna of a type and maximum (or lesser) gain approved for the transmitter by Industry Canada. To reduce potential radio interference to other users, the antenna type and its gain should be so chosen that the equivalent isotropically radiated power (e.i.r.p.) is not more than that necessary for successful communication. This radio transmitter has been approved by Industry Canada to operate with the antenna types listed in the user guide with the maximum permissible gain and required antenna impedance for each antenna type indicated. Antenna types not included in this list, having a gain greater than the maximum gain indicated for that type, are strictly prohibited for use with this device.

Concernant les EVMs avec antennes détachables

Conformément à la réglementation d'Industrie Canada, le présent émetteur radio peut fonctionner avec une antenne d'un type et d'un gain maximal (ou inférieur) approuvé pour l'émetteur par Industrie Canada. Dans le but de réduire les risques de brouillage radioélectrique à l'intention des autres utilisateurs, il faut choisir le type d'antenne et son gain de sorte que la puissance isotrope rayonnée équivalente (p.i.r.e.) ne dépasse pas l'intensité nécessaire à l'établissement d'une communication satisfaisante. Le présent émetteur radio a été approuvé par Industrie Canada pour fonctionner avec les types d'antenne énumérés dans le manuel d'usage et ayant un gain admissible maximal et l'impédance requise pour chaque type d'antenne. Les types d'antenne non inclus dans cette liste, ou dont le gain est supérieur au gain maximal indiqué, sont strictement interdits pour l'exploitation de l'émetteur

3.3 *Japan*

3.3.1 *Notice for EVMs delivered in Japan:* Please see http://www.tij.co.jp/lsds/ti_ja/general/eStore/notice_01.page 日本国内に輸入される評価用キット、ボードについては、次のところをご覧ください。

https://www.ti.com/ja-jp/legal/notice-for-evaluation-kits-delivered-in-japan.html

3.3.2 *Notice for Users of EVMs Considered "Radio Frequency Products" in Japan:* EVMs entering Japan may not be certified by TI as conforming to Technical Regulations of Radio Law of Japan.

If User uses EVMs in Japan, not certified to Technical Regulations of Radio Law of Japan, User is required to follow the instructions set forth by Radio Law of Japan, which includes, but is not limited to, the instructions below with respect to EVMs (which for the avoidance of doubt are stated strictly for convenience and should be verified by User):

1. Use EVMs in a shielded room or any other test facility as defined in the notification #173 issued by Ministry of Internal Affairs and Communications on March 28, 2006, based on Sub-section 1.1 of Article 6 of the Ministry's Rule for Enforcement of Radio Law of Japan,
2. Use EVMs only after User obtains the license of Test Radio Station as provided in Radio Law of Japan with respect to EVMs, or
3. Use of EVMs only after User obtains the Technical Regulations Conformity Certification as provided in Radio Law of Japan with respect to EVMs. Also, do not transfer EVMs, unless User gives the same notice above to the transferee. Please note that if User does not follow the instructions above, User will be subject to penalties of Radio Law of Japan.

【無線電波を送信する製品の開発キットをお使いになる際の注意事項】 開発キットの中には技術基準適合証明を受けていないものがあります。 技術適合証明を受けていないもののご使用に際しては、電波法遵守のため、以下のいずれかの措置を取っていただく必要がありますのでご注意ください。

1. 電波法施行規則第6条第1項第1号に基づく平成18年3月28日総務省告示第173号で定められた電波暗室等の試験設備でご使用いただく。
2. 実験局の免許を取得後ご使用いただく。
3. 技術基準適合証明を取得後ご使用いただく。

なお、本製品は、上記の「ご使用にあたっての注意」を譲渡先、移転先に通知しない限り、譲渡、移転できないものとします。

上記を遵守頂けない場合は、電波法の罰則が適用される可能性があることをご留意ください。 日本テキサス・インスツルメンツ株式会社

東京都新宿区西新宿 6 丁目 2 4 番 1 号

西新宿三井ビル

3.3.3 *Notice for EVMs for Power Line Communication:* Please see http://www.tij.co.jp/lsds/ti_ja/general/eStore/notice_02.page

電力線搬送波通信についての開発キットをお使いになる際の注意事項については、次のところをご覧ください。https://www.ti.com/ja-jp/legal/notice-for-evaluation-kits-for-power-line-communication.html

3.4 *European Union*

3.4.1 *For EVMs subject to EU Directive 2014/30/EU (Electromagnetic Compatibility Directive)*:

This is a class A product intended for use in environments other than domestic environments that are connected to a low-voltage power-supply network that supplies buildings used for domestic purposes. In a domestic environment this product may cause radio interference in which case the user may be required to take adequate measures.

4 *EVM Use Restrictions and Warnings:*

4.1 EVMS ARE NOT FOR USE IN FUNCTIONAL SAFETY AND/OR SAFETY CRITICAL EVALUATIONS, INCLUDING BUT NOT LIMITED TO EVALUATIONS OF LIFE SUPPORT APPLICATIONS.

4.2 User must read and apply the user guide and other available documentation provided by TI regarding the EVM prior to handling or using the EVM, including without limitation any warning or restriction notices. The notices contain important safety information related to, for example, temperatures and voltages.

4.3 *Safety-Related Warnings and Restrictions:*

4.3.1 User shall operate the EVM within TI's recommended specifications and environmental considerations stated in the user guide, other available documentation provided by TI, and any other applicable requirements and employ reasonable and customary safeguards. Exceeding the specified performance ratings and specifications (including but not limited to input and output voltage, current, power, and environmental ranges) for the EVM may cause personal injury or death, or property damage. If there are questions concerning performance ratings and specifications, User should contact a TI field representative prior to connecting interface electronics including input power and intended loads. Any loads applied outside of the specified output range may also result in unintended and/or inaccurate operation and/or possible permanent damage to the EVM and/or interface electronics. Please consult the EVM user guide prior to connecting any load to the EVM output. If there is uncertainty as to the load specification, please contact a TI field representative. During normal operation, even with the inputs and outputs kept within the specified allowable ranges, some circuit components may have elevated case temperatures. These components include but are not limited to linear regulators, switching transistors, pass transistors, current sense resistors, and heat sinks, which can be identified using the information in the associated documentation. When working with the EVM, please be aware that the EVM may become very warm.

4.3.2 EVMs are intended solely for use by technically qualified, professional electronics experts who are familiar with the dangers and application risks associated with handling electrical mechanical components, systems, and subsystems. User assumes all responsibility and liability for proper and safe handling and use of the EVM by User or its employees, affiliates, contractors or designees. User assumes all responsibility and liability to ensure that any interfaces (electronic and/or mechanical) between the EVM and any human body are designed with suitable isolation and means to safely limit accessible leakage currents to minimize the risk of electrical shock hazard. User assumes all responsibility and liability for any improper or unsafe handling or use of the EVM by User or its employees, affiliates, contractors or designees.

4.4 User assumes all responsibility and liability to determine whether the EVM is subject to any applicable international, federal, state, or local laws and regulations related to User's handling and use of the EVM and, if applicable, User assumes all responsibility and liability for compliance in all respects with such laws and regulations. User assumes all responsibility and liability for proper disposal and recycling of the EVM consistent with all applicable international, federal, state, and local requirements.

5. *Accuracy of Information:* To the extent TI provides information on the availability and function of EVMs, TI attempts to be as accurate as possible. However, TI does not warrant the accuracy of EVM descriptions, EVM availability or other information on its websites as accurate, complete, reliable, current, or error-free.

6. *Disclaimers:*

6.1 EXCEPT AS SET FORTH ABOVE, EVMS AND ANY MATERIALS PROVIDED WITH THE EVM (INCLUDING, BUT NOT LIMITED TO, REFERENCE DESIGNS AND THE DESIGN OF THE EVM ITSELF) ARE PROVIDED "AS IS" AND "WITH ALL FAULTS." TI DISCLAIMS ALL OTHER WARRANTIES, EXPRESS OR IMPLIED, REGARDING SUCH ITEMS, INCLUDING BUT NOT LIMITED TO ANY EPIDEMIC FAILURE WARRANTY OR IMPLIED WARRANTIES OF MERCHANTABILITY OR FITNESS FOR A PARTICULAR PURPOSE OR NON-INFRINGEMENT OF ANY THIRD PARTY PATENTS, COPYRIGHTS, TRADE SECRETS OR OTHER INTELLECTUAL PROPERTY RIGHTS.

6.2 EXCEPT FOR THE LIMITED RIGHT TO USE THE EVM SET FORTH HEREIN, NOTHING IN THESE TERMS SHALL BE CONSTRUED AS GRANTING OR CONFERRING ANY RIGHTS BY LICENSE, PATENT, OR ANY OTHER INDUSTRIAL OR INTELLECTUAL PROPERTY RIGHT OF TI, ITS SUPPLIERS/LICENSORS OR ANY OTHER THIRD PARTY, TO USE THE EVM IN ANY FINISHED END-USER OR READY-TO-USE FINAL PRODUCT, OR FOR ANY INVENTION, DISCOVERY OR IMPROVEMENT, REGARDLESS OF WHEN MADE, CONCEIVED OR ACQUIRED.

7. *USER'S INDEMNITY OBLIGATIONS AND REPRESENTATIONS.* USER WILL DEFEND, INDEMNIFY AND HOLD TI, ITS LICENSORS AND THEIR REPRESENTATIVES HARMLESS FROM AND AGAINST ANY AND ALL CLAIMS, DAMAGES, LOSSES, EXPENSES, COSTS AND LIABILITIES (COLLECTIVELY, "CLAIMS") ARISING OUT OF OR IN CONNECTION WITH ANY HANDLING OR USE OF THE EVM THAT IS NOT IN ACCORDANCE WITH THESE TERMS. THIS OBLIGATION SHALL APPLY WHETHER CLAIMS ARISE UNDER STATUTE, REGULATION, OR THE LAW OF TORT, CONTRACT OR ANY OTHER LEGAL THEORY, AND EVEN IF THE EVM FAILS TO PERFORM AS DESCRIBED OR EXPECTED.

8. *Limitations on Damages and Liability:*

   8.1 *General Limitations*. IN NO EVENT SHALL TI BE LIABLE FOR ANY SPECIAL, COLLATERAL, INDIRECT, PUNITIVE, INCIDENTAL, CONSEQUENTIAL, OR EXEMPLARY DAMAGES IN CONNECTION WITH OR ARISING OUT OF THESE TERMS OR THE USE OF THE EVMS , REGARDLESS OF WHETHER TI HAS BEEN ADVISED OF THE POSSIBILITY OF SUCH DAMAGES. EXCLUDED DAMAGES INCLUDE, BUT ARE NOT LIMITED TO, COST OF REMOVAL OR REINSTALLATION, ANCILLARY COSTS TO THE PROCUREMENT OF SUBSTITUTE GOODS OR SERVICES, RETESTING, OUTSIDE COMPUTER TIME, LABOR COSTS, LOSS OF GOODWILL, LOSS OF PROFITS, LOSS OF SAVINGS, LOSS OF USE, LOSS OF DATA, OR BUSINESS INTERRUPTION. NO CLAIM, SUIT OR ACTION SHALL BE BROUGHT AGAINST TI MORE THAN TWELVE (12) MONTHS AFTER THE EVENT THAT GAVE RISE TO THE CAUSE OF ACTION HAS OCCURRED.

   8.2 *Specific Limitations.* IN NO EVENT SHALL TI'S AGGREGATE LIABILITY FROM ANY USE OF AN EVM PROVIDED HEREUNDER, INCLUDING FROM ANY WARRANTY, INDEMITY OR OTHER OBLIGATION ARISING OUT OF OR IN CONNECTION WITH THESE TERMS, , EXCEED THE TOTAL AMOUNT PAID TO TI BY USER FOR THE PARTICULAR EVM(S) AT ISSUE DURING THE PRIOR TWELVE (12) MONTHS WITH RESPECT TO WHICH LOSSES OR DAMAGES ARE CLAIMED. THE EXISTENCE OF MORE THAN ONE CLAIM SHALL NOT ENLARGE OR EXTEND THIS LIMIT.

9. *Return Policy.* Except as otherwise provided, TI does not offer any refunds, returns, or exchanges. Furthermore, no return of EVM(s) will be accepted if the package has been opened and no return of the EVM(s) will be accepted if they are damaged or otherwise not in a resalable condition. If User feels it has been incorrectly charged for the EVM(s) it ordered or that delivery violates the applicable order, User should contact TI. All refunds will be made in full within thirty (30) working days from the return of the components(s), excluding any postage or packaging costs.

10. *Governing Law:* These terms and conditions shall be governed by and interpreted in accordance with the laws of the State of Texas, without reference to conflict-of-laws principles. User agrees that non-exclusive jurisdiction for any dispute arising out of or relating to these terms and conditions lies within courts located in the State of Texas and consents to venue in Dallas County, Texas. Notwithstanding the foregoing, any judgment may be enforced in any United States or foreign court, and TI may seek injunctive relief in any United States or foreign court.

Mailing Address: Texas Instruments, Post Office Box 655303, Dallas, Texas 75265
Copyright © 2023, Texas Instruments Incorporated

重要通知和免责声明

TI“按原样”提供技术和可靠性数据（包括数据表）、设计资源（包括参考设计）、应用或其他设计建议、网络工具、安全信息和其他资源，不保证没有瑕疵且不做出任何明示或暗示的担保，包括但不限于对适销性、与某特定用途的适用性或不侵犯任何第三方知识产权的暗示担保。

这些资源可供使用 TI 产品进行设计的熟练开发人员使用。您将自行承担以下全部责任：(1) 针对您的应用选择合适的 TI 产品，(2) 设计、验证并测试您的应用，(3) 确保您的应用满足相应标准以及任何其他安全、安保法规或其他要求。

这些资源如有变更，恕不另行通知。TI 授权您仅可将这些资源用于研发本资源所述的 TI 产品的相关应用。严禁以其他方式对这些资源进行复制或展示。您无权使用任何其他 TI 知识产权或任何第三方知识产权。对于因您对这些资源的使用而对 TI 及其代表造成的任何索赔、损害、成本、损失和债务，您将全额赔偿，TI 对此概不负责。

TI 提供的产品受 TI 销售条款)、TI 通用质量指南 或 ti.com 上其他适用条款或 TI 产品随附的其他适用条款的约束。TI 提供这些资源并不会扩展或以其他方式更改 TI 针对 TI 产品发布的适用的担保或担保免责声明。 除非德州仪器 (TI) 明确将某产品指定为定制产品或客户特定产品，否则其产品均为按确定价格收入目录的标准通用器件。

TI 反对并拒绝您可能提出的任何其他或不同的条款。

版权所有 © 2026，德州仪器 (TI) 公司

最后更新日期：2025 年 10 月